UNITED STATES PATENT AND TRADEMARK OFFICE

COMMISSIONER FOR PATENTS
UNITED STATES PATENT AND TRADEMARK OFFICE
P.O. BOX 1450
ALEXANDRIA, VA 22313-1450
www.uspto.gov

Steven L. Highlander
FULBRIGHT & JAWORSKI L.L.P.
Suite 2400
600 Congress Avenue
Austin, TX 78701

COPY MAILED
SEP 27 2006
OFFICE OF PETITIONS

In re Application of	:
Reimer, et al.	: DECISION ON PETITION
Application No. 10/610,022	:
Filed: June 30, 2003	:
Docket No.: ILEX:055USD1	:

This is a decision on the petition to withdraw the holding of abandonment under 37 CFR 1.181, filed July 10, 2006.

This application was held abandoned for failure to timely submit a proper reply to the Office communication mailed July 5, 2005. Notice of Abandonment was mailed January 11, 2006.

Petitioners assert that a response to the Office communication and a petition for five month extension of time were timely submitted on January 5, 2006, and has submitted as proof of USPTO receipt of the reply a return postcard dated stamped January 9, 2006 along with a copy of the response bearing a certificate of mailing date of January 5, 2006.

The original response submitted January 9, 2006 has been located. In view thereof, the petition to withdraw the holding of abandonment is hereby **GRANTED**.

The Notice of Abandonment is hereby **VACATED** and the holding of abandonment is **WITHDRAWN**.

The application file is being forwarded to Technology Center 1600 for further processing.

Telephone inquiries concerning this matter may be directed to the undersigned at (571) 272-3205.

Alesia M. Brown
Petitions Attorney
Office of Petitions

UNITED STATES PATENT AND TRADEMARK OFFICE

Commissioner for Patents
United States Patent and Trademark Office
P.O. Box 1450
Alexandria, VA 22313-1450
www.uspto.gov

MAILED
FROM DIRECTORS OFFICE
JUN 11 2007
TECHNOLOGY CENTER 3600

H. Duane Switzer
Jones Day
North Point
901 Lakeside Avenue
Cleveland, OH 44114-1190

In re Application of Michael C. Keiper Application No. 10/610,042 Filed: June 30, 2003 Attorney Docket No.: 427600700089 For: A METHOD AND COMPONENTS FOR REPAIRING BROKEN CONDUIT EXTENDING FROM CONCRETE FOUNDATIONS	DECISION ON PETITION REGARDING REQUEST TO WITHDRAW FINALITY UNDER 37 CFR 1.181

This is in response to applicant's petition under 37 CFR 1.181 filed December 12, 2006 requesting withdrawal of the finality of the Office action mailed November 16, 2006 as being premature and improper because claims readable on the elected species have been improperly withdrawn from consideration and not treated on the merits.

The petition is **GRANTED**.

A review of the record reveals that the Office action mailed February 10, 2006 set forth an election requirement requiring a provisional election between three species identified as (1) Figs. 7 and 8, (2) Figs. 9 and 12, and (3) Figs. 10 and 11. Applicant elected the species of Figs. 7 and 8 with traverse in the response filed February 17, 2006 and indicated that claims 10-12, 19, 35, 36, 39, 43-46, 49, 50, 54, 58, 59, and 61 were generic while claims 13, 21, 38, 41, 42, 47, 51, 53, and 55-57 were specifically directed to the elected species.

In the Office action mailed April 25, 2006, the examiner withdrew from consideration claims 19, 21, 38, 39, 41, 42, 49, 54-59, and 61, indicated as readable on the elected species by applicant, with little explanation. Applicant responded by requesting clarification of the reasons why the claims were withdrawn and pointing out why the single reason given was not correct. Applicant's response also included cancellation of claims 32-61 and the presentation of new claims 62-100.

In the Office action mailed November 16, 2006, the examiner withdrew from consideration claims "62-75 and 76-100" (sic, apparently intended to state --claims 62-75 and 77-100-- since claim 76 is rejected on prior art) even though applicant had indicated that claims 62, 63, 65, 69, 70, 72-74, 76, 77, 79, 80, 82-86, 88-90, 92-98, and 100 were readable on the elected species.

However, no explanation is given as to why each of these claims was deemed not to be readable on the elected species. It is further noted that this withdrawal of claims from consideration comes on the heels of the examiner's earlier withdrawal of claims applicant had indicated as readable on the elected species in the Office action mailed April 25, 2006 that applicant disputes in his response filed August 28, 2006.

MPEP 821 states that the examiner should clearly set forth in the Office action the reasons why the claims are not readable on the elected invention. Further, when there is a dispute as to whether or not a claim is readable on the elected invention, the examiner is to reject such claim under 35 U.S.C. 112, second paragraph, as not being readable on the elected invention, i.e., not subject matter which applicant regards as his (elected) invention, instead of continuing to withdraw the claim from consideration. Any rejection under 35 U.S.C. 112, second paragraph, is to be appropriately explained.

In view of the fact that there was a clear dispute already present regarding the readability of claims on the elected species, the examiner erred in withdrawing claims indicated by applicant as readable on the elected species without any explanation instead of rejecting these claims under 35 U.S.C. 112, second paragraph.

Further, review of the claims withdrawn reveals that numerous of these claims actually do "read on" the elected species of Figs. 7 and 8 because they set forth features in such a manner as to encompass the arrangement specifically disclosed for the embodiment of Figs. 7 and 8.

Accordingly, the examiner did not properly treat claims 62-75 and 77-100 and therefore the Office action mailed November 16, 2007 is hereby vacated so that these claims will receive proper consideration. Claims determined to be readable on the elected species will be fully examined on the merits and any disputed claims will be rejected under 35 U.S.C. 112, second paragraph, with a complete explanation as to why they are not considered to be readable.

The application is being forwarded to the examiner for consideration of the amendment filed August 28, 2006. An appropriate Office response will follow in due course.

Donald T. Hajec, Director
Technology Center 3600
(571) 272-5150
KJD/DS: 4/27/07

UNITED STATES PATENT AND TRADEMARK OFFICE

Commissioner for Patents
United States Patent and Trademark Office
P.O. Box 1450
Alexandria, VA 22313-1450
www.uspto.gov

BOSE MCKINNEY & EVANS LLP
JAMES COLES
135 N PENNSYLVANIA ST
SUITE 2700
INDIANAPOLIS IN 46204

COPY MAILED
MAR 14 2007
OFFICE OF PETITIONS

In re Application of	:
MCNALLY-HEINTZELMAN et al.	:
Application No.: 10/610,068	: DECISION ON PETITION
Filed: June 30, 2003	: UNDER 37 CFR 1.78(a)(6)
Attorney Docket No.: 12391-0014	:

This is a decision on the petition under 37 CFR 1.78(a)(6), filed November 16, 2006, to accept an unintentionally delayed claim under 35 U.S.C. § 119(e) for the benefit of a prior-filed provisional application.

The petition is **DISMISSED**.

The present nonprovisional application was filed after November 29, 2000, and the claim herein for the benefit of priority to the prior-filed nonprovisional applications is submitted after expiration of the period specified in 37 CFR 1.78(a)(5)(ii). Therefore, this is a proper petition under 37 CFR 1.78(a)(6).

A petition under 37 CFR 1.78(a)(6) is only applicable to those applications filed on or after November 29, 2000. Further, the petition is appropriate only after expiration of the period specified in 37 CFR 1.78(a)(5)(ii) and must be filed during the pendency of the nonprovisional application. In addition, the petition must be accompanied by:

(1) the reference required by 35 U.S.C. § 119(e) and 37 CFR 1.78(a)(5)(i) to the prior-filed application, unless previously submitted;
(2) the surcharge set forth in § 1.17(t); and
(3) a statement that the entire delay between the date the claim was due under 37 CFR 1.78(a)(5)(ii) and the date the claim was filed was unintentional. The Commissioner may require additional information where there is a question whether the delay was unintentional.

The present pending nonprovisional application was filed on June 30, 2003, within twelve

months of the filing date of the prior-filed provisional application, Application No. 60/442,485, which was filed on January 24, 2003, and for which priority is claimed. A reference to the prior-filed provisional application has been included in an amendment to the first sentence of the specification following the title.

However, the amendment is not acceptable as drafted since it improperly incorporates by reference the prior-filed application. Petitioner's attention is directed to Dart Industries v. Banner, 636 F.2d 684, 207 USPQ 273 (C.A.D.C. 1980), where the court drew a distinction between a permissible 35 U.S.C. § 120 statement and the impermissible introduction of new matter by way of incorporation by reference in a 35 U.S.C. § 120 statement. The court specifically stated:

> Section 120 merely provides a mechanism whereby an application becomes entitled to benefit of the filing date of an earlier application disclosing the same subject matter. Common subject matter must be disclosed, in both applications, either specifically or by an express incorporation-by-reference of prior disclosed subject matter. Nothing in section 120 itself operates to carry forward any disclosure from an earlier application. In re deSeversky, supra at 674, 177 USPQ at 146-147. Section 120 contains no magical disclosure-augmenting powers able to pierce new matter barriers. It cannot, therefore, "limit" the absolute and express prohibition against new matter contained in section 251.

In order for the incorporation by reference statement to be effective as a proper safeguard against the omission of a portion of a prior application, the incorporation by reference statement must be included in the specification-as-filed, or in an amendment specifically referred to in an oath or declaration executing the application. *See* In re deSeversky, *supra*. *Note also* MPEP 201.06(c).

Accordingly, before the petition under 37 CFR 1.78(a)(6) can be granted, a substitute amendment[1] deleting the incorporation by reference statement, along with a renewed petition under 37 CFR 1.78(a)(6), is required.

As authorized, the $1,370 fee required by 37 CFR 1.78(a)(6)(ii) will be charged to petitioner's Deposit Account No. 02-3223.

Further correspondence with respect to this matter should be addressed as follows:

By mail: Mail Stop PETITIONS

---

[1] *Note* 37 CFR 1.121

Commissioner for Patents
Post Office Box 1450
Alexandria, VA 22313-1450

By hand: Customer Service Window
Mail Stop Petitions
Randolph Building
401 Dulany Street
Alexandria, VA 22314

By fax: (571) 273-8300
ATTN: Office of Petitions

Any questions concerning this matter may be directed to Daniel Stemmer at (571) 272-8150.

Daniel Stemmer
Legal Examiner
Office of the Deputy Commissioner
for Patent Examination Policy

Boris Milef
Legal Examiner
Office of the Deputy Commissioner
for Patent Examination Policy

UNITED STATES PATENT AND TRADEMARK OFFICE

APR 25 2007

Commissioner for Patents
United States Patent and Trademark Office
P.O. Box 1450
Alexandria, VA 22313-1450
www.uspto.gov

BOSE MCKINNEY & EVANS LLP
JAMES COLES
135 N PENNSYLVANIA ST
SUITE 2700
INDIANAPOLIS IN 46204

In re Application of	:
Karen M. McNally-Heintzelman et al	:
Serial No.: 10/610,068	: PETITION DECISION
Filed: June 30, 2003	:
Attorney Docket No.: 12391-0014	:

This is a decision on the PETITION FOR ACCEPTANCE OF COLOR DRAWINGS UNDER 37 CFR 1.84(a)(2). The petition was filed December 11, 2006. Entry of color drawings requires: 1) three sets of the color drawings, 2) a proper amendment to the specification indicating color photographs or drawings are present in the file, and 3) the required fee under 37 CFR 1.17(h).

A review of the application record indicates that the petition meets all of the requirements for acceptance of color drawings. This is not to be construed that all of the drawings are accepted, only that the color drawings are acceptable.

The petition is **GRANTED**.

Should there be any questions with respect to this decision, please contact William R. Dixon, Jr., by mail addressed to: Director, Technology Center 1600, at the address listed above, or by telephone at 571-272-0519 or by facsimile transmission at 571-273-8300.

William R. Dixon, Jr.
Special Program Examiner
Technology Center 1600

UNITED STATES PATENT AND TRADEMARK OFFICE

Commissioner for Patents
United States Patent and Trademark Office
P.O. Box 1450
Alexandria, VA 22313-1450
www.uspto.gov

BOSE MCKINNEY & EVANS LLP
JAMES COLES
135 N PENNSYLVANIA ST
SUITE 2700
INDIANAPOLIS IN 46204

COPY MAILED

MAY 23 2007

OFFICE OF PETITIONS

In re Application of	:
MCNALLY-HEINTZELMAN et al.	:
Application No.: 10/610,068	: DECISION ON PETITION
Filed: June 30, 2003	: UNDER 37 CFR 1.78(a)(6)
Attorney Docket No.: 12391-0014	:

This is a decision on the renewed petition under 37 CFR 1.78(a)(6), filed April 2, 2007, to accept an unintentionally delayed claim under 35 U.S.C. §119(e) for the benefit of the prior-filed provisional application set forth in the concurrently filed amendment.

A decision was mailed March 14, 2007 dismissing applicants' petition under 37 CFR 1.78(a)(6), filed November 16, 2006. Specifically, it was noted that a substitute amendment deleting the incorporation by reference statement, along with a renewed petition under 37 CFR 1.78(a)(6), was required.

The petition filed April 2, 2007 is **GRANTED**.

A petition under 37 CFR 1.78(a)(6) is only applicable to those applications filed on or after November 29, 2000. Further, the petition is appropriate only after expiration of the period specified in 37 CFR 1.78(a)(5)(ii) and must be filed during the pendency of the nonprovisional application. In addition, the petition must be accompanied by:

(1) the reference required by 35 U.S.C. § 119(e) and 37 CFR 1.78(a)(5)(i) to the prior-filed application, unless previously submitted;
(2) the surcharge set forth in § 1.17(t); and
(3) a statement that the entire delay between the date the claim was due under 37 CFR 1.78(a)(5)(ii) and the date the claim was filed was unintentional. The Commissioner may require additional information where there is a question whether the delay was unintentional.

The instant pending nonprovisional application was filed after November 29, 2000, and the claim herein for the benefit of priority to the prior-filed provisional application is submitted after

expiration of the period specified in 37 CFR 1.78(a)(5)(ii). Therefore, this is a proper petition under 37 CFR 1.78(a)(6).

The petition complies with the requirements for a grantable petition under 37 CFR 1.78(a)(6) in that (1) a reference to the above-noted, prior-filed provisional application has been included in an amendment to the first sentence of the specification following the title, as provided by 37 CFR 1.78(a)(5)(iii); (2) the surcharge fee required by 37 CFR 1.17(t) has been submitted; and (3) the petition contains a proper statement of unintentional delay. Accordingly, having found that the instant petition for acceptance of an unintentionally delayed claim for the benefit of priority under 35 U.S.C. § 119(e) to the above-noted, prior-filed provisional application satisfies the conditions of 37 CFR 1.78(a)(6), the petition is granted.

The granting of the petition to accept the delayed benefit claim to the prior-filed application under 37 CFR 1.78(a)(6) should not be construed as meaning that the instant application is entitled to the benefit of the filing date of the prior-filed application. In order for the instant application to be entitled to the benefit of the prior-filed application, all other requirements under 35 U.S.C. §119(e) and 37 CFR 1.78(a)(4) and (a)(5) must be met. Similarly, the fact that the corrected Filing Receipt accompanying this decision on petition includes the prior-filed application should not be construed as meaning that applicant is entitled to the claim for benefit of priority to the prior-filed application noted thereon. Accordingly, the examiner will, in due course, consider this benefit claim and determine whether the instant application is entitled to the benefit of the earlier filing date.

A corrected Filing Receipt, which includes the priority claim to the prior-filed provisional application, accompanies this decision on petition.

Any inquiries concerning this decision may be directed to Daniel Stemmer at (571) 272-3301. All other inquiries concerning either the examination procedures or status of the application should be directed to the Technology Center.

The application is being forwarded to Technology Center AU 1615 for appropriate action on the amendment submitted November 16, 2006, including consideration by the examiner of the claim under 35 U.S.C. §119(e) for the benefit of priority to prior-filed provisional Application No. 60/442,485.

Daniel Stemmer
Legal Examiner
Office of the Deputy Commissioner
for Patent Examination Policy

Boris Milef
Legal Examiner
Office of the Deputy Commissioner
for Patent Examination Policy

ATTACHMENT: Corrected Filing Receipt

UNITED STATES PATENT AND TRADEMARK OFFICE

UNITED STATES DEPARTMENT OF COMMERCE
United States Patent and Trademark Office
Address: COMMISSIONER FOR PATENTS
P.O. Box 1450
Alexandria, Virginia 22313-1450
www.uspto.gov

APPL NO.	FILING OR 371(c) DATE	ART UNIT	FIL FEE REC'D	ATTY.DOCKET NO	TOT CLMS	IND CLMS
10/610,068	06/30/2003	1615	1527	12391-0014	34	3

CONFIRMATION NO. 1896

CORRECTED FILING RECEIPT

OC000000023814407

25267
BOSE MCKINNEY & EVANS LLP
JAMES COLES
135 N PENNSYLVANIA ST
SUITE 2700
INDIANAPOLIS, IN 46204

Date Mailed: 05/10/2007

Receipt is acknowledged of this regular Patent Application. It will be considered in its order and you will be notified as to the results of the examination. Be sure to provide the U.S. APPLICATION NUMBER, FILING DATE, NAME OF APPLICANT, and TITLE OF INVENTION when inquiring about this application. Fees transmitted by check or draft are subject to collection. Please verify the accuracy of the data presented on this receipt. **If an error is noted on this Filing Receipt, please mail to the Commissioner for Patents P.O. Box 1450 Alexandria Va 22313-1450. Please provide a copy of this Filing Receipt with the changes noted thereon. If you received a "Notice to File Missing Parts" for this application, please submit any corrections to this Filing Receipt with your reply to the Notice. When the USPTO processes the reply to the Notice, the USPTO will generate another Filing Receipt incorporating the requested corrections (if appropriate).**

Applicant(s)

Karen M. McNally-Heintzelman, Cambridge, MA;
Douglas L. Heintzelman, Cambridge, MA;
Jeffrey N. Bloom, Chicago, IL;
Mark T. Duffy, Chicago, IL;

Power of Attorney:

James Coles--28291
Timothy Niednagel--33266
Douglas Yerkeson--39882
Richard Carter--40549
Robert Null--40746
William Meyers--42884
Norman Hedges--44151
Christine Orich--44987
Ryan Barker--47405
Charles Arnett--51414

Domestic Priority data as claimed by applicant

This appln claims benefit of 60/442,485 01/24/2003

Foreign Applications

If Required, Foreign Filing License Granted: 09/24/2003

The country code and number of your priority application, to be used for filing abroad under the Paris Convention, is US10/610,068

Projected Publication Date: Not Applicable

Non-Publication Request: No

Early Publication Request: No

Title

Non-light activated adhesive composite, system, and methods of use thereof

Preliminary Class

424

PROTECTING YOUR INVENTION OUTSIDE THE UNITED STATES

Since the rights granted by a U.S. patent extend only throughout the territory of the United States and have no effect in a foreign country, an inventor who wishes patent protection in another country must apply for a patent in a specific country or in regional patent offices. Applicants may wish to consider the filing of an international application under the Patent Cooperation Treaty (PCT). An international (PCT) application generally has the same effect as a regular national patent application in each PCT-member country. The PCT process **simplifies** the filing of patent applications on the same invention in member countries, but **does not result** in a grant of "an international patent" and does not eliminate the need of applicants to file additional documents and fees in countries where patent protection is desired.

Almost every country has its own patent law, and a person desiring a patent in a particular country must make an application for patent in that country in accordance with its particular laws. Since the laws of many countries differ in various respects from the patent law of the United States, applicants are advised to seek guidance from specific foreign countries to ensure that patent rights are not lost prematurely.

Applicants also are advised that in the case of inventions made in the United States, the Director of the USPTO must issue a license before applicants can apply for a patent in a foreign country. The filing of a U.S. patent application serves as a request for a foreign filing license. The application's filing receipt contains further information and guidance as to the status of applicant's license for foreign filing.

Applicants may wish to consult the USPTO booklet, "General Information Concerning Patents" (specifically, the section entitled "Treaties and Foreign Patents") for more information on timeframes and deadlines for filing foreign patent applications. The guide is available either by contacting the USPTO Contact Center at 800-786-9199, or it can be viewed on the USPTO website at http://www.uspto.gov/web/offices/pac/doc/general/index.html.

For information on preventing theft of your intellectual property (patents, trademarks and copyrights), you may wish to consult the U.S. Government website, http://www.stopfakes.gov. Part of a Department of Commerce initiative, this website includes self-help "toolkits" giving innovators guidance on how to protect intellectual property in specific countries such as China, Korea and Mexico. For questions regarding patent enforcement issues, applicants may call the U.S. Government hotline at 1-866-999-HALT (1-866-999-4158).

LICENSE FOR FOREIGN FILING UNDER
Title 35, United States Code, Section 184
Title 37, Code of Federal Regulations, 5.11 & 5.15

GRANTED

The applicant has been granted a license under 35 U.S.C. 184, if the phrase "IF REQUIRED, FOREIGN FILING LICENSE GRANTED" followed by a date appears on this form. Such licenses are issued in all applications where

the conditions for issuance of a license have been met, regardless of whether or not a license may be required as set forth in 37 CFR 5.15. The scope and limitations of this license are set forth in 37 CFR 5.15(a) unless an earlier license has been issued under 37 CFR 5.15(b). The license is subject to revocation upon written notification. The date indicated is the effective date of the license, unless an earlier license of similar scope has been granted under 37 CFR 5.13 or 5.14.

This license is to be retained by the licensee and may be used at any time on or after the effective date thereof unless it is revoked. This license is automatically transferred to any related applications(s) filed under 37 CFR 1.53(d). This license is not retroactive.

The grant of a license does not in any way lessen the responsibility of a licensee for the security of the subject matter as imposed by any Government contract or the provisions of existing laws relating to espionage and the national security or the export of technical data. Licensees should apprise themselves of current regulations especially with respect to certain countries, of other agencies, particularly the Office of Defense Trade Controls, Department of State (with respect to Arms, Munitions and Implements of War (22 CFR 121-128)); the Bureau of Industry and Security, Department of Commerce (15 CFR parts 730-774); the Office of Foreign Assets Control, Department of Treasury (31 CFR Parts 500+) and the Department of Energy.

NOT GRANTED

No license under 35 U.S.C. 184 has been granted at this time, if the phrase "IF REQUIRED, FOREIGN FILING LICENSE GRANTED" DOES NOT appear on this form. Applicant may still petition for a license under 37 CFR 5.12, if a license is desired before the expiration of 6 months from the filing date of the application. If 6 months has lapsed from the filing date of this application and the licensee has not received any indication of a secrecy order under 35 U.S.C. 181, the licensee may foreign file the application pursuant to 37 CFR 5.15(b).

UNITED STATES PATENT AND TRADEMARK OFFICE

PET DEC

Commissioner for Patents
United States Patent and Trademark Office
P.O. Box 1450
Alexandria, VA 22313-1450
www.uspto.gov

JAN 19 2005

In re Application of SELVAMANICKAM. Serial Number: 10/610,072 Filed: June 30, 2003 For: COATED HIGH TEMPERATURER SUPERCONDUCTING TAPES, ARTICLES AND PROCESSES FOR FORMING SAME	: : : : : : : :	PETITION UNDER M.P.E.P.708.02 IX

This is in response to the petition filed January 5, 2004, requesting that the above-identified application be granted Special Status under Sections 708.02 IX of the MPEP and 37 CFR 1.102 (**no fee required**).

The request for Special Status considered under Section 708.02 IX is granted because criteria under 37 CFR 1.102 have been met.

The petition is **GRANTED.**

Richard Crispino, Special Programs Examiner
Technology Center 1700
Chemical and Materials Engineering

Toler & Larson & Abel L.L.P.
5000 Plaza On The Lake
STE 265
Austin, TX 78746

UNITED STATES PATENT AND TRADEMARK OFFICE

Commissioner for Patents
United States Patent and Trademark Office
P.O. Box 1450
Alexandria, VA 22313-1450
www.uspto.gov

JAN 27 2005

012005

David M. Ostfeld
ADAMS AND REESE, LLP
4400 ONE HOUSTON CENTER
1221 MCKINNEY
Houston TX 77010

In re Application of Rodney Barr et al.	:	
Application No.: 10/610,089	:	WITHDRAWAL FROM ISSUE
Filed: June 30, 2003	:	UNDER 37 C.F.R. § 1.313
For: ISOLATED MAGNETOSTRICTIVE BUFFERED LIQUID LEVEL SENSOR	:	

The purpose of this communication is to inform you that the above-identified application is being withdrawn from issue due to unpatentability of one or more claims pursuant to 37 C.F.R. § 1.313.

The U.S. Patent and Trademark Office records reveal that the issue fee has not been paid. If the issue fee has been submitted, the applicant may request a refund, or may request that the fee be credited to a deposit account. However, applicant may wait until the application is either again found allowable or held abandoned. If the application is allowed, upon receipt of a new Notice of Allowance and Fee(s) Due, applicant may request that the previously submitted issue fee be applied toward payment of the issue fee in the amount identified on the new Notice of Allowance and Fee(s) Due. If the application is abandoned, applicant may request either a refund or a credit to a Deposit Account.

Any question regarding this communication should be directed to Nancy Le, Supervisory Patent Examiner, at (571) 272-2233.

An Office action will be mailed shortly.

Howard N. Goldberg, Director
Technology Center 2800
Semiconductors, Electrical and Optical
Systems and Components

UNITED STATES PATENT AND TRADEMARK OFFICE

COMMISSIONER FOR PATENTS
UNITED STATES PATENT AND TRADEMARK OFFICE
P.O. BOX 1450
ALEXANDRIA, VA 22313-1450
www.uspto.gov

MAILED

JUN 2 2004

Office of the Director
Group 3600

Nathaniel Levin
Buckley, Maschoff, Talwalkar & Allison LLC
5 Elm Street
New Canaan, CT 06840

In re application of
Robert Baum et al.
Application No. 10/610,103
Filed: June 30, 2003
For: ENGAGEMENT SET WITH LOCKING ARRANGEMENT AND REAR CROSSOVER CONFIGURATION

DECISION ON PETITION TO MAKE SPECIAL (APPLICANT'S AGE)

This is a decision on the petition submitted on September 26, 2003 under 37 CFR 1.102 (c) to make the above-identified application special under the accelerated examination procedure set forth in MPEP 708.02, Section IV: Applicant's Age.

The petition is **GRANTED**.

An application may be accorded special status upon the filing of a petition providing evidence showing that the applicant is at least 65 years old. Such a showing may be provided by evidence such as a birth certificate or a statement from the applicant.

The evidence submitted with the petition is a declaration signed by Mr. Robert Baum indicating that he is at least 65 years of age.

The examiner is directed (1) to make an interference search for possible interfering applications, (2) to promptly examine this application out of turn, and (3) if any interfering application is discovered, to examine such application simultaneously and state in the first official letter of such application that it is being taken out of turn because of a possible interference.

Petitioner is advised that this application will continue to be special, throughout its entire prosecution and pendency, including interference or appeal, if any, only if petitioner makes a prompt ***bona fide*** effort, in response to each Office action, to place the application in condition for allowance, even if it is necessary to conduct an interview with the examiner to accomplish this purpose.

SUMMARY: Petition to Make Special **GRANTED**.

Kenneth J. Dorner
Special Programs Examiner
Technology Center 3600
(703) 308-0866

KJD/vdb: 5/5/04

UNITED STATES PATENT AND TRADEMARK OFFICE

COMMISSIONER FOR PATENTS
UNITED STATES PATENT AND TRADEMARK OFFICE
P.O. BOX 1450
ALEXANDRIA, VA 22313-1450
www.uspto.gov

BUCKLEY, MASCHOFF, TALWALKAR LLC
5 Elm Street
New Canaan, CT 06840

MAILED

JUN 03 2004

Office of the Director
Group 3300

In re application of
Robert Baum
Application No. 10/610,103
Filed: June 30, 2003
For: ENGAGEMENT SET WITH LOCKING ARRANGEMENT AND REAR CROSSOVER CONFIGURATION

DECISION ON PETITION TO MAKE SPECIAL (APPLICANT'S AGE)

This is a decision on the petition submitted on September 26, 2003 under 37 CFR 1.102 (c) to make the above-identified application special under the accelerated examination procedure set forth in MPEP 708.02, Section IV: Applicant's Age.

The petition is **GRANTED**.

An application may be accorded special status upon the filing of a petition providing evidence showing that the applicant is at least 65 years old. Such a showing may be provided by evidence such as a birth certificate or a statement from the applicant.

The evidence submitted with the petition is declaration signed by Mr. Baum indicating that he is at least 65 years of age.

The examiner is directed (1) to make an interference search for possible interfering applications, (2) to promptly examine this application out of turn, and (3) if any interfering application is discovered, to examine such application simultaneously and state in the first official letter of such application that it is being taken out of turn because of a possible interference.

Petitioner is advised that this application will continue to be special, throughout its entire prosecution and pendency, including interference or appeal, if any, only if petitioner makes a prompt ***bona fide*** effort, in response to each Office action, to place the application in condition for allowance, even if it is necessary to conduct an interview with the examiner to accomplish this purpose.

SUMMARY: Petition to Make Special **GRANTED**.

Kenneth J. Dorner
Special Programs Examiner
Technology Center 3600
(703) 308-0866

KJD/pav: 6/01/04

UNITED STATES PATENT AND TRADEMARK OFFICE

Commissioner for Patents
United States Patent and Trademark Office
P.O. Box 1450
Alexandria, VA 22313-1450
www.uspto.gov

CR MILES, P.C.
1 OLD TOWN SQUARE, SUITE 200 B
FORT COLLINS CO 80524

COPY MAILED

FEB 2 5 2005

OFFICE OF PETITIONS

In re Application of	:
Kirsner	: DECISION DISMISSING
Application No. 10/610,115	: PETITION
Filed: June 30, 2003	:
Attorney Docket No. KirsnerUSVProbe	:
For: VAGINAL PROBE	:

This is a decision on the petition, filed January 24, 2005, requesting, in effect partial withdrawal of the Notice to File Corrected Application Papers, mailed November 23, 2004, insofar as the Notice alleged that the application was filed without Figures 10B, 11, 12A-12C. Petitioner requests that Figures 10B, 11, 12A- 12C be considered as filed on June 30, 2003. The petition will be treated under 37 CFR 1.53(e).

The petition under 37 CFR 1.53(e) is **DISMISSED**. Any reconsideration petition should be submitted within TWO (2) MONTHS from the mail date of this decision.

President Bush signed the Consolidated Appropriations Act, 2005 for the remainder of Fiscal Year 2005 and Fiscal Year 2006 on December 8, 2004. This Act revised several patent fees. Effective December 8, 2004, the petition fee for filing a petition under 37 CFR 1.53(e) is $400.00. Petitioner paid $130.00 on January 24, 2005.

The merits of the instant petition will not be addressed until the balance due towards full payment of the $400.00 petition fee ($270.00) is paid.

Further correspondence with respect to this matter should be addressed as follows:

By mail: Mail Stop PETITION
Commissioner for Patents
Post Office Box 1450
Alexandria, VA 22313-1450

By hand: U.S. Patent and Trademark Office
Customer Service Window, Mail Stop Petition
Randolph Building
401 Dulany Street
Alexandria, VA 22314

By FAX: (703) 872-9306 – ATTN: Office of Petitions

Telephone inquiries pertaining to this decision may be directed to the undersigned at (571) 272-3230.

E. Shirene Willis

E. Shirene Willis
Senior Petitions Attorney
Office of Petitions
Office of the Deputy Commissioner
for Patent Examination Policy

UNITED STATES PATENT AND TRADEMARK OFFICE

Commissioner for Patents
United States Patent and Trademark Office
P.O. Box 1450
Alexandria, VA 22313-1450
www.uspto.gov

CR MILES, P.C.
1 OLD TOWN SQUARE, SUITE 200 B
FORT COLLINS CO 80524

COPY MAILED

AUG 0 2 2005

OFFICE OF PETITIONS

In re Application of	:
Kirsner	: DECISION DISMISSING
Application No. 10/610,115	: PETITION
Filed: June 30, 2003	:
Attorney Docket No. KirsnerUSVProbe	:
For: VAGINAL PROBE	:

This is a decision on the petition, filed March 25, 2005, requesting, in effect partial withdrawal of the Notice to File Corrected Application Papers, mailed November 23, 2004, insofar as the Notice alleged that the application was filed without Figures 10B, 11, 12A-12C. Petitioner requests that Figures 10B, 11, 12A- 12C be considered as filed on June 30, 2003. The petition will be treated under 37 CFR 1.53(e).

The petition under 37 CFR 1.53(e) is **DISMISSED**.

The application was filed on June 30, 2003. However, on November 23, 2004,the Office of Initial Patent Examination mailed a notice stating that the application had been accorded a filing date of June 30, 2003, but advising applicant that drawings of Figures 10B, 11, 12A-12C described in the specification appeared to have been omitted.

In response, the present petition was filed wherein applicant argues (1) that the omitted figures were filed along with the application on June 30, 2003 and in the alternative, (2) that applicant claimed the benefit of provisional application No. 60/392,551, and that since the omitted drawings were included in the provisional application, that the figures as filed in the provisional application should be entered into the present application and be accorded a filing date of June 30, 2003.

Regarding petitioner's first argument, the Office file is the official record of what was filed on June 30, 2003. A review of the Office file shows that Figures 10B, 11, 12A-12C described in the specification are not among the application papers. An applicant alleging that a paper was filed in the Office and later misplaced has the burden of proving the allegation by a preponderance of the

evidence. In this regard, declarations by individuals involved in the preparation and mailing of the original application reciting their personal recollection or belief of what was contained in the application that they reviewed and/or filed are no more persuasive of what was actually filed than the contents of the official record. Such statements, as in this case, are usually made months after the actual events recited.

It is for this reason that the Office has established a practice of providing a receipt for papers filed in the Office to any applicant desiring a receipt. The practice, which was long ago established and is well publicized, requires that any paper for which a receipt is desired be filed in the Office with a self-addressed postcard identifying the paper. A postcard receipt which itemizes and properly identifies the papers which are being filed serves as *prima facie* evidence of receipt in the Office of all the items listed thereon on the date stamped thereon by the Office. See section 503, Manual Of Patent Examining Procedure (MPEP 503).

Petitioner has not provided his date stamped itemized postcard receipt showing 12 sheets of drawings were filed on June 30, 2003.

Regarding petitioner's second argument, there is no valid incorporation by reference statement in the transmittal letter or in the specification. The mere reference in an application to another application is not an incorporation of anything contained in the other application into the referencing application. See In re Seversky, 177 USPQ 144, 146 (C.C.P.A. 1973) and Dart Industries, Inc. v. Banner, 207 USPQ 273, 276 (D.C. Cir. 1980). Therefore, the fact that applicant mentioned provisional application no. 60/392,551 in the papers filed on June 30, 2003 does not mean that applicant incorporated-by-reference into the papers filed in the present application on June 30, 2003, anything disclosed in the prior provisional application.

Petitioner has not shown that Figures 10B, 11, 12A-12C were present among the original application papers filed on June 30, 2003 or that they were validly incorporated by reference into the papers filed on June 30, 2003. The petition is **DISMISSED**.

Of course, applicant may submit the drawings of Figures 10B, 11, 12A-12C as an amendment to the drawings, in which case the examiner will determine whether the additional sheets of drawings contain new matter.

The application is being returned to the Office of Initial Patent Examination for further processing.

Further correspondence with respect to this matter should be addressed as follows:

By mail: Mail Stop PETITION
Commissioner for Patents
Post Office Box 1450
Alexandria, VA 22313-1450

By hand: U.S. Patent and Trademark Office
Customer Service Window, Mail Stop Petition
Randolph Building
401 Dulany Street
Alexandria, VA 22314

By FAX: (571) 273-8300 - ATTN: Office of Petitions

Telephone inquiries pertaining to this decision may be directed to the undersigned at (571) 272-3230.

E Shirene Willis

E. Shirene Willis
Senior Petitions Attorney
Office of Petitions
Office of the Deputy Commissioner
for Patent Examination Policy

UNITED STATES PATENT AND TRADEMARK OFFICE

Commissioner for Patents
United States Patent and Trademark Office
P.O. Box 1450
Alexandria, VA 22313-1450
www.uspto.gov

SONNENSCHEIN NATH & ROSENTHAL LLP
P.O. BOX 061080
WACKER DRIVE STATION, SEARS TOWER
CHICAGO IL 60606-1080

MAILED

MAR 30 2009

OFFICE OF PETITIONS

In re Application of
McDougal, et al.
Application No. 10/610,117
Filed: June 30, 2003
Attorney Docket No. 11000060-0024
For: SYSTEM AND METHOD FOR AUTOMATED ROUTING AND PROCESSING OF TELECOMMUNICATION SERVICE ORDERS

ON PETITION

This is a decision on the petition under 37 CFR 1.181, filed March 12, 2009, requesting withdrawal of the holding of abandonment in the above-identified application. In the alternative, petitioners request revival under the unavoidable delay standard of 37 CFR 1.137(a).

The petition under 37 CFR 1.181 is **DISMISSED**.

The petition under 37 CFR 1.137(a) is **DISMISSED**.

Any further reconsideration petition must be submitted within TWO (2) MONTHS from the mail date of this decision. Extensions of time under 37 CFR 1.136(a) are permitted. This is **not** final agency action within the meaning of 5 U.S.C. § 704.

The above-identified application became abandoned for failure to submit a reply to the March 18, 2008 non-final Office action, which set an extendable three month period for reply. No extensions of time or reply being received, the Office considered this application abandoned on June 19, 2008. A Notice of Abandonment was mailed on September 26, 2008.

Petitioners assert that the March 18, 2008 was not by practitioner because the failure of the USPTO to enter a power of attorney and change of correspondence address, filed on December 8, 2006, resulted in the March 18, 2008 non-final Office action being directed to an out-of-date address. Therefore requests withdrawal of the holding of abandonment.

MPEP Eighth edition, Rev. 5, August 2006 Section 402.07 states that a power of attorney by an assignee of the entire interest revokes all powers of attorney given by an application and prior assignees if the assignee establishes their right to take action as provided in 37 CFR 3.73(b). See 324.

MPEP Eighth edition, Rev. 5, August 2006 Section 324 states that an assignee may establish a right to take action by submitting (1) documentary evidence of the chain of title from the original owner to the assignee and a statement that the chain of title was, or currently is being, submitted for recordation or (2) submitting a reel and frame number where the assignment was recorded.

In the instant case, a Revocation and Power of Attorney and Appointment of New Power of Attorney executed by Chris D. Schneider, Vice-President of Commercial Law for Embarq Corporation for Embarq Holdings Company, LLC, was filed on December 8, 2006. Unfortunately, the document was not accompanied by a 3.73(b) statement or a showing in compliance with MPEP 324.

In short, the Office received a revocation/power of attorney/change of correspondence address signed by a representative of an entity that had not established its right to make the requested changes. Therefore, the Office was not in error when it refused to enter the requested changes and the March 18, 2008 non-final Office action was properly mailed to the correspondence address of record. The petition to withdraw the holding of abandonment due to non-receipt is dismissed.

Petitioners filed a petition to revive under 37 CFR 1.137(a) in the alternative. Pursuant to petitioners' authorization, deposit account no. 19-3140 will be charged the required $540.00 petition fee.

A grantable petition under 37 CFR 1.137(a) must be accompanied by: (1) the required reply, unless previously filed; (2) the petition fee as set forth in 37 CFR 1.17(l); (3) a showing to the satisfaction of the Director that the entire delay in filing the required reply from the due date for the reply until the filing of a grantable petition pursuant to 37 CFR 1.137(a) was unavoidable; and (4) any terminal disclaimer (and fee as set forth in 37 CFR 1.20(d)) required pursuant to 37 CFR 1.137(d). The instant petition lacks item (3).

Regarding (3) above, petitioners have not shown to the satisfaction of the Director that the entire delay from the due date of the reply to the filing of a grantable petition was unavoidable.

The Director may revive an abandoned application if the delay in responding to the relevant outstanding Office requirement is shown to the satisfaction of the Director to have been "unavoidable". 35 U.S.C. § 133. Decisions on reviving abandoned applications have adopted the reasonably prudent person standard in determining if the delay was unavoidable:

> The word unavoidable ... is applicable to ordinary human affairs, and requires no more or greater care or diligence than is generally used and observed by prudent and careful men in relation to their most important business. It permits them in the exercise of this care to rely upon the ordinary and trustworthy agencies of mail and telegraph, worthy and reliable employees, and such other means and instrumentalities as are usually employed in such important business. If unexpectedly, or through the unforeseen fault or imperfection of these agencies and instrumentalities, there occurs a failure, it may

properly be said to be unavoidable, all other conditions of promptness in its rectification being present.

Ex parte Pratt, 1887 Dec. Comm'r Pat. 31, 32-33 (Comm'r Pat. 1887)(the term "unavoidable" "is applicable to ordinary human affairs, and requires no more or greater care or diligence than is generally used and observed by prudent and careful men in relation to their most important business"); In re Mattullath, 38 App. D.C. 497, 514-15 (D.C. Cir. 1912); Ex parte Henrich, 1913 Dec. Comm'r Pat. 139, 141 (Comm'r Pat. 1913). In addition, decisions on revival are made on a "case-by-case basis, taking all the facts and circumstances into account." Smith v. Mossinghoff, 671 F.2d 533, 538, 213 USPQ 977, 982 (D.C. Cir. 1982). Finally, a petition to revive an application as unavoidably abandoned cannot be granted where a petitioner has failed to meet his or her burden of establishing the cause of the unavoidable delay. Haines v. Quigg, 673 F. Supp. 314, 5 USPQ2d 1130 (N.D. Ind. 1987).

The showing of record is inadequate to establish unavoidable delay within the meaning of 37 CFR 1.137(a). Specifically, an application is "unavoidably" abandoned only where petitioner, or counsel for petitioner, takes all action necessary for a proper response to the outstanding Office action, but through the intervention of unforeseen circumstances, such as failure of mail, telegraph, telefacsimile, or the negligence of otherwise reliable employees, the response is not timely received in the Office. Ex parte Pratt, 1887 Dec. Comm'r Pat. 31 (Comm'r Pat. 1887).

Petitioners argue the delay in responding to the March 18, 2008 non-final Office action was unavoidable.

Petitioners have not provided acceptable, persuasive evidence that a proper change of address was filed prior to March 18, 2008. Therefore, the Office mailed the March 18, 2008 non-final Office action to the last address on record, which was not up-to-date. An applicant is responsible for specifying a correct correspondence address. A delay caused by the failure on the part of the petitioners to provide the Office with a current correspondence address does not constitute an unavoidable delay. See Ray v. Lehman, 55 F.3d 606, 34 USPQ2d 1786 (Fed. Cir. 1995).

While it is true that petitioners attempted to file a revocation/power of attorney/change of correspondence address on December 8, 2006, the document was not in compliance with Office rules. A delay resulting from the lack of knowledge or improper application of the patent statute, rules of practice or the MPEP does not constitute an "unavoidable" delay. See Haines v. Quigg, 673 F. Supp. 314, 317, 5 USPQ2d 1130, 1132 (N.D. Ind. 1987), Vincent v. Mossinghoff, 230 USPQ 621, 624 (D.D.C. 1985); Smith v. Diamond, 209 USPQ 1091 (D.D.C. 1981); Potter v. Dann, 201 USPQ 574 (D.D.C. 1978); Ex parte Murray, 1891 Dec. Comm'r Pat. 130, 131 (1891).

The petition under 37 CFR 1.137(a) is dismissed.

Petitioners are strongly encouraged to file a petition to revive under the unintentional standard of 137(b). The filing of a petition under 37 CFR 1.137(b) cannot be intentionally delayed and therefore must be filed promptly. A person seeking revival due to unintentional delay cannot make a statement that the delay was unintentional unless the entire delay, including the date it

was discovered that the application was abandoned until the filing of the petition to revive under 37 CFR 1.137(b), was unintentional. A statement that the delay was unintentional is not appropriate if petitioner intentionally delayed the filing of a petition for revival under 37 CFR 1.137(b).

Further correspondence with respect to this matter should be addressed as follows:

By mail:
Mail Stop PETITION
Commissioner for Patents
Post Office Box 1450
Alexandria, VA 22313-1450

By hand:
U.S. Patent and Trademark Office
Customer Service Window, Mail Stop Petition
Randolph Building
401 Dulany Street
Alexandria, VA 22314

By FAX: (571) 273-8300 - ATTN: Office of Petitions

Telephone inquiries may be directed to the undersigned at (571) 272-3230.

Shirene Willis Brantley

Shirene Willis Brantley
Senior Petitions Attorney
Office of Petitions

UNITED STATES PATENT AND TRADEMARK OFFICE

Commissioner for Patents
United States Patent and Trademark Office
P.O. Box 1450
Alexandria, VA 22313-1450
www.uspto.gov

SONNENSCHEIN NATH & ROSENTHAL LLP
P.O. BOX 061080
WACKER DRIVE STATION, SEARS TOWER
CHICAGO IL 60606-1080

MAILED

MAY 06 2009

OFFICE OF PETITIONS

In re Application of
McDougal, et al.
Application No. 10/610,117
Filed: June 30, 2003
Attorney Docket No. 11000060-0024
For: SYSTEM AND METHOD FOR AUTOMATED ROUTING AND PROCESSING OF TELECOMMUNICATION SERVICE ORDERS

ON PETITION

This is a decision on the petition under 37 CFR 1.137(b), filed April 10, 2009, requesting revival under the uninitentional delay standard of 37 CFR 1.137(b).

The petition under 37 CFR 1.137(b) is **GRANTED**.

The above-identified application became abandoned for failure to submit a reply to the March 18, 2008 non-final Office action, which set an extendable three month period for reply. No extensions of time or reply being received, the Office considered this application abandoned on June 19, 2008. A Notice of Abandonment was mailed on September 26, 2008.

Applicants have submitted an amendment in reply to the March 18, 2008 non-final Office action, an acceptable statement of the unintentional nature of the delay in responding to the March 18, 2008 non-final Office action, and the $1,620.00 petition fee. All of the requirements under 37 CFR 1.137(b) being met, the petition is granted.

After the mailing of this decision, the application will be returned to Technology Center AU 2614 for consideration of the amendment filed on April 10, 2009.

Telephone inquiries may be directed to the undersigned at (571) 272-3230.

Shirene Willis Brantley
Senior Petitions Attorney
Office of Petitions

UNITED STATES PATENT AND TRADEMARK OFFICE

Commissioner for Patents
United States Patent and Trademark Office
P.O. Box 1450
Alexandria, VA 22313-1450
www.uspto.gov

SCHWEGMAN, LUNDBERG
WOESSNER & KLUTH, P.A.
P.O. BOX 2938
MINNEAPOLIS MN 55402

COPY MAILED

NOV 17 2006

OFFICE OF PETITIONS

In re Application of :
FELDMAN, et al. :
Application No. 10/610,125 : DECISION ON PETITION
Filed: June 30, 2003 : TO WITHDRAW
Attorney Docket No. 3801P119 : FROM RECORD

This is a decision on the Request to Withdraw as attorney or agent of record under 37 C.F.R. § 1.36(b), filed November 22, 2004.

The request is **NOT APPROVED**.

A grantable request to withdraw as attorney/agent of record must be signed by every attorney/agent seeking to withdraw or contain a clear indication that one attorney is signing on behalf of another/others. A request to withdraw will not be approved unless at least 30 (thirty) days would remain between the date of approval and the later of the expiration date of a time to file a response or the expiration date of the maximum time period which can be extended under 37 C.F.R. § 1.136(a).

The Office cannot approve the request at this time since the reasons provided do not meet any of the conditions under the mandatory or permissive categories enumerated in 37 CFR 10.40. Section 10.40 of Title 37 of the Code of Federal Regulation states, "[a] practitioner shall not withdraw from employment in a proceeding before the Office without permission from the Office[.]" More specifically, 37 CFR 10.40 states, "[i]f paragraph (b) of this section is not applicable, a practitioner may not request permission to withdraw in matter pending before the Office unless such request or such withdrawal is" for one the permissive reasons listed in 37 CFR 10.40(c). The reasons set forth in the request, "discontinuation of attorney/client relationship", does not meet any of the conditions set forth in 37 CFR 10.40.

All future communications from the Office will continue to be directed to the above-listed address until otherwise notified by applicant.

Telephone inquiries concerning this decision should be directed to the undersigned at 571-272-7253.

Monica A. Graves
Petitions Examiner
Office of Petitions

cc: **Andre L. Marais**
Schwegman Lundberg Woessner & Kluth PA
1600 TCF Tower
121 South Eighth Street
Minneapolis, MN 55402

UNITED STATES PATENT AND TRADEMARK OFFICE

Commissioner for Patents
United States Patent and Trademark Office
P.O. Box 1450
Alexandria, VA 22313-1450
www.uspto.gov

JAMES TROSINO
268 BUSH STREET, #3434
SAN FRANCISCO, CA 94104

COPY MAILED

DEC 09 2004

OFFICE OF PETITIONS

ON PETITION

In re Application of :
Pierre Lermant et al :
Application No. 10/610,128 :
Filed: June 30, 2003 :
Attorney Docket No. EFIM0329

This is a decision on the petition, filed December 2, 2004, under 37 CFR 1.313(c)(2) to withdraw the above-identified application from issue after payment of the issue fee.

The petition is **GRANTED**.

The above-identified application is withdrawn from issue for consideration of a submission under 37 CFR 1.114 (request for continued examination). See 37 CFR 1.313(c)(2).

Petitioner is advised that the issue fee paid on November 8, 2004 in the above-identified application cannot be refunded. If, however, the above-identified application is again allowed, petitioner may request that it be applied towards the issue fee required by the new Notice of Allowance.[1]

Telephone inquiries should be directed to Irvin Dingle at (571) 272-3210.

This matter will be forwarded to Technology Center AU 2854 for processing of the request for continued examination under 37 CFR 1.114 and for consideration of the concurrently filed Information Disclosure Statement.

Irvin Dingle
Petitions Examiner
Office of Petitions
Office of the Deputy Commissioner
for Patent Examination Policy

[1] The request to apply the issue fee to the new Notice may be satisfied by completing and returning the new Issue Fee Transmittal Form PTOL-85(b), which includes the following language thereon: Commissioner for Patents is requested to apply the Issue Fee and Publication Fee (if any) or re-apply any previously paid issue fee to the application identified above. Petitioner is advised that, whether a fee is indicated as being due or not, the Issue Fee Transmittal Form **must** be completed and timely submitted to avoid abandonment. Note the language in bold text on the first page of the Notice of Allowance and Fee(s) Due (PTOL-85).

UNITED STATES PATENT AND TRADEMARK OFFICE

Commissioner for Patents
United States Patent and Trademark Office
P.O. Box 1450
Alexandria, VA 22313-1450
www.uspto.gov
DIW May-08

STOLOWITZ FORD COWGER LLP
621 SW MORRISON ST
SUITE 600
PORTLAND OR 97205

COPY MAILED

MAY 29 2008

OFFICE OF PETITIONS

In re Application of :
Bjornson et al. :
Application Number: 10/610133 :
Filing Date: 06/30/2003 : ON PETITION
Attorney Docket Number: 5549-0003 :

This is a decision on the petition under 37 CFR 1.137(b)[1] filed on October 17, 2007, to revive the above-identified application.

The petition is **GRANTED**.

This application became abandoned on January 12, 2007, for failure to file a timely reply to the non-final Office action mailed on October 11, 2006, which set a three (3) month shortened statutory period for reply. No extensions of the time for reply in accordance with 37 CFR 1.136(a) were obtained. Notice of Abandonment was mailed on July 23, 2007.

---

[1] Effective December 1, 1997, the provisions of 37 CFR 1.137(b) now provide that where the delay in reply was unintentional, a petition may be filed to revive an abandoned application or a lapsed patent pursuant to 37 CFR 1.137(b). A grantable petition filed under the provisions of 37 CFR 1.137(b) must be accompanied by:

(1) the required reply, unless previously filed. In a nonprovisional application abandoned for failure to prosecute, the required reply may be met by the filing of a continuing application. In a nonprovisional application filed on or after June 8, 1995, and abandoned for failure to prosecute, the required reply may also be met by the filing of a request for continued examination in compliance with § 1.114. In an application or patent, abandoned or lapsed for failure to pay the issue fee or any portion thereof, the required reply must be the payment of the issue fee or any outstanding balance thereof. In an application abandoned for failure to pay the publication fee, the required reply must include payment of the publication fee.

(2) the petition fee as set forth in 37 CFR 1.17(m);

(3) a statement that the entire delay in filing the required reply from the due date for the reply until the filing of a grantable petition pursuant to 37 CFR 1.137(b) was unintentional. The Director may required additional information where there is a question whether the delay was unintentional; and

(4) any terminal disclaimer (and fee as set forth in 37 CFR 1.20(d)) required pursuant to 37 CFR 1.137(c)).

Petitioners have filed an amendment in response to the non-final Office action mailed on October 11, 2006, as the required reply.

It is not apparent whether the person signing the statement of unintentional delay was in a position to have firsthand or direct knowledge of the facts and circumstances of the delay at issue. Nevertheless, such statement is being treated as having been made as the result of a reasonable inquiry into the facts and circumstances of such delay.[2] In the event that such an inquiry has not been made, petitioner must make such an inquiry. If such inquiry results in the discovery that it is not correct that the entire delay in filing the required reply from the due date for the reply until the filing of a grantable petition pursuant to 37 CFR 1.137(b) was unintentional, petitioner must notify the Office.

The application is referred to Technology Center Art Unit 2193 for further processing.

Telephone inquiries concerning this matter may be directed to the undersigned at (571) 272-3231.

D Wood

Douglas I. Wood
Senior Petitions Attorney
Office of Petitions

---

[2] See 37 CFR 10.18(b) and Changes to Patent Practice and Procedure; Final Rule Notice, 62 Fed. Reg. 53131, 53178 (October 10, 1997), 1208 Off. Gaz. Pat. Office 63, 103 (October 21, 1997).

UNITED STATES PATENT AND TRADEMARK OFFICE

UNITED STATES DEPARTMENT OF COMMERCE
United States Patent and Trademark Office
Address: COMMISSIONER FOR PATENTS
P.O. Box 1450
Alexandria, Virginia 22313-1450
www.uspto.gov

Stolowitz Ford Cowger LLP
621 SW Morrison St
Suite 600
Portland, OR 97205

Mail Date: 04/21/2010

Applicant	: Robert D. Bjornson	: DECISION ON REQUEST FOR
Patent Number	: 7614036	: RECALCULATION of PATENT
Issue Date	: 11/03/2009	: TERM ADJUSTMENT IN VIEW
Appliction No	: 10/610,133	: OF WYETH AND NOTICE OF INTENT TO
Filed	: 06/30/2003	: ISSUE CERTIFICATE OF CORRECTION
		:

The Request for Recalculation is **GRANTED** to the extent indicated.

The patent term adjustment has been determined to be **1688** days. The USPTO will *sua sponte* issue a certificate of correction reflecting the amount of PTA days determined by the recalculation.

Prior to the issuance of the certificate of correction, the USPTO will afford patentee an opportunity to be heard and request reconsideration. Accordingly, patentee has **one month or thirty (30) days**, whichever is longer, to file a request for reconsideration of this patent term adjustment calculation. See 35 U.S.C. 154(b)(3)(B)(ii) and 37 CFR 1.322(a)(4). No extensions of time will be granted under 37 CFR 1.136.

Patentee should use document code PET.OP if electronically filing a request for reconsideration of this patent term adjustment calculation. The patentee must also include the information required by 37 CFR 1.705(b)(2) and the fee required by 37 CFR 1.18(e). If patentee does not file a timely request for reconsideration of this patent term adjustment calculation including the information required by 37 CFR 1.705(b)(2) and the fee required by 37 CFR 1.18(e), the USPTO will issue a certificate of correction reflecting the PTA determination noted above.

Patentee should be aware that in order to preserve the right to review in the United States District Court for the District of Columbia of the USPTO patent term adjustment determination, patentee must ensure that he or she also take the steps required under 35 U.S.C. 154(b)(4)(A) in a timely manner. Nothing in the request for recalculation should be construed as providing an alternative time frame for commencing a civil action under 35 U.S.C. 154(b)(4)(A).

Any questions concerning this decision should be directed to the Office of Patent Legal Administration at 571-272-7702.

UNITED STATES PATENT AND TRADEMARK OFFICE

Commissioner for Patents
United States Patent and Trademark Office
P.O. Box 1450
Alexandria, VA 22313-1450
www.uspto.gov

Date : August 11, 2006

Patent No. :7,076,500
Inventor(s) :Daivd Austin Gallant
Issued :July 7, 2006
Title :SELETIVE FILE CACHING METHOD
Docket No. :CHAP .0103

Re: Request for Certificate of Correction

Consideration has been given your request for the issuance of a certificate of correction for the above-identified patent under the provisions of 37 CFR 1.322 and/or 1.323.

Assignees' names and addresses (assignment data) printed in a patent are based *solely* on information supplied in the appropriate space for identifying the assignment data, i.e., item 3 of the Fee(s) Transmittal Form PTOL-85B. After payment of the issue fee, correction of assignment data submitted on the PTOL-85B can only be done by Certificate of Correction under 37 CFR 1.323, with a request under 37 CFR 3.81(b).

A request for a patent to be corrected to state the name of the assignee must:

A. state that the assignment was submitted for recordation as set forth in 37 CFR 3.11 before issuance of the patent;
B. include a request for a certificate of correction under 37 CFR 1.323 along with the fee set forth in 37 CFR 1.20(a); and
C. include the processing fee set forth in 37 CFR 1.17(i).

If the request is granted, Certificates of Correction Branch will be notified that a Certificate of Correction may be issued.

See Manual of Patent Examining Procedure, Section 1481.01 (Rev. 3) (Oct. 2005).

Applicant has not included items A and or C above, accordingly, the request for Certificate of Correction to add or change the assignee data is dismissed.

Any request under 37 CFR 3.81(b) should be directed to the following address or facsimile number:

By mail: Mail Stop PETITIONS
Commissioner for Patents
Post Office Box 1450
Alexandria, VA 22313-1450

By hand: Customer Service Window
Mail Stop Petitions
Randolph Building
401 Dulany Street
Alexandria, VA 22314

By fax: 571-273-8300
ATTN: Office of Petitions

If a fee (currently $100) was previously submitted for consideration of a Request for Certificate of Correction, under CFR 1.323, to correct assignment data, no additional fee is required.

A certificate of correction will be issued to correct the remaining errors noted in your request. Any inquiry concerning this communication should be directed to Ms. A. Green at (703) 308-9380 ext. 123.

Angel. Green
For Cecelia Newman
Decisions & Certificates
of Correction Branch
(703) 308-9390 or (703) 308- 9380 ext. 123

E. Alan Davis
5828 Van Winkle Lane
Austin, TX 78739

CBN/arg

UNITED STATES PATENT AND TRADEMARK OFFICE

Commissioner for Patents
United States Patent and Trademark Office
P.O. Box 1450
Alexandria, VA 22313-1450
www.uspto.gov

COPY MAILED

FEB 26 2007

OFFICE OF PETITIONS

E. ALAN DAVIS
5828 VAN WINKLE LANE
AUSTIN, TX 78739

In re Patent No. 7,076,500	:	
Issue Date: July 11, 2006	:	
Application No. 10/610,142	:	ON PETITION
Filed: June 30, 2003	:	
Attorney Docket No. CHAP.0103	:	

This is a decision on the petition filed October 4, 2006, under 37 CFR 3.81(b)[1] to correct the assignee on the front page of the above-identified patent by way of a Certificate of Correction.

The petition is granted.

Telephone inquiries concerning this matter may be directed to the undersigned at (571) 272-3208. Any questions concerning the issuance of the Certificate of Correction should be directed to the Certificates of Correction Branch at (703) 305-8309.

The file is being forwarded to the Certificates of Correction Branch for issuance of the requested Certificate of Correction.

Karen Creasy

Karen Creasy
Petitions Examiner
Office of Petitions

[1]See Official Gazette of June 22, 2004

UNITED STATES PATENT AND TRADEMARK OFFICE

UNITED STATES DEPARTMENT OF COMMERCE
United States Patent and Trademark Office
Address: COMMISSIONER FOR PATENTS
P.O. Box 1450
Alexandria, Virginia 22313-1450
www.uspto.gov

MCANDREWS HELD & MALLOY, LTD
500 WEST MADISON STREET
SUITE 3400
CHICAGO, IL 60661

Mail Date: 05/10/2010

Applicant	: Girish Hulmani	: DECISION ON REQUEST FOR
Patent Number	: 7660357	: RECALCULATION of PATENT
Issue Date	: 02/09/2010	: TERM ADJUSTMENT IN VIEW
Application No	: 10/610,149	: OF WYETH AND NOTICE OF INTENT TO
Filed	: 06/30/2003	: ISSUE CERTIFICATE OF CORRECTION
		:

The Request for Recalculation is **GRANTED** to the extent indicated.

The patent term adjustment has been determined to be **426** days. The USPTO will *sua sponte* issue a certificate of correction reflecting the amount of PTA days determined by the recalculation.

Prior to the issuance of the certificate of correction, the USPTO will afford patentee an opportunity to be heard and request reconsideration. Accordingly, patentee has **one month or thirty (30) days**, whichever is longer, to file a request for reconsideration of this patent term adjustment calculation. See 35 U.S.C. 154(b)(3)(B)(ii) and 37 CFR 1.322(a)(4). No extensions of time will be granted under 37 CFR 1.136.

Patentee should use document code PET.OP if electronically filing a request for reconsideration of this patent term adjustment calculation. The patentee must also include the information required by 37 CFR 1.705(b)(2) and the fee required by 37 CFR 1.18(e). If patentee does not file a timely request for reconsideration of this patent term adjustment calculation including the information required by 37 CFR 1.705(b)(2) and the fee required by 37 CFR 1.18(e), the USPTO will issue a certificate of correction reflecting the PTA determination noted above.

Patentee should be aware that in order to preserve the right to review in the United States District Court for the District of Columbia of the USPTO patent term adjustment determination, patentee must ensure that he or she also take the steps required under 35 U.S.C. 154(b)(4)(A) in a timely manner. Nothing in the request for recalculation should be construed as providing an alternative time frame for commencing a civil action under 35 U.S.C. 154(b)(4)(A).

Any questions concerning this decision should be directed to the Office of Patent Legal Administration at 571-272-7702.

UNITED STATES PATENT AND TRADEMARK OFFICE

COMMISSIONER FOR PATENTS
UNITED STATES PATENT AND TRADEMARK OFFICE
P.O. BOX 1450
ALEXANDRIA, VA 22313-1450
www.uspto.gov

CR Miles, P.C.
1 Old Town Square, Suite 200B
Fort Collins, CO 80524

COPY MAILED
FEB 07 2005
OFFICE OF PETITIONS

In re Application of	:	
Vaclav Kirsner	:	
Application No. 10/610,175	:	ON PETITION
Filed: June 30, 2003	:	
Attorney Docket No. KirsnerUSProbe	:	

This is a decision on the petition under 37 CFR 1.137(b), filed December 14, 2004, to revive the above-identified application.

The petition is **GRANTED**.

Telephone inquiries concerning this decision should be directed to the undersigned at (571) 272-3223.

The application file is being referred to the Office of Initial Patent Examination for further processing.

Marianne E. Jenkins
Petitions Examiner
Office of Petitions
Office of the Deputy Commissioner
for Patent Examination Policy

UNITED STATES PATENT AND TRADEMARK OFFICE

Commissioner for Patents
United States Patent and Trademark Office
P.O. Box 1450
Alexandria, VA 22313-1450
www.uspto.gov

STRIKER STRIKER & STENBY
103 EAST NECK ROAD
HUNTINGTON, NY 11743

COPY MAILED

MAY 2 7 2005

OFFICE OF PETITIONS

In re Application of :
Peter Ludwig et al :
Application No. 10/610,197 :
Filed: June 30, 2003 :
Attorney Docket No. 2636 :

ON PETITION

This is a decision on the petition under 37 CFR 1.313 (c)(2), filed May 26, 2005, to withdraw the above-identified application from issue after payment of the issue fee.

The petition is **GRANTED**.

The above-identified application is withdrawn from issue for consideration of a submission under 37 CFR 1.114 (request for continued examination). See 37 CFR 1.313(c)(2).

Petitioner is advised that the issue fee paid on May 16, 2005 in the above-identified application cannot be refunded. If, however, the above-identified application is again allowed, petitioner may request that it be applied towards the issue fee required by the new Notice of Allowance.[1]

Telephone inquiries should be directed to Wan Laymon at (571) 272-3220.

This matter is being referred to Technology Center AU 3651 for processing of the request for continued examination under 37 CFR 1.114.

Wan Laymon
Petitions Examiner
Office of Petitions
Office of the Deputy Commissioner
for Patent Examination Policy

---

[1] The request to apply the issue fee to the new Notice may be satisfied by completing and returning the new Issue Fee Transmittal Form PTOL-85(b), which includes the following language thereon: "Commissioner for Patents is requested to apply the Issue Fee and Publication Fee (if any) or re-apply any previously paid issue fee to the application identified above." Petitioner is advised that, whether a fee is indicated as being due or not, the Issue Fee Transmittal Form **must** be completed and timely submitted to avoid abandonment. Note the language in bold text on the first page of the Notice of Allowance and Fee(s) Due (PTOL-85).

UNITED STATES PATENT AND TRADEMARK OFFICE

Commissioner for Patents
United States Patent and Trademark Office
P.O. Box 1450
Alexandria, VA 22313-1450
www.uspto.gov

MAILED
FROM DIRECTORS OFFICE

OCT 27 2004

TECHNOLOGY CENTER 3600

Maine & Asmus
100 Main Street
P.O. Box 3445
Nashua, NH 03061-3445

In re application of
Glenn J. Joyce et al.
Application No. 10/610,202 :
Filed: June 30, 2003 :
For: CONTROL SYSTEM FOR TRACKING AND TARGETING MULTIPLE AUTONOMOUS OBJECTS :

DECISION ON REQUEST FOR WITHDRAWAL OF ATTORNEY

This is a decision on the request filed on September 01, 2004, under 37 CFR 1.36 and MPEP 402.06, requesting permission to withdraw as the attorney of record in the above-identified application.

The request is **NOT APPROVED**.

Under 37 CFR 1.36 an attorney may withdraw only upon application to and approval by the Commissioner. It should be noted that a withdrawal is effective when approved, not when filed. For approval of such a request the following conditions must be met:

A) Each attorney of record must sign the notice of withdrawal, or the notice must contain a clear indication of one attorney signing on behalf of another, because the Office does not recognize law firms;
B) There must be at least 30 days between approval of the withdrawal and the later of the expiration date of a time period for reply or the expiration date of the period which can be obtained by a petition and fee for extension of time under 37 CFR 1.136(a);
C) A proper reason for the withdrawal as enumerated in 37 CFR 10.40(b) or subsection (1)-(6) of 37 CFR 10.40(c) must be provided;
D) The applicant or patent owner must have been notified of the withdrawal as provided for in 37 CFR 1.36.

10/647,304

The request to withdraw as attorney is not accepted in the above-identified application because the request lacks condition B) above.

As to condition B), The statement included in the request that, "The Attorneys associated with .... represented corporate client Time on Target, Inc., which has dissolved" does not satisfy one of the valid reasons for withdrawal under 37 CFR 10.40 (b)(1)-(4) or (c)(1)-(6). There is no record of client being Time on Target, Inc. The client is assumed to be the inventor who conferred power to the attorneys unless the record indicates otherwise.

Kenneth J. Dorner
Special Programs Examiner
Patent Technology Center 3600
(703) 308-0866
Facsimile No.: (703) 605-0586

KJD/slb:10/19/04

UNITED STATES PATENT AND TRADEMARK OFFICE

Commissioner for Patents
United States Patent and Trademark Office
P.O. Box 1450
Alexandria, VA 22313-1450
www.uspto.gov

Jasper W. Dockrey
BRINKS HOFER GILSON & LIONE
NBC Tower, Suite 3600
P.O. Box 10395
Chicago, IL 60610

NOV 0 8 2005

In re Application of:
LIN et al.
Serial No.: 10/610,253
Filed: June 30, 2003
Attorney Docket No.: **10069/25(L03-005)**

DECISION ON REQUEST TO WITHDRAW FROM RECORD

This is a decision on the request to withdraw as attorney of record under 37 C.F.R. § 1.36, filed April 30, 2005.

The request is **DISMISSED** as moot.

A review of the application file record reveals a proper revocation and power of attorney to the attorneys of Lattice Semiconductor Corporation was filed on March 29, 2005. As such, the power of attorney for the attorneys and agents requesting withdrawal has already been revoked. Accordingly, the present request is moot, and must be dismissed.

All future communications form the Office will continue to be directed to the below-listed address until otherwise notified by applicant.

Inquiries related to this decision should be directed to Clayton E. LaBalle at (571) 272-1594.

Clayton E. LaBalle, Special Programs Examiner
Technology Center 2800
Semiconductors, Electrical and Optical
Systems and Components

cc Lattice Semiconductor Corporation
5555 NE Moore Court
Hillsboro OR 97124-6421

UNITED STATES PATENT AND TRADEMARK OFFICE

UNITED STATES DEPARTMENT OF COMMERCE
United States Patent and Trademark Office
Address: COMMISSIONER FOR PATENTS
P.O. Box 1450
Alexandria, Virginia 22313-1450
www.uspto.gov

PHILIP S. JOHNSON
JOHNSON & JOHNSON
ONE JOHNSON & JOHNSON PLAZA
NEW BRUNSWICK, NJ 08933-7003

Mail Date: 06/14/2010

Applicant	: Jeffrey Michael Ondrla	: DECISION ON REQUEST FOR
Patent Number	: 7615080	: RECALCULATION of PATENT
Issue Date	: 11/10/2009	: TERM ADJUSTMENT IN VIEW
Application No	: 10/610,257	: OF WYETH AND NOTICE OF INTENT TO
Filed	: 06/30/2003	: ISSUE CERTIFICATE OF CORRECTION
		:

The Request for Recalculation is **GRANTED** to the extent indicated.

The patent term adjustment has been determined to be **1320** days. The USPTO will *sua sponte* issue a certificate of correction reflecting the amount of PTA days determined by the recalculation.

Prior to the issuance of the certificate of correction, the USPTO will afford patentee an opportunity to be heard and request reconsideration. Accordingly, patentee has **one month or thirty (30) days**, whichever is longer, to file a request for reconsideration of this patent term adjustment calculation. See 35 U.S.C. 154(b)(3)(B)(ii) and 37 CFR 1.322(a)(4). No extensions of time will be granted under 37 CFR 1.136.

Patentee should use document code PET.OP if electronically filing a request for reconsideration of this patent term adjustment calculation. The patentee must also include the information required by 37 CFR 1.705(b)(2) and the fee required by 37 CFR 1.18(e). If patentee does not file a timely request for reconsideration of this patent term adjustment calculation including the information required by 37 CFR 1.705(b)(2) and the fee required by 37 CFR 1.18(e), the USPTO will issue a certificate of correction reflecting the PTA determination noted above.

Patentee should be aware that in order to preserve the right to review in the United States District Court for the District of Columbia of the USPTO patent term adjustment determination, patentee must ensure that he or she also take the steps required under 35 U.S.C. 154(b)(4)(A) in a timely manner. Nothing in the request for recalculation should be construed as providing an alternative time frame for commencing a civil action under 35 U.S.C. 154(b)(4)(A).

Any questions concerning this decision should be directed to the Office of Patent Legal Administration at 571-272-7702.

UNITED STATES PATENT AND TRADEMARK OFFICE

Commissioner for Patents
United States Patent and Trademark Office
P.O. Box 1450
Alexandria, VA 22313-1450
www.uspto.gov

RICHARD A. RYAN
ATTORNEY AT LAW
8497 N. MILLBROOK AVENUE
SUITE 101
FRESNO CA 93720

COPY MAILED

APR 16 2008

OFFICE OF PETITIONS

In re Application of	:	
Christopher Phillip **GREEN**	:	
Application No. 10/610,259	:	ON PETITION
Filed: June 30, 2008	:	
Attorney Docket No. RAR422.02	:	

This is a decision on the petition under the unintentional provisions of 37 CFR 1.137(b), filed January 22, 2008, to revive the above-identified application.

The petition is **DISMISSED**.

Any request for reconsideration of this decision must be submitted within TWO (2) MONTHS from the mail date of this decision. Extensions of time under 37 CFR 1.136(a) are permitted. The reconsideration request should include a cover letter entitled "Renewed Petition under 37 CFR 1.137(b)." This is **not** a final agency action within the meaning of 5 U.S.C. § 704.

The application became abandoned for failure to timely pay the issue and publication fees on or before February 16, 2006, as required by the Notice of Allowance and Fee(s) Due, mailed November 16, 2005, which set a shortened statutory period for reply of three (3) months. Accordingly, the application became abandoned on February 17, 2006.

A grantable petition under 37 CFR 1.137(b) must be accompanied by: (1) the required reply, unless previously filed; (2) the petition fee as set forth in 37 CFR 1.17(m); (3) a statement that the entire delay in filing the required reply from the due date for the reply until the filing of a grantable petition pursuant to 37 CFR 1.137(b) was unintentional; and (4) any terminal disclaimer (and fee as set forth in 37 CFR 1.20(d)) required by 37 CFR 1.137(d). Where there is a question as to whether either the abandonment or the delay in filing a petition under 37 CFR 1.137 was unintentional, the Director may require additional information. See MPEP 711.03(c)(II)(C) and (D). The instant petition lacks item (2).

An insufficient payment by credit card has been made. As of September 30, 2007, the small inventive entity fee for patent petition under 37 CFR 1.137(b) was $770.00. On January 22, 2008, Petitioner submitted one in the amount of $1,020.00 for the issue fee and the publication fee, and the other of $750 for the petition under 37 CFR 1.137(b). Further, no authorization to charge a deposit account was given. Hence, a difference of $20.00 for the petition fee should be paid.

Further correspondence with respect to this matter should be addressed as follows:

By Mail:	Mail Stop PETITION Commissioner for Patents P. O. Box 1450 Alexandria, VA 22313-1450
By hand:	U. S. Patent and Trademark Office Customer Service Window, Mail Stop Petitions Randolph Building 401 Dulany Street Alexandria, VA 22314
By fax:	(571) 273-8300 ATTN: Office of Petitions

Any questions concerning this matter may be directed to Thuy Pardo at (571) 272-6052 or in her absence, the undersigned at (571) 272-7099.

David A. Buegl
Petitions Examiner
Office of Petitions

UNITED STATES PATENT AND TRADEMARK OFFICE

Commissioner for Patents
United States Patent and Trademark Office
P.O. Box 1450
Alexandria, VA 22313-1450
www.uspto.gov

RICHARD A. RYAN
ATTORNEY AT LAW
8497 N. MILLBROOK AVENUE
SUITE 101
FRESNO CA 93720

COPY MAILED
JUL 3 1 2008

In re Application of	:	
Christopher Phillip **GREEN**	:	
Application No. 10/610,259	:	DECISION ON PETITION
Filed: June 30, 2003	:	
Attorney Docket No. RAR422.02	:	

This is a decision on the renewed petition under the unintentional provisions of 37 CFR 1.137(b), filed April 28, 2008, to revive the above-identified application.

The petition is **GRANTED**.

The application became abandoned for failure to timely pay the issue and publication fees on or before February 16, 2008, as required by the Notice of Allowance and Fee(s) Due, mailed November 16, 2005, which set a statutory period for reply of three (3) months. Accordingly, the application became abandoned on February 17, 2006.

The present petition satisfies the requirements of 37 CFR 1.137(b) in that petitioner has supplied (1) the reply in the form of payment of the issue fee of $720.00 and the publication fee of $300.00, (2) the petition fee of $770.00; and (3) a proper statement of unintentional delay.

Telephone inquiries concerning this decision should be directed to Phyllis Spivack at (571) 272-6051 or in her absence, the undersigned at 571-272-7099.

This application is being referred to the Office of Data Management for processing into a patent.

for David Bucci
Petitions Examiner
Office of Petitions

UNITED STATES PATENT AND TRADEMARK OFFICE

Commissioner for Patents
United States Patent and Trademark Office
P.O. Box 1450
Alexandria, VA 22313-1450
www.uspto.gov

HOUSTON ELISEEVA
4 MILITIA DRIVE, SUITE 4
LEXINGTON MA 02421

COPY MAILED

OCT 2 6 2006

OFFICE OF PETITIONS

ON PETITION

In re Application of :
Stahl :
Application No. 10/610,273 :
Filed: June 30, 2003 :
Attorney Docket No. HEMU02011 :

This is a decision on the petition, filed May 17, 2006, under 37 CFR 1.137(b) to revive the above-identified application.

The above-identified application became abandoned for failure to timely submit a reply within three (3) months of the mailing of the September 23, 2005 final Office action. No response being received and no extensions of time being obtained, this application became abandoned on December 24, 2005. A Notice of Abandonment was mailed on May 8, 2006.

Applicant has submitted an amendment in reply to the September 23, 2005 final Office action, an acceptable statement of the unintentional nature of the delay in responding to the September 23, 2005 final Office action, and the petition fee.

The petition is **GRANTED**.

The Revocation of Power of Attorney with New Power of Attorney and Change of Correspondence Address, filed August 24, 2006, has been entered and made of record. Enclosed, please find various Notices regarding the changes.

After the mailing of this decision the application will be forwarded to Technology Center A.U. 2844 for consideration of the amendment filed on May 17, 2006.

Telephone inquiries should be directed to the undersigned at (571) 272-3230.

Shirene Willis Brantley

Shirene Willis Brantley
Senior Petitions Attorney
Office of Petitions
Office of the Deputy Commissioner
for Patent Examination Policy

Enclosure: Notices regarding change in attorney and correspondence address

UNITED STATES PATENT AND TRADEMARK OFFICE

Commissioner for Patents
United States Patent and Trademark Office
P.O. Box 1450
Alexandria, VA 22313-1450
www.uspto.gov
DIW Nov-06

ARTZ & ARTZ, P.C.
28333 TELEGRAPH ROAD, SUITE 250
SOUTHFIELD MI 48034

COPY MAILED
NOV 1 3 2006
OFFICE OF PETITIONS

In re Application of	:	
Lu et al.	:	DECISION ON PETITION TO
Application No. 10/610,278	:	WITHDRAW HOLDING OF
Filed: 30 June, 2003	:	ABANDONMENT
Attorney Docket No. 202-0468	:	
(FGT 1682 PA)	:	

This is a decision on the petition filed on 31 August, 2005, which is treated as a petition to withdraw the holding of abandonment in the above-identified application.

The Office apologizes for the delay in responding to the present petition.

The petition is **GRANTED**.

The application was held abandoned for failure to timely submit a response to the non-final Office action mailed on 3 November, 2004, which set a three (3) month shortened statutory period for reply. Notice of Abandonment was mailed on 26 August, 2005.

Petitioners assert that a response to the non-final Office action was timely filed by facsimile on 2 February, 2005. In support, petitioner has supplied a copy of an amendment which contains a Certificate Under 37 CFR 1.8 dated 2 February, 2005, signed by registered patent attorney Kevin G. Mierzwa. Petitioner has also supplied a copy of the USPTO's Auto-Reply Facsimile Transmission showing 10 pages, including the cover sheet, were received at the USPTO on 2 February, 2005. A copy of the sending facsimile unit's transmission report was also included.

Any petition to withdraw the holding of abandonment based on a Certificate of Transmission by facsimile must include the following requirements:

(1) A copy of the original response bearing a signed Certificate of Transmission which includes the date of signing; and

(2) A statement under 37 CFR 1.8(b)(3) attesting to the personal knowledge of transmitting the ***original*** response on the date indicated on the Certificate of Transmission (*see* 37 CFR 1.8 and MPEP 512).

The petition, signed by attorney Mierzwa, states that the facsimile response was sent on 2 February, 2005.

A review of the papers filed with the reply to the non-final Office action reveals that the application number was miscaptioned on the transmittal sheet sent on 2 February, 2005, although the amendment in response to the Office action contained the proper application number. Under current Office procedure, a response that has an incorrect serial number is handled in accordance with M.P.E.P. § 508.03. If a paper having an incorrect serial number contains sufficient information to identify the correct application and was timely received at the Office, the holding of abandonment will be withdrawn. In reviewing the papers which were submitted, it is concluded that there was sufficient information thereon to associate the papers with the present application file.

The original response filed on 2 February, 2005, has been located in the Office and has been associated with the present application.

As petitioners have provided convincing evidence that a reply to the Office communication was transmitted to the USPTO on 2 February, 2005, the showing of record is that a response was timely filed, and there is no abandonment in fact. Any inconvenience caused to applicant is regretted.

The holding of abandonment is <u>withdrawn</u>, and the Notice of Abandonment is <u>vacated</u>.

The petition fee paid charged on 31 August, 2005, is unnecessary and will be credited to counsel's deposit account.

The application is being referred to the Technology Center Art Unit 3661 for further processing.

Telephone inquiries concerning this matter may be directed to the undersigned at (571)272-3231.

DWood

Douglas I. Wood
Senior Petitions Attorney
Office of Petitions

UNITED STATES PATENT AND TRADEMARK OFFICE

COMMISSIONER FOR PATENTS
UNITED STATES PATENT AND TRADEMARK OFFICE
P.O. BOX 1450
ALEXANDRIA, VA 22313-1450
www.uspto.gov

KEVIN G. MIERZWA
ARTZ & ARTZ, P.C.
28333 TELEGRAPH ROAD, SUITE 250
SOUTHFIELD MI 48034

COPY MAILED
AUG 25 2005
OFFICE OF PETITIONS

In re Application of :
Jianbo Lu, et al. :
Application No. 10/610,280 : ON PETITION
Filed: June 30, 2003 :
Attorney Docket No.: 202-0491 (FGT 1680 PA) :
:

This is a decision on the petition, filed August 18, 2005, under 37 CFR 1.313(c)(2) to withdraw the above-identified application from issue after payment of the issue fee.

The petition is **GRANTED**.

The above-identified application is withdrawn from issue for consideration of a submission under 37 CFR 1.114 (request for continued examination). See 37 CFR 1.313(c)(2).

Petitioner is advised that the issue fee paid on May 31, 2005, in the above-identified application, cannot be refunded. If, however, the above-identified application is again allowed, petitioner may request that it be applied towards the issue fee required by the new Notice of Allowance. [1]

Telephone inquiries relating to this decision should be directed to the undersigned at (571) 272-3204.

The application is being referred to Technology Center AU 3661 for further processing of the request for continued examination under 37 CFR 1.114.

Sherry D. Brinkley
Petitions Examiner
Office of Petitions

[1]The request to apply the issue fee to the new Notice may be satisfied by completing and returning the new Issue Fee Transmittal Form PTOL-85(b), which includes the following language thereon: "Commissioner for Patents is requested to apply the Issue Fee and Publication Fee (if any) or re-apply any previously paid issue fee to the application identified above." Petitioner is advised that, whether a fee is indicated as being due or not, the Issue Fee Transmittal Form **must** be completed and timely submitted to avoid abandonment. Note the language in bold text on the first page of the Notice of Allowance and Fee(s) Due (PTOL-85).

UNITED STATES PATENT AND TRADEMARK OFFICE

Commissioner for Patents
United States Patent and Trademark Office
P.O. Box 1450
Alexandria, VA 22313-1450
www.uspto.gov

Frank Rosenberg
18 Echo Hill Lane
Moraga CA 94556

COPY MAILED

SEP 29 2005

OFFICE OF PETITIONS

In re Application of :
Tonkovich et al. :
Application No. 10/610,282 : DECISION ON PETITION
Filed: July 1, 2003 :
Attorney Docket No. E-166B-CIP-DIV :

This is a decision on the petition under 37 CFR 1.182, filed June 13, 2005, requesting that the Office withdraw the terminal disclaimer submitted on April 29, 2005.

Petitioners assert that due to an inadvertent error on the part of petitioners, the terminal disclaimer of April 29, 2005, erroneously referenced U.S. Patent No. 6,488,833, instead of U.S. Patent No. 6,488,838. Petitioners have filed a terminal disclaimer correctly referencing U.S. Patent No. 6,488,838 with the present petition on June 13, 2005. Thus, petitioners request that the Office withdraw the erroneously filed terminal disclaimer of April 29, 2005.

The petition is granted.

This matter is being referred to Technology Center Art Unit 1754 for correction of PALM and file records consistent with this decision.

Telephone inquiries relative to this decision should be directed to the undersigned at (571) 272-3211.

Christina T. Donnell

Christina Tartera Donnell
Senior Petitions Attorney
Office of Petitions

UNITED STATES PATENT AND TRADEMARK OFFICE

COMMISSIONER FOR PATENTS
UNITED STATES PATENT AND TRADEMARK OFFICE
P.O. BOX 1450
ALEXANDRIA, VA 22313-1450
www.uspto.gov

MCDONNELL BOEHNEN HULBERT & BERGHOFF, LLP
300 S. WACKER DRIVE
32ND FLOOR
CHICAGO, IL 60606

COPY MAILED
DEC 26 2007
OFFICE OF PETITIONS

In re Patent No. 7,122,526	:	
Issue Date: October 17, 2006	:	
Application No. 10/610,290	:	ON PETITION
Filed: June 30, 2003	:	
Patentee(s): Ze-Qi Xu, et. al.	:	

This is a decision on the petition under 37 CFR 1.183 filed on December 1, 2006, which is being treated as a petition under 37 CFR 3.81[1], to correct the name of the assignee on the front page of the above-identified patent by way of a Certificate of Correction. The delay in responding is regretted.

The petition is **GRANTED**.

This patent file is being forwarded to the Certificates of Correction Branch for issuance of the requested Certificate of Correction.

Telephone inquiries concerning this decision may be directed to the undersigned at (571) 272-3226. Inquiries regarding the issuance of a certificate of correction should be directed to the Certificate of Correction Branch at (703) 305-8309.

Andrea Smith
Petitions Examiner
Office of Petitions

[1] *See* MPEP 1309, subsection II; and Official Gazette of June 22, 2004.

SPE: R. Shukla

SPE RESPONSE FOR CERTIFICATE OF CORRECTION

Paper No.: _____

DATE : 2/9/02

TO SPE OF : ART UNIT 1634

SUBJECT : Request for Certificate of Correction for Appl. No.: 10/610,305 Patent No.: 7232656

Please respond to this request for a certificate of correction within 7 days.

Please review the requested changes/corrections as shown in the **COCIN** document(s) in the IFW application image. No new matter should be introduced, nor should the scope or meaning of the claims be changed.

Please complete the response (see below) and forward the completed response to scanning using document code **COCX**.

Lamonte M. Newsome
Certificates of Correction Branch
703-308-9390 ext. 112

Thank You For Your Assistance

The request for issuing the above-identified correction(s) is hereby:

Note your decision on the appropriate box.

- ☑ **Approved** — All changes apply.
- ☐ **Approved in Part** — Specify below which changes **do not** apply.
- ☐ **Denied** — State the reasons for denial below.

Comments: _____

RAM R. SHUKLA, PH.D.
SUPERVISORY PATENT EXAMINER
SPE

1634
Art Unit

UNITED STATES PATENT AND TRADEMARK OFFICE

Commissioner for Patents
United States Patent and Trademark Office
P.O. Box 1450
Alexandria, VA 22313-1450
www.uspto.gov

MERCHANT & GOULD PC
P.O. BOX 2903
MINNEAPOLIS MN 55402-0903

COPY MAILED

JUL 18 2007

OFFICE OF PETITIONS

In re Application of
Lee J. Monsrud, et al.
Application No. 10/610,330
Filed: June 30, 2003
Attorney Docket No. 163.1565US01

DECISION ON PETITION
TO WITHDRAW
FROM RECORD

This is a decision on the Request to Withdraw as attorney or agent of record under 37 C.F.R. § 1.36(b), filed January 22, 2007.

The request is **DISMISSED** as moot.

A review of the file record indicates that the power of attorney to Merchant & Gould, PC has been revoked by the assignee of the patent application on June 11, 2007. Accordingly, the request to withdraw under 37 C.F.R. § 1.36(b) is moot.

All future communications from the Office will continue to be directed to the below-listed address until otherwise notified by applicant.

Telephone inquires concerning this decision should be directed to undersigned at 571-272-1642.

April M. Wise
Petitions Examiner
Office of Petitions

UNITED STATES PATENT AND TRADEMARK OFFICE

COMMISSIONER FOR PATENTS
UNITED STATES PATENT AND TRADEMARK OFFICE
P.O. BOX 1450
ALEXANDRIA, VA 22313-1450
www.uspto.gov

WEINGARTEN, SCHURGIN, GAGNEBIN & LEBOVICI LLP
Ten Post Office Square
Boston, MA 02109

COPY MAILED

DEC 20 2004

OFFICE OF PETITIONS

ON PETITION

In re Application of	:	
Theodore D. Moustakas	:	
Application No. 10/610,331	:	
Filed: June 30, 2003	:	
Attorney Docket No. BU-014JX	:	

This is a decision on the petition, filed December 17, 2004, under 37 CFR 1.313(c)(2) to withdraw the above-identified application from issue after payment of the issue fee.

The petition is **GRANTED**.

The above-identified application is withdrawn from issue for consideration of a submission under 37 CFR 1.114 (request for continued examination). See 37 CFR 1.313(c)(2).

Petitioner is advised that the issue fee paid on December 2, 2004, in the above-identified application cannot be refunded. If, however, the above-identified application is again allowed, petitioner may request that it be applied towards the issue fee required by the new Notice of Allowance. [1]

Telephone inquiries relating to this decision should be directed to the undersigned at (571) 272-3204.

The application is being referred to Technology Center AU 2815 for further processing of the request for continued examination under 37 CFR 1.114 filed December 17, 2004.

Sherry D. Brinkley
Petitions Examiner
Office of Petitions
Office of the Deputy Commissioner
for Patent Examination Policy

[1]The request to apply the issue fee to the new Notice may be satisfied by completing and returning the new Issue Fee Transmittal Form PTOL-85(b), which includes the following language thereon: "Commissioner for Patents is requested to apply the Issue Fee and Publication Fee (if any) or re-apply any previously paid issue fee to the application identified above." Petitioner is advised that, whether a fee is indicated as being due or not, the Issue Fee Transmittal Form **must** be completed and timely submitted to avoid abandonment. Note the language in bold text on the first page of the Notice of Allowance and Fee(s) Due (PTOL-85).

UNITED STATES PATENT AND TRADEMARK OFFICE

Commissioner for Patents
United States Patent and Trademark Office
P.O. Box 1450
Alexandria, VA 22313-1450
www.uspto.gov

APPLIED BIOSYSTEMS
500 OLD CONNECTICUT PATH
FRAMINGHAM MA 01701

COPY MAILED

APR 10 2007

OFFICE OF PETITIONS

In re Application of	:	
Gildea et al.	:	
Application No. 10/610,337	:	ON PETITION
Filed: June 30, 2003	:	
Attorney Docket No. BP9703US-DV2	:	

This is a decision on the petition under 37 C.F.R. § 1.137(b), filed February 27, 2007, to revive the above-identified application.

The petition is **GRANTED.**

The petition satisfies the conditions for revival pursuant to the provisions of 37 CFR 1.137(b) in that (1) the reply in the form of the requisite fees as listed in the Notice to File Missing Parts of Nonprovisional Application; (2) the petition fee; and (3) the required statement of unintentional delay have been received. Accordingly, the response has been accepted as having been unintentionally delayed.

The above-identified application has been abandoned for an extended period of time. The Patent and Trademark Office is relying on petitioner's duty of candor and good faith and accepting the statement that the entire delay in filing the required reply from the due date for the reply until the filing of a grantable petition pursuant to 37 CFR 1.137(b) was unintentional.[1]

This matter is being referred to the Office of Initial Patent Examination for further processing.

Telephone inquiries regarding this decision should be directed to the undersigned at (571) 272-3206.

Liana Walsh
Petitions Examiner
Office of Petitions

[1] See Changes to Patent Practice and Procedure, 62 Fed. Reg. at 53160 and 53178; 1203 Off. Gaz. Pat. Office at 88 and 103 (responses to comments 64 and 109) (applicant obligated under 37 CFR 10.18 to inquire into the underlying facts and circumstances when providing the statement required by 37 CFR 1.137(b) to the Patent and Trademark Office).

UNITED STATES PATENT AND TRADEMARK OFFICE

Commissioner for Patents
United States Patent and Trademark Office
P.O. Box 1450
Alexandria, VA 22313-1450
www.uspto.gov

APPLIED BIOSYSTEMS
500 OLD CONNECTICUT PATH
FRAMINGHAM MA 01701

COPY MAILED

APR 10 2007

OFFICE OF PETITIONS

In re Application of	:	
Coull et al.	:	
Application No. 10/610,337	:	ON PETITION
Filed: June 30, 2003	:	
Attorney Docket No. BP9803US-DV1	:	

This is a decision on the petition under 37 C.F.R. § 1.137(b), filed February 26, 2007, to revive the above-identified application.

The petition is **GRANTED.**

The petition satisfies the conditions for revival pursuant to the provisions of 37 CFR 1.137(b) in that (1) the reply in the form of the requisite fees as listed in the Notice to File Missing Parts of Nonprovisional Application; (2) the petition fee; and (3) the required statement of unintentional delay have been received. Accordingly, the response has been accepted as having been unintentionally delayed.

The above-identified application has been abandoned for an extended period of time. The Patent and Trademark Office is relying on petitioner's duty of candor and good faith and accepting the statement that the entire delay in filing the required reply from the due date for the reply until the filing of a grantable petition pursuant to 37 CFR 1.137(b) was unintentional.[1]

This matter is being referred to the Office of Initial Patent Examination for further processing.

Telephone inquiries regarding this decision should be directed to the undersigned at (571) 272-3206.

Liana Walsh
Petitions Examiner
Office of Petitions

[1] See Changes to Patent Practice and Procedure, 62 Fed. Reg. at 53160 and 53178; 1203 Off. Gaz. Pat. Office at 88 and 103 (responses to comments 64 and 109) (applicant obligated under 37 CFR 10.18 to inquire into the underlying facts and circumstances when providing the statement required by 37 CFR 1.137(b) to the Patent and Trademark Office).

UNITED STATES PATENT AND TRADEMARK OFFICE

Commissioner for Patents
United States Patent and Trademark Office
P.O. Box 1450
Alexandria, VA 22313-1450
www.uspto.gov

APPLIED BIOSYSTEMS
500 OLD CONNECTICUT PATH
FRAMINGHAM MA 01701

MAILED

APR 10 2007

OFFICE OF PETITIONS

In re Application of	:	
Coull et al.	:	
Application No. 10/610,338[1]	:	ON PETITION
Filed: June 30, 2003	:	
Attorney Docket No. BP9803US-DV1	:	

CORRECTED DECISION

This is a decision on the petition under 37 C.F.R. § 1.137(b), filed February 26, 2007, to revive the above-identified application.

The petition is **GRANTED.**

The petition satisfies the conditions for revival pursuant to the provisions of 37 CFR 1.137(b) in that (1) the reply in the form of the requisite fees as listed in the Notice to File Missing Parts of Nonprovisional Application; (2) the petition fee; and (3) the required statement of unintentional delay have been received. Accordingly, the response has been accepted as having been unintentionally delayed.

The above-identified application has been abandoned for an extended period of time. The Patent and Trademark Office is relying on petitioner's duty of candor and good faith and accepting the statement that the entire delay in filing the required reply from the due date for the reply until the filing of a grantable petition pursuant to 37 CFR 1.137(b) was unintentional.[2]

This matter is being referred to the Office of Initial Patent Examination for further processing.

Telephone inquiries regarding this decision should be directed to the undersigned at (571) 272-3206.

/Liana Walsh/
Liana Walsh
Petitions Examiner
Office of Petitions

---

[1] Corrected Decision: The original petition decision mailed April 10, 2007 incorrectly listed Application No. 10/610,337, rather than the proper Application No. 10/610,338.

[2] See Changes to Patent Practice and Procedure, 62 Fed. Reg. at 53160 and 53178; 1203 Off. Gaz. Pat. Office at 88 and 103 (responses to comments 64 and 109) (applicant obligated under 37 CFR 10.18 to inquire into the underlying facts and circumstances when providing the statement required by 37 CFR 1.137(b) to the Patent and Trademark Office).

UNITED STATES PATENT AND TRADEMARK OFFICE

UNITED STATES DEPARTMENT OF COMMERCE
United States Patent and Trademark Office
Address: COMMISSIONER FOR PATENTS
P.O. Box 1450
Alexandria, Virginia 22313-1450
www.uspto.gov

SONNENSCHEIN NATH & ROSENTHAL LLP
P.O. BOX 061080
WACKER DRIVE STATION, WILLIS TOWER
CHICAGO, IL 60606-1080

Mail Date: 04/21/2010

Applicant	: Richard A. Dixon	: DECISION ON REQUEST FOR
Patent Number	: 7622638	: RECALCULATION of PATENT
Issue Date	: 11/24/2009	: TERM ADJUSTMENT IN VIEW
Appliction No	: 10/610,351	: OF WYETH AND NOTICE OF INTENT TO
Filed	: 06/30/2003	: ISSUE CERTIFICATE OF CORRECTION
		:

The Request for Recalculation is **GRANTED** to the extent indicated.

The patent term adjustment has been determined to be **1715** days. The USPTO will *sua sponte* issue a certificate of correction reflecting the amount of PTA days determined by the recalculation.

Prior to the issuance of the certificate of correction, the USPTO will afford patentee an opportunity to be heard and request reconsideration. Accordingly, patentee has **one month or thirty (30) days**, whichever is longer, to file a request for reconsideration of this patent term adjustment calculation. See 35 U.S.C. 154(b)(3)(B)(ii) and 37 CFR 1.322(a)(4). No extensions of time will be granted under 37 CFR 1.136.

Patentee should use document code PET.OP if electronically filing a request for reconsideration of this patent term adjustment calculation. The patentee must also include the information required by 37 CFR 1.705(b)(2) and the fee required by 37 CFR 1.18(e). If patentee does not file a timely request for reconsideration of this patent term adjustment calculation including the information required by 37 CFR 1.705(b)(2) and the fee required by 37 CFR 1.18(e), the USPTO will issue a certificate of correction reflecting the PTA determination noted above.

Patentee should be aware that in order to preserve the right to review in the United States District Court for the District of Columbia of the USPTO patent term adjustment determination, patentee must ensure that he or she also take the steps required under 35 U.S.C. 154(b)(4)(A) in a timely manner. Nothing in the request for recalculation should be construed as providing an alternative time frame for commencing a civil action under 35 U.S.C. 154(b)(4)(A).

Any questions concerning this decision should be directed to the Office of Patent Legal Administration at 571-272-7702.

UNITED STATES PATENT AND TRADEMARK OFFICE

Commissioner for Patents
United States Patent and Trademark Office
P.O. Box 1450
Alexandria, VA 22313-1450
www.uspto.gov

JJGJR.: 07-06

Paper No: __

HAMILTON, BROOK,
SMITH & REYNOLDS, P.C.
530 VIRGINIA ROAD
P.O. BOX 9133
CONCORD MA 01742-9133

COPY MAILED

JUL 24 2006

OFFICE OF PETITIONS

In re Application of :
O'Neil :
Application No. 10/610,369 : DECISION
Filing Date: 30 June, 2003 :
Attorney Docket No.: 3518.1011-000

This is a decision on the petition filed on 19 May, 2006, requesting withdrawal of the holding of abandonment under 37 C.F.R. §1.181.

For the reasons set forth below, the petition considered under 37 C.F.R.§1.181 is **DISMISSED.**

NOTES:

Monitoring of the status of applications on PAIR can inform one's management of application responses and provide an indication when mailings of Office actions should be expected.

Moreover, Status Inquiries filed at three (3) or four (4) month intervals provide a demonstration of diligence and attention in supporting a petition seeking relief under 37 C.F.R. §1.181.

(1) Any petition (and fee) for reconsideration of this decision must be submitted within two (2) months from the mail date of this decision. Extensions of time under 37 C.F.R. §1.136(a) are permitted. The reconsideration request should

include a cover letter entitled "Renewed Petition under 37 C.F.R. §1.181."

(If Petitioner is unable to present even a satisfactory showing to support a petition under 37 C.F.R. §1.137(a), Petitioner's only alternative will be to file a petition under 37 C.F.R. §1.137(b).)

(2) Thereafter, there will be no further reconsideration of this matter.[1]

BACKGROUND

The record reflects that:

- Petitioner failed to reply timely and properly to the non-final Office action mailed on7 April, 2005, with reply due under a non-extendable deadline on or 7 July, 2005;
- Petitioner filed an amendment with request and fee for extension of time on 9 September, 2005;
- the Office mailed a Notice of Non-compliant Amendment on 29 November, 2006 (the November, 2005 Notice), and reminded Petitioner that he had a reply period one (1) month or thirty (30) days, whichever was longer (i.e., until 29 December, 2005)–the maximum statutory period having already expired;
- the instant application went abandoned after midnight 29 December, 2005;
- the Office mailed a Notice of Abandonment on 3 April, 2006;
- on 19 May Petitioner filed the instant request to withdraw the holding of abandonment, requested an extension of time and averred the filing of a divisional application (see: guidance at MPEP §711.03(c))–on 29 January, 2006, nearly ten months after the Office action, two months after the November, 2005 Notice, and one month after abandonment.

While Petitioner avers the instant application was not abandoned, Petitioner clearly abandoned the parent in favor of the child. (See also: MPEP §711.03(c)(II)(2)(e).)

---

[1] For more than a century, punctuality and due diligence, equally with good faith, have been deemed essential requisites to the success of those who seek to obtain the special privileges of the patent law, and they are demanded in the interest of the public and for the protection of rival inventors. See: Porter v. Louden, 7 App.D.C. 64 (C.A.D.C. 1895), citing Wollensak v. Sargent, 151 U.S. 221, 228, 38 L. Ed. 137, 14 S. Ct. 291 (1894). An invention benefits no one unless it is made public, and the rule of diligence should be so applied as to encourage reasonable promptness in conferring this benefit upon the public. Automatic Electric Co. v. Dyson, 52 App. D.C. 82; 281 F. 586 (C.A.D.C. 1922). Generally, 35 U.S.C. §6; 37 C.F.R.§§1.181, 182, 183.

Further, the provisions of 37 C.F.R. §1.181 require that the regulation be invoked within two (2) months of the event complained of (i.e., the abandonment)..

Out of an abundance of caution, Petitioners always are reminded that:

- the filing of a petition under 37 C.F.R. §1.181 does not toll any periods that may be running any action by the Office and a petition seeking relief under the regulation must be filed within two (2) months of the act complained of (see: 37 C.F.R. §1.181(f)); and

- those registered to practice *and* all others who make representations before the Office are reminded to inquire into the underlying facts of representations made to the Office and support averments with the appropriate documentation–since all owe to the Office the continuing duty to disclose.[2]

---

[2] See supplement of 17 June, 1999. The Patent and Trademark Office is relying on petitioner's duty of candor and good faith and accepting a statement made by Petitioner. See Changes to Patent Practice and Procedure, 62 Fed. Reg. at 53160 and 53178, 1203 Off. Gaz. Pat. Office at 88 and 103 (responses to comments 64 and 109)(applicant obligated under 37 C.F.R. §10.18 to inquire into the underlying facts and circumstances when providing statements to the Patent and Trademark Office).

Specifically, the regulations at 37 C.F.R. §10.18 provide:

§ 10.18 Signature and certificate for correspondence filed in the Patent and Trademark Office.
(a) For all documents filed in the Office in patent, trademark, and other non-patent matters, except for correspondence that is required to be signed by the applicant or party, each piece of correspondence filed by a practitioner in the Patent and Trademark Office must bear a signature by such practitioner complying with the provisions of §1.4(d), §1.4(e), or § 2.193(c)(1) of this chapter.
(b) By presenting to the Office (whether by signing, filing, submitting, or later advocating) any paper, the party presenting such paper, whether a practitioner or non-practitioner, is certifying that—
(1) All statements made therein of the party's own knowledge are true, all statements made therein on information and belief are believed to be true, and all statements made therein are made with the knowledge that whoever, in any matter within the jurisdiction of the Patent and Trademark Office, knowingly and willfully falsifies, conceals, or covers up by any trick, scheme, or device a material fact, or makes any false, fictitious or fraudulent statements or representations, or makes or uses any false writing or document knowing the same to contain any false, fictitious or fraudulent statement or entry, shall be subject to the penalties set forth under 18 U.S.C. 1001, and that violations of this paragraph may jeopardize the validity of the application or document, or the validity or enforceability of any patent, trademark registration, or certificate resulting therefrom; and
(2) To the best of the party's knowledge, information and belief, formed after an inquiry reasonable under the circumstances, that —
(i) The paper is not being presented for any improper purpose, such as to harass someone or to cause unnecessary delay or needless increase in the cost of prosecution before the Office;
(ii) The claims and other legal contentions therein are warranted by existing law or by a nonfrivolous argument for the extension, modification, or reversal of existing law or the establishment of new law;
(iii) The allegations and other factual contentions have evidentiary support or, if specifically so identified, are likely to have evidentiary support after a reasonable opportunity for further investigation or discovery; and
(iv) The denials of factual contentions are warranted on the evidence, or if specifically so identified, are reasonably based on a lack of information or belief.
(c) Violations of paragraph (b)(1) of this section by a practitioner or non-practitioner may jeopardize the validity of the application or document, or the validity or enforceability of any patent, trademark registration, or certificate resulting therefrom. Violations of any of paragraphs (b)(2)(i) through (iv) of this section are, after notice and reasonable opportunity to respond, subject to such sanctions as deemed appropriate by the Commissioner, or the Commissioner's designee, which may include, but are not limited to, any combination of —
(1) Holding certain facts to have been established;
(2) Returning papers;
(3) Precluding a party from filing a paper, or presenting or contesting an issue;
(4) Imposing a monetary sanction;
(5) Requiring a terminal disclaimer for the period of the delay; or
(6) Terminating the proceedings in the Patent and Trademark Office.
(d) Any practitioner violating the provisions of this section may also be subject to disciplinary action. See § 10.23(c)(15).
[Added 50 FR 5175, Feb. 6, 1985, effective Mar. 8, 1985; para. (a) revised, 58 FR 54494, Oct. 22, 1993, effective Nov. 22, 1993; paras. (a) &

STATUTES, REGULATIONS AND ANALYSIS

Congress has authorized the Commissioner to "revive an application if the delay is shown to the satisfaction of the Commissioner to have been "unavoidable." 35 U.S.C. §133 (1994).[3]

The regulations at 37 C.F.R. §1.137(a) and (b) set forth the requirements for a petitioner to revive a previously unavoidably or unintentionally, respectively, abandoned application under this congressional grant of authority. The language of 35 U.S.C. §133 and 37 C.F.R. §1.137(a) is clear, unambiguous, and without qualification: the delay in tendering the reply to the outstanding Office action, as well as filing the first petition seeking revival, must have been unavoidable for the reply now to be accepted on petition.[4]

Delays in responding properly raise the question whether delays are unavoidable.[5] Where there is a question whether the delay was unavoidable, Petitioners must meet the burden of establishing that the delay was unavoidable within the meaning of 35 U.S.C. §133 and 37 C.F.R. §1.137(a).[6] And the Petitioner must be diligent in attending to the matter.[7] Failure to do so does not constitute the care required under Pratt, and so cannot satisfy the test for diligence and due care.

(By contrast, unintentional delays are those that do not satisfy the very strict statutory and regulatory requirements of unavoidable delay, and also, by definition, are not intentional.[8]))

(b) revised, paras. (c) & (d) added, 62 FR 53131, Oct. 10, 1997, effective Dec. 1, 1997; para. (a) revised, 69 FR 56481, Sept. 21, 2004, effective Oct. 21, 2004]

[3] 35 U.S.C. §133 provides:
35 U.S.C. §133 Time for prosecuting application.
Upon failure of the applicant to prosecute the application within six months after any action therein, of which notice has been given or mailed to the applicant, or within such shorter time, not less than thirty days, as fixed by the Commissioner in such action, the application shall be regarded as abandoned by the parties thereto, unless it be shown to the satisfaction of the Commissioner that such delay was unavoidable.

[4] Therefore, by example, an unavoidable delay in the payment of the Filing Fee might occur if a reply is shipped by the US Postal Service, but due to catastrophic accident, the delivery is not made.

[5] See: *Changes to Patent Practice and Procedure*; *Final Rule Notice*, 62 *Fed. Reg.* at 53158-59 (October 10, 1997), 1203 *Off. Gaz. Pat. Office* at 86-87 (October 21, 1997).

[6] See: In re Application of G, 11 USPQ2d 1378, 1380 (Comm'r Pats. 1989).

[7] See: Diligence in Filing Petitions to Revive and Petitions to Withdraw the Holding of Abandonment, 1124 Off. Gaz. Pat. Office 33 (March 19, 1991). It was and is Petitioner's burden to exercise diligence in seeking either to have the holding of abandonment withdrawn or the application revived. See 1124 Off. Gaz. Pat. Office supra.

[8] Therefore, by example, an unintentional delay in the reply might occur if the reply and transmittal form are to be prepared for shipment by the US Postal Service, but other pressing matters distract one's attention and the mail is not timely deposited for shipment.

Allegations as to the Request to
Withdraw the Holding of Abandonment

The courts have determined the construct for properly supporting a petition seeking withdrawal of a holding of abandonment:[9]

Further, the commentary at MPEP §711.03(c) also provides:

* * *

B. Petition To Withdraw Holding of Abandonment Based on Evidence That a Reply Was Timely Mailed or Filed

37 C.F.R. §1.10(c) through §1.10(e) and §1.10(g) set forth procedures for petitioning the Director of the USPTO to accord a filing date to correspondence as of the date of deposit of the correspondence as "Express Mail." A petition to withdraw the holding of abandonment relying upon a timely reply placed in "Express Mail" must include an appropriate petition under 37 C.F.R. §1.10(c), (d), * (e), or (g) (see MPEP § 513). When a paper is shown to have been mailed to the Office using the "Express Mail" procedures, the paper must be entered in PALM with the "Express Mail" date.

Similarly, applicants may establish that a reply was filed with a postcard receipt that properly identifies the reply and provides *prima facie* evidence that the reply was timely filed. See MPEP § 503. For example, if the application has been held abandoned for failure to file a reply to a first Office action, and applicant has a postcard receipt showing that an amendment was timely filed in response to the Office action, then the holding of abandonment should be withdrawn upon the filing of a petition to withdraw the holding of abandonment. When the reply is shown to have been timely filed based on a postcard receipt, the reply must be entered into PALM using the date of receipt of the reply as shown on the post card receipt.

Where a certificate of mailing under 37 C.F.R. §1.8, but not a postcard receipt, is relied upon in a petition to withdraw the holding of abandonment, see 37 C.F.R. §1.8(b) and MPEP § 512. As stated in 37 C.F.R §1.8(b)(3) the statement that attests to the previous timely mailing or transmission of the correspondence must be on a personal knowledge basis, or to the satisfaction of the Director of the USPTO. If the statement attesting to the previous timely mailing is not made by the person who signed the Certificate of Mailing (i.e., there is no personal

---

[9] See: Delgar v. Schulyer, 172 USPQ 513 (D.D.C. 1971).

knowledge basis), then the statement attesting to the previous timely mailing should include evidence that supports the conclusion that the correspondence was actually mailed (e.g., copies of a mailing log establishing that correspondence was mailed for that application). When the correspondence is shown to have been timely filed based on a certificate of mailing, the correspondence is entered into PALM with the actual date of receipt (i.e., the date that the duplicate copy of the papers was filed with the statement under 37 C.F.R. §1.8).

37 C.F.R. §1.8(b) also permits applicant to notify the Office of a previous mailing or transmission of correspondence and submit a statement under 37 C.F.R. 1.8(b)(3) accompanied by a duplicate copy of the correspondence when a reasonable amount of time (e.g., more than one month) has elapsed from the time of mailing or transmitting of the correspondence. Applicant does not have to wait until the application becomes abandoned before notifying the Office of the previous mailing or transmission of the correspondence. Applicant should check the private Patent Application Information Retrieval (PAIR) system for the status of the correspondence before notifying the Office. See MPEP § 512.

* * *

And the regulation (37 C.F.R. §1.181[10]) requires that relief be sought within two (2) months of the act complained of.

---

[10] The regulations at 37 C.F.R. §1.181 provide:

§ 1.181 Petition to the Director.

<>

(a) Petition may be taken to the Director:

(1) From any action or requirement of any examiner in the *ex parte* prosecution of an application, or in *ex parte* or *inter partes* prosecution of a reexamination proceeding which is not subject to appeal to the Board of Patent Appeals and Interferences or to the court;

(2) In cases in which a statute or the rules specify that the matter is to be determined directly by or reviewed by the Director; and

(3) To invoke the supervisory authority of the Director in appropriate circumstances. For petitions involving action of the Board of Patent Appeals and Interferences, see § 41.3 of this title.

(b) Any such petition must contain a statement of the facts involved and the point or points to be reviewed and the action requested. Briefs or memoranda, if any, in support thereof should accompany or be embodied in the petition; and where facts are to be proven, the proof in the form of affidavits or declarations (and exhibits, if any) must accompany the petition.

(c) When a petition is taken from an action or requirement of an examiner in the *ex parte* prosecution of an application, or in the *ex parte* or *inter partes* prosecution of a reexamination proceeding, it may be required that there have been a proper request for reconsideration (§ 1.111) and a repeated action by the examiner. The examiner may be directed by the Director to furnish a written statement, within a specified time, setting forth the reasons for his or her decision upon the matters averred in the petition, supplying a copy to the petitioner.

(d) Where a fee is required for a petition to the Director the appropriate section of this part will so indicate. If any required fee does not accompany the petition, the petition will be dismissed.

(e) Oral hearing will not be granted except when considered necessary by the Director.

(f) The mere filing of a petition will not stay any period for reply that may be running against the application, nor act as a stay of other proceedings. Any petition under this part not filed within two months of the mailing date of the action or notice from which relief is requested may be dismissed as untimely, except as otherwise provided. This two-month period is not extendable.

(g) The Director may delegate to appropriate Patent and Trademark Office officials the determination of petitions.

[24 FR 10332, Dec. 22, 1959; 34 FR 18857, Nov. 26, 1969; paras. (d) and (g), 47 FR 41278, Sept. 17, 1982, effective Oct. 1, 1982; para. (a), 49 FR 48416, Dec. 12, 1984, effective Feb. 11, 1985; para. (f) revised, 65 FR 54604, Sept. 8, 2000, effective Nov. 7, 2000; paras. (a) and (c) revised, 65 FR 76756, Dec. 7, 2000, effective Feb. 5, 2001; paras. (a), (a)(2)-(3), (c)-(e) & (g) revised, 68 FR 14332, Mar. 25, 2003, effective May 1, 2003; para. (a)(3) revised, 69 FR 49959, Aug. 12, 2004, effective Sept. 13, 2004]

Again, Petitioner:

- abandoned the instant application in favor of the child; and
- failed to comply with either the statutory time for reply or the additional one-(1-) month period set out in the November, 2005, Notice.

Thus, as of this writing Petitioner appears not to have satisfied and not to be able to satisfy the "showing" requirements described above.

CONCLUSION

Because it appears that Petitioner has not satisfied the burdens set forth in Delgar v. Schulyer, the petition as considered under 37 C.F.R. §1.181 hereby is **dismissed**.

ALTERNATIVE VENUE

Petitioner's only alternative to irretrievable abandonment may be petition alleging unintentional delay under 37 C.F.R. §1.137(b).[11]

Petitioner may wish to file such a petition to the Commissioner requesting revival of an application abandoned due to unintentional delay. (See: http://www.uspto.gov/web/offices/pac/mpep/documents/0700_711_03_c.htm#sect711.03c)

A petition to revive on the grounds of unintentional delay must be filed promptly and such petition must be accompanied by the reply (the amendment), the petition fee, and a statement that "the entire delay in filing the required reply from the due date for the reply until the filing of a grantable petition was unintentional." (The statement is in the form available online.)

Further correspondence with respect to this matter should be addressed as follows:[12]

---

[11] The regulations at 37 C.F.R. §1.183 sets forth that waiver of the rules is "subject to such other requirements as may be imposed."

[12] On July 15, 2005, the Central Facsimile (FAX) Number changed to (571) 273-8300. The old FAX number no longer is in service and (571) 273-8300 will be the only facsimile number recognized for centralized delivery. (For further information. see: http://www.uspto.gov/web/offices/pac/dapp/opla/preognotice/cfax062005.pdf .)

By mail: Commissioner for Patents[13]
P.O. Box 1450
Alexandria, VA 22313-1450

By FAX: IFW Formal Filings
(571) 273-8300
ATTN.: Office of Petitions

By hand: Mail Stop: Petition
Customer Service Window
Randolph Building
401 Dulany Street
Alexandria, VA 22314

Telephone inquiries concerning this decision may be directed to the undersigned at (571) 272-3214.

John J. Gillon, Jr.
Senior Attorney
Office of Petitions

[13] To determine the appropriate addresses for other subject-specific correspondence, refer to the USPTO Web site at www.uspto.gov.

UNITED STATES PATENT AND TRADEMARK OFFICE

Commissioner for Patents
United States Patent and Trademark Office
P.O. Box 1450
Alexandria, VA 22313-1450
www.uspto.gov

JJGJR.: 07-07

Paper No: __

COPY MAILED

AUG 0 6 2007

OFFICE OF PETITIONS

NUTTER MCCLENNEN & FISH LLP
WORLD TRADE CENTER WEST
155 SEAPORT BOULEVARD
BOSTON MA 02210-2604

In re Application of :
O'Neil :
Application No. 10/610,369 : DECISION
Filing Date: 30 June, 2003 :
Attorney Docket No.: 3518.1011-000

This is a decision on the renewed petition filed on 11 August, 2006, requesting withdrawal of the holding of abandonment under 37 C.F.R. §1.181.

The Office regrets the delay in addressing this matter, however, the petition was presented to the attorneys in the Office of Petitions only at this writing.[1]

For the reasons set forth below, the petition considered under 37 C.F.R.§1.181 is **GRANTED.**

BACKGROUND

The record reflects that:

- Petitioner (prior Counsel) failed to reply timely and properly to the non-final Office action mailed on 7 April, 2005, with reply due absent extension of time on or 7 July, 2005;

[1] **NOTE: Monitoring of the status of applications on PAIR can inform one's management of application responses and provide an indication when mailings of Office actions should be expected. Status Inquiries filed at three (3) or four (4) month intervals provide a demonstration of diligence and attention in supporting a petition seeking relief under 37 C.F.R. §1.181.**

- Petitioner filed an amendment with request and fee for extension of time on 9 September, 2005;

- the Office mailed a Notice of Non-compliant Amendment on 29 November, 2005 (the November, 2005 Notice), and reminded Petitioner that he had a reply period one (1) month or thirty (30) days, whichever was longer (i.e., until 29 December, 2005)–the maximum statutory period on the 7 April, 2005, having already expired–the Notice did, however, suggest that extensions of time might be available under 37 C.F.R.§1.136 as to this new action;

- it appears that the Office deemed that the instant application went abandoned after midnight 29 December, 2005;

- the Office mailed a Notice of Abandonment on 3 April, 2006, and the Examiner also perpetuated via an Interview Summary a conversation of 28 March, 2006, with (prior) Counsel that it was understood the application was abandoned by operation of law for failure to file a reply on or before 29 December, 2005;

- on 19 May, 2006, Petitioner (prior Counsel) filed, *inter alia*, filed the original request to withdraw the holding of abandonment, requested an extension of time and averred the filing of a divisional application (nearly six months after the November, 2005 Notice, and roughly six weeks after Notice of Abandonment)–and <u>in light of the Examiner's Interview Summary and absent further detail by Petitioner (prior Counsel)</u>, the petition was dismissed on 24 July, 2006, for failing to provide a sufficient showing in the matter;[2]

- the instant petition was filed in an effort to overcome the prior deficiency and addresses Petitioner's misunderstanding in that: (a) he avers he appreciated, possibly in error, that co-pendency existed between the applications at the time of the filing of the divisional application; and (b) the period of reply to the 29 November, 2005, Office action was extendable to 29 May, 2006, and that a request with fee for such extension was timely filed on 19 May, 2006.

Previously, Petitioner (prior Counsel) failed to expressly aver that the statement of abandonment set forth in the Interview Summary (3 April, 2006) was incomplete, and did not wholly reflect Petitioner's appreciation, intent and/or expression thereof.

Out of an abundance of caution, Petitioners always are reminded that:

---

[2] <u>See also</u>: guidance at MPEP §711.03(c), and §711.03(c)(II)(2)(e).

- the filing of a petition under 37 C.F.R. §1.181 does not toll any periods that may be running any action by the Office and a petition seeking relief under the regulation must be filed within two (2) months of the act complained of (see: 37 C.F.R. §1.181(f)); and

- those registered to practice *and* all others who make representations before the Office are reminded to inquire into the underlying facts of representations made to the Office and support averments with the appropriate documentation–since all owe to the Office the continuing duty to disclose.[3]

STATUTES, REGULATIONS AND ANALYSIS

---

[3] See supplement of 17 June, 1999. The Patent and Trademark Office is relying on petitioner's duty of candor and good faith and accepting a statement made by Petitioner. See Changes to Patent Practice and Procedure, 62 Fed. Reg. at 53160 and 53178, 1203 Off. Gaz. Pat. Office at 88 and 103 (responses to comments 64 and 109)(applicant obligated under 37 C.F.R. §10.18 to inquire into the underlying facts and circumstances when providing statements to the Patent and Trademark Office).

Specifically, the regulations at 37 C.F.R. §10.18 provide:

§ 10.18 Signature and certificate for correspondence filed in the Patent and Trademark Office.
(a) For all documents filed in the Office in patent, trademark, and other non-patent matters, except for correspondence that is required to be signed by the applicant or party, each piece of correspondence filed by a practitioner in the Patent and Trademark Office must bear a signature by such practitioner complying with the provisions of §1.4(d), §1.4(e), or § 2.193(c)(1) of this chapter.
(b) By presenting to the Office (whether by signing, filing, submitting, or later advocating) any paper, the party presenting such paper, whether a practitioner or non-practitioner, is certifying that—
(1) All statements made therein of the party's own knowledge are true, all statements made therein on information and belief are believed to be true, and all statements made therein are made with the knowledge that whoever, in any matter within the jurisdiction of the Patent and Trademark Office, knowingly and willfully falsifies, conceals, or covers up by any trick, scheme, or device a material fact, or makes any false, fictitious or fraudulent statements or representations, or makes or uses any false writing or document knowing the same to contain any false, fictitious or fraudulent statement or entry, shall be subject to the penalties set forth under 18 U.S.C. 1001, and that violations of this paragraph may jeopardize the validity of the application or document, or the validity or enforceability of any patent, trademark registration, or certificate resulting therefrom; and
(2) To the best of the party's knowledge, information and belief, formed after an inquiry reasonable under the circumstances, that —
(i) The paper is not being presented for any improper purpose, such as to harass someone or to cause unnecessary delay or needless increase in the cost of prosecution before the Office;
(ii) The claims and other legal contentions therein are warranted by existing law or by a nonfrivolous argument for the extension, modification, or reversal of existing law or the establishment of new law;
(iii) The allegations and other factual contentions have evidentiary support or, if specifically so identified, are likely to have evidentiary support after a reasonable opportunity for further investigation or discovery; and
(iv) The denials of factual contentions are warranted on the evidence, or if specifically so identified, are reasonably based on a lack of information or belief.
(c) Violations of paragraph (b)(1) of this section by a practitioner or non-practitioner may jeopardize the validity of the application or document, or the validity or enforceability of any patent, trademark registration, or certificate resulting therefrom. Violations of any of paragraphs (b)(2)(i) through (iv) of this section are, after notice and reasonable opportunity to respond, subject to such sanctions as deemed appropriate by the Commissioner, or the Commissioner's designee, which may include, but are not limited to, any combination of —
(1) Holding certain facts to have been established;
(2) Returning papers;
(3) Precluding a party from filing a paper, or presenting or contesting an issue;
(4) Imposing a monetary sanction;
(5) Requiring a terminal disclaimer for the period of the delay; or
(6) Terminating the proceedings in the Patent and Trademark Office.
(d) Any practitioner violating the provisions of this section may also be subject to disciplinary action. See § 10.23(c)(15).
[Added 50 FR 5175, Feb. 6, 1985, effective Mar. 8, 1985; para. (a) revised, 58 FR 54494, Oct. 22, 1993, effective Nov. 22, 1993; paras. (a) & (b) revised, paras. (c) & (d) added, 62 FR 53131, Oct. 10, 1997, effective Dec. 1, 1997; para. (a) revised, 69 FR 56481, Sept. 21, 2004, effective Oct. 21, 2004]

Congress has authorized the Commissioner to "revive an application if the delay is shown to the satisfaction of the Commissioner to have been "unavoidable." 35 U.S.C. §133 (1994).[4]

The regulations at 37 C.F.R. §1.137(a) and (b) set forth the requirements for a petitioner to revive a previously unavoidably or unintentionally, respectively, abandoned application under this congressional grant of authority. The language of 35 U.S.C. §133 and 37 C.F.R. §1.137(a) is clear, unambiguous, and without qualification: the delay in tendering the reply to the outstanding Office action, as well as filing the first petition seeking revival, must have been unavoidable for the reply now to be accepted on petition.[5]

Delays in responding properly raise the question whether delays are unavoidable.[6] Where there is a question whether the delay was unavoidable, Petitioners must meet the burden of establishing that the delay was unavoidable within the meaning of 35 U.S.C. §133 and 37 C.F.R. §1.137(a).[7] And the Petitioner must be diligent in attending to the matter.[8] Failure to do so does not constitute the care required under Pratt, and so cannot satisfy the test for diligence and due care.

(By contrast, unintentional delays are those that do not satisfy the very strict statutory and regulatory requirements of unavoidable delay, and also, by definition, are not intentional.[9]))

Allegations as to the Request to
Withdraw the Holding of Abandonment

The courts have determined the construct for properly supporting a petition seeking withdrawal

---

[4] 35 U.S.C. §133 provides:
35 U.S.C. §133 Time for prosecuting application.
Upon failure of the applicant to prosecute the application within six months after any action therein, of which notice has been given or mailed to the applicant, or within such shorter time, not less than thirty days, as fixed by the Commissioner in such action, the application shall be regarded as abandoned by the parties thereto, unless it be shown to the satisfaction of the Commissioner that such delay was unavoidable.

[5] Therefore, by example, an unavoidable delay in the payment of the Filing Fee might occur if a reply is shipped by the US Postal Service, but due to catastrophic accident, the delivery is not made.

[6] See: *Changes to Patent Practice and Procedure; Final Rule Notice*, 62 *Fed. Reg.* at 53158-59 (October 10, 1997), 1203 *Off. Gaz. Pat. Office* at 86-87 (October 21, 1997).

[7] See: In re Application of G, 11 USPQ2d 1378, 1380 (Comm'r Pats. 1989).

[8] See: Diligence in Filing Petitions to Revive and Petitions to Withdraw the Holding of Abandonment, 1124 Off. Gaz. Pat. Office 33 (March 19, 1991). It was and is Petitioner's burden to exercise diligence in seeking either to have the holding of abandonment withdrawn or the application revived. See 1124 Off. Gaz. Pat. Office supra.

[9] Therefore, by example, an unintentional delay in the reply might occur if the reply and transmittal form are to be prepared for shipment by the US Postal Service, but other pressing matters distract one's attention and the mail is not timely deposited for shipment.

of a holding of abandonment.[10] The commentary at MPEP §711.03(c) provides guidance.[11] Further, the regulation (37 C.F.R. §1.181[12]) requires that relief be sought within two (2) months

---

[10] See: Delgar v. Schulyer, 172 USPQ 513 (D.D.C. 1971).

[11] Further, the commentary at MPEP §711.03(c) also provides:

* * *

B. Petition To Withdraw Holding of Abandonment Based on Evidence That a Reply Was Timely Mailed or Filed

37 C.F.R. §1.10(c) through §1.10(e) and §1.10(g) set forth procedures for petitioning the Director of the USPTO to accord a filing date to correspondence as of the date of deposit of the correspondence as "Express Mail." A petition to withdraw the holding of abandonment relying upon a timely reply placed in "Express Mail" must include an appropriate petition under 37 C.F.R. §1.10(c), (d), * (e), or (g) (see MPEP § 513). When a paper is shown to have been mailed to the Office using the "Express Mail" procedures, the paper must be entered in PALM with the "Express Mail" date.

Similarly, applicants may establish that a reply was filed with a postcard receipt that properly identifies the reply and provides *prima facie* evidence that the reply was timely filed. See MPEP § 503. For example, if the application has been held abandoned for failure to file a reply to a first Office action, and applicant has a postcard receipt showing that an amendment was timely filed in response to the Office action, then the holding of abandonment should be withdrawn upon the filing of a petition to withdraw the holding of abandonment. When the reply is shown to have been timely filed based on a postcard receipt, the reply must be entered into PALM using the date of receipt of the reply as shown on the post card receipt.

Where a certificate of mailing under 37 C.F.R. §1.8, but not a postcard receipt, is relied upon in a petition to withdraw the holding of abandonment, see 37 C.F.R. §1.8(b) and MPEP § 512. As stated in 37 C.F.R §1.8(b)(3) the statement that attests to the previous timely mailing or transmission of the correspondence must be on a personal knowledge basis, or to the satisfaction of the Director of the USPTO. If the statement attesting to the previous timely mailing is not made by the person who signed the Certificate of Mailing (i.e., there is no personal knowledge basis), then the statement attesting to the previous timely mailing should include evidence that supports the conclusion that the correspondence was actually mailed (e.g., copies of a mailing log establishing that correspondence was mailed for that application). When the correspondence is shown to have been timely filed based on a certificate of mailing, the correspondence is entered into PALM with the actual date of receipt (i.e., the date that the duplicate copy of the papers was filed with the statement under 37 C.F.R. §1.8).

37 C.F.R. §1.8(b) also permits applicant to notify the Office of a previous mailing or transmission of correspondence and submit a statement under 37 C.F.R. 1.8(b)(3) accompanied by a duplicate copy of the correspondence when a reasonable amount of time (e.g., more than one month) has elapsed from the time of mailing or transmitting of the correspondence. Applicant does not have to wait until the application becomes abandoned before notifying the Office of the previous mailing or transmission of the correspondence. Applicant should check the private Patent Application Information Retrieval (PAIR) system for the status of the correspondence before notifying the Office. See MPEP § 512.

* * *

[12] The regulations at 37 C.F.R. §1.181 provide:

§ 1.181 Petition to the Director.

<>

(a) Petition may be taken to the Director:

(1) From any action or requirement of any examiner in the *ex parte* prosecution of an application, or in *ex parte* or *inter partes* prosecution of a reexamination proceeding which is not subject to appeal to the Board of Patent Appeals and Interferences or to the court;

(2) In cases in which a statute or the rules specify that the matter is to be determined directly by or reviewed by the Director; and

(3) To invoke the supervisory authority of the Director in appropriate circumstances. For petitions involving action of the Board of Patent Appeals and Interferences, see § 41.3 of this title.

(b) Any such petition must contain a statement of the facts involved and the point or points to be reviewed and the action requested. Briefs or memoranda, if any, in support thereof should accompany or be embodied in the petition; and where facts are to be proven, the proof in the form of affidavits or declarations (and exhibits, if any) must accompany the petition.

(c) When a petition is taken from an action or requirement of an examiner in the *ex parte* prosecution of an application, or in the *ex parte* or *inter partes* prosecution of a reexamination proceeding, it may be required that there have been a proper request for reconsideration (§ 1.111) and a repeated action by the examiner. The examiner may be directed by the Director to furnish a written statement, within a specified time,

of the act complained of.

Petitioner appears now to have satisfied the "showing" requirements described herein.

CONCLUSION

Because it appears that Petitioner has satisfied the burdens set forth in Delgar v. Schulyer, the petition as considered under 37 C.F.R. §1.181 is **granted**; the 3 April, 2006, holding of abandonment[13] is vacated.

The instant application is released to Technology Center 3700 for further processing in due course.

While telephone inquiries regarding this decision may be directed to the undersigned at (571) 272-3214, it is noted that all practice before the Office is in writing (see: 37 C.F.R. §1.2[14]) and the proper authority for action on any matter in this regard are the statutes (35 U.S.C.), regulations (37 C.F.R.) and the commentary on policy (MPEP). Therefore, no telephone discussion may be controlling or considered authority for Petitioner's action(s).

John J. Gillon, Jr.
Senior Attorney
Office of Petitions

---

setting forth the reasons for his or her decision upon the matters averred in the petition, supplying a copy to the petitioner.
(d) Where a fee is required for a petition to the Director the appropriate section of this part will so indicate. If any required fee does not accompany the petition, the petition will be dismissed.
(e) Oral hearing will not be granted except when considered necessary by the Director.
(f) The mere filing of a petition will not stay any period for reply that may be running against the application, nor act as a stay of other proceedings. Any petition under this part not filed within two months of the mailing date of the action or notice from which relief is requested may be dismissed as untimely, except as otherwise provided. This two-month period is not extendable.
(g) The Director may delegate to appropriate Patent and Trademark Office officials the determination of petitions.
[24 FR 10332, Dec. 22, 1959; 34 FR 18857, Nov. 26, 1969; paras. (d) and (g), 47 FR 41278, Sept. 17, 1982, effective Oct. 1, 1982; para. (a), 49 FR 48416, Dec. 12, 1984, effective Feb. 11, 1985; para. (f) revised, 65 FR 54604, Sept. 8, 2000, effective Nov. 7, 2000; paras. (a) and (c) revised, 65 FR 76756, Dec. 7, 2000, effective Feb. 5, 2001; paras. (a), (a)(2)-(3), (c)-(e) & (g) revised, 68 FR 14332, Mar. 25, 2003, effective May 1, 2003; para. (a)(3) revised, 69 FR 49959, Aug. 12, 2004, effective Sept. 13, 2004]

[13] This decision addresses only this event.

[14] The regulations at 37 C.F.R. §1.2 provide:
§1.2 Business to be transacted in writing.
All business with the Patent and Trademark Office should be transacted in writing. The personal attendance of applicants or their attorneys or agents at the Patent and Trademark Office is unnecessary. The action of the Patent and Trademark Office will be based exclusively on the written record in the Office. No attention will be paid to any alleged oral promise, stipulation, or understanding in relation to which there is disagreement or doubt.

UNITED STATES PATENT AND TRADEMARK OFFICE

Commissioner for Patents
United States Patent and Trademark Office
P.O. Box 1450
Alexandria, VA 22313-1450
www.uspto.gov

BROWN, RUDNICK, BERLACK & ISRAELS, LLP.
BOX IP, 18TH FLOOR
ONE FINANCIAL CENTER
BOSTON MA 02111

COPY MAILED

AUG 28 2006

OFFICE OF PETITIONS

In re Application of	:	
Brisbois	:	
Application No. 10/610,374	:	DECISION ON PETITION
Filed: June 30, 2003	:	TO WITHDRAW
Attorney Docket No. BRISBOIS	:	FROM RECORD
	:	

This is a decision on the Request to Withdraw as attorney or agent of record under 37 C.F.R. § 1.36(b), filed May 11, 2006.

The request is **NOT APPROVED**.

A grantable request to withdraw as attorney/agent of record must be signed by every attorney/agent seeking to withdraw or contain a clear indication that one attorney is signing on behalf of another/others. A request to withdraw will not be approved unless at least 30 (thirty) days would remain between the date of approval and the later of the expiration date of a time to file a response or the expiration date of the maximum time period which can be extended under 37 C.F.R. § 1.136(a).

The Office cannot approve the request at this time since the reasons provided do not meet any of the conditions under the mandatory or permissive categories enumerated in 37 CFR 10.40. Section 10.40 of Title 37 of the Code of Federal Regulation states, "[a] practitioner shall not withdraw from employment in a proceeding before the Office without permission from the Office[.]" More specifically, 37 CFR 10.40 states, "[i]f paragraph (b) of this section is not applicable, a practitioner may not request permission to withdraw in matter pending before the Office unless such request or such withdrawal is" for one the permissive reasons listed in 37 CFR 10.40(c). The reasons set forth in the request, "the file has been transferred", does not meet any the conditions set forth in 37 CFR 10.40.

In order to request or take action in a patent matter, the assignee must establish its ownership of the patent to the satisfaction of the Director. In this regard, a Statement under 37 CFR 3.73(b) must have either: (i) documentary evidence of a chain of title from the original owner to the assignee (*e.g.*, copy of an executed assignment), and a statement affirming that the documentary evidence of the chain of title from the original owner to the assignee was or concurrently is being

submitted for recordation pursuant to § 3.11; or (ii) a statement specifying where documentary evidence of a chain of title from the original owner to the assignee is recorded in the assignment records of the Office (*e.g.*, reel and frame number).

All future communications from the Office will continue to be directed to the above-listed address until otherwise notified by applicant.

Telephone inquiries concerning this decision should be directed to April Wise at 571-272-1642.

April M. Wise
Petitions Examiner
Office of Petitions

UNITED STATES PATENT AND TRADEMARK OFFICE

Commissioner for Patents
United States Patent and Trademark Office
P.O. Box 1450
Alexandria, VA 22313-1450
www.uspto.gov

FEB - 7 2005

MAILED

FEB - 7 2005

OFFICE OF THE DIRECTOR
TC 3600

HARNESS, DICKEY & PIERCE, P.L.C.
P.O. Box 828
Bloomingfield Hills, MI 48303

January 25, 2005

In re Application of:	:	**DECISION ON PETITION TO**
Michael WILLARD	:	**REVIEW RESTRICTION**
Application No. 10/610,382	:	**REQUIREMENT UNDER**
Filed: June 30, 2003	:	**37 CFR 1.144**

This is in response to the petition filed November 2, 2004 under 37 CFR 1.144 requesting the Director to review the final requirement for restriction. The petition requests the Director to reconsider and at least partially withdraw the requirement for restriction.

A review of the record indicates that a requirement for restriction was mailed on June 8, 2004. The restriction requirement identified five distinct groups – Group I (claims 1-8) drawn to a convertible roof actuation mechanism classified in Class 296, Subclass 107.12, Group II (claims 9-15) drawn to a convertible roof system classified in Class 296, Subclass 107.09, Group III (claims 16-23) drawn to a convertible roof tensioning system classified in Class 296, Subclass 116, Group IV (claims 24-25) drawn to a mechanically linked retractable roof system classified in Class 296, Subclass 118 and Group V (claims 26-31) drawn to a method classified in Class 296, Subclass 117. The examiner's reason for distinctness indicated that the Groups were related as combination and subcombination and further indicated that the combination of Group I did not require the particulars of a pair of actuators recited in the subcombination of Group II, the five roof bows in the subcombination of Group III and the opposed side rails in the subcombination of Group IV. The Applicant traversed the requirement for restriction, pointing out the supposed errors, and elected Group I (claims 1-8) on July 8, 2004. Applicant's response further added new claims 32-47 which applicant argued read on the elected invention. A subsequent telephone interview was conducted between the Examiner and Applicant's representative, during which the Examiner noted further restriction of the provisionally elected Group I (claims 1-8) and newly added claims 32-47 was required. In response, Applicant again provisionally elected to prosecute Group I with traverse.

A first Office action on the merits was mailed on August 2, 2004. In the Office action, the restriction requirement relative to claims 9-31 was deemed proper by the Examiner and made FINAL. Claims 32-47 were noted by the Examiner as being withdrawn from consideration.

Applicant argues the Examiner has not sufficiently shown why it would be a burden to examine all claims. Applicant points out that each of the independent claims 1, 9, 16, 32 and 39 define a convertible roof apparatus and a plurality of roof bows similarly mechanically linked to provide a tensioned position.

A review of the Office action indicates that the examiner has not sufficiently shown the distinctness between the specifics of the subcombination and the related limitations of the combination claims. The inventions or groups identified all recite a different combination of elements associated with convertible roof systems or mechanisms having a plurality of bows similarly mechanically linked to provide a tensioned position.

The restriction requirement as it applies to Groups I-V and claims 32-47 is hereby vacated.

The petition is GRANTED to the extent that the restriction requirement is vacated.

The application will be returned to the examiner for immediate action consistent with this decision, including the preparation of a non-final action on the merits for claims 1-47.

Telephone inquiries should be directed to D. Glenn Dayoan, Supervisory Patent Examiner, at (703) 308-3102.

Robert Oberleitner, Director
Patent Technology Center 3600
(703) 308-1134

dgd: 1/25/05
SM

UNITED STATES PATENT AND TRADEMARK OFFICE

Commissioner for Patents
United States Patent and Trademark Office
P. O. Box 1450
Alexandria, VA 22313-1450
www.uspto.gov

HOSHENG TU
15 RIEZ
NEWPORT BEACH, CA 92657-0116

COPY MAILED

APR 19 2005

OFFICE OF PETITIONS

In re Application of	:
Sung	:
Application No. 10/610,391	: DECISION GRANTING PETITION
Filed: June 30, 2003	: UNDER 37 CFR 1.137(f)
Attorney Docket No. S&T-107	:

This is a decision on the petition, filed February 18, 2005 (certificate of mailing date February 11, 2005), to revive the instant nonprovisional application under the unintentional provisions of 37 CFR 1.137(f).

The petition is **GRANTED**.

Petitioner states that the instant nonprovisional application is the subject of an application filed in a foreign country or under a mulinational international treaty on November 5, 2004. However, the U.S. Patent and Trademark Office was unintentionally not notified of this filing within 45 days subsequent to the filing of the subject application.

In view of the above, this application became abandoned pursuant to 35 U.S.C. § 122(b)(2)(B)(iii) and 37 CFR 1.213(c) for failure to timely notify the Office of the filing of an application in a foreign country, or under a multilateral international agreement, that requires publication of applications 18 months after filing.

A petition under 37 CFR 1.137(f) must be accompanied by:

(1) the reply which is met by the notification of such filing in a foreign country or under a multinational treaty;

(2) the petition fee as set forth in 37 CFR 1.17(m); and

(3) a statement that the entire delay in filing the required reply from the due date of the reply until the filing of a grantable petition was unintentional.

The instant petition has been found to be in compliance with 37 CFR 1.137(f). Accordingly, the failure to timely notify the Office of a foreign or international filing within 45 days after the date of filing of such foreign or international application as provided by 35 U.S.C. § 122(b)(2)(B)(iii) and 37 CFR 1.213(c) is accepted as having been unintentionally delayed.

The previous Request and Certification under 35 U.S.C. § 122(b)(2)(B)(i) has been rescinded. A Notice Regarding Rescission of Nonpublication Request which sets forth the projected publication date of July 28, 2005 accompanies this decision on petition.

Any inquiries concerning this decision may be directed to the undersigned at (571) 272-3230.

This application is being forwarded to Technology Center Art Unit 1615 for examination in due course.

E Shirene Willis

E. Shirene Willis
Petitions Attorney
Office of Petitions
Office of the Deputy Commissioner
for Patent Examination Policy

ATTACHMENT: Communication Regarding Rescission of Nonpublication Request

UNITED STATES PATENT AND TRADEMARK OFFICE

Commissioner for Patents
United States Patent and Trademark Office
P.O. Box 1450
Alexandria, VA 22313-1450
www.uspto.gov

Paper No.

Julian F. Santos
McDonnell Boehnen Hulbert & Berghoff
32nd Floor
300 S. Wacker Drive
Chicago IL 60606

MAILED

JUL 3 1 2009

OFFICE OF PETITIONS

In re Application of	:	
Lewis et al.	:	
Application No. 10/610,402	:	LETTER REGARDING
Filed: June 27, 2003	:	PATENT TERM ADJUSTMENT
Docket No. 03-593	:	
Title: PORTAL FOR DISTRIBUTING	:	
BUSINESS AND PRODUCT INFORMATION	:	

This is in response to the "APPLICATION FOR PATENT TERM ADJUSTMENT UNDER 37 C.F.R. § 1.705(B)," filed May 26, 2009. Applicants request that the determination of patent term adjustment be increased to one thousand one hundred and forty-six (1146) days from nine hundred thirty-one (931) days as calculated by the Office as of the mailing of the initial determination of patent term adjustment. Applicant requests this correction in part on the basis that the Office will take in excess of three years to issue this patent. In addition, applicants disclose that a period of reduction for applicant delay should be 16 days, not 17 days.

To the extent that the instant application for patent term adjustment requests reconsideration of the patent term adjustment as it relates to the Office's failure to issue the patent within 3 years of the filing date, the application for patent term adjustment under 37 CFR 1.705(b) is **DISMISSED as PREMATURE**.

Knowledge of the actual date the patent issues is required to calculate the amount, if any, of additional patent term patentee is entitled to for Office failure to issue the patent within 3 years. See § 1.702(b). (This is true even where a request for continued examination (RCE) was filed). The computer will not undertake the § 1.702(b) calculation until the actual date of

issuance of the patent has been determined. Likewise, the computer will not calculate any further Office delay under § 1.702(a)(4) or applicant delay under § 1.704(c)(10) until the actual date of issuance of the patent has been determined. As such, the Office can not make a determination on the correctness of the patent term adjustment until the patent has issued.

Requesting reconsideration of the patent term adjustment to be indicated on the patent under 37 CFR 1.705(b) based on the initial determination of patent term adjustment and a projected issuance date of the patent (or even the filing date of the request for continued examination) is premature. Accordingly, it is appropriate to dismiss as premature such a request.

Rather than file an application for patent term adjustment under 37 CFR 1.705(b) contesting the 37 CFR 1.702(b) calculation at the time of the mailing of the notice of allowance, applicant is advised that they may wait until the time of the issuance of the patent and file a request for reconsideration of the patent term adjustment pursuant to 37 CFR 1.705(d). As the USPTO does not calculate the amount of time earned pursuant to 37 CFR 1.702(b) until the time of the issuance of the patent, the Office will consider any request for reconsideration of the patent term adjustment due to an error in the calculation of 37 CFR 1.702(b) to be timely if the request for reconsideration is filed within two months of the issuance of the patent. However, as to all other bases for contesting the initial determination of patent term adjustment received with the notice of allowance, applicant must timely file an application for patent term adjustment prior to the payment of the issue fee[1].

To the extent that Applicants otherwise request reconsideration of the patent term adjustment under 37 CFR 1.705(b), the application for patent term adjustment is **GRANTED**.

---

[1] For example, if applicant disputes both the calculation of patent term adjustment under 37 CFR 1.702(a)(1) for Office failure to mail a first Office action or notice of allowance not later than fourteen months after the date on which the application was filed and under 37 CFR 1.702(b) for Office failure to issue a patent within three years of the actual filing date of the application, then applicant must still timely file an application for patent term adjustment prior to the payment of the issue fee to contest the calculation of Office delay in issuing a first Office action or notice of allowance. See 37 CFR 1.705(b) and 35 U.S.C. 154(b)(3)(B). A dispute as to the calculation of the §1.702(a)(1) period raised on request for reconsideration of patent term adjustment under 37 CFR 1.705(d) will be dismissed as untimely filed.

The Office has updated the PALM screen to reflect that the Patent Term Adjustment (PTA) determination at the time of the mailing of the notice of allowance is nine hundred thirty-two (932) days (1076 days of Office delay less 144 days of Applicant delay). A copy of the updated PALM screen, showing the correct determination, is enclosed.

On April 2, 2009, the Office mailed a Determination of Patent Term Adjustment under 35 U.S.C. 154(b) in the above-identified application. The Notice stated that the patent term adjustment is 931 days. The instant request was timely filed on May 26, 2009. Applicants indicated that they believe that the patent term adjustment indicated in the Determination of Patent Term Adjustment is incorrect and should be recalculated. Applicants indicate that it appears that the PTA Calculations in PAIR incorrectly calculates one period of Applicant delay.

A review of the application history reveals that Applicants are correct.

Specifically, pursuant to 37 C.F.R. § 1.704(b), the failure to reply to an Office action within three months is a failure to engage in reasonable efforts to conclude prosecution. A final Office action was mailed on September 19, 2007, and a reply in compliance with §1.113(c), a Request for Continued Examination (RCE) was filed on January 4, 2008, which is three months and 16 days after the mailing of the final Office action. As such, Applicants failed to engage in reasonable efforts to conclude prosecution of the application, and this delay totalled 16 days.

However the Office incorrectly used a filing date of January 5, 2008 for the RCE when calculating the period of Applicant delay. As such, the Office incorrectly determined that a period of 17 days of Applicant delay is associated with the submission of the RCE. The period of reduction of 17 days is being removed and a period of reduction of 16 days is being entered.

Applicants are reminded that any delays by the Office pursuant to 37 CFR 1.702(a)(4) and 1.702(b) and any applicant delays under 37 CFR 1.704(c)(10) will be calculated at the time of the issuance of the patent and applicants will be notified of the revised patent term adjustment to be indicated on the patent in the Issue Notification letter that is mailed to applicants approximately three weeks prior to issuance.

The Office acknowledges submission of the $200.00 fee set forth in 37 CFR 1.18(e) for consideration of the application for patent term adjustment under 37 CFR 1.705(b).

Any request for reconsideration of the patent term adjustment indicated on the patent must be timely filed within 2 months after issuance pursuant to 37 CFR 1.705(d) and must include payment of the required fee under 37 CFR 1.18(e).

The Office of Data Management has been advised of this decision. This matter is being referred to the Office of Data Management for issuance of the patent.

Telephone inquiries specific to this matter should be directed to Senior Attorney Paul Shanoski (571) 272-3225.

Nancy Johnson

Nancy Johnson
Senior Petitions Attorney
Office of Petitions
United States Patent and Trademark Office

Enclosure: Copy of Revised PALM Screen

Day : Wednesday

PALM INTRANET

Date: 7/29/2009
Time: 09:12:10

PTA Calculations for Application: 10/610402			
Application Filing Date:	06/27/2003	PTO Delay (PTO):	1076
Issue Date of Patent:		Three Years:	0
Pre-Issue Petitions:	0	Applicant Delay (APPL):	145
Post-Issue Petitions:	0	Total PTA (days):	932
PTO Delay Adjustment:	1		

File Contents History

Number	Date	Contents Description	PTO	APPL	START
67	07/29/2009	ADJUSTMENT OF PTA CALCULATION BY PTO		16	
66	07/29/2009	ADJUSTMENT OF PTA CALCULATION BY PTO	17		
58	04/02/2009	MAIL NOTICE OF ALLOWANCE			
57	03/30/2009	ISSUE REVISION COMPLETED			
56	03/30/2009	DOCUMENT VERIFICATION			
55	03/30/2009	NOTICE OF ALLOWANCE DATA VERIFICATION COMPLETED			
54	03/30/2009	CASE DOCKETED TO EXAMINER IN GAU			
53	03/30/2009	EXAMINER'S AMENDMENT COMMUNICATION			
52	03/30/2009	NOTICE OF ALLOWABILITY			
51	02/13/2009	INFORMATION DISCLOSURE STATEMENT CONSIDERED			
50	02/13/2009	ELECTRONIC INFORMATION DISCLOSURE STATEMENT		36	47
49	02/13/2009	INFORMATION DISCLOSURE STATEMENT (IDS) FILED			
48	01/28/2009	DATE FORWARDED TO EXAMINER			
47	01/08/2009	RESPONSE AFTER NON-FINAL ACTION		92	45
46	01/08/2009	REQUEST FOR EXTENSION OF TIME - GRANTED			
45	07/08/2008	MAIL NON-FINAL REJECTION	64		37
44	03/25/2008	INFORMATION DISCLOSURE STATEMENT (IDS) FILED			
43	03/31/2008	NON-FINAL REJECTION			
42	03/25/2008	INFORMATION DISCLOSURE STATEMENT CONSIDERED			
41	03/25/2008	INFORMATION DISCLOSURE STATEMENT (IDS) FILED			

40	01/25/2008	DATE FORWARDED TO EXAMINER			
39	01/05/2008	AMENDMENT SUBMITTED/ENTERED WITH FILING OF CPA/RCE			
38	01/25/2008	DATE FORWARDED TO EXAMINER			
37	01/05/2008	REQUEST FOR CONTINUED EXAMINATION (RCE)		17	31
36	01/25/2008	DISPOSAL FOR A RCE/CPA/129 (EXPRESS ABANDONMENT IF CPA)			
35	01/25/2008	DATE FORWARDED TO EXAMINER			
34	01/05/2008	AMENDMENT SUBMITTED/ENTERED WITH FILING OF CPA/RCE			
33	01/05/2008	REQUEST FOR EXTENSION OF TIME - GRANTED			
32	01/04/2008	WORKFLOW - REQUEST FOR RCE - BEGIN			
31	09/19/2007	MAIL FINAL REJECTION (PTOL - 326)			
30	09/14/2007	FINAL REJECTION			
29	07/03/2007	INFORMATION DISCLOSURE STATEMENT CONSIDERED			
28	07/03/2007	REFERENCE CAPTURE ON IDS			
27	07/03/2007	ELECTRONIC INFORMATION DISCLOSURE STATEMENT		0	25
26	07/12/2007	DATE FORWARDED TO EXAMINER			
25	07/03/2007	RESPONSE AFTER NON-FINAL ACTION			
24	07/03/2007	INFORMATION DISCLOSURE STATEMENT (IDS) FILED			
23	06/05/2007	MAIL NON-FINAL REJECTION	1012		-1
22	05/14/2007	CASE DOCKETED TO EXAMINER IN GAU			
21	05/14/2007	NON-FINAL REJECTION			
20	08/03/2004	INFORMATION DISCLOSURE STATEMENT CONSIDERED			
19	04/06/2007	CASE DOCKETED TO EXAMINER IN GAU			
18	03/21/2006	CASE DOCKETED TO EXAMINER IN GAU			
17	11/09/2004	IFW TSS PROCESSING BY TECH CENTER COMPLETE			
16	11/09/2004	CASE DOCKETED TO EXAMINER IN GAU			
15	11/09/2004	CASE DOCKETED TO EXAMINER IN GAU			
14.7	08/03/2004	INFORMATION DISCLOSURE STATEMENT (IDS) FILED			
14	08/03/2004	INFORMATION DISCLOSURE STATEMENT (IDS) FILED			

13	08/03/2004	REQUEST FOR FOREIGN PRIORITY (PRIORITY PAPERS MAY BE INCLUDED)			
11	09/25/2003	APPLICATION RETURN FROM OIPE			
10	09/26/2003	APPLICATION IS NOW COMPLETE			
9	09/25/2003	APPLICATION RETURN TO OIPE			
8	09/25/2003	APPLICATION RETURN FROM OIPE			
7	09/25/2003	APPLICATION RETURN TO OIPE			
6	09/24/2003	APPLICATION DISPATCHED FROM OIPE			
5	09/25/2003	APPLICATION IS NOW COMPLETE			
4	09/04/2003	CASE CLASSIFIED BY OIPE			
3	09/04/2003	CLEARED BY OIPE CSR			
2	08/12/2003	IFW SCAN & PACR AUTO SECURITY REVIEW			
1	06/27/2003	INITIAL EXAM TEAM NN			

Search Another: Application# Search

EXPLANATION OF PTA CALCULATION

EXPLANATION OF PTE CALCULATION

To go back, right click here and select Back. To go forward, right click here and select Forward. To refresh, right click here and select Refresh.

Back to OASIS | Home page

UNITED STATES PATENT AND TRADEMARK OFFICE

COMMISSIONER FOR PATENTS
UNITED STATES PATENT AND TRADEMARK OFFICE
P.O. BOX 1450
ALEXANDRIA, VA 22313-1450
www.uspto.gov

Paper No.

Julian F. Santos
McDonnell Boehnen Hulbert & Berghoff
32nd Floor
300 S. Wacker Drive
Chicago IL 60606

COPY MAILED
MAR 01 2010

In re Patent No. 7,583,401	:	DECISION ON REQUEST
Lewis	:	FOR
Issue Date: September 1, 2009	:	RECONSIDERATION OF
Application No. 10/610,402	:	PATENT TERM ADJUSTMENT
Filed: June 27, 2003	:	and
Atty Docket No. 03-593	:	NOTICE OF INTENT TO ISSUE
	:	CERTIFICATE OF CORRECTION

This is a decision on the petition filed on October 29, 2009, which is being treated as a petition under 37 CFR 1.705(d) requesting that the patent term adjustment indicated on the above-identified patent be corrected to indicate that the term of the above-identified patent is extended or adjusted by one thousand, one hundred, and forty-six (1,146).

The petition to correct the patent term adjustment indicated on the above-identified patent to indicate that the term of the above-identified patent is extended or adjusted by one thousand one hundred and forty-four (1,144) days is **GRANTED to the extent indicated herein.**

As the period from the filing date of the request for continued examination (RCE) to the issue date of the patent is not included in the "B" delay period, the over three year period begins on June 28, 2006 and ends on January 3, 2008, the day before the RCE was filed, and not January 4, 2008 the day of filing of the RCE as calculated by patentees. See 35 U.S.C. 154(b)(1)(B)(i). Thus, the over 3 year period is 555 not 556 days, and the B delay considering the 343 days of overlap is 212, not 213 days. Moreover, the initial determination of patent term adjustment of 932 days as corrected by the decision mailed July 31, 2009 already accounts for a correction

decreasing applicant delay by 1 day. As such, the correct patent term adjustment is 1144, not 1146 days.

The Office will *sua sponte* issue a certificate of correction. Pursuant to 37 CFR 1.322, the Office will not issue a certificate of correction without first providing assignee or patentee an opportunity to be heard. Accordingly, patentees are given **one (1) month or thirty (30) days**, whichever is longer, from the mail date of this decision to respond. No extensions of time will be granted under § 1.136.

The Office acknowledges submission of the $200.00 fee set forth in 37 CFR 1.18(e). No additional fees are required.

The application is being forwarded to the Certificates of Branch for issuance of a certificate of correction. The Office will issue a certificate of correction indicating that the term of the above-identified patent is extended or adjusted by **one thousand one hundred and forty-four (1,144)** days.

Telephone inquiries specific to this matter should be directed to Senior Attorney Paul Shanoski at (571) 272-3225.

Nancy Johnson
Senior Petitions Attorney
Office of Petitions

Enclosure: Copy of DRAFT Certificate of Correction

UNITED STATES PATENT AND TRADEMARK OFFICE

CERTIFICATE OF CORRECTION

PATENT : 7,583,401 B2

DATED : **September 1, 2009** **DRAFT**

INVENTOR(S) : Lewis

It is certified that error appears in the above-identified patent and that said Letters Patent is hereby
corrected as shown below:

On the cover page,

[*] Notice: Subject to any disclaimer, the term of this patent is extended or adjusted under 35 USC 154(b) by 932 days

Delete the phrase "by 932 days" and insert – by 1,144 days--

UNITED STATES PATENT AND TRADEMARK OFFICE

Commissioner for Patents
United States Patent and Trademark Office
P.O. Box 1450
Alexandria, VA 22313-1450
www.uspto.gov

SCOTT P. ZIMMERMAN, PLLC
PO BOX 3822
CARY, NC 27519

COPY MAILED

JUL 0 2 2008

OFFICE OF PETITIONS

In re Application of :
SILVER, Edward M. :
Application No. 10/610,416 :
Filed: June 30, 2003 :
Attorney Docket No. **BS02497** :

DECISION ON PETITION

This is a decision on the petition under the unintentional provisions of 37 CFR 1.137(b), filed June 4, 2007, to revive the above-identified application.

The petition is **GRANTED.**

The application became abandoned for failure to timely file a reply within the meaning of 37 CFR 1.113 to the final Office action of March 7, 2006. The proposed reply required for consideration of a petition to revive must be a Notice of Appeal (and appeal fee required by 37 CFR 41.20(b)(2), an amendment that *prima facie* places the application in condition for allowance, a Request for Continued Examination and submission (37 CFR 1.114), or the filing of a continuing application under 37 CFR 1.53(b). See MPEP 711.03(c)(II)(A)(2). Accordingly, the date of abandonment of this application is June 8, 2006.

The petition satisfies the requirements of 37 CFR 1.137(b) in that petitioner has supplied (1) the reply in the form of a Request for Continued Examination (RCE) and fee of $790, and the submission required by 37 CFR 1.114; (2) the petition fee of $1500; and (3) an adequate statement of unintentional delay.

Telephone inquiries concerning this decision should be directed to Monica A. Graves at (571) 272-7253.

This application is being referred to Technology Center AU 2617 for processing of the RCE and for appropriate action by the Examiner in the normal course of business on the amendment submitted in accordance with 37 CFR 1.114.

Brian W. Brown
Petitions Examiner
Office of Petitions

UNITED STATES PATENT AND TRADEMARK OFFICE

COMMISSIONER FOR PATENTS
UNITED STATES PATENT AND TRADEMARK OFFICE
P.O. BOX 1450
ALEXANDRIA, VA 22313-1450
WWW.USPTO.GOV

Paper No. None

WOOD, PHILLIPS, KATZ, CLARK & MORTIMER
500 W. MADISON STREET
SUITE 3800
CHICAGO IL 60661

COPY MAILED
SEP 22 2006
OFFICE OF PETITIONS

In re Application of Viktor Brost et al. Application No. 10/610,441 Filed: June 30, 2003 Attorney Docket Number: 00655-1203US Title: HEAT EXCHANGER	DECISION ON PETITION UNDER 37 C.F.R. §1.137(b)

This is a decision on the petition filed January 9, 2006, pursuant to 37 C.F.R. §1.137(b)[1], to revive the above-identified application.

The Office regrets the period of delay in issuing this decision.

The above-identified application became abandoned for failure to reply in a timely manner to the Notice to File Corrected Application Papers - Notice of Allowance Mailed (notice). The notice was mailed September 23, 2005, and indicated that the residence portions of the declaration failed to include countries for each of the joint inventors, and set a non-extendable period for reply of one month. No response was received. Accordingly, the above-identified application became abandoned on October 24, 2005. A notice of abandonment was mailed May 26, 2006.

---

1 A grantable petition pursuant to 37 CFR 1.137(b) must be accompanied by:

1. The reply required to the outstanding Office action or notice, unless previously filed;
2. The petition fee as set forth in § 1.17(m);
3. A statement that the entire delay in filing the required reply from the due date for the reply until the filing of a grantable petition pursuant to this paragraph was unintentional. The Commissioner may require additional information where there is a question whether the delay was unintentional, and;
4. Any terminal disclaimer (and fee as set forth in § 1.20(d)) required pursuant to paragraph (d) of this section.

With the present petition, Petitioner has submitted the petition fee and the proper statement of unintentional delay. It is noted that a terminal disclaimer is not required.

Regarding the first requirement of Rule §1.137(b), Petitioner has not submitted the required reply to the Office action. The required reply is the reply sufficient to have avoided abandonment, had such reply been timely filed[2].

Petitioner has asserted that the residence address for each of the joint inventors is Germany. Petitioner has further asserted that the declaration contains postal codes for each of the inventors, and each of these postal codes begin with the letter "D," which "is believed to be a clear indication of Germany for the residence address under international conventions for postal codes[3]."

This is not a sufficient indicator to meet the requirements of 37 C.F.R. §1.63(c)(1). In order for the application to be revived, petitioner must submit a reply which satisfies 37 C.F.R. §1.137(b)(1). This will require the submission of either a newly executed declaration which explicitly lists the country of Germany in the residence fields for each of the inventors, executed by each of the inventors, or the submission of an Application Data Sheet, pursuant to 37 C.F.R. §1.76, which lists the country of residence of each of the inventors as Germany.

Consequently, the petition must be **DISMISSED**.

Any reply must be submitted within **TWO (2) MONTHS** from the mail date of this decision. Extensions of time under 37 C.F.R. §1.136(a) are permitted.

The reply should include a cover letter entitled "Renewed Petition Under 37 C.F.R. 1.137(b)". This is not a final agency action within the meaning of 5 U.S.C 704.

The renewed petition should indicate in a prominent manner that the attorney handling this matter is Paul Shanoski, and may be submitted by mail[4], hand-delivery[5], or facsimile[6].

---

2 See M.P.E.P. 711.03(c).
3 Petition, page 1.
4 Mail Stop Petition, Commissioner for Patents, United States Patent and Trademark Office, P.O. Box 1450, Alexandria, VA, 22313-1450.
5 Customer Window, Randolph Building, 401 Dulaney Street, Alexandria, VA, 22314.
6 (571) 273-8300- please note this is a central facsimile number.

Telephone inquiries regarding *this decision* should be directed to the undersigned at (571) 272-3225[7]. All other inquiries concerning examination procedures or status of the application should be directed to the Technology Center.

Paul Shanoski
Senior Attorney
Office of Petitions
United States Patent and Trademark Office

---

7 Petitioner will note that all practice before the Office should be in writing, and the action of the Office will be based exclusively on the written record in the Office. See 37 C.F.R. §1.2. As such, Petitioner is reminded that no telephone discussion may be controlling or considered authority for Petitioner's further action(s).

UNITED STATES PATENT AND TRADEMARK OFFICE

COMMISSIONER FOR PATENTS
UNITED STATES PATENT AND TRADEMARK OFFICE
P.O. BOX 1450
ALEXANDRIA, VA 22313-1450
WWW.USPTO.GOV

Paper No. None

WOOD, PHILLIPS, KATZ, CLARK & MORTIMER
500 W. MADISON STREET
SUITE 3800
CHICAGO IL 60661

COPY MAILED
DEC 0 1 2006
OFFICE OF PETITIONS

In re Application of Viktor Brost et al. Application No. 10/610,441 Filed: June 30, 2003 Attorney Docket Number: 00655-1203US Title: HEAT EXCHANGER	DECISION ON RENEWED PETITION UNDER 37 C.F.R. §1.137(b)

This is a decision on the renewed petition filed October 16, 2006, pursuant to 37 C.F.R. §1.137(b)[1], to revive the above-identified application.

The above-identified application became abandoned for failure to reply in a timely manner to the Notice to File Corrected Application Papers - Notice of Allowance Mailed (notice). The notice was mailed September 23, 2005, and indicated that the residence portions of the declaration failed to include countries for each of the joint inventors, and set a non-extendable period for reply of one month. No response was received. Accordingly, the above-identified application became abandoned on October 24, 2005. A notice of abandonment was mailed May 26, 2006.

---

1 A grantable petition pursuant to 37 CFR 1.137(b) must be accompanied by:

1. The reply required to the outstanding Office action or notice, unless previously filed;
2. The petition fee as set forth in § 1.17(m);
3. A statement that the entire delay in filing the required reply from the due date for the reply until the filing of a grantable petition pursuant to this paragraph was unintentional. The Commissioner may require additional information where there is a question whether the delay was unintentional, and;
4. Any terminal disclaimer (and fee as set forth in § 1.20(d)) required pursuant to paragraph (d) of this section.

The original petition was filed January 9, 2006, and was dismissed via the mailing of a decision on September 22, 2006 for failure to include an acceptable declaration.

With this renewed petition, Petitioner has included an Application Data Sheet that overcomes this deficiency.

As such, this renewed petition is **GRANTED**.

The Office of Patent Publication will be notified of this decision so that the present application can be processed into a patent.

Telephone inquiries regarding *this decision* should be directed to the undersigned at (571) 272-3225. All other inquiries concerning examination procedures or status of the application should be directed to the Technology Center.

Paul Shanoski
Senior Attorney
Office of Petitions
United States Patent and Trademark Office

UNITED STATES PATENT AND TRADEMARK OFFICE

Commissioner for Patents
United States Patent and Trademark Office
P.O. Box 1450
Alexandria, VA 22313-1450
www.uspto.gov

COPY MAILED
MAY 23 2006
OFFICE OF PETITIONS

HESLIN ROTHENBERG FARLEY & MESITI, PC
5 COLUMBIA CIRCLE
ALBANY, NY 12203

In re Application of	:	
Saed, et. al.	:	DECISION ON REQUEST
Application No. 10/610,454	:	TO WITHDRAW FROM
Filed: June 30, 2003	:	RECORD
Attorney Docket No. ICE-014	:	

This is a decision on the Request to Withdraw as attorney or agent under 37 CFR § 1.36(b) or 37 CFR § 10.40 filed December 29, 2005.

The request is **NOT APPROVED**.

A review of the file record indicates that the attorneys or agents associated with Customer No. 22832 do not have power of attorney in this patent application nor is there any statement or evidence of record of employment in or otherwise being engaged in the proceedings in this patent application. Accordingly, the request to withdraw under 37 CFR § 1.36(b) is not applicable.

All future communications from the Office will continue to be directed to the above address until otherwise notified by applicant.

Telephone inquiries concerning this decision should be directed to Andrea Smith at (571) 272-3226.

Andrea Smith
Petitions Examiner
Office of Petitions

Conferee:

cc: KIRKPATRICK & LOCKHART NICHOLSON GRAHAM, LLP
STATE STREET FINANCIAL CENTER
ONE LINCOLN STREET
BOSTON, MA 02111-2950

UNITED STATES PATENT AND TRADEMARK OFFICE

COMMISSIONER FOR PATENTS
UNITED STATES PATENT AND TRADEMARK OFFICE
P.O. BOX 1450
ALEXANDRIA, VA 22313-1450
www.uspto.gov

HOWARD & HOWARD ATTORNEYS, P.C.
THE PINEHURST OFFICE CENTER
SUITE #101
39400 WOODWARD AVENUE
BLOOMFIELD HILLS, MI 48304-5151

COPY MAILED

NOV 23 2005

OFFICE OF PETITIONS

In re Application of	:	
Rixon et al.	:	
Application No. 10/610,476	:	DECISION
Filed: June 30, 2003	:	ON PETITION
Title of Invention:	:	
ADJUSTABLE PEDAL ASSEMBLY	:	
(BANANA ROD)	:	

This is a decision on the Petition to Withdraw Holding of Abandonment, filed March 21, 2005. The petition is properly treated under 37 CFR §1.181(a).

The petition is **dismissed**.

Any further petition to revive the above-identified application must be submitted within TWO (2) MONTHS from the mail date of this decision. Extensions of time under 37 CFR 1.136(a) are permitted. The reconsideration request should include a cover letter entitled "Renewed Petition under 37 CFR 1.181." This is **not** final agency action within the meaning of 5 U.S.C. § 704.

The above-identified application became abandoned for failure to timely and properly reply to the Office communication, mailed March 25, 2004. The Office communication set a shortened statutory reply period of one (1) month. Extensions of time were available under 37 CFR 1.136(a). No reply having been filed, this application became abandoned on April 26, 2004. A Notice of Abandonment was mailed on November 2, 2004.

Applicant requests that the holding of abandonment in this application be withdrawn because Applicant included a customer number on the Application Transmittal papers filed with the application on June 30, 2003. Applicant also provides that the

oath/declaration included an outdated incorrect address; however, Applicant asserts that, as provided in the MPEP 409.03,

> As the Office will not recognize more than one correspondence address (37 CFR 1.33(a)), any inconsistencies between the correspondence address resulting from a Customer Number being provided in an application for the correspondence address and any other correspondence address provided in that application would be resolved in favor of the address of the Customer Number.

Applicant concludes that any confusion as to the correspondence address should have been resolved in favor of the customer number.

Analysis

A review of the section of the MPEP cited to by Applicant reveals that the section refers to and clarifies 37 CFR 1.33(a), which, in relevant part, provides that

> the Office will direct all notices, official letters, and other communications relating to the application to the correspondence address. The Office will not engage in double correspondence with an applicant and a registered patent attorney or patent agent, or with more than one registered patent attorney or patent agent except as deemed necessary by the Director. If more than one correspondence address is specified in a single document, the Office will establish one as the correspondence address and will use the address associated with a Customer Number, if given, over a typed correspondence address.

This recitation - that the address associated with the customer number will be used as the correspondence address when more than one correspondence address is specified in a single document - is reiterated in the MPEP 409.03 as follows:

> 37 CFR 1.33(a) provides that in a patent application the applicant must specify a correspondence address to which the Office will send notices, letters and other communications relating to the application. The correspondence address must appear either in an application data sheet (37 CFR 1.76) or in a clearly identifiable manner elsewhere in any papers submitted

> with an application filing. Where more than one correspondence address is specified, the Office will determine which one to establish as the correspondence address. This is intended to cover, for example, the situation where an application is submitted with multiple addresses, such as one correspondence address being given in the application transmittal letter, and a different one in an accompanying 37 CFR 1.63 oath or declaration, or other similar situations. The determination of which of the correspondence addresses to use will be made on a case-by-case basis, considering such factors as the earliest correspondence address submitted, and the first listed correspondence address if conflicting addresses appear in the same declaration. If more than one correspondence address is specified in a single document, the Office will use the address associated with a Customer Number over a typed correspondence address. (Emphasis supplied).

Subsequently, in MPEP 409.03I, the Office provides guidance on customer number practice, and it is there that Applicant's cite to 409.03 of the MPEP may be located.

A reading of MPEP 409.03I consistent with 37 CFR 1.33(a) and the MPEP 409.03 reveal that Applicant's assertion is without merit. As is iterated in 37 CFR 1.33(a) and the MPEP 409.03, only where "more than one correspondence address is specified in a single document, [will] the Office [] use the address associated with a Customer Number over a typed correspondence address." Id.

The power of attorney filed with the application provided a typed, albeit incorrect, correspondence address. "The determination of which of the correspondence addresses to use will be made on a case-by-case basis, considering such factors as the earliest correspondence address submitted, and the first listed correspondence address if conflicting addresses appear in the same declaration." Id. The Office had no notice that the address appearing in the oath/declaration was not the address associated with the customer number. In this case, the Office properly entered the address appearing in the oath/declaration, and it is this address that correspondence concerning the application was directed.

The petition is dismissed.

Further correspondence with respect to this matter should be addressed as follows:

By mail: Commissioner for Patents
PO Box 1450
Alexandria, VA 22313-1450

By FAX: (571) 273-8300
Attn: Office of Petitions

By hand: Customer Service Window
Randolph Building
401 Dulany Street
Alexandria, VA 22314

Telephone inquiries concerning this matter should be directed to the undersigned at (571) 272-3232.

Derek L. Woods
Attorney
Office of Petitions
Office of the Deputy Commissioner
for Patent Examination Policy

UNITED STATES PATENT AND TRADEMARK OFFICE

COMMISSIONER FOR PATENTS
UNITED STATES PATENT AND TRADEMARK OFFICE
P.O. BOX 1450
ALEXANDRIA, VA 22313-1450
www.uspto.gov

HOWARD & HOWARD ATTORNEYS, P.C.
THE PINEHURST OFFICE CENTER
SUITE #101
39400 WOODWARD AVENUE
BLOOMFIELD HILLS, MI 48304-5151

COPY MAILED

FEB 27 2006

OFFICE OF PETITIONS

In re Application of	:	
Rixon et al.	:	
Application No. 10/610,476	:	DECISION
Filed: June 30, 2003	:	ON PETITION
Title of Invention:	:	
ADJUSTABLE PEDAL ASSEMBLY	:	
(BANANA ROD)	:	

This is a decision on the Petition for Revival of an Application for Patent Abandoned Unintentionally under 37 CFR 1.137(b), filed December 16, 2005.

The petition is **granted**.

The above-identified application became abandoned for failure to timely and properly reply to the Office communication, mailed March 25, 2004. The Office communication set a shortened statutory reply period of one (1) month. Extensions of time were available under 37 CFR 1.136(a). No reply having been filed, this application became abandoned on April 26, 2004. A Notice of Abandonment was mailed on November 2, 2004.

With the instant petition, Petitioner has satisfied the requirements of a grantable petition under 37 CFR 1.137(b). A Response to the Restriction/Election requirement was filed with the instant petition. Accordingly, the petition is granted.

This application is being forwarded to Technology Center Art Unit 3682 for processing of the Response to the Restriction/Election requirement.

Telephone inquiries concerning this matter should be directed to the undersigned at (571) 272-3232.

Derek L. Woods
Attorney
Office of Petitions

UNITED STATES PATENT AND TRADEMARK OFFICE

COMMISSIONER FOR PATENTS
UNITED STATES PATENT AND TRADEMARK OFFICE
P.O. BOX 1450
ALEXANDRIA, VA 22313-1450
www.uspto.gov

Kevin J. Moriarty
Patent Department
Deere & Company
One John Deere Place
Moline, IL 61265-8098

COPY MAILED

SEP 16 2005

OFFICE OF PETITIONS

In re Application of	:	
Georg Kormann	:	
Application No. 10/610,477	:	ON PETITION
Filed: June 30, 2003	:	
Attorney Docket No. 09159-US	:	

This is a decision on the petition under 37 CFR 1.137(b), filed July 11, 2005, to revive the above-identified application.

The petition is **GRANTED**.

The application became abandoned for failure to timely file a reply to the non-final Office action mailed November 15, 2004.

The petition satisfies the requirements of 37 CFR 1.137(b) in that petitioner has supplied (1) the reply in the form of an amendment; (2) the petition fee of $1500; and (3) an adequate statement of unintentional delay.

Telephone inquiries concerning this decision should be directed to the undersigned at (571) 272-3223.

The application file is being referred to Technology Center.

Marianne E. Jenkins
Petitions Examiner
Office of Petitions

UNITED STATES PATENT AND TRADEMARK OFFICE

COMMISSIONER FOR PATENTS
UNITED STATES PATENT AND TRADEMARK OFFICE
P.O. BOX 1450
ALEXANDRIA, VA 22313-1450
www.uspto.gov

John S. Artz
ARTZ & ARTZ
28333 Telegraph Road, Suite 250
Southfield, MI 48034

COPY MAILED

AUG 0 5 2005

OFFICE OF PETITIONS

In re Application of:
STRONG, Russell, W.
Application No.: 10/610,485
Filed: June 30, 2003
Atty's Docket No.: IVI 1024 PUS

DECISION ON PETITION UNDER
37 CFR 1.137(b)

This is a decision on the petition under 37 CFR 1.137(b), filed March 28, 2005 to revive the above-entitled application.

The petition is **GRANTED**.

The above-identified application became abandoned for failure to file a proper reply in a timely manner to the "Notice To File Missing Parts Of Nonprovisional Application" mailed September 30, 2003, which set a period of reply of two (2) months. A response was not filed and no extensions of time under the provisions of 37 CFR 1.136(a) were obtained. Accordingly, this application became abandoned at midnight on November 30, 2003.

The present petition satisfies the conditions for revival pursuant to the provisions of 37 CFR 1.137(b) in that (1) the reply in the form of a response to the "Notice To File Missing Parts Of Nonprovisional Application" mailed September 30, 2003; (2) the petition fee; and (3) the required statement of unintentional delay have been received. Accordingly, the reply to the "Notice To File Missing Parts Of Nonprovisional Application" of September 30, 2003 is accepted as having been unintentionally delayed.

The application file is being referred to the Office Of Initial Patent Examination.

Telephone inquiries concerning this decision should be directed to Richard M. Ross at (571) 272-3296 or, in his absence, the undersigned at (571) 272-3217.

Frances Hicks for
Brian Hearn
Petitions Examiner
Office Of Petitions

UNITED STATES PATENT AND TRADEMARK OFFICE

COMMISSIONER FOR PATENTS
UNITED STATES PATENT AND TRADEMARK OFFICE
P.O. BOX 1450
ALEXANDRIA, VA 22313-1450
www.uspto.gov

WHITEFORD, TAYLOR & PRESTON, LLP
ATTN: GREGORY M. STONE
SEVEN SAINT PAUL STREET
BALTIMORE, MD 21202-1626

COPY MAILED

NOV 22 2005

OFFICE OF PETITIONS

In re Application of	:	
Justin P. Nadeau	:	
Application No. 10/610,491	:	ON PETITION
Filed: June 30, 2003	:	
Attorney Docket No. 78658/1	:	

This is a decision on the petition under 37 CFR 1.137(b), filed August 23, 2005, to revive the above-identified application.

The petition is **GRANTED**.

The application became abandoned for failure to timely submit the issue fee and publication fee.

The petition satisfies the requirements of 37 CFR 1.137(b) in that petitioner has supplied (1) the reply in the form of $700 for payment of the issue fee and $300 for payment of the publication fee; (2) the petition fee of $750; and (3) an adequate statement of unintentional delay.

A courtesy copy of this decision is being mailed to petitioner. Nevertheless, all future correspondence regarding this application file will be directed solely to the address of record until otherwise instructed.

The application file is being referred to the Publishing Division to be processed into a patent.

Telephone inquiries concerning this decision should be directed to the undersigned at (571) 272-3226.

Andrea Smith
Petitions Examiner
Office of Petitions

cc: Justin P. Nadeau
507 State Street
Portsmouth, NH 03801

UNITED STATES PATENT AND TRADEMARK OFFICE

Commissioner for Patents
United States Patent and Trademark Office
P.O. Box 1450
Alexandria, VA 22313-1450
www.uspto.gov

KIRKPATRICK & LOCKHART NICHOLSON GRAHAM
STATE STREET FINANCIAL CENTER
ONE LINCOLN STREET
BOSTON, MA 02111-2950

COPY MAILED

MAY 19 2006

OFFICE OF PETITIONS

In re Application of	:	
James Stuart Wight et al	:	
Application No. 10/610,497	:	DECISION ON PETITION
Filed: June 30, 2003	:	TO WITHDRAW
Attorney Docket No. ICE-017 (0519220.0120)	:	FROM RECORD
	:	

This is a decision on the Request to Withdraw as attorney or agent of record under 37 C.F.R. § 1.36(b), filed December 29, 2005.

The request is **NOT APPROVED** as moot.

A review of the file record indicates that the previously appointed power of attorney has been revoked by the assignee. Accordingly, the request to withdraw under 37 C.F.R. § 1.36(b) is moot.

All future communications from the Office will continue to be directed to the below-listed address until otherwise notified by applicants.

This application is being referred to Technology Center AU 2822 to await a reply to the non-final Office action mailed January 10, 2006.

Telephone inquires concerning this decision should be directed to Wan Laymon at 571-272-3220.

David Bucci
Petitions Examiner
Office of Petitions

cc: BERKELEY LAW & TECHNOLOGY GROUP
1700 NW 167TH PLACE
SUITE 240
BEAVERTON, OR 97006

UNITED STATES PATENT AND TRADEMARK OFFICE

Commissioner for Patents
United States Patent and Trademark Office
P.O. Box 1450
Alexandria, VA 22313-1450
www.uspto.gov

ROSSI KIMMS & MCDOWELL LLP
P.O. BOX 826
ASHBURN, VA 20146-0826

COPY MAILED

OCT 05 2007

OFFICE OF PETITIONS

In re Application of :
Hitoshi Kato et al :
Application No. 10/610,507 : ON PETITION
Filed: June 30, 2003 :
Attorney Docket No. SHEET PROCESSING APPARATUS AND IMAGE FORMING APPARATUS

This is a decision on the petition, filed October 4, 2007 under 37 CFR 1.313(c)(2) to withdraw the above-identified application from issue after payment of the issue fee.

The petition is **GRANTED**.

The above-identified application is withdrawn from issue for consideration of a submission under 37 CFR 1.114 (request for continued examination). See 37 CFR 1.313(c)(2).

Petitioner is advised that the issue fee paid on September 10, 2007 in the above-identified application cannot be refunded. If, however, the above-identified application is again allowed, petitioner may request that it be applied towards the issue fee required by the new Notice of Allowance.[1]

Telephone inquiries should be directed to Irvin Dingle at (571) 272-3210.

This matter is being referred to Technology Center AU 3653 for processing of the request for continued examination under 37 CFR 1.114 and for consideration of the concurrently filed Information Disclosure Statement.

Irvin Dingle
Petitions Examiner
Office of Petitions

---

[1] The request to apply the issue fee to the new Notice may be satisfied by completing and returning the new Issue Fee Transmittal Form PTOL-85(b), which includes the following language thereon: Commissioner for Patents is requested to apply the Issue Fee and Publication Fee (if any) or re-apply any previously paid issue fee to the application identified above. Petitioner is advised that, whether a fee is indicated as being due or not, the Issue Fee Transmittal Form **must** be completed and timely submitted to avoid abandonment. Note the language in bold text on the first page of the Notice of Allowance and Fee(s) Due (PTOL-85).

UNITED STATES PATENT AND TRADEMARK OFFICE

UNITED STATES DEPARTMENT OF COMMERCE
United States Patent and Trademark Office
Address: COMMISSIONER FOR PATENTS
P.O. Box 1450
Alexandria, Virginia 22313-1450
www.uspto.gov

DOCKET CLERK
P.O. DRAWER 800889
DALLAS, TX 75380

Mail Date: 04/20/2010

Applicant	: Stephen R. Whynot	: DECISION ON REQUEST FOR
Patent Number	: 7606181	: RECALCULATION of PATENT
Issue Date	: 10/20/2009	: TERM ADJUSTMENT IN VIEW
Appliction No	: 10/610,508	: OF WYETH AND NOTICE OF INTENT TO
Filed	: 06/30/2003	: ISSUE CERTIFICATE OF CORRECTION
		:

The Request for Recalculation is **GRANTED** to the extent indicated.

The patent term adjustment has been determined to be **1420** days. The USPTO will *sua sponte* issue a certificate of correction reflecting the amount of PTA days determined by the recalculation.

Prior to the issuance of the certificate of correction, the USPTO will afford patentee an opportunity to be heard and request reconsideration. Accordingly, patentee has **one month or thirty (30) days**, whichever is longer, to file a request for reconsideration of this patent term adjustment calculation. See 35 U.S.C. 154(b)(3)(B)(ii) and 37 CFR 1.322(a)(4). No extensions of time will be granted under 37 CFR 1.136.

Patentee should use document code PET.OP if electronically filing a request for reconsideration of this patent term adjustment calculation. The patentee must also include the information required by 37 CFR 1.705(b)(2) and the fee required by 37 CFR 1.18(e). If patentee does not file a timely request for reconsideration of this patent term adjustment calculation including the information required by 37 CFR 1.705(b)(2) and the fee required by 37 CFR 1.18(e), the USPTO will issue a certificate of correction reflecting the PTA determination noted above.

Patentee should be aware that in order to preserve the right to review in the United States District Court for the District of Columbia of the USPTO patent term adjustment determination, patentee must ensure that he or she also take the steps required under 35 U.S.C. 154(b)(4)(A) in a timely manner. Nothing in the request for recalculation should be construed as providing an alternative time frame for commencing a civil action under 35 U.S.C. 154(b)(4)(A).

Any questions concerning this decision should be directed to the Office of Patent Legal Administration at 571-272-7702.

UNITED STATES PATENT AND TRADEMARK OFFICE

Commissioner for Patents
United States Patent and Trademark Office
P.O. Box 1450
Alexandria, VA 22313-1450
www.uspto.gov

Paper No. 080504

NAIPO (NORTH AMERICA INTERNATIONAL PATENT OFFICE)
P.O. Box 506
Merrifield, VA 22116

AUG 19 2004

In re Application of:	:	
CHONG-JEN HUANG et al.	:	
Serial No.: 10/610,529	:	DECISION ON REQUEST TO WITHDRAW FROM RECORD
Filed: July 02, 2003	:	
Attorney Docket No.: **EMEP0052USA0**	:	

This is a decision on the request to withdraw as attorney/agent of record under 37 C.F.R. § 1.36, filed May 18, 2004.

A grantable request to withdraw as attorney of record must be signed by every attorney seeking to withdraw or contain a clear indication that one attorney is signing on behalf of others. A request to withdraw will not be approved unless at least thirty (30) days would remain between the date of approval and the later of the expiration date of a time to file a response or the expiration date of the maximum time period, which can be extended under 37 C.F.R. § 1.136(a).

The request meets all the above stated requirements. The request was signed by Mord Michael Lewis on behalf of himself.

The request is **APPROVED**.

Winston Hsu remains as attorney of record at this time.

All future communications from the Office will continue to be directed to the above address until otherwise notified by applicant.

Inquiries related to this decision should be directed to Lissi Marquis at (571) 272-1596.

Lissi Marquis, Special Programs Examiner
Technology Center 2800
Semiconductors, Electrical and Optical
Systems and Components

UNITED STATES PATENT AND TRADEMARK OFFICE

COMMISSIONER FOR PATENTS
UNITED STATES PATENT AND TRADEMARK OFFICE
P.O. BOX 1450
ALEXANDRIA, VA 22313-1450
www.uspto.gov

Paper No. 080504

NAIPO (NORTH AMERICA INTERNATIONAL PATENT OFFICE)
P.O. Box 506
Merrifield, VA 22116

AUG 16 2004

In re Application of:	:	
YU *et al.*	:	
Serial No.: 10/610,539	:	DECISION ON REQUEST TO WITHDRAW
Filed: July 2, 2003	:	FROM RECORD
Attorney Docket No.: **VIAP0087USA0**	:	

This is a decision on the request to withdraw as attorney of record under 37 C.F.R. § 1.36, filed May 18, 2004.

The request is **DISMISSED.**

The attorney/agent requesting withdrawal is not of record in the above-identified application. As such, the request must be dismissed.

Winston Hsu remains as attorney of record at this time.

All future communications from the Office will continue to be directed to the above address until otherwise notified by applicant.

Inquiries related to this decision should be directed to Lissi Marquis at (571) 272-1596.

Lissi Marquis, Special Programs Examiner
Technology Center 2800
Semiconductors, Electrical and Optical
Systems and Components

UNITED STATES PATENT AND TRADEMARK OFFICE

Commissioner for Patents
United States Patent and Trademark Office
P.O. Box 1450
Alexandria, VA 22313-1450
www.uspto.gov

LOWE HAUPTMAN & BERNER, LLP
1700 DIAGONAL ROAD, SUITE 300
ALEXANDRIA, VA 22314

COPY MAILED
MAY 0 5 2006
OFFICE OF PETITIONS

In re Application of	:	
Shaowei Han et al	:	
Application No. 10/610,541	:	DECISION GRANTING PETITION
Filed: July 2, 2003	:	UNDER 37 CFR 1.313(c)(2)
Attorney Docket No. 4590-001	:	

This is a decision on the petition, filed May 4, 2006, under 37 CFR 1.313(c)(2) to withdraw the above-identified application from issue after payment of the issue fee.

The petition is **GRANTED**.

The above-identified application is withdrawn from issue for consideration of a submission under 37 CFR 1.114 (request for continued examination). See 37 CFR 1.313(c)(2).

Petitioner is advised that the issue fee paid on September 27, 2005 in the above-identified application cannot be refunded. If, however, the above-identified application is again allowed, petitioner may request that it be applied towards the issue fee required by the new Notice of Allowance.[1]

Telephone inquiries should be directed to the undersigned at (571) 272-3218.

This matter is being referred to Technology Center AU 3662 for processing of the request for continued examination under 37 CFR 1.114 and for consideration of the Information Disclosure Statement.

Frances Hicks
Petitions Examiner
Office of Petitions

C:\Documents and Settings\FHicks\My Documents\470\may9\610541.wpd

---

[1] *The request to apply the issue fee to the new Notice may be satisfied by completing and returning the new Part B – Fee(s) Transmittal Form (along with any balance due at the time of submission), which includes the following language thereon: "The Director of the USPTO is requested to apply the Issue Fee and Publication Fee (if any) or to re-apply any previously paid issue fee in the application identified above. Petitioner is advised that, whether a fee is indicated as being due or not, the Issue Fee Transmittal Form* ***must*** *be completed and timely submitted to avoid abandonment. Note the language in bold text on the first page of the Notice of Allowance and Fee(s) Due (PTOL-85).*

UNITED STATES PATENT AND TRADEMARK OFFICE

UNITED STATES DEPARTMENT OF COMMERCE
United States Patent and Trademark Office
Address: COMMISSIONER FOR PATENTS
P.O. Box 1450
Alexandria, Virginia 22313-1450
www.uspto.gov

ROYLANCE, ABRAMS, BERDO & GOODMAN, L.L.P.
1300 19TH STREET, N.W.
SUITE 600
WASHINGTON,, DC 20036

Mail Date: 04/21/2010

Applicant	: Seog-Geun Lee	: DECISION ON REQUEST FOR
Patent Number	: 7636588	: RECALCULATION of PATENT
Issue Date	: 12/22/2009	: TERM ADJUSTMENT IN VIEW
Appliction No	: 10/610,555	: OF WYETH AND NOTICE OF INTENT TO
Filed	: 07/02/2003	: ISSUE CERTIFICATE OF CORRECTION
		:

The Request for Recalculation is **GRANTED** to the extent indicated.

The patent term adjustment has been determined to be **694** days. The USPTO will *sua sponte* issue a certificate of correction reflecting the amount of PTA days determined by the recalculation.

Prior to the issuance of the certificate of correction, the USPTO will afford patentee an opportunity to be heard and request reconsideration. Accordingly, patentee has **one month or thirty (30) days**, whichever is longer, to file a request for reconsideration of this patent term adjustment calculation. See 35 U.S.C. 154(b)(3)(B)(ii) and 37 CFR 1.322(a)(4). No extensions of time will be granted under 37 CFR 1.136.

Patentee should use document code PET.OP if electronically filing a request for reconsideration of this patent term adjustment calculation. The patentee must also include the information required by 37 CFR 1.705(b)(2) and the fee required by 37 CFR 1.18(e). If patentee does not file a timely request for reconsideration of this patent term adjustment calculation including the information required by 37 CFR 1.705(b)(2) and the fee required by 37 CFR 1.18(e), the USPTO will issue a certificate of correction reflecting the PTA determination noted above.

Patentee should be aware that in order to preserve the right to review in the United States District Court for the District of Columbia of the USPTO patent term adjustment determination, patentee must ensure that he or she also take the steps required under 35 U.S.C. 154(b)(4)(A) in a timely manner. Nothing in the request for recalculation should be construed as providing an alternative time frame for commencing a civil action under 35 U.S.C. 154(b)(4)(A).

Any questions concerning this decision should be directed to the Office of Patent Legal Administration at 571-272-7702.

UNITED STATES PATENT AND TRADEMARK OFFICE

COMMISSIONER FOR PATENTS
UNITED STATES PATENT AND TRADEMARK OFFICE
P.O. BOX 1450
ALEXANDRIA, VA 22313-1450
www.uspto.gov

OBLON, SPIVAK, MCCLELLAND, MAIER & NEUSTADT, P.C.
1940 DUKE STREET
ALEXANDRIA VA 22314

COPY MAILED

SEP 2 1 2004

OFFICE OF PETITIONS

ON PETITION

In re Application of
Alexander Centner, et al.
Application No. 10/610,570
Filed: July 2, 2003
Attorney Docket No. 238868US0

This is a decision on the petition, filed September 20, 2004, under 37 CFR 1.313(c)(2) to withdraw the above-identified application from issue after payment of the issue fee.

The petition is **GRANTED**.

The above-identified application is withdrawn from issue for consideration of a submission under 37 CFR 1.114 (request for continued examination). See 37 CFR 1.313(c)(2).

Petitioner is advised that the issue fee paid on August 12, 2004 in the above-identified application cannot be refunded. If, however, the above-identified application is again allowed, petitioner may request that it be applied towards the issue fee required by the new Notice of Allowance. [1]

Telephone inquiries relating to this decision should be directed to the undersigned at (703) 305-9220.

The application is being referred to Technology Center AU 1713 for further processing of the request for continued examination under 37 CFR 1.114 filed September 20, 2004.

Sherry D. Brinkley

/Sherry D. Brinkley
Petitions Examiner
Office of Petitions
Office of the Deputy Commissioner
for Patent Examination Policy

[1] The request to apply the issue fee to the new Notice may be satisfied by completing and returning the new Issue Fee Transmittal Form PTOL-85(b), which includes the following language thereon: "Commissioner for Patents is requested to apply the Issue Fee and Publication Fee (if any) or re-apply any previously paid issue fee to the application identified above." Petitioner is advised that, whether a fee is indicated as being due or not, the Issue Fee Transmittal Form **must** be completed and timely submitted to avoid abandonment. Note the language in bold text on the first page of the Notice of Allowance and Fee(s) Due (PTOL-85).

UNITED STA ' PATENT AND TRADEMARK OFFICE

COMMISSIONER FOR PATENTS
UNITED STATES PATENT AND TRADEMARK OFFICE
P.O. BOX 1450
ALEXANDRIA, VA 22313-1450
www.uspto.gov

OBLON, SPIVAK, MCCLELLAND, MAIER & NEUSTADT, P.C.
1940 DUKE STREET
ALEXANDRIA VA 22314

COPY MAILED

SEP 2 1 2004

OFFICE OF PETITIONS

BEST AVAILABLE COPY

In re Application of
Alexander Centner, et al.
Application No. 10/610,570
Filed: July 2, 2003
Attorney Docket No. 238868US0

ON PETITION

This is a decision on the petition, filed September 20, 2004, under 37 CFR 1.313(c)(2) to withdraw the above-identified application from issue after payment of the issue fee.

The petition is **GRANTED**.

The above-identified application is withdrawn from issue for consideration of a submission under 37 CFR 1.114 (request for continued examination). See 37 CFR 1.313(c)(2).

Petitioner is advised that the issue fee paid on August 12, 2004 in the above-identified application cannot be refunded. If, however, the above-identified application is again allowed, petitioner may request that it be applied towards the issue fee required by the new Notice of Allowance. [1]

Telephone inquiries relating to this decision should be directed to the undersigned at (703) 305-9220.

The application is being referred to Technology Center AU 1713 for further processing of the request for continued examination under 37 CFR 1.114 filed September 20, 2004.

Sherry D. Brinkley
Petitions Examiner
Office of Petitions
Office of the Deputy Commissioner
for Patent Examination Policy

RECEIVED: 9-22-04
OBLON, SPIVAK, McCLELLAND
MAIER & NEUSTADT, P.C.
DOCKETING DEPT.
Initials/Date Docketed: 9-22-04
Type of Resp(s): _____
Due Date(s): _____

[1] The request to apply the issue fee to the new Notice may be satisfied by completing and returning the new Issue Fee Transmittal Form PTOL-85(b), which includes the following language thereon: "Commissioner for Patents is requested to apply the Issue Fee and Publication Fee (if any) or re-apply any previously paid issue fee to the application identified above." Petitioner is advised that, whether a fee is indicated as being due or not, the Issue Fee Transmittal Form must be completed and timely submitted to avoid abandonment. Note the language in bold text on the first page of the Notice of Allowance and Fee(s) Due (PTOL-85).

UNITED STATES PATENT AND TRADEMARK OFFICE

Commissioner for Patents
United States Patent and Trademark Office
P.O. Box 1450
Alexandria, VA 22313-1450
www.uspto.gov

FITZPATRICK, CELLA, HARPER & SCINTO
30 Rockefeller Plaza
New York, NY 10112-3801

MAILED

DEC 06 2006

DIRECTOR'S OFFICE
TECHNOLOGY CENTER 2600

In re Application of	:	
Masaaki Inoo	:	DECISION ON REQUEST TO
Application No. 10/610584	:	PARTICIPATE IN PATENT
Filed: July 2, 2003	:	PROSECUTION HIGHWAY
Attorney Docket No. 03500.017415	:	PILOT PROGRAM AND PETITION
	:	TO MAKE SPECIAL UNDER
	:	37 CFR 1.102(d)

This is a decision on the request to participate in the Patent Prosecution Highway (PPH) pilot program and the petition under 37 CFR 1.102(d), filed November 17, 2006, to make the above-identified application special.

The request and petition are **GRANTED**.

A grantable request to participate in the PPH pilot program and petition to make special require:

(1) The U.S. application must validly claim priority under 35 U.S.C. 119(a) to one or more applications filed in the JPO;
(2) Applicant must submit a copy of the allowable/patentable claim(s) from the JPO application(s) along with an English translation thereof and a statement that the English translation is accurate;
(3) All the claims in the U.S. application must sufficiently correspond or be amended to sufficiently correspond to the allowable/patentable claim(s) in the JPO application(s);
(4) Examination of the U.S. application has not begun;
(5) Applicant must submit a copy of all the office actions from each of the JPO application(s) containing the allowable/patentable claim(s) along with an English translation thereof and a statement that the English translation is accurate;
(6) Applicant must submit an IDS listing the documents cited by the JPO examiner in the JPO office action along with copies of documents except U.S. patents or U.S. patent application publications; and
(7) The required petition fee under 37 CFR 1.17(h).

The request to participate in the PPH pilot program and petition comply with the above requirements. Accordingly, the above-identified application has been accorded "special" status.

Telephone inquiries concerning this decision should be directed to John Peng at 571-272-7272.

All other inquiries concerning the examination or status of the application should be directed to Patent Application Information Retrieval (PAIR) system.

The application is being forwarded to the examiner for action on the merits commensurate with this decision.

John Peng
TC 2600
Quality Assurance Specialist

UNITED STATES PATENT AND TRADEMARK OFFICE

Commissioner for Patents
United States Patent and Trademark Office
P.O. Box 1450
Alexandria, VA 22313-1450
www.uspto.gov

MAILED

MAY 28 2004

Director's Office
Group 3700

Mr. Tim Maier
Min, Hsieh & Hack LLP
2121 K Street, NW 20037

In re application of Thomas J. Wood	: : :	**DECISION ON PETITION** **TO MAKE SPECIAL** **UNDER 37 CFR. 1.102(c)**
Serial Number: 10/610594 Filed: July 02, 2003	: :	

For: **NASAL INTERFACE FOR SLEEP APNEA THERAPY**

This is a decision on the petition filed on April 30, 2004, under 37 CFR. 1.102(c) to make special the above identified application because of the age/health of the applicant. Since the requirements of the M.P.E.P Section 708.02 IV have been met, the petition will be GRANTED.

The examiner is directed (1) to make an interference search for possible interfering applications, (2) to promptly examine this application out of turn, and (3) if any interfering application is discovered, to examine such application simultaneously and state in the first official letter of such application that it is being taken out of turn because of a possible interference.

Petitioner is advised that this application will continue to be special, throughout its entire prosecution and pendency, including interference or appeal, if any, only is Petitioner makes a prompt bona-fide effort, in response to each Office action, to place the application in condition for allowance, even if it is necessary to conduct an interview with the Examiner to accomplish this purpose.

Summary: Decision on Petition **GRANTED**.

Richard A. Bertsch
Director
Technology Center 3700
(703) 308-0975

rt: 5/26/04

UNITED STATES PATENT AND TRADEMARK OFFICE

Commissioner for Patents
United States Patent and Trademark Office
P.O. Box 1450
Alexandria, VA 22313-1450
www.uspto.gov

MAILED

SEP 0 8 2004

TECHNOLOGY CENTER 2100

ERIC A. STEPHENSON
CAMPBELL, STEPHENSON, ASCOLESE, LLP
4807 SPICEWOOD SPRINGS RD.
BLDG. 4, SUITE 201
AUSTIN, TX 78759

In re Application of: Kiselev, et al.
Application No. 10/610,604
Filed: July 1, 2003
For: USE OF READ DATA TRACKING AND CACHING TO RECOVER FROM DATA CORRUPTION

DECISION ON PETITION TO MAKE SPECIAL (ACCELERATED EXAMINATION) UNDER M.P.E.P. §708.02 (VIII)

This is a response to the petition filed May 17, 2004, under 37 C.F.R. §1.102(d) and M.P.E.P. §708.02 (VIII): Accelerated Examination, to make the above-identified application special.

The Petition is **DISMISSED**.

M.P.E.P. §708.02, Section VIII which sets out the prerequisites for a grantable petition for Accelerated Examination under 37 C.F.R. §1.102(d) states in relevant part:

A new application (one which has not received any examination by the examiner) may be granted special status provided that applicant (and this term includes applicant's attorney or agent) complies with each of the following items:

(a) Submits a petition to make special accompanied by the fee set forth in 37 CFR 1.17(h);

(b) Presents all claims directed to a single invention, or if the Office determines that all the claims presented are not obviously directed to a single invention, will make an election without traverse as a prerequisite to the grant of special status;

(c) Submits a statement(s) that a pre-examination search was made, listing the field of search by class and subclass, publication, Chemical Abstracts, foreign patents, etc. The pre-examination search must be directed to the invention as claimed in the application for which special status is requested. A search made by a foreign patent office satisfies this requirement;

(d) Submits one copy each of the references deemed most closely related to the subject matter encompassed by the claims if said references are not already of record; and

(e) Submits a detailed discussion of the references, which discussion points out, with the particularity required by 37 CFR 1.111 (b) and (c), how the claimed subject matter is patentable over the references.

The petition filed May 17, 2004 fails to adequately meet requirements (d) and (e) of the criteria set forth above. With respect to requirement (d), The petition fails to provide a listing of all references deemed to be most closely related to the subject matter encompassed by the claims. Specifically, petitioner has failed to provide reference to "Viswanathan et al." (US 6,654,912), identified on page 2 of the petition, on the accompanying PTO form 1449. With respect to requirement (e), a complete detailed discussion of the (aforementioned most closely related) references has not been provided with the necessary specificity required under 37 CFR 1.111 (b) and (c). In addition, Petitioner should ensure that the above discussion is directed to how the language of ***each of*** the independent claims is specifically distinguishable and patentable from the references provided in requirement (d) above.

Petition to Make Special **DISMISSED**.

Petitioner is given one opportunity to perfect the petition. Any request for reconsideration must be filed within TWO MONTHS of the mail date of this decision. Extensions of time under 37 CFR 1.136(a) are permitted by a declaration or statement providing the information as outlined above.

Until the renewed petition is submitted, the application will be returned to the examiner's docket to await treatment on the merits in the normal order of examination.

Brian L. Johnson
Special Program Examiner
Technology Center 2100
Computer Architecture, Software and Information Security
703-308-0885

BLJ: 9/07/04

UNITED STATES PATENT AND TRADEMARK OFFICE

Commissioner for Patents
United States Patent and Trademark Office
P.O. Box 1450
Alexandria, VA 22313-1450
www.uspto.gov

MAIL

MAR 2 4 2005

DIRECTOR OFFICE
TECHNOLOGY CENTER 2100

CAMPBELL STEPHENSON ASCOLESE, LLP
4807 SPICEWOOD SPRINGS RD.
BLDG. 4, SUITE 201
AUSTIN TX 78759

In re Application of : KISELEV, et al.
Application No. 10/610,604
Filed: JULY 1, 2003
For: USE OF READ DATA TRACKING AND CACHING TO RECOVER FROM DATA CORRUPTION

DECISION ON RECONSIDERATION OF PETITION FOR ACCELERATED EXAMINATION UNDER M.P.E.P.§708.02(VIII) & 37 C.F.R. 102(d)

This is a decision on the Request for Reconsideration filed **November 12, 2004** of the petition to make special under 37 C.F.R. 102(d) and M.P.E.P. § 708.02(VIII): Accelerated Examination, originally filed on May 17, 2004.

The Petition is **GRANTED**.

M.P.E.P. § 708.02, Section VIII which sets out the prerequisites for a grantable petition for Accelerated Examination under 37 C.F.R. § 102(d) states in relevant part:

> A new application (one which has not received any examination by the examiner) may be granted special status provided that applicant (and this term includes applicant's attorney or agent) complies with each of the following items:

(a) Submits a petition to make special accompanied by the fee set forth in 37 CFR 1.17(h);

(b) Presents all claims directed to a single invention, or if the Office determines that all the claims presented are not obviously directed to a single invention, will make an election without traverse as a prerequisite to the grant of special status;

(c) Submits a statement(s) that a pre-examination search was made, listing the field of search by class and subclass, publication, Chemical Abstracts, foreign patents, etc. The pre-examination search must be directed to the invention as claimed in the application for which special status is requested. A search made by a foreign patent office satisfies this requirement;

(d) Submits one copy each of the references deemed most closely related to the subject matter encompassed by the claims if said references are not already of record; and

(e) Submits a detailed discussion of the references, which discussion points out, with the particularity required by 37 CFR 1.111 (b) and (c), how the claimed subject matter is patentable over the references.

Petition to Make Special **GRANTED** since all of the requirements for special status under MPEP § 708.02(VIII) have been met.

The application file is being forwarded to the Examiner for accelerated examination in accordance with the procedures set forth in M.P.E.P. §708.02, Section VIII. If the application is subsequently allowed, it will be given priority for printing. See M.P.E.P. §1309.

3/17/05

Brian L. Johnson
Special Program Examiner
Technology Center 2100
Computer Architecture, Software and Information Security
571-272-3595

JC

SPE RESPONSE FOR CERTIFICATE OF CORRECTION

Paper No.: _____

DATE : 6-1-06

TO SPE OF : ART UNIT 2822

SUBJECT : Request for Certificate of Correction for Appl. No.: 10/601607 Patent No.: 7002207

Please respond to this request for a certificate of correction within 7 days.

Please review the requested changes/corrections as shown in the **COCIN** document(s) in the IFW application image. No new matter should be introduced, nor should the scope or meaning of the claims be changed.

Check claims

Please complete the response (see below) and forward the completed response to scanning using document code **COCX**.

E Young

Certificates of Correction Branch

703-308-9390 ext. 117

Thank You For Your Assistance

The request for issuing the above-identified correction(s) is hereby:

Note your decision on the appropriate box.

- ☒ **Approved** — All changes apply.
- ☐ **Approved in Part** — Specify below which changes **do not** apply.
- ☐ **Denied** — State the reasons for denial below.

Comments: _____

Zandra V. Smith
Supervisory Patent Examiner

SPE

2822
Art Unit

UNITED STATES PATENT AND TRADEMARK OFFICE

Commissioner for Patents
United States Patent and Trademark Office
P.O. Box 1450
Alexandria, VA 22313-1450
www.uspto.gov
DIW Oct-05

CARDINAL HEALTH
7000 CARDINAL PLACE
LEGAL DEPARTMENT - INTELLECTUAL PROPERTY
DUBLIN OH 43017

COPY MAILED

OCT 14 2005

OFFICE OF PETITIONS

In re Application of	:	
Brewer et al.	:	
Application No. 10/610,613	:	DECISION ON PETITION
Filed: 1 July, 2003	:	
Atty Docket No. RPS6042C1	:	

This is a decision on the petition filed on 9 August, 2005, under 37 CFR 1.137(b),[1] to revive the above-identified application.

The petition is **GRANTED**.

The application became abandoned on 20 December, 2004, for failure to timely reply to the Office action requiring Restriction/Election mailed on 19 November, 2004, which set a one (1) month shortened period for reply. No extensions of time

---

[1] Effective December 1, 1997, the provisions of 37 CFR 1.137(b) now provide that where the delay in reply was unintentional, a petition may be filed to revive an abandoned application or a lapsed patent pursuant to 37 CFR 1.137(b). A grantable petition filed under the provisions of 37 CFR 1.137(b) must be accompanied by:

(1) the required reply, unless previously filed. In a nonprovisional application abandoned for failure to prosecute, the required reply may be met by the filing of a continuing application. In a nonprovisional utility or plant application filed on or after June 8, 1995, and abandoned for failure to prosecute, the required reply may also be met by the filing of a request for continuing examination in compliance with § 1.114. In an application or patent, abandoned or lapsed for failure to pay the issue fee or any portion thereof, the required reply must be the payment of the issue fee or any outstanding balance thereof.

(2) the petition fee as set forth in 37 CFR 1.17(m);

(3) a statement that the entire delay in filing the required reply from the due date for the reply until the filing of a grantable petition pursuant to 37 CFR 1.137(b) was unintentional. The Commissioner may required additional information where there is a question whether the delay was unintentional; and

(4) any terminal disclaimer (and fee as set forth in 37 CFR 1.20(d)) required pursuant to 37 CFR 1.137(c)).

under 37 CFR 1.136(a) were obtained. Notice of Abandonment was mailed on 13 June, 2005.

Petitioner has filed an amendment setting forth an election as the required reply.

This application is being referred to Technology Center Art Unit 1639 for further processing.

Telephone inquiries concerning this matter may be directed to the undersigned at (571)272-3231.

Douglas I. Wood
Senior Petitions Attorney
Office of Petitions

UNITED STATES PATENT AND TRADEMARK OFFICE

Commissioner for Patents
United States Patent and Trademark Office
P.O. Box 1450
Alexandria, VA 22313-1450
www.uspto.gov

CARDINAL HEALTH
7000 CARDINAL PLACE
LEGAL DEPARTMENT - INTELLECTUAL PROPERTY
DUBLIN, OH 43017

COPY MAILED
SEP 0 4 2007
OFFICE OF PETITIONS

In re Application of Brewer et al. :
Application No. 10/610,613 : Decision on Petition
Filing Date: July 1, 2003 :
Attorney Docket No. RPS6042C1 :

This is a decision on the "Petition Under 37 CFR §§ 1.136(a) and 1.183" filed June 21, 2007.

Petitioner requests the Office accept a Revocation Of Power of Attorney and accept a new Power of Attorney despite the papers failing to include the signature of inventor Francesca Brewer.

On August 14, 2007, petitioner filed a paper requesting withdrawal of the petition filed June 21, 2007. Therefore, the petition is **dismissed**.

The petition fee of $400 has been credited back to deposit account number 19-4709.

If the person signing the instant petition desires to receive future correspondence regarding this application, the appropriate power of attorney or authorization of agent must be submitted. While a courtesy copy of this decision is being mailed to the person signing the instant petition, all future correspondence will be directed solely to the address currently of record until such time as appropriate instructions are received to the contrary.

Technology Center Art Unit 1614 will be informed of the instant decision and the application will be further examined in due course.

Telephone inquiries regarding this communication should be directed to Petitions Attorney Steven Brantley at (571) 272-3203.

Charles Steven Brantley
Senior Petitions Attorney
Office of Petitions

cc: Steven B. Pokotilow
Strook & Strook & Lavan LLP
180 Maiden Lane
New York, NY 10038

RECEIVED
CENTRAL FAX CENTER
MAY 2 6 2005

Docket No.: 2336-189 **PATENT**

IN THE UNITED STATES PATENT AND TRADEMARK OFFICE

In re Application of	:
PARK, Kyu Yeon	: *Confirmation No. 2590*
U.S. Patent Application No. 10/610,624	: Group Art Unit: 2856
	: Allowed: November 5, 2004
Filed: July 2, 2003	: Examiner: John E. Chapman, Jr.

For: HORIZONTAL AND TUNING FORK VIBRATORY MICROGYROSCOPE

PETITION FOR WITHDRAWAL OF ABANDONMENT

Commissioner for Patents
P.O. Box 1450
Alexandria VA 22313-1450

Sir:

In response to the Notice of Abandonment mailed *May 20, 2005*, attached hereto are copies of the papers prepared and faxed *one week prior* to the due date of the Issue and Publication Fee payments in efforts to timely submit the fee payments:

- Fee Transmittal;
- Credit Card Payment From; *and*
- Facsimile Report.

You will note by the confirmation copy of the facsimile receipt that the fee payments were timely submitted to the U.S. Patent and Trademark Office via facsimile on *January 31, 2005*. Accordingly, it is respectfully requested that the Notice of Abandonment be withdrawn in view of the above, and the fee payments be entered accordingly.

Respectfully submitted,

LOWE HAUPTMAN & BERNER, LLP

Benjamin J. Hauptman
Registration No. 29,310

USPTO Customer No. 22429
1700 Diagonal Road, Suite 310
Alexandria, VA 22314
(703) 684-1111 BJH/klb
(703) 518-5499 Facsimile
Date: May 26, 2005

CERTIFICATION OF FACSIMILE TRANSMISSION
I HEREBY CERTIFY THAT THIS PAPER IS BEING FACSIMILE TRANSMITTED TO THE PATENT AND TRADEMARK OFFICE ON THE DATE SHOWN BELOW

Kindra Bryant
TYPE OR PRINT NAME OF PERSON SIGNING CERTIFICATION

SIGNATURE May 26, 2005 **DATE**

703-872-9306
FACSIMILE NUMBER

UNITED STATES PATENT AND TRADEMARK OFFICE

COMMISSIONER FOR PATENTS
UNITED STATES PATENT AND TRADEMARK OFFICE
P.O. BOX 1450
ALEXANDRIA, VA 22313-1450
www.uspto.gov

Paper No. 080504

NAIPO (NORTH AMERICA INTERNATIONAL PATENT OFFICE)
P.O. Box 506
Merrifield, VA 22116

AUG 19 2004

In re Application of:	:	
HSUAN *et al.*	:	
Serial No.: 10/610,638	:	DECISION ON REQUEST TO WITHDRAW
Filed: July 2, 2003	:	FROM RECORD
Attorney Docket No.: **NAUP0524USA**	:	

This is a decision on the request to withdraw as attorney/agent of record under 37 C.F.R. § 1.36, filed May 18, 2004.

A grantable request to withdraw as attorney of record must be signed by every attorney seeking to withdraw or contain a clear indication that one attorney is signing on behalf of others. A request to withdraw will not be approved unless at least thirty (30) days would remain between the date of approval and the later of the expiration date of a time to file a response or the expiration date of the maximum time period, which can be extended under 37 C.F.R. § 1.136(a).

The request meets all the above stated requirements. The request was signed by Mord Michael Lewis on behalf of himself.

The request is **APPROVED**.

Winston Hsu remains as attorney of record at this time.

All future communications from the Office will continue to be directed to the above address until otherwise notified by applicant.

Inquiries related to this decision should be directed to Lissi Marquis at (571) 272-1596.

Lissi Marquis, Special Programs Examiner
Technology Center 2800
Semiconductors, Electrical and Optical
Systems and Components

UNITED STATES PATENT AND TRADEMARK OFFICE

COMMISSIONER FOR PATENTS
UNITED STATES PATENT AND TRADEMARK OFFICE
P.O. BOX 1450
ALEXANDRIA, VA 22313-1450
www.uspto.gov

Paper No. 080504

NAIPO (NORTH AMERICA INTERNATIONAL PATENT OFFICE)
P.O. Box 506
Merrifield, VA 22116

AUG 16 2004

In re Application of:	:	
LIN *et al.*	:	
Serial No.: 10/610,639	:	DECISION ON REQUEST TO WITHDRAW
Filed: July 2, 2003	:	FROM RECORD
Attorney Docket No.: **VIAP0078USA**	:	

This is a decision on the request to withdraw as attorney/agent of record under 37 C.F.R. § 1.36, filed May 18, 2004.

A grantable request to withdraw as attorney of record must be signed by every attorney seeking to withdraw or contain a clear indication that one attorney is signing on behalf of others. A request to withdraw will not be approved unless at least thirty (30) days would remain between the date of approval and the later of the expiration date of a time to file a response or the expiration date of the maximum time period, which can be extended under 37 C.F.R. § 1.136(a).

The request meets all the above stated requirements. The request was signed by Mord Michael Lewis on behalf of himself.

The request is **APPROVED**.

Winston Hsu remains as attorney of record at this time.

All future communications from the Office will continue to be directed to the above address until otherwise notified by applicant.

Inquiries related to this decision should be directed to Lissi Marquis at (571) 272-1596.

Lissi Marquis, Special Programs Examiner
Technology Center 2800
Semiconductors, Electrical and Optical
Systems and Components

UNITED STATES PATENT AND TRADEMARK OFFICE

COMMISSIONER FOR PATENTS
UNITED STATES PATENT AND TRADEMARK OFFICE
P.O. BOX 1450
ALEXANDRIA, VA 22313-1450
www.uspto.go

NAIPO (NORTH AMERICA INTERNATINAL
PATENT OFFICE)
P.O. Box 506
Merrifield, VA 22116

MAILED

DEC 02 2004

DIRECTOR OFFICE
TECHNOLOGY CENTER 2600

In re Application of
Ming-Wei Yu
Application No. 10/610640
Filed: July 2, 2003
For:

MULTI-FUNCTION PRODUCT CAPABLE OF DETECTING A SLOPE OF A SECOND FUNCTIONAL MACHINE INSTALLED ABOVE A FIRST FUNCTIONAL MACHINE

DECISION ON REQUEST TO WITHDRAW FROM RECORD

This is a decision on the request for withdrawal as agent of record filed on May 18, 2004.

A grantable request to withdraw as attorney/agent of record must:
(1) indicate the present mailing address of the attorney(s)/agent(s) who seek(s) to withdraw, and
(2) be signed by each attorney/agent seeking to withdraw or clearly be signed on their behalf, and
(3) be *approved* at least thirty (30) days prior to the maximum extendable period for response to any outstanding Office Action, and
(4) indicate the address to which future correspondence should be mailed.

Petitioner has met all of the above. Accordingly, the request is **GRANTED**.

Mord Michael Lewis have been withdrawn for the record.

All future communications from the Office will continue to be directed to the address listed above until otherwise notified by applicant. Applicant is reminded of the obligation to promptly notify the Patent and Trademark Office of any change in correspondence address to ensure receipt of all communications from the Office.

Kenneth Wieder
Special Program Examiner
Technology Center 2600
Communications
(571) 272-2986

SPE RESPONSE FOR CERTIFICATE OF CORRECTION

Paper No.: _____

DATE : 02/18/06

TO SPE OF : ART UNIT **1755**

SUBJECT : Request for Certificate of Correction on Patent No.: 10/610641 6984598

A response is requested with respect to the accompanying request for a certificate of correction.

Please complete this form and return with file, within **7** days to:
Palm location **7580, Certificates of Correction Branch – South Tower – 9A22**
If response is for an IFW, **return to employee (named below) via PUBSCofC Team in MADRAS.**
With respect to the change(s) requested, correcting Office and/or Applicant's errors, should the patent read as shown in the certificate of correction (COCIN)? No new matter should be introduced, nor should the scope or meaning of the claims be changed.

Thank You For Your Assistance

Angela Green
Certificates of Correction Branch
Tel. No. 703-305-9380 ext. 123

The request for issuing the above-identified correction(s) is hereby:
Note your decision on the appropriate box.

- [x] **Approved** — **All** changes apply.
- [ ] **Approved in Part** — Specify below which changes **do not** apply.
- [ ] **Denied** — State the reasons for denial below.

Comments:

J.A. LORENGO
SUPERVISORY PATENT EXAMINER
SPE

1755
Art Unit

PTOL-306 (REV. 7/03)
U.S. DEPARTMENT OF COMMERCE Patent and Trademark Office

UNITED STATES PATENT AND TRADEMARK OFFICE

UNITED STATES DEPARTMENT OF COMMERCE
United States Patent and Trademark Office
Address: COMMISSIONER FOR PATENTS
P.O. Box 1450
Alexandria, Virginia 22313-1450
www.uspto.gov

BUCHANAN, INGERSOLL & ROONEY PC
POST OFFICE BOX 1404
ALEXANDRIA, VA 22313-1404

Mail Date: 04/26/2010

Applicant	: Helena Corneliusson	: DECISION ON REQUEST FOR
Patent Number	: 7578811	: RECALCULATION of PATENT
Issue Date	: 08/25/2009	: TERM ADJUSTMENT IN VIEW
Application No	: 10/610,653	: OF WYETH
Filed	: 07/02/2003	:
		:

The Patentee's Request for Recalculation is **DISMISSED.**

This Request is deemed ineligible for consideration for one or more of the following reasons:

(A). The patent for which PTA recalculation is requested is either a design or reissue application or is a reexamination proceeding;

(B). The patent for which PTA recalculation is requested resulted from a utility or plant application filed under 35 USC 111(a) before May 29, 2000 and no CPA filed in the application on/after May 29, 2000;

(C). The patent for which PTA recalculation is requested resulted from an international application in which the international filing date was before May 29, 2000 and no CPA filed in the application on/after May 29, 2000;

(D). The patent for which PTA recalculation is requested issued on/after March 2, 2010;

(E). The Request for Recalculation was filed more than 180 days after the grant date of the patent and the request was not filed within two months of a dismissal of a request for reconsideration of the of the patent term under 37 CFR 1.705(d);

(F). The Request for Recalculation is not solely limited to USPTO pre-Wyeth interpretation of 35 U.S.C. 154(b)(2)(A);

or

(G). A civil action was filed pursuant to 35 U.S.C. 154(b)(4)(A)concerning the same patent at issue in this request.

Patentee may file a reply to this decision dismissing the Request for Recalculation. Patentee must file such reply within one month or thirty days, whichever is longer, of the mail date of the decision dismissing the Request for Recalculation. No fee is required if patentee is asserting in the reply that the dismissal for ineligibility is improper.

Patentee should use document code PET.OP if electronically filing a reply to this dismissal. If the USPTO finds that the request was improperly deemed ineligible, the USPTO will mail applicant a recalculation determination.

Patentee should be aware that in order to preserve the right to review in the United States District Court for the District of Columbia of the USPTO patent term adjustment determination, patentee must ensure that he or she also take the steps required under 35 U.S.C. 154(b)(4)(A). Nothing in the request for recalculation should be construed as providing an alternative time frame for commencing a civil action under 35 U.S.C. 154 (b)(4)(A).

Any questions concerning this decision should be directed to the Office of Patent Legal Administration at 571-272-7702.

SPE RESPONSE FOR CERTIFICATE OF CORRECTION

Paper No.:20090726

DATE : July 27, 2009

TO SPE OF : ART UNIT 2628

SUBJECT : Request for Certificate of Correction on Patent No.: 10/610,662

A response is requested with respect to the accompanying request for a certificate of correction.

Please complete this form and return with file, within **7** days to:
Certificates of Correction Branch - ST (South Tower) 9A22
Palm location **7590** - Tel. No. (703) 305-8309

With respect to the change(s) requested, correcting Office and/or Applicant's errors, should the patent read as shown in the certificate of correction? No new matter should be introduced, nor should the scope or meaning of the claims be changed.

Thank You For Your Assistance **Certificates of Correction Branch**

The request for issuing the above-identified correction(s) is hereby:

Note your decision on the appropriated box.

☐ **Approved** All changes apply.

☒ **Approved in Part** Specify below which changes **do not** apply.

☐ **Denied** State the reasons for denial below.

Comments:

All changes are approved with the exception of the following change: col. 16, line 52, in claim 21, afer "where" insert --said--. Said change is not approved because it raises an antecedent basis issue. The respective claim language fails to disclose a prior "means for creating a second edge area."

Additionally, there appears to be an antecedent basis issue with the language "said means for creating a first edge area" (claim 21, col. 16, line 44). The respective claim language fails to disclose a prior "means for creating a first edge area."

/Kee M Tung/
Supervisory Patent Examiner, Art Unit 2628

UNITED STATES PATENT AND TRADEMARK OFFICE

Commissioner for Patents
United States Patent and Trademark Office
P.O. Box 1450
Alexandria, VA 22313-1450
www.uspto.gov

Paper No.

LANIER FORD SHAVER & PAYNE
P O BOX 2087
HUNTSVILLE, AL 35804

COPY MAILED

MAY 2 5 2004

OFFICE OF PETITIONS

In re Application of :
Grady Lawrence and :
W. Timothy Carlton : DECISION REFUSING STATUS
Application No. 10/610,669 : UNDER 37 C.F.R. §1.47(a)
Filed: July 1, 2003 :
Title: ANTIMICROBIAL SOLUTION FOR :
BOTH TROPICAL AND ORAL USE :
Attorney Docket No. 03-0049.01 :

This is in response to the "37 C.F.R. 1.47 PETITION FOR RECOGNITION OF UNCOOPERATIVE INVENTOR" filed February 2, 2004 (certificate of mailing January 30, 2004).

The petition is **DISMISSED**.

Rule 47 applicant is given **TWO MONTHS** from the mailing date of this decision to reply, correcting the below-noted deficiencies. Any reply should be entitled "Request for Reconsideration of Petition Under 37 C.F.R. §1.47(a)," and should only address the deficiencies noted below, except that the reply may include an oath or declaration executed by the non-signing inventor. **Failure to respond will result in abandonment of the application.** Any extensions of time will be governed by 37 C.F.R. §1.136(a).

The above-identified application was filed on July 1, 2003, without an executed oath or declaration. Accordingly, on September 30, 2003, applicants were mailed a "Notice to File Missing Parts of Nonprovisional Application - Filing Date Granted (Notice)," requiring an executed oath or declaration and a surcharge for its late filing. This Notice set a two-month period for reply with extensions of time obtainable under § 1.136(a).

In response, applicants filed the instant petition; the late surcharge under § 1.16(e); along with a declaration executed by inventor Carlton on behalf of himself and on behalf of non-signing inventor Lawrence. This response was made timely by an accompanying petition (and fee) for extension of time for response within the second month. Applicants assert that status under §1.47(a) is proper because inventor Grady F. Lawrence has refused to participate in the prosecution of the present application despite his obligation to do so. In support thereof, applicants submit an affidavit of joint inventor Carlton.

A grantable petition under 37 C.F.R. § 1.47(a) requires: (1) proof that the non-signing inventor cannot be reached or found, after diligent effort, or refuses to sign the oath or declaration after having been presented with the application papers (specification, claims and drawings); (2) an acceptable oath or declaration in compliance with 35 U.S.C. §§ 115 and 116; (3) the petition fee; and (4) a statement of the last known address of the non-signing inventor. The instant petition does not satisfy requirement (1).

Petitioner has not shown that inventor Lawrence has refused to join in the application. Before a refusal can be alleged, applicants must demonstrate that a *bona fide* attempt was made to present a copy of the application papers (specification, including claims, drawings, and oath or declaration) to the non-signing inventor. See MPEP 409.03(d). The evidence only supports a conclusion that only attempts to present the declaration to inventor Lawrence were made. A refusal by an inventor to sign an oath or declaration when the inventor has not been presented with the application papers does not itself suggest that the inventor is refusing to join the application unless it is clear that the inventor understands exactly what he or she is being asked to sign and refuses to accept the application papers. It is reasonable to require that the inventor be presented with the application papers before a petition under 37 CFR 1.47 is granted since such a procedure ensures that the inventor is apprised of the application to which the oath or declaration is directed. *In re Gray*, 115 USPQ 80 (Comm'r Pat. 1956).

Thus, on renewed petition, applicants must establish that the entire application package, including specification, claims and drawings, was presented to non-signing inventor Lawrence and he subsequently refused to sign. If they have not already been sent, a copy of the application papers should be sent to the last known address of the non-signing inventor, or, if the inventor is represented by counsel, to the address of the non-signing inventor's attorney.

Further correspondence with respect to this matter should be addressed as follows:

By mail: Mail Stop Petition
Commissioner for Patents
P.O. Box 1450
Alexandria, VA 22313-1450

By FAX: (703) 872-9306
ATTN: NANCY JOHNSON
SENIOR PETITIONS ATTORNEY

By hand: CUSTOMER SERVICE WINDOW[1]
2011 South Clark Place
Crystal Plaza Two Lobby
Arlington, VA 22202

Telephone inquiries specific to this matter should be directed to the undersigned at (703) 305-0309.

Nancy Johnson
Senior Petitions Attorney
Office of Petitions

---

[1] Effective June 5, 2004, patent correspondence delivered by hand or delivery services, other than the USPS, to the Customer Window must be addressed as follows:

U.S. Patent and Trademark Office
220 20th Street S.
Customer Window, Mail Stop _____
Crystal Plaza Two, Lobby, Room 1B03
Arlington, VA 22202

UNITED STATES PATENT AND TRADEMARK OFFICE

Commissioner for Patents
United States Patent and Trademark Office
P.O. Box 1450
Alexandria, VA 22313-1450
www.uspto.gov

Paper No.

LANIER FORD SHAVER & PAYNE
P O BOX 2087
HUNTSVILLE, AL 35804

COPY MAILED

AUG 1 1 2004

OFFICE OF PETITIONS

In re Application of :
Grady Lawrence and :
W. Timothy Carlton :
Application No. 10/610,669 :
Filed: July 1, 2003 :
Title: ANTIMICROBIAL SOLUTION FOR :
BOTH TROPICAL AND ORAL USE :
Attorney Docket No. 03-0049.01 :

DECISION ACCORDING STATUS
UNDER 37 C.F.R. §1.47(a)

This is in response to the "REQUEST FOR RECONSIDERATION OF 37 CFR 1.47 PETITION FOR RECOGNITION OF UNCOOPERATIVE INVENTOR" filed July 26, 2004.

The petition is **GRANTED**.

The above-identified application was filed on July 1, 2003, without an executed oath or declaration. In response to a "Notice to File Missing Parts of Nonprovisional Application - Filing Date Granted (Notice)" mailed September 30, 2003, applicant filed the initial petition under § 1.47. However, by decision mailed May 25, 2004, the petition was dismissed for failure to show refusal of inventor Lawrence to join in the application. The showing was defective, in that, it did not establish that rule 47 applicant attempted to present all of the application papers to the non-signing inventor.

On instant renewed petition, rule 47 applicant submitted a new affidavit of patent attorney Charles R. Ducker, Jr., attesting to having mailed all of the application papers to inventor Lawrence. However, inventor Lawrence refused to accept the papers. Petitioner has now shown refusal of inventor Lawrence to join in the application, and has now met all outstanding requirements for status under § 1.47.

The declaration filed February 2, 2004 has been reviewed and found in compliance with 37 CFR 1.47(a).

This application is hereby accorded Rule 1.47(a) status.

As provided in new Rule 1.47(c), this Office will forward notice of this application's filing to the non-signing inventor at the address given in the petition. Notice of the filing of this application will also be published in the Official Gazette.

Telephone inquiries regarding this decision should be directed to the undersigned at (703) 305-0309.

Nancy Johnson
Senior Petitions Attorney
Office of Petitions

UNITED STATES PATENT AND TRADEMARK OFFICE

Commissioner for Patents
United States Patent and Trademark Office
P.O. Box 1450
Alexandria, VA 22313-1450
www.uspto.gov

GRADY LAWRENCE
P.O. BOX 1643
SALISBURY, NC 28145-1643

COPY MAILED
AUG 1 1 2004
OFFICE OF PETITIONS

In re Application of :
Grady Lawrence and :
W. Timothy Carlton : LETTER
Application No. 10/610,669 :
Filed: July 1, 2003 :
Title: ANTIMICROBIAL SOLUTION FOR :
BOTH TROPICAL AND ORAL USE :
Attorney Docket No. 03-0049.01 :

Dear Mr. Lawrence:

You are named as a joint inventor in the above-identified United States patent application filed under the provisions of 35 U.S.C. 116 (United States Code) and 37 CFR 1.47(a), Rules of Practice in Patent Cases. Should a patent be granted on the application you will be designated therein as a joint inventor.

As a named inventor you are entitled to inspect any paper in the file wrapper of the application, order copies of all or any part thereof (at a prepaid cost per 37 CFR 1.19) or make your position of record in the application. Alternatively, you may arrange to do any of the preceding through a registered patent attorney or agent presenting written authorization from you. If you care to join the application, counsel of record (see below) would presumably assist you. Joining in the application would entail the filing of an appropriate oath or declaration by you pursuant to 37 CFR 1.63. However, no action on your part is required for this patent to issue with you as a named inventor.

Telephone inquiries regarding this communication should be directed to Petitions Attorney Nancy Johnson at (703) 305-0309. Requests for information regarding your application should be directed to the File Information Unit at (703) 308-2733. Information regarding how to pay for and order a copy of the application, or a specific paper in the application, should be directed to the Certification Division at (703) 308-9726 or 1-800-972-6382 (outside the Washington D.C. area).

Nancy Johnson
Senior Petitions Attorney
Office of Petitions

LANIER FORD SHAVER & PAYNE
P O BOX 2087
HUNTSVILLE, AL 35804

UNITED STATES PATENT AND TRADEMARK OFFICE

Commissioner for Patents
United States Patent and Trademark Office
P.O. Box 1450
Alexandria, VA 22313-1450
www.uspto.gov

OIPE
JAN 2 1 2005
PATENT & TRADEMARK OFFICE

GRADY LAWRENCE
P.O. BOX 1643
SALISBURY, NC 28145-1643

COPY MAILED
AUG 1 1 2004
OFFICE OF PETITIONS

In re Application of :
Grady Lawrence and :
W. Timothy Carlton : LETTER
Application No. 10/610,669 :
Filed: July 1, 2003 :
Title: ANTIMICROBIAL SOLUTION FOR :
BOTH TROPICAL AND ORAL USE :
Attorney Docket No. 03-0049.01 :

Dear Mr. Lawrence:

You are named as a joint inventor in the above-identified United States patent application filed under the provisions of 35 U.S.C. 116 (United States Code) and 37 CFR 1.47(a), Rules of Practice in Patent Cases. Should a patent be granted on the application you will be designated therein as a joint inventor.

As a named inventor you are entitled to inspect any paper in the file wrapper of the application, order copies of all or any part thereof (at a prepaid cost per 37 CFR 1.19) or make your position of record in the application. Alternatively, you may arrange to do any of the preceding through a registered patent attorney or agent presenting written authorization from you. If you care to join the application, counsel of record (see below) would presumably assist you. Joining in the application would entail the filing of an appropriate oath or declaration by you pursuant to 37 CFR 1.63. However, no action on your part is required for this patent to issue with you as a named inventor.

Telephone inquiries regarding this communication should be directed to Petitions Attorney Nancy Johnson at (703) 305-0309. Requests for information regarding your application should be directed to the File Information Unit at (703) 308-2733. Information regarding how to pay for and order a copy of the application, or a specific paper in the application, should be directed to the Certification Division at (703) 308-9726 or 1-800-972-6382 (outside the Washington D.C. area).

Nancy Johnson
Senior Petitions Attorney
Office of Petitions

LANIER FORD SHAVER & PAYNE
P O BOX 2087
HUNTSVILLE, AL 35804

UNITED STATES PATENT AND TRADEMARK OFFICE

JUN - 7 2006

Commissioner for Patents
United States Patent and Trademark Office
P.O. Box 1450
Alexandria, VA 22313-1450
www.uspto.gov

CHARLES R. DUCKER, JR.
LANIER, FORD, SHAVER & PAYNE, PC
P. O. BOX 2087
HUNTSVILLE, AL 35804-2087

In re Application of	:	
Grady Lawrence et al	:	
Serial No.: 10/610,669	:	DECISION ON PETITION
Filed: July 1, 2003	:	
Attorney Docket No.: 03-0049.01	:	

This letter is in response to the Petition under 37 C.F.R. 1.59(b), filed October 14, 2005, to expunge miscellaneous material from the file.

BACKGROUND

A review of the file history shows that this application was filed by W. Timothy Carlton on behalf of himself and Grady Lawrence accompanied by a petition under 37 CFR 1.47 indicating that Grady Lawrence refused to sign the declaration for the application. The initial petition was dismissed as lacking some required elements. These elements were supplied in a renewed petition granted on August 11, 2004. Mr. Lawrence was notified by Office letter of his status as a non-signing inventor at the same time.

On January 21, 2005, Mr. Lawrence filed a letter indicating that authorization was given to Clifton L. Hunt, Jr., to represent his interests in the application. On April 26, 2005, Mr. Lawrence through hi s representative filed a "Protest Against 37 CFR 1.47 Petition for Recognition of Uncooperative Inventor" setting forth a history of negotiations with co-inventor Carlton and business entity/assignee with which he was connected and establishing that Mr. Lawrence was inventor and/or co-inventor of the subject matter of the application.

On October 14, 2005, Applicants' representative, Charles R. Ducker, Jr., paid the Issue Fee and filed this petition to expunge the protest filed by Mr. Lawrence through his representative.

DISCUSSION

The guidelines for expungement of material state as follows:

Petitioner must state that documents submitted (such as in an Information Disclosure Statement) either: (A) is information which contains trade secret material, proprietary material and/or material that is subject to a protective order which has not been made public; or (B) that the

information submitted was unintentionally submitted and the failure to obtain its return would cause irreparable harm to the party who submitted the information or to the party in interest on whose behalf the information was submitted, and the information has not otherwise been made public.

It is noted that the information submitted by the inventor who did not sign the application does not directly relate to patentability of the claims as evidenced by the mailing of a Notice of Allowability and a Notice of Allowance and Issue Fee Due and the payment of the Issue Fee by applicants. Nor do the documents contain information identified as trade secret or proprietary material. However, the documents submitted do represent the non-signing inventor's interest in the invention/application. For this reason the material will not be expunged.

DECISION

The petition is **DENIED** for the reasons set forth above.

The application will be forwarded to the examiner for consideration of minor errors discovered in preparation for printing by Publications Division.

Should there be any questions regarding this decision, please contact Special Program Examiner William R. Dixon, Jr., by mail addressed to Director, Technology Center 1600, PO BOX 1450, ALEXANDRIA, VA 22313-1450, or by telephone at (571) 272-0519 or by Official Fax at 571-273-8300

Bruce M. Kisliuk
Director, Technology Center 1600

UNITED STATES PATENT AND TRADEMARK OFFICE

Commissioner for Patents
United States Patent and Trademark Office
P.O. Box 1450
Alexandria, VA 22313-1450
www.uspto.gov
DIW Aug-07

E I DU PONT DE NEMOURS AND COMPANY
LEGAL PATENT RECORDS CENTER
BARLEY MILL PLAZA 25/1128
4417 LANCASTER PIKE
WILMINGTON DE 19805

COPY MAILED

AUG 03 2007

OFFICE OF PETITIONS

In re Application of	:	
Minshon J. Chiou	:	
Application Number: 10/610674	:	ON PETITION
Filing Date: 07/01/2003	:	
Attorney Docket No. KB4665 US	:	
NA	:	

This is a decision on the petition under 1.137(b),[1] filed on 28 February, 2007, to revive the above-identified application.

The petition is **GRANTED**.

---

[1] Effective December 1, 1997, the provisions of 37 CFR 1.137(b) now provide that where the delay in reply was unintentional, a petition may be filed to revive an abandoned application or a lapsed patent pursuant to 37 CFR 1.137(b). A grantable petition filed under the provisions of 37 CFR 1.137(b) must be accompanied by:

(1) the required reply, unless previously filed. In a nonprovisional application abandoned for failure to prosecute, the required reply may be met by the filing of a continuing application. In a nonprovisional application filed on or after June 8, 1995, and abandoned for failure to prosecute, the required reply may also be met by the filing of a request for continued examination in compliance with § 1.114. In an application or patent, abandoned or lapsed for failure to pay the issue fee or any portion thereof, the required reply must be the payment of the issue fee or any outstanding balance thereof. In an application abandoned for failure to pay the publication fee, the required reply must include payment of the publication fee.

(2) the petition fee as set forth in 37 CFR 1.17(m);

(3) a statement that the entire delay in filing the required reply from the due date for the reply until the filing of a grantable petition pursuant to 37 CFR 1.137(b) was unintentional. The Commissioner may required additional information where there is a question whether the delay was unintentional; and

(4) any terminal disclaimer (and fee as set forth in 37 CFR 1.20(d)) required pursuant to 37 CFR 1.137(c)).

This application became abandoned on 24 November, 2006, for failure to timely respond to the non-final Office action mailed on 23 August, 2006, which set a three (3) month shortened statutory period for reply. No extensions of time under 37 CFR 1.136(a) were obtained. Notice of Abandonment was mailed on 9 March, 2007.

Petitioners have filed an amendment as the required reply.

An extension of time under 37 CFR 1.136 must be filed prior to the expiration of the maximum extendable period for reply.[1] The three-month extension request filed on 28 February, 2007 (certificate of mailing date 26 February, 2007), was submitted more than six (6) months after the end of the period for reply to the Office communication mailed on 23 August, 2006, and therefore is unnecessary. The extension of time fee will be credited to counsel's deposit account, as authorized in the request.

The application is being referred to Technology Center Art Unit 1771 for further processing.

Telephone inquiries concerning this matter may be directed to the undersigned at (571)272-3231.

D Wood

Douglas I. Wood
Senior Petitions Attorney
Office of Petitions

[1] See In re Application of S., 8 USPQ2d 1630, 1631 (Comm'r Pats. 1988).

5/17/05

APPROVED

IFW

DOCKET NO.: TELE-0024

PATENT

OIPE JC139
APR 19 2005
PATENT & TRADEMARK OFFICE

IN THE UNITED STATES PATENT AND TRADEMARK OFFICE

In Re Application of:
LIST, et al.

Confirmation No.: 2932

Application No.: 10/610,691

Filed: June 30, 2003

For: SYSTEMS AND METHODS FOR CONTROL OF MULTIPLE ENGINE MARINE VESSELS

Commissioner for Patents
P.O. Box 1450
Alexandria, VA 22313-1450

WITHDRAWAL AS ATTORNEY AND CHANGE OF CORRESPONDENCE ADDRESS

The attorneys associated with the customer number listed below apply to withdraw in the above identified application.

The reasons for this request are: Received instructions from our client to transfer this application.

☐ The correspondence address is NOT affected by this withdrawal.

☒ Change the correspondence address and direct all future correspondence to Customer No. **30734**

This request is made on behalf of myself and

☐ all the attorneys/agents of record.

☐ the attorneys/agents (with registration numbers) listed on the attached paper(s).

☒ the attorneys/agents associated with the following Customer Number:

23377

This request is enclosed in triplicate (including any attachments).

Date: April 15, 2005

Joseph R. Condo
Registration No. 42,431

Woodcock Washburn LLP
One Liberty Place - 46th Floor
Philadelphia PA 19103
Telephone: (215) 568-3100
Facsimile: (215) 568-3439

© 2005 WW

SPE RESPONSE FOR CERTIFICATE OF CORRECTION 10/610,722

Paper No.: _____

DATE : 2/23/05

TO SPE OF : ART UNIT 2881

SUBJECT : Request for Certificate of Correction on Patent No.: 6803572

A response is requested with respect to the accompanying request for a certificate of correction.

Please complete this form and return with file, within 7 days to:
Certificates of Correction Branch - PK 3-915
Palm location **7580** - Tel. No. 305-8309

With respect to the change(s) requested, correcting Office and/or Applicant's errors, should the patent read as shown in the certificate of correction? No new matter should be introduced, nor should the scope or meaning of the claims be changed.

Lamonte Newsome

Thank You For Your Assistance **Certificates of Correction Branch**

The request for issuing the above-identified correction(s) is hereby:
Note your decision on the appropriate box.

- [x] **Approved** — All changes apply.
- [ ] **Approved in Part** — Specify below which changes **do not** apply.
- [ ] **Denied** — State the reasons for denial below.

Comments:

SPE 2881
Art Unit

UNITED STATES PATENT AND TRADEMARK OFFICE

Commissioner for Patents
United States Patent and Trademark Office
P.O. Box 1450
Alexandria, VA 22313-1450
www.uspto.gov

BENNETT J. BERSON
QUARLES & BRADY LLP
PO BOX 2113
MADISON, WI 53701-2113

COPY MAILED

OCT 29 2007

OFFICE OF PETITIONS

In re Application of	:	
Ajit K. Chowdhury	:	
Application No. 10/610,749	:	ON PETITION
Filed: July 1, 2003	:	
Attorney Docket No. 780202.90130	:	

This is a decision on the petition under the unintentional provisions of 37 CFR 1.137(b), filed July 13, 2007, to revive the above-identified application.

The petition is **GRANTED**.

The application became abandoned for failure to timely file a reply within the meaning of 37 CFR 1.113 to the final Office action of October 24, 2006. The proposed reply required for consideration of a petition to revive must be a Notice of Appeal (and appeal fee required by 37 CFR 41.20(b)(2), an amendment that *prima facie* places the application in condition for allowance, a Request for Continued Examination and submission (37 CFR 1.114), or the filing of a continuing application under 37 CFR 1.53(b). See MPEP 711.03(c)(III)(A)(2). Three-month extension of time pursuant to the provisions of 37 CFR 1.136(a) was obtained. Accordingly, the date of abandonment of this application is April 25, 2007.

The petition satisfies the requirements of 37 CFR 1.137(b) in that petitioner has supplied (1) the reply in the form of a Request for Continued Examination (RCE) and fee of $790 and the submission required by 37 CFR 1.114; (2) the petition fee of $1500; and (3) a proper statement of unintentional delay.

Telephone inquiries concerning this decision should be directed to the undersigned at (571) 272-3210.

This application is being referred to Technology Center AU 3673 for processing of the RCE and for appropriate action by the Examiner in the normal course of business on the amendment submitted in accordance with 37 CFR 1.114.

Irvin Dingle
Petition Examiner
Office of Petitions

UNITED STATES PATENT AND TRADEMARK OFFICE

Commissioner for Patents
United States Patent and Trademark Office
P.O. Box 1450
Alexandria, VA 22313-1450
www.uspto.gov

HOLLAND & KNIGHT LLP
2099 PENNSYLVANIA AVE, N.W.
WASHINGTON DC 20006

COPY MAILED
MAY 18 2006
OFFICE OF PETITIONS

In re Application of	:	
Atkinson et al.	:	DECISION ON PETITION
Application No. 10/610,750	:	TO WITHDRAW
Filed: June 20, 2003	:	FROM RECORD
Attorney Docket No. 086464.00001	:	

This is a decision on the Request to Withdraw as attorney or agent of record under 37 C.F.R. § 1.36(b), filed December 15, 2005.

The request is **APPROVED**.

A grantable request to withdraw as attorney/agent of record must be signed by every attorney/agent seeking to withdraw or contain a clear indication that one attorney is signing on behalf of another/others. A request to withdraw will not be approved unless at least 30 (thirty) days would remain between the date of approval and the later of the expiration date of a time to file a response or the expiration date of the maximum time period which can be extended under 37 C.F.R. § 1.136(a).

The request was signed by Kevin A. Buford.

Kevin A. Buford has been withdrawn as attorney of record; all other attorneys remain of record.

The correspondence address of record remains unchanged.

There is an outstanding Office action mailed March 3, 2006 that requires a reply.

Telephone inquires concerning this decision should be directed to Petitions Examiner Liana Chase at (571) 272-3206. All other inquires concerning either the examination or status of the application should be directed to the Technology Center.

David Bucci
Petitions Examiner
Office of Petitions

UNITED STATES PATENT AND TRADEMARK OFFICE

Commissioner for Patents
United States Patent and Trademark Office
P.O. Box 1450
Alexandria, VA 22313-1450
www.uspto.gov
DIW Oct-06

RISTO A. RINNE, JR.
COMPLETE PATENTING SERVICES
2173 EAST FRANCISCO BOULEVARD, SUITE E
SAN RAFAEL CA 94901

COPY MAILED
OCT 0 6 2006
OFFICE OF PETITIONS

In re Application of	:	
Gates et al.	:	
Application No. 10/610,782	:	ON PETITION
Filed: 15 September, 2004	:	
Attorney Docket No. GATEGLASS	:	
	:	

This is a decision in reference to the petition under 37 CFR 1.181 filed on 14 July, 2006, to withdraw the holding of abandonment.

The petition is **DISMISSED**.

This application became abandoned on 19 November, 2005, for failure to submit to timely submit corrected drawings as required by the Notice of Allowability mailed on 18 August, 2005, which set a three (3) month statutory period for reply. Notice of Abandonment was mailed on 6 April, 2006.

Petitioner essentially asserts that no response to the Notice of Allowability was required because corrected drawings had been filed on 16 April, 2004, prior to the mailing of the Notice of Allowability. Petitioner further avers that "Clearly, the formal drawings that were received by the USPTO were not subsequently given to the Examiner for review."

Petitioners' argument has been carefully considered, but is not persuasive. At the outset, it is noted that the corrected drawings filed on 16 April, 2004, are located in the file, and there is no evidence that the examiner did not review said drawings. Rather, as the Notice of Allowability was mailed after the drawings were filed on 16 April, 2004, the showing of record

suggests that the examiner reviewed those drawings, but that those drawings were not acceptable. It is further noted that the examiner's amendment accompanying the Notice of Allowability states that "[a]uthorization for this examiner's amendment was given in a telephone interview with Mr. Risto Rinne, Jr., on August 16, 2005." The showing of record is therefore that petitioners' counsel discussed the substance of the examiner's amendment, including, presumably, the requirement for drawings, with the examiner on 16 August, 2005, and that petitioners were given actual notice that the drawings of record were not acceptable for issuance of a patent.

Further, the Notice mailed on 18 August, 2006, states that corrected drawings are required and that "Applicant has THREE MONTHS FROM THE 'MAILING DATE' of this communication to file a reply complying with the requirements noted below. **Failure to timely comply will result in ABANDONMENT of this application.**" (emphasis added) Petitioners concededly failed to respond to the Notice of Allowability. Petitioners' argument is, in essence, that nothing was required to be filed in response to the Notice of Allowability because the corrected drawings required therein had already been filed. This argument lacks merit, however, because the Notice of Allowability clearly stated that a reply thereto was required to be filed, regardless of whether applicants believed that all of the examiner's requirements had already been fulfilled.

Further, there is no showing in the written record that the examiner agreed that no reply to the Notice of Allowability was required. As MPEP 711.03(c) states, a delay caused by an applicant's lack of knowledge or improper application of the patent statute, rules of practice or the MPEP is not rendered "unavoidable" due to: (A) the applicant's reliance upon oral advice from USPTO employees; or (B) the USPTO's failure to advise the applicant of any deficiency in sufficient time to permit the applicant to take corrective action. See In re Sivertz, 227 USPQ 255, 256 (Comm'r Pat. 1985).

Lastly, with regards to counsel's statement that "any delay in responding is unavoidable and is due to a death in the immediately family within the first month of receipt of the office action" a petition under 37 CFR 1.137(a) accompanied by the required fee, must be filed if petitioners wish to revive the application on the basis of unavoidable delay.

As such, the showing of record is that the abandonment resulted from the failure of petitioners to respond to the Notice of Allowability, rather than an error on the part of the USPTO.

As such the application is properly held abandoned.

The petition is **DISMISSED.**

Petitioner may wish to consider filing a petition to revive under 37 C.F.R. 1.137(b).

Any request for reconsideration must be filed within **TWO (2) MONTHS** of the date of this decision.

Further correspondence with respect to this matter should be addressed as follows:

By mail: Mail Stop Petition
Commissioner for Patents
P.O. Box 1450
Alexandria, VA 22313-1450

By FAX: (571) 273-8300
Attn: Office of Petitions

By hand: Customer Service Window
Mail Stop Petition
Randolph Building
401 Dulany Street
Alexandria, VA 22314

Telephone inquiries related to this decision should be directed to the undersigned at 571-272-3231.

D Wood

Douglas I. Wood
Senior Petitions Attorney
Office of Petitions

UNITED STATES PATENT AND TRADEMARK OFFICE

Commissioner for Patents
United States Patent and Trademark Office
P.O. Box 1450
Alexandria, VA 22313-1450
www.uspto.gov
DIW Jan-07

RISTO A. RINNE, JR.
COMPLETE PATENTING SERVICES
2173 EAST FRANCISCO BOULEVARD, SUITE E
SAN RAFAEL CA 94901

COPY MAILED

JAN 29 2007

OFFICE OF PETITIONS

In re Application of	:	
Gates et al.	:	
Application No. 10/610,782	:	DECISION ON PETITION
Filed: 1 July, 2003	:	
Attorney Docket No. GATEGLASS	:	

This is a decision on the petition filed on 7 November, 2006, under 37 CFR 1.137(b),[1] to revive the above-identified application.

The petition is **GRANTED**.

The application became abandoned on 19 November, 2005, for failure to timely submit corrected drawings, as required by the Notice of Allowability mailed on 18 August, 2005, which set a three (3) month statutory period for reply. Notice of

---

[1] Effective December 1, 1997, the provisions of 37 CFR 1.137(b) now provide that where the delay in reply was unintentional, a petition may be filed to revive an abandoned application or a lapsed patent pursuant to 37 CFR 1.137(b). A grantable petition filed under the provisions of 37 CFR 1.137(b) must be accompanied by:

(1) the required reply, unless previously filed. In a nonprovisional application abandoned for failure to prosecute, the required reply may be met by the filing of a continuing application. In a nonprovisional utility or plant application filed on or after June 8, 1995, and abandoned for failure to prosecute, the required reply may also be met by the filing of a request for continuing examination in compliance with § 1.114. In an application or patent, abandoned or lapsed for failure to pay the issue fee or any portion thereof, the required reply must be the payment of the issue fee or any outstanding balance thereof. In an application, abandoned for failure to pay the publication fee, the required reply must include payment of the publication fee.

(2) the petition fee as set forth in 37 CFR 1.17(m);

(3) a statement that the entire delay in filing the required reply from the due date for the reply until the filing of a grantable petition pursuant to 37 CFR 1.137(b) was unintentional. The Commissioner may required additional information where there is a question whether the delay was unintentional; and

(4) any terminal disclaimer (and fee as set forth in 37 CFR 1.20(d)) required pursuant to 37 CFR 1.137(c)).

Abandonment was mailed on 6 April, 2006. The petition to withdraw the holding of abandonment filed on 14 July, 2006, was dismissed on 6 October, 2006.

Receipt of the corrected drawings is acknowledged.

This application is being referred to the Publishing Division for processing into a patent.

Telephone inquiries concerning this matter may be directed to the undersigned at (571)272-3231.

D Wood

Douglas I. Wood
Senior Petitions Attorney
Office of Petitions

UNITED STATES PATENT AND TRADEMARK OFFICE

Commissioner for Patents
United States Patent and Trademark Office
P.O. Box 1450
Alexandria, VA 22313-1450
www.uspto.gov

NORTH AMERICA INTELLECTUAL PROPERTY CORPORATION
P.O. BOX 506
MERRIFIELD, VA 22116

COPY MAILED

JAN 20 2006

OFFICE OF PETITIONS

In re Application of	:	
Chih-Hsiang Wu	:	DECISION ON PETITION
Application No. 10/610,791	:	TO WITHDRAW
Filed: July 2, 2003	:	FROM RECORD
Attorney Docket No. HTCP0012USA	:	

This is a decision on the Request to Withdraw as attorney or agent of record under 37 C.F.R. § 1.36(b), filed May 18, 2004.

The request is **APPROVED**.

A grantable request to withdraw as attorney/agent of record must be signed by every attorney/agent seeking to withdraw or contain a clear indication that one attorney is signing on behalf of another/others. A request to withdraw will not be approved unless at least 30 (thirty) days would remain between the date of approval and the later of the expiration date of a time to file a response or the expiration date of the maximum time period which can be extended under 37 C.F.R. § 1.136(a).

The request was signed by Mord Michael Lewis, an attorney of record.

Mord Michael Lewis has been withdrawn as attorney or agent of record; Winston Hsu remains of record.

This matter is being referred to Technology Center AU 2667 for examination in due course.

Telephone inquires concerning this decision should be directed to Wan Laymon at 571-272-3220.

Amelia Au
Petitions Examiner
Office of Petitions

UNITED STATES PATENT AND TRADEMARK OFFICE

COMMISSIONER FOR PATENTS
UNITED STATES PATENT AND TRADEMARK OFFICE
P.O. BOX 1450
ALEXANDRIA, VA 22313-1450
www.uspto.gov

MATRIX SEMICONDUCTOR, INC.
3230 SCOTT BOULEVARD
SANTA CLARA CA 95034

COPY MAILED
MAY 12 2004
OFFICE OF PETITIONS

Applicant: Reed
Appl. No.: 10/610,804
Filing Date: June 30, 2003
Title: SILICON NITRIDE ANTIFUSE FOR USE IN DIODE-ANTIFUSE MEMORY ARRAYS
Attorney Docket No.: MA-002-1-I-1
Pub. No.: US 2004/0016991 A1
Pub. Date: January 29, 2004

This is in response to the request for correction of patent application publication under 37 CFR 1.221(b), which was received on March 10, 2004.

The request is DISMISSED.

The instant request is that the patent application publication be republished because the application list the inventors in the wrong order as the inventors are listed as M. Johnson, N. Knall and S. Herner, not S. Herner, M. Johnson and N. Knall which is the order that appears on the title page of the application.

37 CFR 1.221(b) is applicable "only when the Office makes a material mistake which is apparent from Office records . . . Any request for a corrected publication or revised patent application publication other than provided as provided in paragraph (a) of this section must be filed within two months from the date of the patent application publication. This period is not extendable." **A material mistake must affect the public's ability to appreciate the technical disclosure of the patent application publication, to determine the scope of the patent application publication, or to determine the scope of the provisional rights that an applicant may seek to enforce upon issuance of a patent.**[1]

After reviewing the application as filed and its publication it is clear the Office correctly published the application in accordance with 37 CFR 1.215(a) and Office policy with respect to the order of the inventors. See MPEP 601.05 and 605.04(f). The application as filed listed the order of the inventors as S. Herner, M. Johnson, and N. Knall on the title page of the application; as S. Herner, N. Knall and M. Johnson on the Declaration filed with the application; and as M. Johnson, N. Knall and S. Herner on the Application Data Sheet (ADS) filed with the application. The application was published as originally filed by applicant with the inventors listed in the proper order, as listed on the ADS. The order of names of joint patentees in the heading of

[1] Changes to Implement Eighteen-Month Publication of Patent Applications, 65 FR 57023, 57038 (Sept. 20, 2000), 1239 Off. Gaz. Pat. Office Notices 63, 75 (Oct. 10, 2000) (final rule).

the patent is taken from the order of the names in the original oath or declaration filed with the application, not the order of the names on the title page of the application. See MPEP 605.04(f). However, 37 CFR 1.76(d)(2) provides that the information in the application data sheet will govern when the inconsistent information is supplied at the same time by a 37 CFR 1.63 or 37 CFR 1.67 oath or declaration.

Applicant is reminded of her duty to conduct a reasonable inquiry before filing a paper before the Office. See MPEP 410.

Applicants should file a petition under 37 CFR 1.182, to change the order of the inventors, so that any patent that may issue contains the desired order of inventors. Applications should file the petition along with an ADS listing the inventors in the proper order. See MPEP 605.04(f) and Advance Notice of Change to MPEP 605.04(b), (c) and (f) - Application Data Sheets Are Strongly Recommended When Inventor Information is Changed, 1281 Off. Gaz. Pat. Office Notices 54 (April 13, 2004).

Any request for republication under 37 CFR 1.221(a), should be submitted via the EFS system and questions should be addressed as follows:

By mail to: Mail Stop PGPUB
Commissioner for Patents
P.O. Box 1450
Alexandria, VA 22313-1450

By facsimile: 703-872-9306

The application will be examined in due course.

Inquires concerning this communication should be directed to Mark Polutta at (703) 308-8122 (voice) or (703) 746-3465 (facsimile).

Mark O. Polutta
Office of Patent Legal Administration
Office of the Deputy Commissioner
for Patent Examination Policy

Enclosure: Corrected Filing Receipt

UNITED STATES PATENT AND TRADEMARK OFFICE

Commissioner for Patents
United States Patent and Trademark Office
P.O. Box 1450
Alexandria, VA 22313-1450
www.uspto.gov

C. Douglass Thomas
BEYER WEAVER & THOMAS LLP
P.O. Box 70250
Oakland, CA 94612-0250

MAILED

APR 1 5 2005

Technology Center 2100

In re Application of:
Satyajit Nath
Application No. 10/610,832
Filed: June 30, 2003
For: METHOD AND SYSTEM FOR ENABLING USERS OF A GROUP SHARED ACROSS MULTIPLE FILE SECURITY SYSTEMS TO ACCESS SECURED FILES

DECISION ON REQUEST TO WITHDRAW AS ATTORNEY OR AGENT

This is a decision on the Request To Withdraw from Representation filed January 10, 2005.

A grantable request to withdraw as attorney of record should indicate thereon the present mailing addresses of the attorney(s) who is/are withdrawing from the record and of the applicant. The request for withdrawal must be signed by every attorney seeking to withdraw or contain a clear indication that one attorney is signing on behalf of another/others. A request to withdraw will not be approved unless at least 30 (thirty) days would remain between the date of approval and the later of the expiration date of a time to file a response or the expiration date of the maximum time period which can be extended under 37 C.F.R. § 1. 136(a). The effective date of withdrawal being the date of decision and not the date of request. See M.P.E.P. § 402.06. 37 C.F.R. § 1.36 further requires that the applicant or patent owner be notified of the withdrawal of the attorney or agent.

The request is **GRANTED**.

All future communications from the Office will be directed to the below-listed address until otherwise notified by applicant. This correspondence address is provided by the withdrawn attorney(s). Applicant is reminded of the obligation to promptly notify the Patent and Trademark Office (Office) of any change in correspondence address to ensure receipt of all communications from the Office.

for

Vincent N. Trans
Special Program Examiner
Technology Center 2100

cc: John S. Ferrell
Carr & Ferrell LLP
2200 Geng Road
Palo Alto, CA 94303

UNITED STATES PATENT AND TRADEMARK OFFICE

Commissioner for Patents
United States Patent and Trademark Office
P.O. Box 1450
Alexandria, VA 22313-1450
www.uspto.gov

COPY MAILED

FEB 16 2007

OFFICE OF PETITIONS

Carr & Ferrell LLP
2200 Geng Road
Palo Alto, CA 94303

In re Application of	:	
Satyajit Nath	:	
Application No. 10/610,832	:	DECISION ON PETITION
Filed: June 30, 2003	:	TO WITHDRAW
Attorney Docket No. SSL1P018-SS-038	:	FROM RECORD

This is a decision on the Request to Withdraw as attorney or agent of record under 37 C.F.R. § 1.36(b), filed November 20, 2006.

The request is **APPROVED**.

A grantable request to withdraw as attorney/agent of record must be signed by every attorney/agent seeking to withdraw or contain a clear indication that one attorney is signing on behalf of another/others. A request to withdraw will not be approved unless at least 30 (thirty) days would remain between the date of approval and the later of the expiration date of a time to file a response or the expiration date of the maximum time period which can be extended under 37 C.F.R. § 1.136(a).

The request was signed by Susan Yee on behalf of all attorneys of record who are associated with Customer No. 22830.

All attorneys/agents associated with the Customer No. 22830 have been withdrawn.

Applicant is reminded that there is no attorney of record at this time.

The request to change the correspondence of record is not acceptable as the requested correspondence address is not that of: (1) the first named signing inventor; or (2) an intervening assignee of the entire interest under 37 C.F.R 3.71. All future communications from the Office will be directed to the first named signing inventor at the first copied address below until otherwise properly notified by the applicant.

There is no outstanding Office action at this time.

Telephone inquiries concerning this decision should be directed to Terri Williams at 571-272-2991.

T. Williams

Terri Williams
Petitions Examiner
Office of Petitions

cc: **Satyajit Nath**
77110 Huntridge Lane
Cupertino, CA 95014

cc: **Ryan Morrison**
Invention Law Group
1756-114th Avenue SE
Suite 110
Bellevue, WA 98004

UNITED STATES PATENT AND TRADEMARK OFFICE

Commissioner for Patents
United States Patent and Trademark Office
P.O. Box 1450
Alexandria, VA 22313-1450
www.uspto.gov

BLAKELY SOKOLOFF TAYLOR & ZAFMAN LLP
1279 OAKMEAD PARKWAY
SUNNYVALE, CA 94085-4040

MAILED

JUN 04 2010

OFFICE OF PETITIONS

In re Application of Boliek et al. :
Application No. 10/610,837 :
Filing Date: June 30, 2003 :
Attorney Docket No. 74451P153 :

Decision on Petition

This is a decision on the petition under 37 C.F.R. § 1.137(b), filed January 27, 2010, to revive the above-identified application.

The petition is **dismissed**.

Any request for reconsideration must be submitted within TWO (2) MONTHS from the mail date of this decision. No further petition fee is required for the request. Extensions of time under 37 CFR 1.136(a) are permitted. The reconsideration request should include a cover letter entitled "Renewed Petition under 37 CFR 1.137(b)."

The Office mailed a final Office action on May 10, 2007. The final Office action set a shortened statutory period for reply of three (3) months. The Office received a reply to the Office action on August 13, 2007.[1] The Office mailed an Advisory Action on August 30, 2007. The Advisory Action stated the August 13, 2007 reply failed to place the application in condition for allowance. Petitioner did not file any further response to the final Office action. Therefore, the date of abandonment is August 11, 2007. The Office mailed a Notice of Abandonment on December 28, 2007.

The instant petition was filed January 27, 2010.

In order for a petition under 37 C.F.R. § 1.137(b) to be grantable, the entire delay in filing the required reply from the due date for the reply until the filing of a grantable petition pursuant to 37 C.F.R. § 1.137(b) must be unintentional.

The instant petition was filed more than two years and five months after the date of abandonment and more than two years after the Office mailed the Notice of Abandonment. Petitioner has not provided an explanation for the delay in filing the petition to revive the application.

[1] The reply included a certificate of mailing dated August 9, 2007. Therefore, the reply was timely.

Pursuant to 37 C.F.R. § 1.137(b), "The Director may require additional information where there is a question whether the delay was unintentional." Due to the extended delay in the filing of the instant petition, the Office has determined the statement in the petition asserting the entire delay was unintentional is insufficient, without more, to support a decision granting the instant petition.

The Office requests Petitioner provide an explanation for the delay in filing the petition sufficient to establish the entire delay was unintentional.

Unless filed by EFS Web, further correspondence with respect to this matter should be addressed as follows:

By mail: Mail Stop Petition
Commissioner for Patents
P.O. Box 1450
Alexandria, VA 22313-1450

By facsimile: (571) 273-8300
Attn: Office of Petitions

By hand: U.S. Patent and Trademark Office
Customer Service Window
Randolph Building
401 Dulany Street
Alexandria, VA 22314

Telephone inquiries regarding this communication should be directed to Petitions Attorney Steven Brantley at (571) 272-3203.

Charles Steven Brantley
Senior Petitions Attorney
Office of Petitions

UNITED STATES PATENT AND TRADEMARK OFFICE

Commissioner for Patents
United States Patent and Trademark Office
P.O. Box 1450
Alexandria, VA 22313-1450
www.uspto.gov

TOWNSEND AND TOWNSEND AND CREW, LLP
TWO EMBARCADERO CENTER
EIGHTH FLOOR
SAN FRANCISCO CA 94111

COPY MAILED

JUN 08 2007

OFFICE OF PETITIONS

In re Application of	:	
Schwartz et al.	:	
Application No. 10/610,839	:	ON PETITION
Filed: June 30, 2003	:	
Attorney Docket No. 017900-003010US	:	

This is a decision on the petition under 37 C.F.R. § 1.137(b), filed April 18, 2007, to revive the above-identified application.

The petition is **GRANTED.**

The petition satisfies the conditions for revival pursuant to the provisions of 37 CFR 1.137(b) in that (1) the reply in the form of a Request for Continued Examination (RCE); (2) the petition fee; and (3) the required statement of unintentional delay have been received. Accordingly, the response has been accepted as having been unintentionally delayed.

This matter is being referred to Technology Center 2100 for processing of the Request for Continued Examination under 37 CFR 1.114 filed with the instant petition.

Telephone inquiries regarding this decision should be directed to the undersigned at (571) 272-3206.

Liana Walsh
Petitions Examiner
Office of Petitions

UNITED STATES PATENT AND TRADEMARK OFFICE

COMMISSIONER FOR PATENTS
UNITED STATES PATENT AND TRADEMARK OFFICE
P.O. BOX 1450
ALEXANDRIA, VA 22313-1450
www.uspto.gov

MICHAEL J. MALLIE
C/O BLAKELY, SOKOLOFF, TAYLOR, & ZAFMAN LLP
12400 WILSHIRE BOULEVARD, SEVENTH FLOOR
LOS ANGELES, CA 90025

COPY MAILED

FEB 13 2008

OFFICE OF PETITIONS

In re Application of
William W. Macy, Jr., et al.
Application No. 10/610,929
Filed: June 30, 2003
Attorney Docket No. 042390.P15759

ON PETITION

This is a decision on the petition under 37 CFR 1.137(b), filed October 15, 2007, to revive the above-identified application.

The petition is **GRANTED**.

The application became abandoned for failure to timely file a reply within the meaning of 37 CFR 1.113 to an Office action mailed March 30, 2007. This decision precedes the mailing of a Notice of Abandonment.

The proposed reply required for consideration of a petition to revive must be a Notice of Appeal (and appeal fee required by 37 CFR 41.20(b)(2), an amendment that *prima facie* places the application in condition for allowance, a Request for Continued Examination and submission (37 CFR 1.114), or the filing of a continuing application under 37 CFR 1.53(b). See MPEP 711.03(c)(II)(A)(2).

The petition satisfies the requirements of 37 CFR 1.137(b) in that petitioner has supplied (1) the reply in the form of a Request for Continued Examination (RCE), including the fee of $810 and the submission required by 37 CFR 1.114; (2) the petition fee of $1,540; and (3) an adequate statement of unintentional delay.

This application is being referred to Technology Center AU 2193 for processing of the RCE and for appropriate action by the Examiner in the normal course of business on the amendment submitted in accordance with 37 CFR 1.114.

Telephone inquiries concerning this decision should be directed to the undersigned at (571) 272-3204. Inquiries relating to further prosecution should be directed to the Technology Center.

Sherry D. Brinkley
Petitions Examiner
Office of Petitions

IN THE UNITED STATES PATENT & TRADEMARK OFFICE

IN RE APPLICATION OF: U.S. Patent No. 7,339,871

USPTO CONFIRMATION CODE: 2541

APPLICATION NO.: 10/610,933

FILED: Jun. 30, 2003

EXAMINER: Hoa Thi Nguyen

GROUP ART UNIT: 2627

FOR: METHOD FOR ACCURATE POSITIONING OF MARKS AND SPACES ON AN OPTICAL DISC

ATTORNEY DOCKET NUMBER: 10002759-4

37 CFR 1.322 & 37 CFR 1.323 REQUEST FOR CERTIFICATE OF CORRECTION

HONORABLE COMMISSIONER OF PATENTS & TRADEMARKS

Sir:

The following is a request for a certificate of correction in Serial Number 10/610,933, now Patent Number 7,339,871.

A certificate of correction under 35 USC 254 is respectfully requested in the above-identified patent.

☐ All errors were the fault of the USPTO, no fee required. In the event that a further fee is required, please charge the amount to Deposit Account No. 082025.

☐ All errors were the fault of the applicant and, accordingly, please charge **$100.00** to our Deposit Account No. 082025. In the event that a further fee is required, please charge the amount to the same Deposit Account.

☒ The errors were the fault of both the applicant and USPTO and, accordingly, please charge **$100.00** to our Deposit Account No. 082025. In the event that a further fee is required, please charge the amount to the same Deposit Account.

The exact locations where the errors appear in the patent and patent application are as follows:

On the face page, in field (54), in "Title", line 2, after "OF" insert - - DATA - -.
(Specification filed on Jun. 30, 2003, page 1, line 1)

In column 1, line 2, in "Title", after "OF" insert - - DATA - -.
(Specification filed on Jun. 30, 2003, page 1, line 1)

In column 10, line 47, in Claim 2, insert - - further - - before "comprising".
(Amendment to claims filed on Oct. 12, 2007, page 2, in Claim 2, line 1)

In column 13, line 36, in Claim 21, after "near" insert - - the - -.
(Amendment to claims filed on Oct. 12, 2007, page 7, in Claim 14, line 9)

In column 13, line 39, in Claim 21, after "feature" delete "," and insert - - ; - -, therefor.
(Amendment to claims filed on Oct. 12, 2007, page 7, in Claim 14, line 11)

The requested corrections are attached on Form PTO 1050.

Respectfully Submitted

July 2, 2008
DATE

Manisha Chakrabarti
Name: Manisha Chakrabarti
Registration No.: 41,665

Attorney/Agent of Record

HEWLETT-PACKARD COMPANY
Intellectual Property Administration
P. O. Box 272400
Fort Collins, Colorado 80527-2400

APPROVED: /KC/ (10/07/2008)

OK TO ENTER: /KC/ (10/07/2008)

PTO/SB/44 (04-05)
Approved for use through 04/30/2007. OMB 0651-0033
U.S. Patent and Trademark Office; U.S. DEPARTMENT OF COMMERCE
Under the Paperwork Reduction Act of 1995, no persons are required to respond to a collection of information unless it displays a valid OMB control number.
(Also Form PTO-1050)

UNITED STATES PATENT AND TRADEMARK OFFICE
CERTIFICATE OF CORRECTION

PATENT NO : 7,339,871

APPLICATION NO. : 10/610,933

ISSUE DATE : Mar. 04, 2008

INVENTOR(S) : Josh Hogan

It is certified that an error appears or errors appear in the above-identified patent and that said Letters Patent is hereby corrected as shown below:

On the face page, in field (54), in "Title", line 2, after "OF" insert - - DATA - -.

In column 1, line 2, in "Title", after "OF" insert - - DATA - -.

In column 10, line 47, in Claim 2, insert - - further - - before "comprising".

In column 13, line 36, in Claim 21, after "near" insert - - the - -.

In column 13, line 39, in Claim 21, after "feature" delete "," and insert - - ; - -, therefor.

MAILING ADDRESS OF SENDER (Please do not use customer number below):

HEWLETT-PACKARD COMPANY
Intellectual Property Administration
P. O. Box 272400
Fort Collins, Colorado 80527-2400

This collection of information is required by 37 CFR 1.322, and 1.323, and 1.324. The information is required to obtain or retain a benefit by the public which is to file (and by the USPTO to process) an application. Confidentiality is governed by 35 U.S.C 122 and 37 CFR 1.14. This collection is estimated to take 1.0 hour to complete, including gathering, preparing, and submitting the completed application form to the USPTO. Time will vary depending upon the individual case. Any comments on the amount of time you require to complete this form and/or suggestions for reducing this burden, should be sent to the Chief Information Officer, U.S. Patent and Trademark Office, U.S. Department of Commerce, P.O. Box 1450, Alexandria, VA 22313-1450. DO NOT SEND FEES OR COMPLETED FORMS TO THIS ADDRESS. SEND TO: Attention Certificate of Corrections Branch, Commissioner for Patent, P.O. Box 1450, Alexandria, VA 22313-1450.

If you need assistance in completing the form, call 1-800-PTO-9199 and select option 2.

UNITED STATES PATENT AND TRADEMARK OFFICE

Commissioner for Patents
United States Patent and Trademark Office
P.O. Box 1450
Alexandria, VA 22313-1450
www.uspto.gov

SEP 12 2005

RATNERPRESTIA
P.O. BOX 980
VALLEY FORGE, PA 19482-0980

In re application of David Myr Application No. 10/610,955 Filed: July 01, 2003 For: METHOD AND SYSTEM FOR OPTIMIZED REAL ESTATE APPRAISAL	: : : :	**DECISION ON PETITION TO MAKE SPECIAL (APPLICANT'S AGE)**

This is a decision on the petition submitted on July 13, 2005 under 37 CFR 1.102 (c) to make the above-identified application special under the accelerated examination procedure set forth in MPEP 708.02, Section IV: Applicant's Age.

The petition is **GRANTED**.

An application may be accorded special status upon the filing of a petition providing evidence showing that the applicant is at least 65 years old. Such a showing may be provided by evidence such as a birth certificate or a statement from the applicant.

The evidence submitted with the petition is a signed declaration and a passport indicating Mr. Myr is at least 65 years of age.

The examiner is directed (1) to make an interference search for possible interfering applications, (2) to promptly examine this application out of turn, and (3) if any interfering application is discovered, to examine such application simultaneously and state in the first official letter of such application that it is being taken out of turn because of a possible interference.

Petitioner is advised that this application will continue to be special, throughout its entire prosecution and pendency, including interference or appeal, if any, only if petitioners makes a prompt ***bona fide*** effort, in response to each Office action, to place the application in condition for allowance, even if it is necessary to conduct an interview with the examiner to accomplish this purpose.

SUMMARY: Petition to Make Special **GRANTED**.

Kenneth J. Dorner
Special Programs Examiner
Technology Center 3600
(571) 272-6587

KJD/slb: 07/21/05

UNITED STATES PATENT AND TRADEMARK OFFICE

Commissioner for Patents
United States Patent and Trademark Office
P.O. Box 1450
Alexandria, VA 22313-1450
www.uspto.gov

MAILED

SEP 08 2004

TECHNOLOGY CENTER 2100

ERIC A. STEPHENSON
CAMPBELL, STEPHENSON, ASCOLESE, LLP
4807 SPICEWOOD SPRINGS RD.
BLDG. 4, SUITE 201
AUSTIN, TX 78759

In re Application of: Kiselev, et al.
Application No. 10/610,966
Filed: July 1, 2003
For: AUTOMATED RECOVERY FROM DATA CORRUPTION OF DATA VOLUMES IN RAID STORAGE

DECISION ON PETITION
TO MAKE SPECIAL
(ACCELERATED EXAMINATION)
UNDER M.P.E.P. §708.02 (VIII)

This is a response to the petition filed May 17, 2004, under 37 C.F.R. §1.102(d) and M.P.E.P. §708.02 (VIII): Accelerated Examination, to make the above-identified application special.

The Petition is **DISMISSED**.

M.P.E.P. §708.02, Section VIII which sets out the prerequisites for a grantable petition for Accelerated Examination under 37 C.F.R. §1.102(d) states in relevant part:

A new application (one which has not received any examination by the examiner) may be granted special status provided that applicant (and this term includes applicant's attorney or agent) complies with each of the following items:

(a) Submits a petition to make special accompanied by the fee set forth in 37 CFR 1.17(h);

(b) Presents all claims directed to a single invention, or if the Office determines that all the claims presented are not obviously directed to a single invention, will make an election without traverse as a prerequisite to the grant of special status;

(c) Submits a statement(s) that a pre-examination search was made, listing the field of search by class and subclass, publication, Chemical Abstracts, foreign patents, etc. The pre-examination search must be directed to the invention as claimed in the application for which special status is requested. A search made by a foreign patent office satisfies this requirement;

(d) Submits one copy each of the references deemed most closely related to the subject matter encompassed by the claims if said references are not already of record; and

(e) Submits a detailed discussion of the references, which discussion points out, with the particularity required by 37 CFR 1.111 (b) and (c), how the claimed subject matter is patentable over the references.

The petition filed May 24, 2004 fails to adequately meet requirement (e) of the criteria set forth above. With respect to requirement (e), a complete detailed discussion of the (aforementioned most closely related) references has not been provided with the necessary specificity required under 37 CFR 1.111 (b) and (c). Specifically, Petitioner should ensure that the above discussion is directed to how the language of ***each of*** the independent claims is specifically distinguishable and patentable from the references provided in requirement (d) above. Note, at least independent claim 22 differs slightly in scope from the discussion presented in the petition with respect to independent claim 1.

Petition to Make Special **DISMISSED**.

Petitioner is given one opportunity to perfect the petition. Any request for reconsideration must be filed within TWO MONTHS of the mail date of this decision. Extensions of time under 37 CFR 1.136(a) are permitted by a declaration or statement providing the information as outlined above.

Until the renewed petition is submitted, the application will be returned to the examiner's docket to await treatment on the merits in the normal order of examination.

Brian L. Johnson
Special Program Examiner
Technology Center 2100
Computer Architecture, Software and Information Security
703-308-0885

BLJ: 9/07/04

UNITED STATES PATENT AND TRADEMARK OFFICE

Commissioner for Patents
United States Patent and Trademark Office
P.O. Box 1450
Alexandria, VA 22313-1450
www.uspto.gov

MAIL

MAR - 3 2005

DIRECTOR OFFICE
TECHNOLOGY CENTER 2100

ERIC A. STEPHENSON
CAMPBELL, STEPHENSON, ASCOLESE, LLP
4807 SPICEWOOD SPRINGS RD.
BLDG. 4, SUITE 201
AUSTIN, TX 78759

In re Application of: Kiselev, et al.
Application No. 10/610,966
Filed: July 1, 2003
For: AUTOMATED RECOVERY FROM DATA CORRUPTION OF DATA VOLUMES IN RAID STORAGE

DECISION ON PETITION TO MAKE SPECIAL (ACCELERATED EXAMINATION) UNDER M.P.E.P.§708.02(VIII)

This is a decision on the renewed petition filed December 6, 2004 under 37 C.F.R. 102(d) and M.P.E.P. § 708.02(VIII): Accelerated Examination, to make the above-identified application special.

The Petition is **GRANTED**.

M.P.E.P. § 708.02, Section VIII which sets out the prerequisites for a grantable petition for Accelerated Examination under 37 C.F.R. § 102(d) states in relevant part:

A new application (one which has not received any examination by the examiner) may be granted special status provided that applicant (and this term includes applicant's attorney or agent) complies with each of the following items:

(a) Submits a petition to make special accompanied by the fee set forth in 37 CFR 1.17(h);

(b) Presents all claims directed to a single invention, or if the Office determines that all the claims presented are not obviously directed to a single invention, will make an election without traverse as a prerequisite to the grant of special status;

(c) Submits a statement(s) that a pre-examination search was made, listing the field of search by class and subclass, publication, Chemical Abstracts, foreign patents, etc. The pre-examination search must be directed to the invention as claimed in the application for which special status is requested. A search made by a foreign patent office satisfies this requirement;

(d) Submits one copy each of the references deemed most closely related to the subject matter encompassed by the claims if said references are not already of record; and

(e) Submits a detailed discussion of the references, which discussion points out, with the particularity required by 37 CFR 1.111 (b) and (c), how the claimed subject matter is patentable over the references.

Petition to Make Special **GRANTED** since all of the requirements for special status under MPEP § 708.02(VIII) have been met.

The application file is being forwarded to the Examiner for accelerated examination in accordance with the procedures set forth in M.P.E.P. §708.02, Section VIII. If the application is subsequently allowed, it will be given priority for printing. See M.P.E.P. §1309.

Brian L. Johnson
Special Program Examiner
Technology Center 2100
Computer Architecture, Software and Information Security
571-272-3595

2/25/05

SDL

UNITED STATES PATENT AND TRADEMARK OFFICE

Commissioner for Patents
United States Patent and Trademark Office
P.O. Box 1450
Alexandria, VA 22313-1450
www.uspto.gov

FORD GLOBAL TECHNOLOGIES, LLC
FAIRLANE PLAZA SOUTH, SUITE 800
330 TOWN CENTER DRIVE
DEARBORN, MI 48126

COPY MAILED

JUL 06 2007

OFFICE OF PETITIONS

In re Application of

Dahl, et al. :

Application No. 10/610,972

: DECISION ON PETITION

Filed: July 1, 2003

:

Attorney Docket No. 201,0998

This is a decision on the petition under 37 CFR 1.137(b), filed, February 26, 2007, to revive the above-identified application.

The petition is **GRANTED**.

The above-cited application became abandoned for failure to reply in a timely manner to the Notice of Non-Compliant Amendment mailed March 22, 2006, which set a shortened statutory period for reply of one (1) month from its mailing date. No further response was filed within the allowable period, and the application became abandoned on February 22, 2006.

The amendment filed February 26, 2007, is noted.

The request for an extension of time within the fourth month is noted, but cannot be granted as the request was made outside the maximum extendable period for reply. The amount of $1,590.00 will be refunded to deposit account 06-1510, in due course.

The application is being forwarded to Technology Center 3700, GAU 3782 for further processing.

Telephone inquiries concerning this decision should be directed to the undersigned at (571) 272-3222.

Kenya A. McLaughlin
Petitions Attorney
Office of Petitions

UNITED STATES PATENT AND TRADEMARK OFFICE

Commissioner for Patents
United States Patent and Trademark Office
P.O. Box 1450
Alexandria, VA 22313-1450
www.uspto.gov

AT&T Legal Department - CC
Attn: Patent Docketing
Room 2A-207
One AT&T Way
Bedminster, NJ 07921

MAILED

MAY 19 2009

OFFICE OF PETITIONS

In re Application of Donna K. Hodges, et. al. Application No. 10/610,976 Filed: June 30, 2003 Attorney Docket No. 030005 (BLL-0014)	: : : : :	ON PETITION

This is a decision on the petition under 37 CFR 1.137(b), filed April 1, 2009, to revive the above-identified application.

The petition satisfies the requirements of 37 CFR 1.137(b) in that petitioner has supplied (1) the reply in the form of a Request for Continued Examination (RCE) and required submission under 37 CFR 1.114 with the fee of $810; (2) the petition fee of $1,620; and (3) a proper statement of unintentional delay. Therefore, the petition is **GRANTED**.

A review of the record fails to indicate that a change of address has been submitted. Since the address given on the petition differs from the address of record, a courtesy copy of this decision is being mailed to the address on the petition. Thereafter, all future correspondence regarding this application will be directed solely to the address of record until otherwise instructed. If appropriate, a change of address should be filed in accordance with MPEP 601.03.

This application file is being referred to Technology Center Art Unit 2444 for processing of the RCE and for appropriate action by the Examiner in the normal course of business on the amendment filed with the present petition.

Telephone inquiries concerning this decision should be directed to the undersigned at (571) 272-3226.

Andrea Smith
Petitions Examiner
Office of Petitions

cc: David A. Fox
Cantor Colburn, LLP
20 Church Street, 22nd Floor
Hartford, CT 06103-3207

UNITED STATES PATENT AND TRADEMARK OFFICE

Commissioner for Patents
United States Patent and Trademark Office
P.O. Box 1450
Alexandria, VA 22313-1450
www.uspto.gov

BACHMAN & LAPOINTE, P.C.
900 CHAPEL STREET
SUITE 1201
NEW HAVEN CT 06510

In re Application of:
Dobmeier, Thomas J. et al
Serial No.: 10/610,984
Filed: Jun. 30, 2003
Docket: PA-057.10560(03-316)
Title: HUMIDITY CONTROL UTILIZING HEAT PUMP CONCEPT

DECISION ON PETITION TO WITHDRAW HOLDING OF FINALITY

This is a decision on the petition filed on Mar. 27, 2008 to withdraw the finality of the Office Action of Feb. 25, 2008. The petition is being considered pursuant to 37 CFR § 1.181 and no fee is required for the petition.

The petition is dismissed.

In the petition, the applicants requested withdrawal of the finality of the Office action dated Feb. 25, 2008. Petitioner claims that the finality of the Office action is premature because the amendment of Dec. 7, 2007 did not necessitate the new grounds of rejection.

The record shows that:

1. On Jun. 7, 2007 the examiner mailed a non-final Office action. In the non-final Office action, claims 16-24 and 26-27 were rejected under 35 U.S.C. § 102 as anticipated by, or in the alternative, under 35 U.S.C. § 103 (a) as obvious over Fukushiro et al (JP. Pat. Publication 2001165527). The examiner specifically rejected claims 20, 24 and 27 based on obvious matter of design. The examiner held that the use of heating/cooling circuits having components of different sizes, as set forth in claims 20, 24, and 27, is considered to be an obvious matter of engineering design based upon the needs of a particular installation claims.
2. In response to the non-final Office action mailed Jun. 7, 2007, the applicant filed an amendment on Dec. 7, 2007, *inter alia*, amending some claims and specifically arguing that the features claimed in claims 20, 24 and 27 were not an obvious matter of choice (see page 5 of the Remarks). Independent claims 20 and 27 were not amended in the amendment.
3. On Feb. 25, 2008, the examiner issued a final Office action. In the final Office action, claims 17-20, 23 and 27 were rejected under rejected under 35 USC 103(a) as obvious

over Fukushiro et al (JP. Pat. Publication 2001165527) in view of Hirakawa et al (JP 071869947). The prior art patent to Hirakawa was applied against the claims for the sole purpose of rebutting the applicant's arguments regarding the claimed features in claims 20, 24 and 27 are not an obvious matter of design choice.

4. The present petition, filed on Mar. 27, 2008 requests withdrawal of the finality of the Office action mailed on Feb. 25, 2008 as premature.

Discussion and Analysis

The relevant portion of MPEP § 706.07(a): Final Rejection, When Proper on Second Action, states:

> Under present practice, second or any subsequent actions on the merits shall be final, except where the examiner introduces a new ground of rejection that is neither necessitated by applicant's amendment of the claims nor based on information submitted in an information disclosure statement filed during the period set forth in 37 CFR 1.97(c) with the fee set forth in 37 CFR 1.17(p).

MPEP 2144.03 states: Reliance on Common Knowledge in the Art or "Well Known" Prior Art [R-6]

> *D. Determine Whether the Next Office Action Should Be Made Final*
>
> If the examiner adds a reference in the next Office action after applicant's rebuttal, and the newly added reference is added only as directly corresponding evidence to support the prior common knowledge finding, and it does not result in a new issue or constitute a new ground of rejection, the Office action may be made final. If no amendments are made to the claims, the examiner must not rely on any other teachings in the reference if the rejection is made final. If the newly cited reference is added for reasons other than to support the prior common knowledge statement and a new ground of rejection is introduced by the examiner that is not necessitated by applicant's amendment of the claims, the rejection may not be made final. See MPEP § 706.07(a).

Petitioner requests withdrawal of the finality of the Office action mailed Feb. 25, 2008. Petitioner asserts that a second action on the merits should not be made final because at least claims 20 and 27 were never amended. The rejection of claims 20 and 27 based on a new reference is clearly a new ground of rejection that was not necessitated by any claim amendment from the applicant. Petitioner relies on MPEP §706.07(a) to support his contention.

This line of arguments is not convincing. The issue in the current petition is whether a new reference was necessitated by the applicant's challenge of the holding of the examiner that the use of heating/cooling circuits having components of different sizes is considered to be an obvious matter of engineering design based upon the needs of a particular installation. A review of the Hirakawa patent does disclose different capacity for the circuits and sizes (Table 1) in the same field of endeavor for the purpose of controlling conditioned air. The examiner went on to conclude that it would have been obvious to one having ordinary skill in the art at the time the invention was made to modify the apparatus of Fukushiro et al. with different sizes in the circuits in view of Hirakawa et al. so as to improve controlling performance.

Based on the record, upon the challenge of the applicant's argument that the features were not obvious matter of design, it is proper for the examiner to introduce a new reference in a new

ground of rejection to support the examiner original position and made the rejection final (see MPEP § 2144.03). The final rejection of Feb. 25, 2008 was in compliance with proper examining practice as set forth in MPEP § 706.07(a) and MPEP § 2144.03. The finality of the Office action is appropriate.

Conclusion

For the foregoing reasons, the relief requested by petitioner will not be granted. Specifically, the finality of the Office action dated Feb. 25, 2008 is proper.

The application is being forwarded to Art Unit 3744 for waiting applicant's response to the final rejection of Feb. 25, 2008. Any request for reconsideration of this decision must be submitted within TWO (2) MONTHS from the mail date of this decision, 37 CFR § 1.181(f). No extension of time under 37 CFR 1.136(a) is permitted. The reconsideration request should include a cover letter entitled "Renewed Petition under 37 CFR 1.181." Any inquiry regarding this decision should be directed to Henry Yuen, Special Programs Examiner, at (571) 272-4856.

PETITION DISMISSED.

Karen M. Young

Karen M. Young, Director
Technology Center 3700

UNITED STATES PATENT AND TRADEMARK OFFICE

Commissioner for Patents
United States Patent and Trademark Office
P.O. Box 1450
Alexandria, VA 22313-1450
www.uspto.gov

COPY MAILED

FEB 07 2007

OFFICE OF PETITIONS

SCHWEGMAN, LUNDBERG, WOESSNER & KLUTH, P.A.
P.O. BOX 2938
MINNEAPOLIS MN 55402

In re Application of :
Max Copperman et al :
Application No. 10/610,994 : ON PETITION
Filed: July 1, 2003 :
Attorney Docket No. 1546.001US3 :

This is a decision on the petition, filed February 5, 2007, under 37 CFR 1.313(c)(2) to withdraw the above-identified application from issue after payment of the issue fee.

The petition is **GRANTED.**

The above-identified application is withdrawn from issue for consideration of a submission under 37 CFR 1.114 (request for continued examination). See 37 CFR 1.313(c)(2).

Petitioner is advised that the issue fee paid on September 21, 2006 in the above-identified application cannot be refunded. If, however, the above-identified application is again allowed, petitioner may request that it be applied towards the issue fee required by the new Notice of Allowance.[1]

Telephone inquiries should be directed to the undersigned at (571) 272-3208.

The examiner of Technology Center AU 2164 will consider the request for continued examination under 37 CFR 1.114.

Karen Creasy

Karen Creasy
Petitions Examiner
Office of Petitions

---

[1] The request to apply the issue fee to the new Notice may be satisfied by completing and returning the new Issue Fee Transmittal Form PTOL-85(b), which includes the following language thereon: "Commissioner for Patents is requested to apply the Issue Fee and Publication Fee (if any) or re-apply any previously paid issue fee to the application identified above." Petitioner is advised that, whether a fee is indicated as being due or not, the Issue Fee Transmittal Form **must** be completed and timely submitted to avoid abandonment. Note the language in bold text on the first page of the Notice of Allowance and Fee(s) Due (PTOL-85).

SPE FLYNN

SPE RESPONSE FOR CERTIFICATE OF CORRECTION 10/610,996

Paper No.: _____

DATE : 2/6/06

TO SPE OF : ART UNIT 2826

SUBJECT : Request for Certificate of Correction on Patent No.: 6955968

A response is requested with respect to the accompanying request for a certificate of correction.

Please complete this form and return with file, within 7 days to:
Palm location **7580, Certificates of Correction Branch – South Tower – 9A22**
If response is for an IFW, **return to employee (named below) via PUBSCofC Team in MADRAS.**
With respect to the change(s) requested, correcting Office and/or Applicant's errors, should the patent read as shown in the certificate of correction (COCIN)? No new matter should be introduced, nor should the scope or meaning of the claims be changed.

Thank You For Your Assistance

Lamonte M. Newsome
Certificates of Correction Branch
Tel. No. 703-305-8309

The request for issuing the above-identified correction(s) is hereby:
Note your decision on the appropriate box.

- [x] **Approved** — All changes apply.
- [ ] **Approved in Part** — Specify below which changes **do not** apply.
- [ ] **Denied** — State the reasons for denial below.

Comments:

_____

_____

_____

_____

_____

SPE — 2826 **Art Unit**

PTOL-306 (REV. 7/03) U.S. DEPARTMENT OF COMMERCE Patent and Trademark Office

UNITED STATES PATENT AND TRADEMARK OFFICE

OFFICE

SERIAL NUMBER	FILING DATE	FIRST NAMED APPLICANT	ATTORNEY DOCKET NO.
10/611001	7/1/03	Janssens Bart	02/038MFE

ProPat, L.L.C.
425-C South Sharon Amity Road
Charlotte NC 28211-2815

EXAMINER	
CHEN, VIVIAN	
ART UNIT	PAPER NUMBER
1773	

DATE MAILED: 9/14/04

NOTICE OF RESCINDED ABANDONMENT

☐ **In response to your communication filed _____**

☒ **Through inadvertence, a Notice of Abandonment was mailed in the above-identified application. The Notice of Abandonment is hereby rescinded. ~~The issue fee receipt will be mailed within six weeks~~.**

For Manager, Publishing Division
Office of Patent Publication

Attorney's Docket No. 02/038 MFE
Customer No. 38263

PATENT

IN THE UNITED STATES PATENT AND TRADEMARK OFFICE

In re Application of: Janssens, *et al.*

Group Art Unit: 1773

Application No. 10/611,001

Examiner: V. Chen

Filed: July 1, 2003

Confirmation No.: 6025

For: MULTILAYER, TRANSPARENT, SEALABLE, BIAXIALLY ORIENTED POLYESTER FILM, ITS USE AND PROCESS FOR ITS PRODUCTION

Mail Stop Petition
Commissioner for Patents
P.O. Box 1450
Alexandria, VA 22313-1450

RECEIVED
SEP 13 2004
CUSTOMER SERVICE
PUBLISHING DIVISION

PETITION UNDER 37 CF.R. 1.181 TO WITHDRAW HOLDING OF ABANDONMENT

Sir:

Applicants hereby petition to have the holding of abandonment noted on the PAIR system as having been issued on September 9, 2004 in the above-identified application withdrawn. The application appears to be held to be abandoned for failure to respond to the Notice of Drawing Inconsistency mailed June 7, 2004. The following materials are submitted in support of Applicants' petition:

1. a copy of the Amendment submitted June 10, 2004, instructing the insertion of description for Figure 3 into the Specification, including a Certificate of Facsimile Transmission dated June 10, 2004 and

2. a copy of subsequent Transmit Confirmation Report, also dated June 10, 2004.

In view of the foregoing remarks and the enclosed evidence of timely filed Amendment placing the above-referenced application in condition for issuance, Applicants respectfully request that the instant petition be granted and that the holding of abandonment of the application be withdrawn.

It is believed that the present petition is treated as a petition under 37 C.F.R. 1.181, and that no fee is applicable. However, if any fee is due, please charge the fee to Deposit Account No. 50-2193.

Respectfully submitted,

K. Schweitzer

Klaus Schweitzer
(See attached Limited Recognition Form)

ProPat, L.L.C.
425-C South Sharon Amity Road
Charlotte, NC 28211-2841
Telephone: (704) 365-4881
Fax: (704) 365-4851
Customer No. 38263

CERTIFICATE OF FACSIMILE TRANSMISSION

I hereby certify that this correspondence is being facsimile transmitted to the United States Patent and Trademark Office at facsimile number (703) 308-5065 on September 10, 2004.

Claire Wygand

Claire Wygand

PROPAT LLC ::7043654851

** Transmit Conf.Report **

P.1 Jun 10 2004 15:21

Telephone Number	Mode	Start	Time	Page	Result	Note
17033054372	NORMAL	10,15:21	1'01"	6	# O K	

TS 6-10-04

425-C South Sharon Amity Road
Charlotte, NC 28211-2841
Phone: (704) 365-4881
Fax: (704) 365-4851

ProPat, L.L.C.

Fax

To:	USPTO Publications	**From:**	Claire Wygand for Klaus Schweitzer Phone: (704) 365-4881 Fax: (704) 365-4851
Fax:	(703) 305-4372 Publications	**Pages:**	6 pages total: Transmittal sheet (1 page) Limited Recognition Form (1 page) Response to Notice of Drawing Inconsistency (4 pages)
Phone:		**Date:**	June 10, 2004
Re:	Application No. 10/611,001 Filing Date: July 1, 2003 Our Ref.: 02/038 MFE Deposit account **50-2193**	**CC:**	

Attached is a Response to Notice of Drawing Inconsistency for the above case with a copy of the Limited Recognition under 37 C.F.R. § 10.9(b) for Klaus Schweitzer.

425-C South Sharon Amity Road
Charlotte, NC 28211-2841
Phone: (704) 365-4881
Fax: (704) 365-4851

ProPat, L.L.C.

Fax

To:	USPTO Publications	**From:**	Claire Wygand for Klaus Schweitzer Phone: (704) 365-4881 Fax: (704) 365-4851
Fax:	(703) 305-4372 Publications	**Pages:**	6 pages total: Transmittal sheet (1 page) Limited Recognition Form (1 page) Response to Notice of Drawing Inconsistency (4 pages)
Phone:		**Date:**	June 10, 2004
Re:	Application No. 10/611,001 Filing Date: July 1, 2003 Our Ref.: 02/038 MFE Deposit account **50-2193**	**CC:**	Beate (7p95)

Attached is a Response to Notice of Drawing Inconsistency for the above case with a copy of the Limited Recognition under 37 C.F.R. § 10.9(b) for Klaus Schweitzer.

Respectfully submitted,

Claire Wygandl

Claire Wygandl

BEFORE THE OFFICE OF ENROLLMENT AND DISCIPLINE
UNITED STATES PATENT AND TRADEMARK OFFICE

LIMITED RECOGNITION UNDER 37 CFR § 10.9(b)

Klaus Schweitzer is hereby given limited recognition under 37 CFR § 10.9(b) as an employee of ProPat, L.L.C. to prepare and prosecute U.S. patent applications wherein the applicant is the client of ProPat, L.L.C., and the attorney of record in the applications is Mr. Gregory Clements (Reg. No. 30,713). This limited recognition shall expire on the date appearing below, or when whichever of the following events first occurs prior to the date appearing below: (i) Klaus Schweitzer ceases to lawfully reside in the United States, (ii) Klaus Schweitzer's employment with ProPat, L.L.C. ceases or is terminated, or (iii) Klaus Schweitzer ceases to remain or reside in the United States on an E2 visa.

This document constitutes proof of such recognition. The original of this document is on file in the Office of Enrollment and Discipline of the U.S. Patent and Trademark Office.

Expires: November 6, 2004

Harry I. Moatz
Director of Enrollment and Discipline

REMARKS

Claims 1 through 9 were allowed within the Notice of Allowance of February 4, 2004.

The Examiner kindly entered an Examiner's Amendment on January 25, 2004, describing Figures 1 and 2 within the Specification.

A brief description of Figure 3 has similarly been inserted, based on the description on Page 21, lines 9 through 18 of the Application-as-filed.

Accordingly, withdrawal of the outstanding Notice of Drawing Inconsistency With Specification and formal issuance of the allowed claims are earnestly solicited. It is requested that the Examiner telephone the undersigned if any questions remain to expedite examination of this application.

It is not believed that fees are required, beyond those that may otherwise be provided for in documents accompanying this paper. However, in the event that additional fees are necessary to allow consideration of this paper, the fees are hereby authorized to be charged to Deposit Account No. 50-2193.

Respectfully submitted,

K. Schweitzer

Klaus Schweitzer
(See attached Limited Recognition Form)

ProPat, L.L.C.
425-C South Sharon Amity Road
Charlotte, North Carolina 28211-2841
Telephone: (704) 365-4881
Fax: (704) 365-4851

CERTIFICATE OF FACSIMILE TRANSMISSION

I hereby certify that this correspondence is being transmitted to the United States Patent and Trademark Office at facsimile number (703) 305-4372 on June 10, 2004.

Claire Wygand

Claire Wygand

UNITED STATES PATENT AND TRADEMARK OFFICE

UNITED STATES DEPARTMENT OF COMMERCE
United States Patent and Trademark Office
Address: COMMISSIONER FOR PATENTS
P.O. Box 1450
Alexandria, Virginia 22313-1450
www.uspto.gov

APPLICATION NO.	FILING DATE	FIRST NAMED INVENTOR	ATTORNEY DOCKET NO.	CONFIRMATION NO.
10/611,011	07/01/2003	William Drew Krietzman	18312.059	2483

21878 7590 04/27/2005

KENNEDY COVINGTON LOBDELL & HICKMAN, LLP
214 N. TRYON STREET
HEARST TOWER, 47TH FLOOR
CHARLOTTE, NC 28202

EXAMINER
PATEL, DHIRUBHAI R

ART UNIT	PAPER NUMBER
2831	

DATE MAILED: 04/27/2005

Please find below and/or attached an Office communication concerning this application or proceeding.

UNITED STATES PATENT AND TRADEMARK OFFICE

Commissioner for Patents
United States Patent and Trademark Office
P.O. Box 1450
Alexandria, VA 22313-1450
www.uspto.gov

Paper No. 04012005

KENNEDY COVINGTON LOBDELL & HICKMAN, LLP
214 N. TRYON STREET
HEARST TOWER, 47TH FLOOR
CHARLOTTE, NC 28202

APR 26 2005

In re Application of:
KRIETZMAN ET AL.
Serial No.: 10/611,011
Filed: July 1, 2003
Attorney Docket No.: **18312.059**

SUA SPONTE
DECISION WITHDRAWING HOLDING OF ABANDONMENT

This is a decision, *sua sponte*, withdrawing the holding of abandonment of the above-identified application.

The application was held abandoned for failure to timely file a response to the Final Office action mailed on June 3, 2004. A Notice of Abandonment was mailed on December 16, 2004.

A review of the written record indicates that a Final Office action was mailed on June 3, 2004 setting a three-month shortened statutory period for reply. The review also reveals that a response was filed on December 3, 2004 in response to the Final Office action mailed on June 3, 2004. The review further reveals that a Request for Continued Examination, an Amendment and a Petition for Extension of Time for three months was filed on December 3, 2004, but neither was matched with the application file prior to the mailing of the Notice of Abandonment. The examiner held the application to be abandoned based on applicant's failure to timely reply to the June 3, 2004 Final Office action.

The Request for Continued Examination, the Amendment and the Petition for Extension of Time for three months was a timely response to the June 3, 2004 Final Office action, therefore the abandonment of the application was premature. The application was not abandoned in fact.

For the above stated reason, the Notice of Abandonment is hereby vacated and the holding of abandonment withdrawn. The application is restored to pending status.

Inquiries related to this decision should be directed to Jose' G. Dees at (571) 272-1569.

Richard K. Seidel, Director
Technology Center 2800
Semiconductors, Electrical and Optical
Systems and Components

UNITED STATES PATENT AND TRADEMARK OFFICE

Commissioner for Patents
United States Patent and Trademark Office
P.O. Box 1450
Alexandria, VA 22313-1450
www.uspto.gov

BRINKS HOFER GILSON & LIONE
P. O. BOX 10395
CHICAGO, IL 60610

COPY MAILED

SEP 1 0 2007

OFFICE OF PETITIONS

In re Application of	:
Scott M. Opie et al	:
Application No. 10/611,012	: DECISION GRANTING PETITION
Filed: July 1, 2003	: UNDER 37 CFR 1.313(c)(2)
Attorney Docket No. 11336/110	:

This is a decision on the petition, filed September 7, 2007, under 37 CFR 1.313(c)(2) to withdraw the above-identified application from issue after payment of the issue fee.

The petition is **GRANTED**.

The above-identified application is withdrawn from issue for consideration of a submission under 37 CFR 1.114 (request for continued examination). See 37 CFR 1.313(c)(2).

Petitioner is advised that the issue fee paid on July 30, 2007 in the above-identified application cannot be refunded. If, however, the above-identified application is again allowed, petitioner may request that it be applied towards the issue fee required by the new Notice of Allowance.[1]

Telephone inquiries should be directed to the undersigned at (571) 272-3218.

This matter is being referred to Technology Center AU 2615 for processing of the request for continued examination under 37 CFR 1.114 and for consideration of the Information Disclosure Statement.

Frances Hicks
Petitions Examiner
Office of Petitions

C:\Documents and Settings\fhicks\My Documents\470\Sept10\611012.wpd

---

[1] *The request to apply the issue fee to the new Notice may be satisfied by completing and returning the new Part B – Fee(s) Transmittal Form (along with any balance due at the time of submission). Petitioner is advised that the Issue Fee Transmittal Form **must** be completed and timely submitted to avoid abandonment.*

UNITED STATES PATENT AND TRADEMARK OFFICE

Commissioner for Patents
United States Patent and Trademark Office
P.O. Box 1450
Alexandria, VA 22313-1450
www.uspto.gov

BLAKELY SOKOLOFF TAYLOR & ZAFMAN
1279 OAKMEAD PARKWAY
SUNNYVALE, CA 94085-4040

COPY MAILED

MAY 14 2008

OFFICE OF PETITIONS

In re Application of :
Hok-kin Choi, et al. :
Application No. 10/611,029 :
Filed: June 30, 2003 :
Attorney Docket No. 42P16678 :

ON PETITION

This is a decision in response to the petition, filed September 10, 2007, to revive the above-identified application under the provisions of 37 CFR 1.137(b).

The petition is **DISMISSED**.

Any request for reconsideration of this decision must be submitted within TWO (2) MONTHS from the mail date of this decision. Extensions of time under 37 CFR 1.136(a) are permitted. The reconsideration request should include a cover letter entitled "Renewed Petition under 37 CFR 1.137(b)." This is **not** a final agency action within the meaning of 5 U.S.C. § 704.

A grantable petition under 37 CFR 1.137(b)[1] must be accompanied by: (1) the required reply,[2] unless previously filed; (2) the petition fee as set forth in 37 CFR 1.17(m); (3) a statement that the entire delay in filing the required reply from the due date for the reply until the filing of a grantable petition pursuant to 37 CFR 1.137(b) was unintentional; and (4) any terminal disclaimer (and fee as set forth in 37 CFR 1.20(d)) required by 37 CFR 1.137(c). Where there is a question as to whether either the abandonment or the delay in filing a petition under 37 CFR 1.137 was unintentional, the Commissioner may require additional information. See MPEP 711.03(c)(II)(C) and (D). The instant petition lacks item 1.

It is noted that an amendment was included with the petition filed on September 10, 2007. However, the amendment is considered non-responsive, since it did not place the application in condition for allowance. See the attached Advisory Action. The proposed reply required for consideration of a petition to revive this application must be a Notice of Appeal (and appeal fee required by 37 CFR 1.17(b)), an amendment that *prima facie* places the application in condition for allowance, or the filing of a submission under 37 CFR 114 (RCE) or a continuing application under 37 CFR 1.53(b). See MPEP 711.03(c)(II)(A)(2).

---

[1] As amended effective December 1, 1997. See Changes to Patent Practice and Procedure; Final Rule Notice, 62 Fed. Reg. 53131, 53194-95 (October 10, 1997), 1203 Off. Gaz. Pat. Office 63, 119-20 (October 21, 1997).

[2] In a nonprovisional application abandoned for failure to prosecute, the required reply may be met by the filing of a continuing application. In an application or patent, abandoned or lapsed for failure to pay the issue fee or any portion thereof, the required reply must be the payment of the issue fee or any outstanding balance thereof.

Further correspondence with respect to this matter should be addressed as follows:

By mail: Mail Stop PETITION
Commissioner for Patents
Post Office Box 1450
Alexandria, VA 22313-1450

By hand: U.S. Patent and Trademark Office
Customer Service Window, Mail Stop PETITION
Randolph Building
401 Dulany Street
Alexandria, VA 22314

The centralized facsimile number is **(571) 273-8300**.

Any questions concerning this matter may be directed to the undersigned at (571) 272-3204.

Sherry D. Brinkley
Petitions Examiner
Office of Petitions

Attachment: Advisory Action

Advisory Action Before the Filing of an Appeal Brief	Application No.	Applicant(s)	
	10/611,029	CHOI ET AL.	
	Examiner	Art Unit	
	SAM P. SIEFKE	1797	

--The MAILING DATE of this communication appears on the cover sheet with the correspondence address --

THE REPLY FILED 10 September 2007 FAILS TO PLACE THIS APPLICATION IN CONDITION FOR ALLOWANCE.

1. The reply was filed after a final rejection, but prior to or on the same day as filing a Notice of Appeal. To avoid abandonment of this application, applicant must timely file one of the following replies: (1) an amendment, affidavit, or other evidence, which places the application in condition for allowance; (2) a Notice of Appeal (with appeal fee) in compliance with 37 CFR 41.31; or (3) a Request for Continued Examination (RCE) in compliance with 37 CFR 1.114. The reply must be filed within one of the following time periods:

a) The period for reply expires *3* months from the mailing date of the final rejection.

b) The period for reply expires on: (1) the mailing date of this Advisory Action, or (2) the date set forth in the final rejection, whichever is later. In no event, however, will the statutory period for reply expire later than SIX MONTHS from the mailing date of the final rejection.

Examiner Note: If box 1 is checked, check either box (a) or (b). ONLY CHECK BOX (b) WHEN THE FIRST REPLY WAS FILED WITHIN TWO MONTHS OF THE FINAL REJECTION. See MPEP 706.07(f).

Extensions of time may be obtained under 37 CFR 1.136(a). The date on which the petition under 37 CFR 1.136(a) and the appropriate extension fee have been filed is the date for purposes of determining the period of extension and the corresponding amount of the fee. The appropriate extension fee under 37 CFR 1.17(a) is calculated from: (1) the expiration date of the shortened statutory period for reply originally set in the final Office action; or (2) as set forth in (b) above, if checked. Any reply received by the Office later than three months after the mailing date of the final rejection, even if timely filed, may reduce any earned patent term adjustment. See 37 CFR 1.704(b).

NOTICE OF APPEAL

2. The Notice of Appeal was filed on ___. A brief in compliance with 37 CFR 41.37 must be filed within two months of the date of filing the Notice of Appeal (37 CFR 41.37(a)), or any extension thereof (37 CFR 41.37(e)), to avoid dismissal of the appeal. Since a Notice of Appeal has been filed, any reply must be filed within the time period set forth in 37 CFR 41.37(a).

AMENDMENTS

3. The proposed amendment(s) filed after a final rejection, but prior to the date of filing a brief, will not be entered because
   (a) They raise new issues that would require further consideration and/or search (see NOTE below);
   (b) They raise the issue of new matter (see NOTE below);
   (c) They are not deemed to place the application in better form for appeal by materially reducing or simplifying the issues for appeal; and/or
   (d) They present additional claims without canceling a corresponding number of finally rejected claims.
   NOTE: ___. (See 37 CFR 1.116 and 41.33(a)).
4. The amendments are not in compliance with 37 CFR 1.121. See attached Notice of Non-Compliant Amendment (PTOL-324).
5. Applicant's reply has overcome the following rejection(s): ___.
6. Newly proposed or amended claim(s) ___ would be allowable if submitted in a separate, timely filed amendment canceling the non-allowable claim(s).
7. For purposes of appeal, the proposed amendment(s): a) will not be entered, or b) will be entered and an explanation of how the new or amended claims would be rejected is provided below or appended.
   The status of the claim(s) is (or will be) as follows:
   Claim(s) allowed: ___.
   Claim(s) objected to: ___.
   Claim(s) rejected: *1-10*.
   Claim(s) withdrawn from consideration: ___.

AFFIDAVIT OR OTHER EVIDENCE

8. The affidavit or other evidence filed after a final action, but before or on the date of filing a Notice of Appeal will not be entered because applicant failed to provide a showing of good and sufficient reasons why the affidavit or other evidence is necessary and was not earlier presented. See 37 CFR 1.116(e).
9. The affidavit or other evidence filed after the date of filing a Notice of Appeal, but prior to the date of filing a brief, will not be entered because the affidavit or other evidence failed to overcome all rejections under appeal and/or appellant fails to provide a showing a good and sufficient reasons why it is necessary and was not earlier presented. See 37 CFR 41.33(d)(1).
10. The affidavit or other evidence is entered. An explanation of the status of the claims after entry is below or attached.

REQUEST FOR RECONSIDERATION/OTHER

11. The request for reconsideration has been considered but does NOT place the application in condition for allowance because: See Continuation Sheet.
12. Note the attached Information *Disclosure Statement*(s). (PTO/SB/08) Paper No(s). ___
13. Other: ___.

/Samuel P Siefke/
Primary Examiner, Art Unit 1797

Continuation of 11. does NOT place the application in condition for allowance because: Spinning of the resist does not form a gel, unless the gel is originally present in the resist. Therefore, the gel should be present from the beginning in order to perform the method recited in claim 1. The Examiner submits that gels are formed in a resist when the resists are being formed, i.e. from an excessive increase of the concentration of ammonia water which invites gel formation in the resist as a result of the reaction between the components forming the resist and ammonia in the ammonia water (US 5,578,186). It should be noted that such a gel formation provides a harmful effect upon the photosensitivity of the resist. Applicant states, "The Examiner's argument ignores the fact that a gel is formed as a result of the change in state of the gel contaminants. Claim 1 assumes a contaminant is presnt, what if a contaminant is not present? A gel would not be formed from spinning because the a disperse phase has not combined with a continuous phase and produced this semisolid gel material as the Applicant states. If a gel was not created, then the gel cannot be located under a light condition.

UNITED STATES PATENT AND TRADEMARK OFFICE

Commissioner for Patents
United States Patent and Trademark Office
P.O. Box 1450
Alexandria, VA 22313-1450
www.uspto.gov

BLAKELY SOKOLOFF TAYLOR & ZAFMAN LLP
1279 OAKMEAD PARKWAY
SUNNYVALE, CA 94085-4040

COPY MAILED

AUG 05 2008

In re Application of	:	
Hok-Kin Choi, et al.	:	
Application No. 10/611,029	:	ON PETITION
Filed: June 30, 2003	:	
Attorney Docket No. 42P16678	:	

This is a decision on the renewed petition under 37 CFR 1.137(b), filed June 26, 2008, to revive the above-identified application.

The petition is **GRANTED**.

A review of the record discloses that this application became abandoned for failure to timely reply within the meaning of 37 CFR 1.113 to the final Office action, mailed November 6, 2006. A Notice of Abandonment was mailed on May 15, 2007. On September 10, 2007 a petition to revive under 37 CFR 1.137(b) was filed; however, the petition was dismissed in a decision mailed May 14, 2008. In response, on June 26, 2008, the present petition was filed.

The petition is found to comply with the requirements of 37 CFR 1.137(b). The application is being revived for consideration of a submission under 37 CFR 1.114 (request for continued examination).

The file does not indicate a change of address has been submitted, although the address given on the petition differs from the address of record. If appropriate, a change of address should be filed in accordance with MPEP 601.03. A courtesy copy of this decision is being mailed to the address given on the petition; however, the Office will mail all future correspondence solely to the address of record.

This application is being referred to Technology Center AU 1797 for processing of the RCE filed June 26, 2008 and for appropriate action by the Examiner in the normal course of business on the amendment submitted in accordance with 37 CFR 1.114.

Telephone inquiries concerning this decision should be directed to the undersigned at (571) 272-3204. Inquiries relating to further prosecution should be directed to the Technology Center.

Sherry D. Brinkley
Petitions Examiner
Office of Petitions

cc: THINH V. NGUYEN
BLAKELY SOKOLOFF TAYLOR & ZAFMAN LLP
3200 PARK CENTER DRIVE, SUITE 700
COSTA MESA, CA 92626

UNITED STATES PATENT AND TRADEMARK OFFICE

Commissioner for Patents
United States Patent and Trademark Office
P.O. Box 1450
Alexandria, VA 22313-1450
www.uspto.gov

BACHMAN & LAPOINTE, P.C.
900 CHAPEL STREET
SUITE 1201
NEW HAVEN CT 06510

COPY MAILED

DEC 2 6 2007

OFFICE OF PETITIONS

In re Application of Bruce L. Harrison Application No. 10/611,036 Filed: June 30, 2003 Attorney Docket No. PA-085.10837-US(03-111)	: : : : :	DECISION DISMISSING PETITION UNDER 37 CFR 1.313(a)

This is a decision on the petition under 37 CFR 1.313(a), filed December 19, 2007, requesting withdrawal of the above-identified application from issue.

The petition is **DISMISSED** as moot for the reasons stated below.

A review of the file record discloses that a Notice of Allowance and Fee(s) Due was mailed on October 5, 2007, with the issue fee being due on or before January 7, 2008. The issue fee in this case has not been paid.

The filing of a petition under 37 CFR 1.313(a) is unnecessary, since the mere filing of an RCE and submission will effectively withdraw an application from issue prior to payment of the issue fee. In view thereof, the petition to withdraw from issue is dismissed as involving a moot issue. *Note* MPEP §§ 706.07(h)(IX) and 1308.

Telephone inquiries concerning this decision may be directed to April Wise at (571) 272-1642.

The matter is being referred to Technology Center AU 2174 for appropriate processing of the RCE filed December 19, 2007, and for consideration of the concurrently filed information disclosure statement.

Frances Hicks

Frances M. Hicks
Petitions Examiner
Office of Petitions

UNITED STATES PATENT AND TRADEMARK OFFICE

COMMISSIONER FOR PATENTS
UNITED STATES PATENT AND TRADEMARK OFFICE
P.O. BOX 1450
ALEXANDRIA, VA 22313-1450
www.uspto.gov

JOSEPH C. WANG
EXXONMOBIL RESEARCH AND ENGINEERING COMPANY
P. O. BOX 900
ANNANDALE, NJ 08801-0900

COPY MAILED

MAY 1 1 2004

OFFICE OF PETITIONS

In re Application of
John S. Buchanan, et al. :
Application No. 10/611,039 : ON PETITION
Filed: July 1, 2003 :
Attorney Docket No. JCW-0305 :

This is a decision on the petition under 37 CFR(c)(2) to withdraw the above-identified application from issue after payment of the issue fee, filed May 5, 2004.

The petition is **GRANTED**.

The above-identified application is withdrawn from issue for consideration of a submission under 37 CFR 1.114 (request for continued examination). See 37 CFR 1.313(c)(2).

Petitioner is advised that the issue fee paid, January 13, 2004, in the above-identified application cannot be refunded. If, however, the above-identified application is again allowed, petitioner may request that it be applied towards the issue fee required by the new Notice of Allowance. [1]

Telephone inquiries relating to this decision should be directed to the undersigned at (703) 305-9220.

The application is being forwarded to Technology Center 1724 for further processing of the request for continued examination under 37 CFR 1.114.

Sherry D. Brinkley
Petitions Examiner
Office of Petitions
Office of the Deputy Commissioner
for Patent Examination Policy

[1]The request to apply the issue fee to the new Notice may be satisfied by completing and returning the new Issue Fee Transmittal Form PTOL-85(b), which includes the following language thereon: "Commissioner for Patents is requested to apply the Issue Fee and Publication Fee (if any) or re-apply any previously paid issue fee to the application identified above." Petitioner is advised that, whether a fee is indicated as being due or not, the Issue Fee Transmittal Form **must** be completed and timely submitted to avoid abandonment. Note the language in bold text on the first page of the Notice of Allowance and Fee(s) Due (PTOL-85).

SPE RESPONSE FOR CERTIFICATE OF CORRECTION

Paper No.: _____

DATE : 09/20/07

TO SPE OF : ART UNIT 2823

SUBJECT : Request for Certificate of Correction for Appl. No.: **10/611042** Patent No.: **7122392**

Please respond to this request for a certificate of correction within 7 days.

Please review the requested changes/corrections as shown in the **COCIN** document(s) in the IFW application image. No new matter should be introduced, nor should the scope or meaning of the claims be changed.

Please complete the response (see below) and forward the completed response to scanning using document code **COCX**.

A. Green

Angela Green
Certificates of Correction Branch
703.308.9380 ext. 123

Thank You For Your Assistance

The request for issuing the above-identified correction(s) is hereby:
Note your decision on the appropriate box.

- ☐ **Approved** — All changes apply.
- ☐ **Approved in Part** — Specify below which changes **do not** apply.
- ☒ **Denied** — State the reasons for denial below.

Comments: The COCIN does not consider the examiner amendments of 5/22/06 or 12/30/05. There is some question on the amendments as to the "propose" examiner amdts

[signature]
SPE

2823
Art Unit

UNITED STATES PATENT AND TRADEMARK OFFICE

Commissioner for Patents
United States Patent and Trademark Office
P.O. Box 1450
Alexandria, VA 22313-1450
www.uspto.gov

Date Mailed : October 3, 2007

Patent No. :7,122,392
Inventor :Morse
Patent Issued :October 17, 2006
Title :METHODS OF FORMING A HIGH CERMANIUM CONCENTRATION SILICON :GERMANIUM ALLOY BY EPITAXIAL LATERAL OVERGROWTH AND STRUCTURES :FORMED THEREBY

Re: Request for Certificate of Correction

Consideration has been given your request for the issuance of a certificate of correction for the above-identified patent under the provisions of Rule(s) 1.322.

Inspection of the application for the patent reveals that in connection with the alleged error pertaining to applicants request for correction involving deletion of claim 1-7; the requested changes/corrections do not consider the examiner amendments of 5/22/06 or 12/30/05. There is some question on the amendments as to the "proposed" examiner amendments.

In view of the foregoing applicants request in this matter is hereby denied.

Any telephone inquiry concerning this communication should be directed to Ms. A. Green at (703) 308-9380 ext. 123.

Cecelia Newman
Decisions & Certificates
of Correction Branch
(703) 308-9390 or (703) 308- 9380 ext. 123

Blakely, Sokoloff, Taylor & Zafman
12400 Wilshire Blvd. 7th Fl
Los Angels, CA 90025-1026

CBN/arg

UNITED STATES PATENT AND TRADEMARK OFFICE

Commissioner for Patents
United States Patent and Trademark Office
P.O. Box 1450
Alexandria, VA 22313-1450
www.uspto.gov

Paper No.

COPY MAILED

OCT 2 0 2004

OFFICE OF PETITIONS

BLAKELY SOKOLOFF TAYLOR & ZAFMAN
12400 WILSHIRE BOULEVARD
SEVENTH FLOOR
LOS ANGELES, CA 90025-1030

In re Application of :
Lurie et al. :
Application No. 10/611,050 : DECISION ON PETITION
Filed: July 1, 2003 :
Attorney Docket No. 004704P011C :

This is in response to the paper styled "EVIDENCE OF DEPOSIT OF ITEM(S) WITH APPLICATION INDICATED AS OMITTED IN THE 'NOTICE OF OMITTED ITEMS'" filed September 21, 2004. This paper is properly treated as a petition under 37 C.F.R. § 1.53(e)(2). Petitioners request that the Office accord the above-identified application a filing date of July 1, 2003, with figures 5-11 as a part of the original application disclosure.

Application papers in the above-identified application were filed on July 1, 2003. However, on September 2, 2004, the Initial Patent Examination Division mailed applicants a "Notice of Omitted Item(s) in a Nonprovisional Application." Applicants were thereby notified that the application papers had been accorded a filing date; however, figures 5-11 described in the specification appeared to have been omitted.

In response, applicants timely filed the instant petition (and petition fee). On petition, applicants submit evidence to show that the items indicated as omitted were in fact deposited with the PTO on July 1, 2003, the original date on which the papers for this application were deposited. This evidence includes a copy of their return postcard from the USPTO. Petitioners also submitted a copy of figures 5-11 as originally filed.

A postcard receipt which itemizes and properly identifies the items which are being filed serves as *prima facie* evidence of receipt in the Office of all items listed thereon on the date stamped thereon by the Office. See MPEP 503. A review of petitioners' postcard receipt reveals that: 1) it was date stamped as received in the USPTO on July 1, 2003, and the items filed therewith were assigned Application No. 10/611050; 2) it specifically identifies the items being filed, including "☒ Drawings: 14 # of sheets includes 14 figures" and 3) it lacks any annotation of nonreceipt of any item denoted on the postcard. Thus, petitioners have shown that the items denoted, including the 14 Sheets of Drawings, were filed on July 1, 2003.

The sheets of drawings already considered received in the Office on July 1, 2003, were reviewed along with figures 5-11 supplied on petition. These papers together constitute the item described on the postcard receipt as "☒ Drawings: 14 # of sheets includes 14 figures." It is concluded that petitioners have shown that figures 5-11 were among the items present in the application on the date of deposit and should be included in the original application disclosure.

Accordingly, the petition is **GRANTED**.

Given the basis for granting the petition, petitioner's request to refund the petition fee is granted. The fee will be credited to Deposit Account No. 02-2666.

The application is being forwarded to the Office of Initial Patent Examination (OIPE) for:

- further **correction of the filing date to July 1, 2003** (not September 21, 2004) using the application papers received in the Office on that date; and figures 5-11 resubmitted on petition filed September 21, 2004; and
- for indication in Office records that 14 sheets of drawings (figs 1, 2A, 2B, 3-13) were present in the application on filing.

Applicants will receive appropriate notifications regarding the fees owed, if any, and other information in due course from OIPE.

Telephone inquiries related to this decision should be directed to the undersigned at 571-272-3219.

Nancy Johnson
Senior Petitions Attorney
Office of Petitions

UNITED STATES PATENT AND TRADEMARK OFFICE

Commissioner for Patents
United States Patent and Trademark Office
P.O. Box 1450
Alexandria, VA 22313-1450
www.uspto.gov

Wayne DeMello
Nokia Inc.
6000 Connection Drive
Irving TX 75039

COPY MAILED

SEP 29 2008

OFFICE OF PETITIONS

In re Application of
Chaskar, et al.
Application No. 10/611,053
Filed: June 30, 2003
Attorney Docket No. NC34967

DECISION ON PETITION

This is a decision on the petition under the unintentional provisions of 37 CFR 1.137(b), filed September 17, 2008, to revive the above-identified application.

The petition is **GRANTED**.

The application became abandoned February 29, 2008 for failure to timely submit a proper reply to the restriction requirement mailed January 28, 2008. The restriction requirement set a one month shortened statutory period of time for reply. No petition for extension of time was timely requested. This decision precedes Notice of Abandonment.

The petition satisfies the requirements of 37 CFR 1.137(b) in that petitioner has supplied (1) the required reply, (2) the required petition fee, and (3) a proper statement of unintentional delay.

There is no indication that the person signing the petition has been properly empowered to represent assignee. While a power of attorney/change of correspondence address accompanied the instant petition, the request has not been entered into the record as the individual signing does not establish that he is authorized to act on behalf of assignee in accordance with 37 CFR 3.71 and 3.73(b). Thus, if the person signing the petition desires to receive future correspondence regarding this application, the appropriate power of attorney documents must be submitted. While a courtesy copy of this decision is being mailed to the person signing the petition, all future correspondence will be directed to the address currently of record until appropriate instructions are received.

Telephone inquiries concerning this decision should be directed to the undersigned at (571) 272-3205.

This application is being referred to Technology Center AU 2617 for appropriate action by the Examiner in the normal course of business on the reply received September 17, 2008.

Alesia M. Brown
Petitions Attorney
Office of Petitions

CC: CHAD THORSON
Alston & Bird LLP
Bank of America Plaza
101 South Tryon Street, Suite 4000
Charlotte, NC 28280--400

UNITED STATES PATENT AND TRADEMARK OFFICE

Commissioner for Patents
United States Patent and Trademark Office
P.O. Box 1450
Alexandria, VA 22313-1450
www.uspto.gov

LERNER GREENBERG STEMER LLP
P. O. BOX 2480
HOLLYWOOD, FL 33020

COPY MAILED

JUN 01 2007

OFFICE OF PETITIONS

In re Patent No. 7,117,233
Issue Date: October 3, 2006
Application No. 10/611,065
Filed: July 1, 2003
Attorney Docket No. S&ZIO020102

: DECISION GRANTING PETITION
: UNDER 37 CFR 1.78(a)(3) AND
: REQUEST FOR CERTIFICATE OF
: CORRECTION
:

This is a decision on the petition, filed December 13, 2006, which is being treated as a petition under 37 CFR 1.78(a)(3), seeking to add a claim for priority under 35 U.S.C. §§ 120 and 365(c) to international Application No. PCT/EP02/00732, filed January 24, 2002, by way of a certificate of correction.

The petition is **granted**.

A review of the file record fails to disclose that a claim for the benefit of priority to the above-noted, prior-filed PCT application was made within the time period set forth in 37 CFR 1.78(a)(2)(ii) and further failed to include a proper reference to the prior-filed application as required by 37 CFR 1.78(a)(2)(i) and 1.78(a)(2)(iii).

The instant application was filed July 1, 2003. Therefore, since this application was filed after November 29, 2000, a petition under 37 CFR 1.78(a)(3), along with submission of a Certificate of Correction, is the appropriate avenue of relief to accept a late claim for the benefit of priority to a prior-filed application after issuance of the application into a patent. *See* MPEP 1481.

A petition for acceptance of a claim for late priority under 37 CFR 1.78(a)(3) must be accompanied by:

(1) the reference required by 35 U.S.C. § 120 and 37 CFR 1.78(a)(2)(i) and (iii) of the prior-filed application, unless previously submitted;
(2) the surcharge set forth in § 1.17(t); and
(3) a statement that the entire delay between the date the claim was due under 37 CFR 1.78(a)(2)(ii) and the date the claim was filed was unintentional. The Director may require additional information where there is a question whether the delay was unintentional.

As the petition for acceptance of an unintentionally delayed claim for the benefit of priority under 35 U.S.C. §§ 120 and 365(c) to the above-noted, prior-filed PCT application satisfies the conditions of 37 CFR 1.78(a)(3), the petition is granted.

A corrected Filing Receipt, which includes the priority claim to the above-noted, prior-filed PCT application, accompanies this decision on petition.

Petitioner is advised that the granting of this petition and the mailing of a corrected Filing Receipt should not be viewed as an indication that a determination has been made that this application is entitled to claim benefit of the prior-filed application. **A determination that applicant is entitled to claim benefit of the prior-filed application will be made by the Examiner prior to the mailing of a certificate of correction.**

Any inquiries concerning this decision may be directed to the undersigned at (571) 272-3218.

This application is being referred to the Certificates of Correction Branch for processing the request for a certificate of correction in accordance with this decision on the petition under 37 CFR 1.78(a)(3).

Frances Hicks
Petitions Examiner
Office of Petitions

ATTACHMENT: Corrected Filing Receipt

UNITED STATES PATENT AND TRADEMARK OFFICE

UNITED STATES DEPARTMENT OF COMMERCE
United States Patent and Trademark Office
Address: COMMISSIONER FOR PATENTS
P.O. Box 1450
Alexandria, Virginia 22313-1450
www.uspto.gov

APPL NO.	FILING OR 371(c) DATE	ART UNIT	FIL FEE REC'D	ATTY.DOCKET NO	TOT CLMS	IND CLMS
10/611,065	07/01/2003	2193	1180	S&ZIO020102	12	3

CONFIRMATION NO. 5718

CORRECTED FILING RECEIPT

OC000000024166248

24131
LERNER GREENBERG STEMER LLP
P O BOX 2480
HOLLYWOOD, FL 33022-2480

Date Mailed: 05/31/2007

Receipt is acknowledged of this regular Patent Application. It will be considered in its order and you will be notified as to the results of the examination. Be sure to provide the U.S. APPLICATION NUMBER, FILING DATE, NAME OF APPLICANT, and TITLE OF INVENTION when inquiring about this application. Fees transmitted by check or draft are subject to collection. Please verify the accuracy of the data presented on this receipt. **If an error is noted on this Filing Receipt, please mail to the Commissioner for Patents P.O. Box 1450 Alexandria Va 22313-1450. Please provide a copy of this Filing Receipt with the changes noted thereon. If you received a "Notice to File Missing Parts" for this application, please submit any corrections to this Filing Receipt with your reply to the Notice. When the USPTO processes the reply to the Notice, the USPTO will generate another Filing Receipt incorporating the requested corrections (if appropriate).**

Applicant(s)

Markus Dichtl, Munchen, GERMANY;

Power of Attorney:

Laurence Greenberg--29308
Werner Stemer--34956
Gregory Mayback--40719
Ralph Locher--41947

Domestic Priority data as claimed by applicant

This application is a CON of PCT/EP02/00732 01/24/2002

Foreign Applications

GERMANY 101 03 071.1 01/24/2001

If Required, Foreign Filing License Granted: 10/07/2003

The country code and number of your priority application, to be used for filing abroad under the Paris Convention, is US10/611,065

Projected Publication Date: Not Applicable

Non-Publication Request: No

Early Publication Request: No

Title

RANDOM NUMBER GENERATOR AND METHOD FOR GENERATING A RANDOM NUMBER

Preliminary Class

708

PROTECTING YOUR INVENTION OUTSIDE THE UNITED STATES

Since the rights granted by a U.S. patent extend only throughout the territory of the United States and have no effect in a foreign country, an inventor who wishes patent protection in another country must apply for a patent in a specific country or in regional patent offices. Applicants may wish to consider the filing of an international application under the Patent Cooperation Treaty (PCT). An international (PCT) application generally has the same effect as a regular national patent application in each PCT-member country. The PCT process **simplifies** the filing of patent applications on the same invention in member countries, but **does not result** in a grant of "an international patent" and does not eliminate the need of applicants to file additional documents and fees in countries where patent protection is desired.

Almost every country has its own patent law, and a person desiring a patent in a particular country must make an application for patent in that country in accordance with its particular laws. Since the laws of many countries differ in various respects from the patent law of the United States, applicants are advised to seek guidance from specific foreign countries to ensure that patent rights are not lost prematurely.

Applicants also are advised that in the case of inventions made in the United States, the Director of the USPTO must issue a license before applicants can apply for a patent in a foreign country. The filing of a U.S. patent application serves as a request for a foreign filing license. The application's filing receipt contains further information and guidance as to the status of applicant's license for foreign filing.

Applicants may wish to consult the USPTO booklet, "General Information Concerning Patents" (specifically, the section entitled "Treaties and Foreign Patents") for more information on timeframes and deadlines for filing foreign patent applications. The guide is available either by contacting the USPTO Contact Center at 800-786-9199, or it can be viewed on the USPTO website at http://www.uspto.gov/web/offices/pac/doc/general/index.html.

For information on preventing theft of your intellectual property (patents, trademarks and copyrights), you may wish to consult the U.S. Government website, http://www.stopfakes.gov. Part of a Department of Commerce initiative, this website includes self-help "toolkits" giving innovators guidance on how to protect intellectual property in specific countries such as China, Korea and Mexico. For questions regarding patent enforcement issues, applicants may call the U.S. Government hotline at 1-866-999-HALT (1-866-999-4158).

LICENSE FOR FOREIGN FILING UNDER
Title 35, United States Code, Section 184
Title 37, Code of Federal Regulations, 5.11 & 5.15

GRANTED

The applicant has been granted a license under 35 U.S.C. 184, if the phrase "IF REQUIRED, FOREIGN FILING LICENSE GRANTED" followed by a date appears on this form. Such licenses are issued in all applications where the conditions for issuance of a license have been met, regardless of whether or not a license may be required as set forth in 37 CFR 5.15. The scope and limitations of this license are set forth in 37 CFR 5.15(a) unless an earlier license has been issued under 37 CFR 5.15(b). The license is subject to revocation upon written notification. The date indicated is the effective date of the license, unless an earlier license of similar scope has been granted

under 37 CFR 5.13 or 5.14.

This license is to be retained by the licensee and may be used at any time on or after the effective date thereof unless it is revoked. This license is automatically transferred to any related applications(s) filed under 37 CFR 1.53(d). This license is not retroactive.

The grant of a license does not in any way lessen the responsibility of a licensee for the security of the subject matter as imposed by any Government contract or the provisions of existing laws relating to espionage and the national security or the export of technical data. Licensees should apprise themselves of current regulations especially with respect to certain countries, of other agencies, particularly the Office of Defense Trade Controls, Department of State (with respect to Arms, Munitions and Implements of War (22 CFR 121-128)); the Bureau of Industry and Security, Department of Commerce (15 CFR parts 730-774); the Office of Foreign Assets Control, Department of Treasury (31 CFR Parts 500+) and the Department of Energy.

NOT GRANTED

No license under 35 U.S.C. 184 has been granted at this time, if the phrase "IF REQUIRED, FOREIGN FILING LICENSE GRANTED" DOES NOT appear on this form. Applicant may still petition for a license under 37 CFR 5.12, if a license is desired before the expiration of 6 months from the filing date of the application. If 6 months has lapsed from the filing date of this application and the licensee has not received any indication of a secrecy order under 35 U.S.C. 181, the licensee may foreign file the application pursuant to 37 CFR 5.15(b).

UNITED STATES PATENT AND TRADEMARK OFFICE

Commissioner for Patents
United States Patent and Trademark Office
P.O. Box 1450
Alexandria, VA 22313-1450
www.uspto.gov

INTEL/BSTZ
BLAKELY SOKOLOFF TAYLOR & ZAFMAN LLP
1279 OAKMEAD PARKWAY
SUNNYVALE CA 94085-4040

MAILED

FEB 26 2010

OFFICE OF PETITIONS

In re Application of	:	
Alexander Tregub et al.	:	
Application No. 10/611,070	:	DECISION ON PETITION
Filed: June 30, 2003	:	
Attorney Docket No. **42P16671**	:	

This is a decision on the petition under the unintentional provisions of 37 CFR 1.137(b), filed December 4, 2009, to revive the above-identified application.

The petition is **GRANTED**.

The application became abandoned for failure to reply in a timely manner to the non-final Office action mailed March 4, 2009, which set a shortened statutory period for reply of three (3) months. No extensions of time under the provisions of 37 CFR 1.136(a) were obtained. Accordingly, the application became abandoned on June 5, 2009.

The petition satisfies the requirements of 37 CFR 1.137(b) in that petitioner has supplied (1) the reply in the form of an amendment, (2) the petition fee of $1,620, and (3) a proper statement of unintentional delay.

Telephone inquiries concerning this decision should be directed to JoAnne Burke at (571) 272-4584.

This application is being referred to Technology Center AU 1795 for appropriate action by the Examiner in the normal course of business.

JoAnne Burke
Petitions Examiner
Office of Petitions

UNITED STATES PATENT AND TRADEMARK OFFICE

Commissioner for Patents
United States Patent and Trademark Office
P.O. Box 1450
Alexandria, VA 22313-1450
www.uspto.gov

JUN 20 2006

CARELLA, BYRNE, BAIN, GILFILLAN,
CECCHI, STEWART & OLSTEIN
6 BECKER FARM ROAD
ROSELAND NJ 07068

In re Application of	:
Edward M. Rudnic et al	:
Serial No.: 10/611,076	: PETITION DECISION
Filed: July 1, 2003	:
Attorney Docket No.: 206200-84	:

This is in response to the petition under 37 CFR 1.181, filed April 07, 2006, requesting withdrawal of the Final rejection.

BACKGROUND

A review of the file history shows that the examiner mailed a Non-Final Rejection to applicants on August 09, 2004, setting forth the following rejections:

Claims 1-12 under 35 U.S.C. 103(a) as unpatentable over Mehta et al (4794001) in view of WO 98/22091;
Claims 1-12 under Obvious Double Patenting over US 6544555;
Claims 1-2, 4-8,10-12 under Obvious Double patenting over US 6623757;
Claims 1-12 under Obvious Double Patenting over US 6565882;
Claims 35-66 under Obvious Double Patenting over US 6723341, 6610328, 6638532, 6632453, 6627222, 6565882, 6623757, 6544555, 6663891, 6723341, 6667042, 6663890, 6730320, 6667057 and 6669948; and
Claims 1-12 under provisional Obvious Double patenting over co-pending 10/440675, 10/419,357, 10/325,780 and 10/211,039.

Applicants filed a response to the above Non-Final Rejection on February 14, 2005, by amending claim 1, and adding new claims 13-26.

The examiner mailed a Final rejection to applicants on June 09, 2005, setting forth the following rejections:

Claims 1-26 under 35 U.S.C. 103(a) as unpatentable over Mehta et al (4794001) in view of WO 98/22091;
Claims 14-25 under 35 U.S.C. 103(a) as unpatentable over Mehta et al in view of WO 98/22091 and further in view of Chen(5508040);

Claims 1-26 under Obvious Double Patenting over US 6544555;
Claims 1-2, 4-8, 10-15 and 17-26 under Obvious Double Patenting over US 6623757;
Claims 1-26 under Obvious Double Patenting over US 65656882;
Claims 1-26 under Obvious Double patenting over US 6723341, US 6610328, US 6638532, US 6632453, US 6627222, US 6565882, US 6623757, US 6544555, US 6663891, US 6723341, US 6667042, US 6663890, US 6730320, US 6667057, and US 6669948;
Claims 1-26 under provisional Obvious Double Patenting over SN 10/440675, 10/419357, 10/325780, 10/211039; and replied to each of applicants' arguments and the affidavit submitted under 37 CFR 1.132.

In response applicants filed RCE papers on December 13, 2005, presenting 35 pages of argument and rebuttal of the examiner's rejections and including 50 pages of supporting exhibits.

The examiner then mailed a new Final Office action to applicants on March 06, 2006, again rejecting
Claims 1-26 under 35 U.S.C. 103(a) as obvious over Mehta et al (4794,001) in view of WO 98/22091;
Claims 14-25 under 35 U.S.C. 103(a) as unpatentable over Mehta et al (4794,001) in view of WO 98/22091 further in view of Chen (5508,040);
Claims 1-26 under Obvious Double Patenting over US 6544555;
Claims 1,2, 4-8,10-15, 17-26 under Obvious Double Patenting over US 6623,757;
Claims 1-26 Under Obvious Double patenting over 6565882;
Claims 1-26 under Obvious Double patenting over US 6723341, 6610328, 6638532, 6632453, 6627222, 6663891, 6667042, 6663890, 6730320, 6667057, 6669948 and 6991807; and
Claims 1-26 under Provisional Obvious Double patenting over 10/419357.

On or about March 28, 2006, the Examiner sent out an authorization miscellaneous letter, in response to several e-mails by the attorney, requesting the e-mail be made a part of the record. In response to that, the applicants filed this Petition, on April 07, 2006, seeking withdrawal of the Final Office action and a request to for the application be reviewed by the SPRE.

DISCUSSION

Applicants argue the Examiners decision to invoke the First Action Final Rejection (FAFR) practice [citing MPEP §706.07(b)] was improper and the finality of the action should be withdrawn.

Applicants have argued a line by line comparison and found differences between the respective grounds and art. Applicants state that the examiner has withdrawn US 4598045 along with her arguments based on Schering Corp.v. Geneva Pharm. Inc., 339 F. 3d 1373, 1377, 67 USPQ2d 1664, 1668 (Fed. Cir. 2003), but has added 4 pages of new arguments along with newly cited In re Keller, In re Merck & Co. In view of the fact that applicants have presented new arguments in their response filed 12/13/2005, it is proper for the examiner to respond to those arguments. Such response may include citation of court cases as part of the examiner's arguments.

Applicants also argue that the examiner withdrew the double patenting rejection over US 10/211,039 but added a new Obvious Double Patenting Rejection over US 6991807 and also reconstituted the arguments. However, the examiner merely changed a provisional rejection over US 10/211039 to a (non-provisional) Obvious Double Patenting rejection based on 10/211039 maturing into US 6991807. The examiner also withdrew the rejection over10/440,675. Thus the examiner has not made a new rejection since the provisional rejection was already of record in the action mailed on August 09, 2004. Hence the rejection was not a new ground of rejection.

All other examiner arguments are in response to applicants' arguments or perceived arguments, including the reference to M.P.E.P. 804. Applicants' line by line comparison of the last two Office actions to ascertain the differences therebetween is instructive in noting the differences, but does not show the examiner abused his/her discretion or took an arbitrary or capricious action in making the first action following submission of RCE papers a Final Office action.

In view of the above the Examiners decision to invoke the First Action Final Rejection (FAFR) practice [citing MPEP §706.07(b)] is proper.

DECISION

The petition is **DENIED.**

Applicants' remain under obligation to make a proper response to the Final Office action within the time period set therein or as may be extended under 37 CFR 1.136(a).

Should there be any questions about this decision please contact William R. Dixon, Jr., by letter addressed to Director, TC 1600, at the address listed above, or by telephone at 571-272-0519 or by facsimile sent to the general Office facsimile number 571-273-8300.

Bruce M. Kisliuk
Director, Technology Center 1600

UNITED STATES PATENT AND TRADEMARK OFFICE

COMMISSIONER FOR PATENTS
UNITED STATES PATENT AND TRADEMARK OFFICE
P.O. BOX 1450
ALEXANDRIA, VA 22313-1450
www.uspto.gov

MAR 18 2004

In re Application of
Barley A. Forsman *et al*
Application No. 10/611,088
Filed: June 30, 2003
Attorney Docket No. KRN

DECISION ON PETITION

This is a decision on the petition to make special filed on July 25, 2003. The $130.00 petition fee has been received.

The petition is granted.

The petition to make special is based upon the existence of an actual infringement. A review of the petition shows that all of the requirements established in MPEP § 708.02(II) for a petition on that grounds have been satisfied. Therefore, petitioner is entitled to have this application handled special in accordance with MPEP § 708.02, subsection styled "Handling of Petitions to Make Special".

Accordingly, the examiner will treat this application as special throughout its prosecution. Prior to the first action on the merits, the examiner will conduct a rigorous search for potentially interfering applications. The interference search will be brought up to date prior to each successive action.

The application is being forwarded to the Supervisory Patent Examiner of Patent Examining Art Unit 3727 who will forward the application to the examiner for action consistent with this Decision.

PETITION GRANTED.

Stephen Marcus, Special Program Examiner,
Patent Examining Groups 3710 and 3720

Kolisch Hartwell, P.C.
520 S.W. Yamhill Street
Suite 200
Portland, OR 97204

UNITED STATES PATENT AND TRADEMARK OFFICE

Commissioner for Patents
United States Patent and Trademark Office
P.O. Box 1450
Alexandria, VA 22313-1450
www.uspto.gov

INTELLECTUAL PROPERTY GROUP
BOSE MCKINNEY & EVANS LLP
2700 FIRST INDIANA PLAZA
135 NORTH PENNSYLVANIA STREET
INDIANAPOLIS, IN 46204

COPY MAILED

OCT 0 3 2005

OFFICE OF PETITIONS

In re Application of :
Joseph A. Kummer, et al. :
Application No. 10/611,094 : ON PETITION
Filed: July 1, 2003 :
Attorney Docket No. 8266-1086 :

This is a decision on the petition under 37 CFR 1.137(b), filed August 16, 2005, to revive the above-identified application.

The petition is **GRANTED.**

The above-identified application became abandoned for failure to reply in a timely manner to the non-final Office action mailed January 4, 2005, which set a shortened statutory period for reply of three (3) months. No extensions of time under the provisions of 37 CFR 1.136(a) were obtained. Accordingly, the application became abandoned on April 5, 2005.

The petition satisfies the requirement of 37 CFR 1.137 (b) in that petitioner has supplied (1) the reply in the form of an Amendment; (2) the petition fee of $1500; and (3) the required statement of unintentional delay have been received. Accordingly, the petition filed August 16, 2005 is accepted as having been unintentionally delayed.

Telephone inquiries concerning this decision should be directed to the undersigned at (571) 272-3229.

The application matter is being referred to Technology Center 3600, Art Unit 3673 for further processing.

Retta Williams

Retta Williams
Petitions Examiner
Office of Petitions

UNITED STATES PATENT AND TRADEMARK OFFICE

COMMISSIONER FOR PATENTS
UNITED STATES PATENT AND TRADEMARK OFFICE
P.O. BOX 1450
ALEXANDRIA, VA 22313-1450
WWW.USPTO.GOV

Paper No. None

BLAKELY SOKOLOFF TAYLOR & ZAFMAN
12400 WILSHIRE BOULEVARD
SEVENTH FLOOR
LOS ANGELES CA 90025-1030

COPY MAILED

NOV 1 8 2005

OFFICE OF PETITIONS

In re Application of
Charles G. Mejia et al.
Application No. 10/611,110
Filed: June 30, 2003
Attorney Docket Number: 42P16899
Title: THERMAL STANDOFF FOR CLOSE PROXIMITY THERMAL MANAGEMENT

DECISION ON PETITION
UNDER 37 C.F.R. §1.137(b)

This is a decision on the petition, pursuant to 37 C.F.R. §1.137(b)[1], to revive the above-identified application, filed on November 1, 2005.

The above-identified application became abandoned for failure to submit the issue and publication fees in a timely manner in reply to the Notice of Allowance and Issue Fee Due, mailed April 29, 2005, which set a shortened statutory period for reply of three (3) months. No extensions of time are permitted for transmitting issue fees or publication fees[2]. Accordingly, the above-identified application became abandoned on July 30, 2005. A Notice of Abandonment was mailed on October 12, 2005.

With the present petition, Petitioner has submitted the petition fee, the publication fee, the issue fee, and the proper statement of unintentional delay.

As such, the petition is **GRANTED**.

---

1 A grantable petition pursuant to 37 CFR 1.137(b) must be accompanied by:
(1) The reply required to the outstanding Office action or notice, unless previously filed;
(2) The petition fee as set forth in § 1.17(m);
(3) A statement that the entire delay in filing the required reply from the due date for the reply until the filing of a grantable petition pursuant to this paragraph was unintentional. The Commissioner may require additional information where there is a question whether the delay was unintentional, and;
(4) Any terminal disclaimer (and fee as set forth in § 1.20(d)) required pursuant to paragraph (d) of this section.

2 See MPEP §710.02(e).

Telephone inquiries regarding *this decision* should be directed to the undersigned at (571) 272-3225. All other inquiries concerning examination procedures or status of the application should be directed to the Office of Patent Publication - (703) 308-6789.

Paul Shanoski
Senior Attorney
Office of Petitions
United States Patent and Trademark Office

UNITED STATES PATENT AND TRADEMARK OFFICE

Commissioner for Patents
United States Patent and Trademark Office
P.O. Box 1450
Alexandria, VA 22313-1450
www.uspto.gov

GATEWAY, INC.
ATTN: SCOTT CHARLES RICHARDSON
610 GATEWAY DRIVE
MAIL DROP Y-04
NORTH SIOUX CITY SD 57049

COPY MAILED

MAR 1 1 2005

OFFICE OF PETITIONS

In re Application of

Erickson, et al.

Application No. 10/611,116

Filed: June 30, 2003

Attorney Docket No. P1951US00

DECISION ON PETITION

This is a decision on the petition under 37 CFR 1.137(b), filed February 7, 2005, to revive the above-identified application.

The petition is **GRANTED**.

The above-cited application became abandoned for failure to reply in a timely manner to the non-final Office action mailed May 5, 2004, which set a shortened statutory period for reply of three (3) months from its mailing date. No extensions of time were obtained within the allowable period. Accordingly, the application became abandoned on August 6, 2004.

The amendment and drawings filed February 7, 2005, are noted and made of record.

It is not apparent whether the person signing the statement of unintentional delay was in a position to have firsthand or direct knowledge of the facts and circumstances of the delay at issue. Nevertheless, such statement is being treated as having been made as the result of a reasonable inquiry into the facts and circumstances of such delay. See 37 CFR 10.18(b) and Changes to Patent Practice and Procedure; Final Rule Notice, 62 Fed. Reg. 53131, 53178 (October 10, 1997), 1203 Off. Gaz. Pat. Office 63, 103 (October 21, 1997). In the event that such an inquiry has not been made, petitioner must make such an inquiry. If such inquiry results in the discovery that it is not correct that the entire delay in filing the required reply from the due date for the reply until the filing of a grantable petition pursuant to 37 CFR 1.137(b) was unintentional, petitioner must notify the Office.

There is no indication that the person signing the instant petition was ever given a power of attorney or authorization of agent to prosecute the above-identified application. If the person signing the instant petition desires to receive future correspondence regarding this application, the appropriate power of attorney or authorization of agent must be submitted. While a courtesy copy of this decision is being mailed to the person signing the instant petition, all future correspondence will be directed to the address of currently of record until such time as appropriate instructions are received to the contrary.

The application is being forwarded to Technology Center 2800, GAU 2859 for further processing.

Telephone inquiries concerning this decision should be directed to the undersigned at (571) 272-3222.

Kenya A. McLaughlin

Kenya A. McLaughlin
Petitions Attorney
Office of Petitions

cc:
Richard C. Weinblatt
Wolf, Block, Schorr, and Solis-Cohen LLP
1650 Arch Street—22nd Floor
Philadelphia, PA 19103-2097

UNITED STATES PATENT AND TRADEMARK OFFICE

COMMISSIONER FOR PATENTS
UNITED STATES PATENT AND TRADEMARK OFFICE
P.O. BOX 1450
ALEXANDRIA, VA 22313-1450
www.uspto.gov

INGRASSIA FISHER & LORENZ, P.C. (IBM)
7010 E. COCHISE ROAD
SCOTTSDALE, AZ 85253

COPY MAILED
SEP 22 2008

In re Application of	:	
Eric John Bartlett, et al.	:	
Application No. 10/611,127	:	ON PETITION
Filed: July 1, 2003	:	
Attorney Docket No. GB920020087US1	:	

This is a decision in response to the petition under 37 CFR 1.137(b), filed May 15, 2008, to revive the above-identified application.

The petition is GRANTED.

This application became abandoned for failure to timely respond to a decision by the Board of Patent Appeals and Interferences mailed October 10, 2007. A Notice of Abandonment was mailed December 26, 2007. In response on May 15, 2008, the present petition was filed, along with a Request for Continued Examination (RCE) under 37 CFR 1.114.

The petition satisfies the requirements of 37 CFR 1.137(b) in that petitioner has supplied (1) the reply in the form of a Request for Continued Examination (RCE), including the fee of $810 and the submission required by 37 CFR 1.114; (2) the petition fee of $1,540; and (3) an adequate statement of unintentional delay.

This application is being referred to Technology Center AU 2188 for processing of the RCE and for appropriate action by the Examiner in the normal course of business on the amendment submitted in accordance with 37 CFR 1.114.

Telephone inquiries concerning this decision should be directed to the undersigned at (571) 272-3204. Inquiries relating to further prosecution should be directed to the Technology Center.

Sherry D. Brinkley
Petitions Examiner
Office of Petitions

UNITED STATES PATENT AND TRADEMARK OFFICE

COMMISSIONER FOR PATENTS
UNITED STATES PATENT AND TRADEMARK OFFICE
P.O. BOX 1450
ALEXANDRIA, VA 22313-1450
WWW.USPTO.GOV

Paper No. None

COPY MAILED

JUL 12 2005

OFFICE OF PETITIONS

BAKER & BOTTS
30 ROCKEFELLER PLAZA
NEW YORK NY 10112

In re Application of :
David Yogev et al. :
Application No. 10/611,161 : DECISION ON PETITION
Filed: June 30, 2003 :
Attorney Docket No.: AP33201-1070188.0127 :
Title: LASER-DRIVEN CLEANING USING REACTIVE GASES :

This is a decision on the petition filed June 10, 2005, requesting that the application, including page 10 of the specification, be accorded a filing date of June 30, 2003, as part of the original disclosure.

The application was deposited on June 30, 2003. However, on September 26, 2003, the Office of Initial Patent Examination (OIPE) mailed a "Notice to File Missing Parts of Nonprovisional Application (notice)," stating that the application had been accorded a filing date, and advising applicants that the application appeared to have been deposited without page 10 of the specification. The notice set a two-month period for response.

It is noted that the transmittal sheet of the present application indicates that it is a divisional of prior-application number 09/564,914, and that the entire specification of which is incorporated by reference.

Section 201.06(c) of the MPEP sets forth, in part:

an applicant may incorporate by reference the prior application by including, in the continuation or divisional application-as-filed, a statement that such

specifically enumerated prior application or applications are "hereby incorporated herein by reference." The statement may appear in the specification or in the application transmittal letter. The incorporation by reference statement can only be relied upon to permit the entering of a portion of the prior application into the continuation or divisional application when the portion of the prior application has been inadvertently omitted from the submitted application papers in the continuation or divisional application. The inclusion of this incorporation by reference of the prior application(s) will permit an applicant to amend the continuation or divisional application to include any subject matter in such prior application(s), without the need for a petition (emphasis added) provided the continuation or divisional application is entitled to a filing date notwithstanding the incorporation by reference.

As such, in response to the notice of September 26, 2003, Petitioner submitted an amendment on November 10, 2003 requesting the entry of a copy of page 10 of the specification.

Therefore, the application, including page 10 of the specification, was complete on filing and this page is entitled to a filing date of June 30, 2003 as part of the original disclosure.

Accordingly, the petition is **GRANTED**. The petition fee of $400 will be refunded to Petitioner's Deposit Account.

The Office of Patent Publication will be advised to process this application with a filing date of June 30, 2003, using the original application papers filed on that date, as well as Page 10 of the specification submitted with the present petition, and for indication in Office records that this page was present on filing.

Telephone inquiries regarding this decision should be directed to the undersigned at (571) 272-3225. All other inquiries should be directed to the Office of Patent Publications.

Paul Shanoski
Senior Attorney
Office of Petitions
United States Patent and Trademark Office

UNITED STATES PATENT AND TRADEMARK OFFICE

Commissioner for Patents
United States Patent and Trademark Office
P.O. Box 1450
Alexandria, VA 22313-1450
www.uspto.gov

INTEL/BSTZ
BLAKELY SOKOLOFF TAYLOR & ZAFMAN LLP
1279 OAKMEAD PARKWAY
SUNNYVALE CA 94085-4040

MAILED

JUN 24 2010

OFFICE OF PETITIONS

In re Application of	:	
Coke et al.	:	
Application No. 10/611,164	:	DECISION ON PETITION
Filed: June 30, 2003	:	
Attorney Docket No. 042390.P16356	:	

This is a decision on the petition under the unintentional provisions of 37 CFR 1.137(b), filed May 24, 2010, to revive the above-identified application.

The petition is **GRANTED**.

This application became abandoned as a result of petitioner's failure to file an appeal brief (and fee required by 37 CFR 41.20(b)(2))within the time period provided in 37 CFR 41.37(a)(1). No extensions of time were obtained. As an appeal brief (and appeal brief fee) was not filed within two (2) months of the Notice of Appeal filed October 7, 2009, the appeal was dismissed and the proceedings as to the rejected claims were terminated. See 37 CFR 1.197(b). As no claim was allowed, the application became abandoned on December 8, 2009. *See* MPEP 1215.04. A Notice of Abandonment was mailed April 13, 2010.

The petition satisfies the requirements of 37 CFR 1.137(b) in that petitioner has supplied (1) the reply in the form of a Request for Continued Examination (RCE) and fee of $810.00, and the submission required by 37 CFR 1.114; (2) the petition fee of $1,620.00; and (3) a proper statement of unintentional delay.

It is not apparent whether the statement of unintentional delay was signed by a person who would have been in a position of knowing that the **entire** delay in filing the required reply from the due date for the reply until the filing of a grantable petition pursuant to 37 CFR 1.137(b) was unintentional. Nevertheless, in accordance with 37 CFR 10.18, the statement is accepted as constituting a certification of unintentional delay. However, in the event that petitioner has no knowledge that the delay was unintentional, petitioner must make such an inquiry to ascertain that, in fact, the delay was unintentional. If petitioner discovers that the delay was intentional, petitioner must notify the Office.

Telephone inquiries concerning this decision should be directed to the undersigned at (571) 272-7751.

The file is now being forwarded to Technology Center AU 2111 for processing of the Request for Continued Examination under 37 CFR 1.114 filed with the instant petition.

Joan Olszewski
Petitions Examiner
Office of Petitions

UNITED STATES PATENT AND TRADEMARK OFFICE

Commissioner for Patents
United States Patent and Trademark Office
P.O. Box 1450
Alexandria, VA 22313-1450
www.uspto.gov

POWELL GOLDSTEIN LLP
ONE ATLANTIC CENTER FOURTEENTH FLOOR
1201 WEST PEACHTREE STREET NW
ATLANTA GA 30309-3488

COPY MAILED

MAY 12 2008

In re Application of

MCKEE, W. Ross Jr. et al.
Application No. 10/611,169
Filed: June 30, 2003
Attorney Docket No. **141398.00001**

DECISION ON PETITION TO WITHDRAW FROM RECORD

This is a decision on the Request to Withdraw as attorney or agent of record under 37 C.F.R. § 1.36(b), filed February 04, 2008.

The request is **NOT APPROVED**.

A grantable request to withdraw as attorney/agent of record must be signed by every attorney/agent seeking to withdraw or contain a clear indication that one attorney is signing on behalf of another/others. A request to withdraw will not be approved unless at least 30 (thirty) days would remain between the date of approval and the later of the expiration date of a time to file a response or the expiration date of the maximum time period which can be extended under 37 C.F.R. § 1.136(a).

The Office cannot approve the request at this time since the reasons provided do not meet any of the conditions under the mandatory or permissive categories enumerated in 37 CFR 10.40. Section 10.40 of Title 37 of the Code of Federal Regulation states, "[a] practitioner shall not withdraw from employment in a proceeding before the Office without permission from the Office[.]" More specifically, 37 CFR 10.40 states, "[i]f paragraph (b) of this section is not applicable, a practitioner may not request permission to withdraw in matter pending before the Office unless such request or such withdrawal is" for one the permissive reasons listed in 37 CFR 10.40(c). The reason set forth in the request, termination of representation, does not meet any of the conditions set forth in 37 CFR 10.40.

All future communications from the Office will continue to be directed to the above-listed address until otherwise notified by applicant.

Telephone inquiries concerning this decision should be directed to Tredelle Jackson at 571-272- 2783.

Tredelle D. Jackson
Petitions Examiner
Office of Petitions

cc: **ACCESS DATA TECHNOLOGIES, INC.**
W. ROSS MCKEE, JR.
9925 HAYNES BRIDGE ROAD
SUITE 108
ALPHARETTA, GA 30022

UNITED STATES PATENT AND TRADEMARK OFFICE

Commissioner for Patents
United States Patent and Trademark Office
P.O. Box 1450
Alexandria, VA 22313-1450
www.uspto.gov

5-18-06

caj

Mailed:

In re application of	:	
Brian Bidlingmeyer et al.	:	DECISION ON
Serial No. 10/611,171	:	PETITION
Filed: June 30, 2003	:	

For: METHODS AND SYSTEMS FOR SEPARATING CONSTITUENTS OF A HIGHLY AQUEOUS FLUID

This is a decision on the PETITION UNDER 37 CFR 1.181 FOR ENTRY OF A DECLARATION UNDER 37 CFR 1.131 AFTER FINAL REJECTION filed September 14, 2005.

On May 11, 2005, a final office action was mailed to Applicants in which a first Declaration under 37 CFR 1.131 was found insufficient to establish conception and reduction of practice of the claimed invention. Applicants responded to this office action with a second Declaration addressing this issue with an amendment after final which was filed on August 11, 2005. The examiner refused entry of the second Declaration as untimely filed in an advisory action mailed August 24, 2005.

On September 14, 2005, the instant petition under 37 CFR 1.181 was timely filed to request the entry of the Declaration under 37 CFR 1.131 of August 11, 2005.

Petitioner's position is that the second Declaration was filed in response to a new requirement made by the examiner in the final office action and was therefore timely filed.

DECISION

Section 715.09 of the MPEP states:

715.09 [R-3] Seasonable Presentation
Affidavits or declarations under 37 CFR 1.131 must be timely presented in order to be admitted. Affidavits and declarations submitted under 37 CFR 1.131 and other evidence traversing rejections are considered timely if submitted:
(A) prior to a final rejection;
(B) before appeal in an application not having a final rejection;
(C) after final rejection, but before or on the same date of filing an appeal, upon a showing of good and sufficient reasons why the affidavit or other evidence is necessary and was not earlier presented in compliance with 37 CFR 1.116(e); or
(D) after the prosecution is closed (e.g., after a final rejection, after appeal, or

after allowance) if applicant files the affidavit or other evidence with a request for continued examination (RCE) under 37 CFR 1.114 in a utility or plant application filed on or after June 8, 1995; or a continued prosecution application (CPA) under 37 CFR 1.53(d) in a design application.

In the final office action mailed May 11, 2005, all of the claims were rejected under 35 USC 102(a) or, in the alternative, 35 USC 103(a) over Przybyciel et al. The examiner's position was that the first Declaration under 37 CFR 1.131 was insufficient to establish conception and reduction of practice of the claimed invention because the Declaration appeared to be silent on the issue of the low density hydrophobic bonded phase stationary phase. Therefore, Przybyciel et al. was still a relevant prior art reference. Applicants filed a second Declaration on August 11, 2005, attempting to establish the density of the hydrophobic stationary phases employed in the information and data provided in the first Declaration to demonstrate that conception and reduction to practice of the invention was prior to October 2002. The examiner stated in the advisory action that the second Declaration would not be entered because applicant failed to provide a showing of good and sufficient reasons why the Declaration was necessary and was not presented earlier.

Petitioner argues that the second Declaration was necessary in order to respond to a requirement first made by the examiner in the final office action. As such, the Declaration was necessary and could not have been presented earlier. This argument is persuasive.

Because the second Declaration was necessary in order to respond to a requirement first made by the examiner in the final office action and could not have been presented earlier, the denial of entry by the examiner was improper. Accordingly, the petition for entry of the Declaration under 37 CFR 1.131 after the mailing of the final office action is **GRANTED.**

It is noted that an appeal brief has been filed in the instant application. The application is being forwarded to the examiner for consideration of the brief in a manner consistent with this decision.

JMStone

Jacqueline M. Stone, Director
Technology Center 1700
Chemical and Materials Engineering

AGILENT TECHNOLOGIES, INC.
LEGAL DEPARTMENT, DL 429
INTELLECTUAL PROPERTY ADMINSTRATION
P.O. BOX 7599
LOVELAND, COLORADO 80537-0599

UNITED STATES PATENT AND TRADEMARK OFFICE

Commissioner for Patents
United States Patent and Trademark Office
P.O. Box 1450
Alexandria, VA 22313-1450
www.uspto.gov

Bryan A. Santarelli
Graybeal Jackson Haley LLP
Suite 350
1550108th Avenue NE
Bellevue, WA 98004-5973

COPY MAILED

SEP 08 2006

OFFICE OF PETITIONS

In re Application of	:	
Richard M. Deeley et al.	:	
Application No. 10/611,182	:	DECISION ON PETITION
Filed: June 30, 2003	:	TO WITHDRAW
Attorney Docket No. 1552-2-13	:	FROM RECORD
	:	

This is a decision on the Request to Withdraw as attorney or agent of record under 37 C.F.R. § 1.36(b), filed December 5, 2005.

The request is **NOT APPROVED** as moot.

A review of the file record indicates that the power of attorney to the attorney(s) and/or agent(s) associated with Customer Number 000996 has been revoked by the assignee of the patent application on March 14, 2006. Accordingly, the request to withdraw under 37 C.F.R. § 1.36(b) is moot.

All future communications from the Office will continue to be directed to the below-listed address until otherwise notified by applicant.

Telephone inquires concerning this decision should be directed to Terri Williams at 571-272-2991.

David Bucci
Petitions Examiner
Office of Petitions

cc: Graciela Cowger
Marger Johnson & McCollom PC
210 SW Morrison Street, Suite 400
Portland, OR 97204

CERTIFICATE OF MAILING UNDER 37 C.F.R. § 1.8

I hereby certify that this correspondence is being deposited with the United States Postal Service with sufficient postage as First Class Mail in an envelope addressed to: Commissioner for Patents, P.O. Box 1450 Alexandria, VA 22313-1450 on January 16, 2004.

David G. Parkurst, Reg. No. 29,422

OIPE JC10
JAN 20 2004
PATENT & TRADEMARK OFFICE

IN THE UNITED STATES PATENT AND TRADEMARK OFFICE

In re application of:

RONALD A. BAX

Serial No. 10/611,218

Filed: July 1, 2003

For: AIRCRAFT APPLICABLE CURRENT IMBALANCE DETECTION AND CIRCUIT INTERRUPTER AND PACKAGING THEREOF

Prior Examiner: Stephen W. Jackson

Prior Group Art Unit: 2836

Client ID/Matter No. HYAIR:64959

Date: January 16, 2004

4/3/05

Petition is moot.
Patent issued on 9/7/04

TGD

PETITION TO MAKE SPECIAL BECAUSE OF ACTUAL INFRINGEMENT
(37 C.F.R. 1.102 and M.P.E.P. 708.02)

Commissioner for Patents
P.O. Box 1450
Alexandria, VA 22313-1450

Dear Sir:

Applicant hereby petitions to make this application special because of actual infringement as provided under M.P.E.P. 708.02 II.

A Declaration by David G. Parkhurst in support of this Petition is enclosed.

Also enclosed are copies of the following references which are deemed to be most closely related to the subject matter encompassed by the claims of the present application:

01/23/2004 HDAMTE1 00000154 10611218
01 FC:1460 130.00 OP

UNITED STATES PATENT AND TRADEMARK OFFICE

UNITED STATES DEPARTMENT OF COMMERCE
United States Patent and Trademark Office
Address: COMMISSIONER FOR PATENTS
P.O. Box 1450
Alexandria, Virginia 22313-1450
www.uspto.gov

IBM CORPORATION, T.J. WATSON RESEARCH CENTER
P.O. BOX 218
YORKTOWN HEIGHTS, NY 10598

Mail Date: 04/20/2010

Applicant	: Ching-Yung Lin	: DECISION ON REQUEST FOR
Patent Number	: 7610306	: RECALCULATION of PATENT
Issue Date	: 10/27/2009	: TERM ADJUSTMENT IN VIEW
Appliction No	: 10/611,235	: OF WYETH AND NOTICE OF INTENT TO
Filed	: 06/30/2003	: ISSUE CERTIFICATE OF CORRECTION
		:

The Request for Recalculation is **GRANTED** to the extent indicated.

The patent term adjustment has been determined to be **522** days. The USPTO will *sua sponte* issue a certificate of correction reflecting the amount of PTA days determined by the recalculation.

Prior to the issuance of the certificate of correction, the USPTO will afford patentee an opportunity to be heard and request reconsideration. Accordingly, patentee has **one month or thirty (30) days**, whichever is longer, to file a request for reconsideration of this patent term adjustment calculation. See 35 U.S.C. 154(b)(3)(B)(ii) and 37 CFR 1.322(a)(4). No extensions of time will be granted under 37 CFR 1.136.

Patentee should use document code PET.OP if electronically filing a request for reconsideration of this patent term adjustment calculation. The patentee must also include the information required by 37 CFR 1.705(b)(2) and the fee required by 37 CFR 1.18(e). If patentee does not file a timely request for reconsideration of this patent term adjustment calculation including the information required by 37 CFR 1.705(b)(2) and the fee required by 37 CFR 1.18(e), the USPTO will issue a certificate of correction reflecting the PTA determination noted above.

Patentee should be aware that in order to preserve the right to review in the United States District Court for the District of Columbia of the USPTO patent term adjustment determination, patentee must ensure that he or she also take the steps required under 35 U.S.C. 154(b)(4)(A) in a timely manner. Nothing in the request for recalculation should be construed as providing an alternative time frame for commencing a civil action under 35 U.S.C. 154(b)(4)(A).

Any questions concerning this decision should be directed to the Office of Patent Legal Administration at 571-272-7702.

UNITED STATES PATENT AND TRADEMARK OFFICE

Commissioner for Patents
United States Patent and Trademark Office
P.O. Box 1450
Alexandria, VA 22313-1450
www.uspto.gov

BLAKELY SOKOLOFF TAYLOR & ZAFMAN LLP
1279 OAKMEAD PARKWAY
SUNNYVALE CA 94085-4040

COPY MAILED
JUN 26 2008
OFFICE OF PETITIONS

In re Application of	:	
R. HUGO PATTERSON	:	
Application No. 10/611,237	:	DECISION ON PETITION
Filed: 06/30/2003	:	
Attorney Docket No. 6368P001	:	

This is a decision on the petition under 37 CFR 1.181, filed October 15, 2007, to withdraw the holding of abandonment for the above-identified application. This is also a decision on the petition under 37 CFR 1.137(b), filed October 15, 2007, to revive the application. The petitions were recently forwarded to the Office of Petitions for a decision on the merits. The Office sincerely apologizes for any inconvenience.

The application became abandoned for failure to timely pay the issue fee within the three-month statutory period for reply to the Notice of Allowance and Fee(s) Due mailed on May 30, 2007. Accordingly, the application became abandoned on August 31, 2007. A Notice of Abandonment was mailed on September 8, 2007.

On March 9, 2007, the Office mailed a Notice of Allowance and Fee(s) Due, requiring payment of the issue fee or another acceptable reply on or before June 11, 2007. In response, on March 21, 2007, petitioners filed a Request for Continued Examination and an IDS, which in turn reopened prosecution of the application. Thereafter, on May 14, 2007, petitioners attempted to pay the issue fee by check, which was subsequently refunded as being paid too early. On May 30, 2007, the Office allowed the application again and mailed a new Notice of Allowance and Fee(s) Due, requiring payment of the issue fee on or before August 30, 2007.

Petition under 37 CFR 1.181

Petitioners assert that they timely paid the issue fee in response to the Notice of Allowance of March 9, 2007. Petitioners stated that they received the new Notice of Allowance mailed May 30, 2007, but did not respond because they had already timely responded to the first Notice of Allowance.

There is no dispute that petitioners submitted a payment of $1,400.00 on May 14, 2007. However, the $1,400.00 could not be applied to the payment of the issue fee because the filing of the RCE reopened prosecution and a new Notice of Allowance had not been mailed. Additionally, the payment was refunded to petitioners before the mailing of the new Notice of Allowance on May 30, 2007.

The new Notice of Allowance of May 30, 2007, indicated that the issue fee due indicated in the Notice reflected a credit for any previously paid issue fee in the application. The Notice stated that **the PTOL-85B (or an equivalent) must be returned by August 30, 2007, even if no fee was due, or the application would be regarded as abandoned.** Petitioners are required to reply to an Office action within the time period set forth in that action to avoid abandonment of the application. See 37 CFR 1.135. In this instance, the Notice of Allowance of May 30, 2007, required petitioners to reply to the Notice and return the PTOL-85b within three months of the mailing date, even if no fee was due, or the application would be regarded as abandoned. Nevertheless, the record indicates that petitioners did not take any appropriate action, such as paying the issue fee and returning the PTOL-85B or submitting a communication disputing the requirements of the Notice of Allowance, within the three-month statutory period. For this reason, the application is abandoned and the petition to withdraw the holding of abandonment is **dismissed.**

Petition under 37 CFR 1.137(b)

The petition satisfies the requirements of 37 CFR 1.137(b) in that petitioners have supplied (1) the reply in the form of an authorization to charge the Deposit Account for the issue fee; (2) the petition fee; and (3) a proper statement of unintentional delay.

The issue fee of $1,440.00 will be charged to the Deposit Account as authorized.

The petition to revive the application under 37 CFR 1.137(b) is **granted**.

This application is being referred to the Office of Data Management for processing of a patent.

Telephone inquiries concerning the issuance of the application into a patent should be directed to the Office of Data Management, Customer Service at (571) 272-4200.

Telephone inquiries specifically concerning this decision should be directed to the undersigned at (571) 272-3211.

Christina T. Donnell

Christina Tartera Donnell
Senior Petitions Attorney
Office of Petitions

UNITED STATES PATENT AND TRADEMARK OFFICE

Commissioner for Patents
United States Patent and Trademark Office
P.O. Box 1450
Alexandria, VA 22313-1450
www.uspto.gov

COPY MAILED

SEP 07 2005

OFFICE OF PETITIONS

MATRIX SEMICONDUCTOR, INC.
3230 SCOTT BOULEVARD
SANTA CLARA CA 95054

In re Application of	:	
S. Brad Herner	:	
Application No. 10/611,245	:	ON PETITION
Filed: June 30, 2003	:	
Attorney Docket No. MA-103	:	

This is a decision on the petition under 37 CFR 1.137(b), filed July 28, 2005, to revive the above-identified application.

The petition is **GRANTED**.

The above-identified application became abandoned for failure to submit the issue fee and publication fee in a timely manner in reply to the Notice of Allowance mailed February 28, 2005, which set a statutory period for reply of three (3) months. Accordingly, the above-identified application became abandoned on May 31, 2005.

Telephone inquiries concerning this decision should be directed to the undersigned at (571) 272-3208.

This matter is being referred to Patent Publication.

Karen Creasy

Karen Creasy
Petitions Examiner
Office of Petitions
Office of the Deputy Commissioner
for Patent Examination Policy

UNITED STATES PATENT AND TRADEMARK OFFICE

COMMISSIONER FOR PATENTS
UNITED STATES PATENT AND TRADEMARK OFFICE
P.O. BOX 1450
ALEXANDRIA, VA 22313-1450
www.uspto.gov

HARRITY SNYDER, LLP
11350 Random Hills Road
SUITE 600
FAIRFAX VA 22030

COPY MAILED

MAR 20 2007

OFFICE OF PETITIONS

In re Application of	:	
BHARAT et al	:	
Application No.: 10/611,269	:	DECISION ON PETITION
Filing Date: June 30, 2003	:	UNDER 37 CFR 1.137(b)
Attorney Docket No.: Google-00400	:	

This is a decision on the petition under 37 CFR 1.137(b), filed September 26, 2006, to revive the above-identified application.

The petition is **GRANTED.**

The above-identified application became abandoned for failure to reply in a timely manner to the non-final Office action mailed November 2, 2005, which set a shortened statutory period for reply of one (1) month. No extensions of time under the provisions of 37 CFR 1.136(a) were obtained. Accordingly, by operation of law, the above-identified application became abandoned on December 2, 2005.

The petition satisfies the conditions for revival pursuant to the provisions of 37 CFR 1.137(b) in that (1) the reply in the form of response to restriction requirement; (2) the petition fee; and (3) the required statement of unintentional delay have been received. Accordingly, the reply to the Office action mailed November 2, 2005 is accepted as having been unintentionally delayed.

This application is being referred to Technology Center AU 2178 for appropriate action, if any, on the reply in due course.

Telephone inquiries concerning this decision should be directed to the undersigned at (571) 272-3301.

Daniel Stemmer
Legal Examiner
Office of the Deputy Commissioner
for Patent Examination Policy

UNITED STATES PATENT AND TRADEMARK OFFICE

COMMISSIONER FOR PATENTS
UNITED STATES PATENT AND TRADEMARK OFFICE
P.O. BOX 1450
ALEXANDRIA, VA 22313-1450
www.uspto.gov

MAR 19 2004

In re Application of	:	
Kim Davis et al.	:	
Serial No. 10/611,727	:	DECISION ON PETITION
Filed: July 1, 2003	:	TO MAKE SPECIAL
For: SIZING TAG	:	

Applicant's petition, filed August 21, 2003, seeks to have this application made special pursuant to the Accelerated Examination Program. The petition is GRANTED.

The petition has been reviewed and is found to be in compliance with the requirements for special status as set forth in Section 708.02(VIII) of the Manual of Patent Examining Procedures (MPEP).

Applicant is advised that the examiner's search will be restricted to the subject matter encompassed by the claims. In the event that the application receives a first action rejection, applicant is encouraged to arrange for an interview with the examiner, and to provide the examiner with a working copy of any proposed amendment one working day prior to the interview. Any amendment filed in response to a first action rejection which would require broadening of the field of search will be treated as an improper response.

PETITION GRANTED.

E. Rollins-Cross, Director
Technology Center 3700

Notaro and Michalos
100 Dutch Hill Road, Suite 110
Orangeburg, NY 10962-2100

UNITED STATES PATENT AND TRADEMARK OFFICE

Commissioner for Patents
United States Patent and Trademark Office
P.O. Box 1450
Alexandria, VA 22313-1450
www.uspto.gov

TOWNSEND AND TOWNSEND AND CREW, LLP
TWO EMBARCADERO CENTER
EIGHTH FLOOR
SAN FRANCISCO, CA 94111-3834

COPY MAILED

MAR 3 1 2009

OFFICE OF PETITIONS

In re Application of	:	
Ian MacLachlan	:	
Application No. 10/611,274	:	DECISION ON PETITION
Filed: June 30, 2003	:	
Attorney Docket No. 020801-001210US	:	

This is a decision on the petition under the unintentional provisions of 37 CFR 1.137(b), filed February 13, 2009, to revive the above-identified application.

This application became abandoned for failure to timely file a reply to the final Office action of July 25, 2008.

The petition satisfies the requirements of 37 CFR 1.137(b) in that petitioner has supplied (1) the reply in the form of a Notice of Appeal with the $270 fee; (2) the petition fee of $810; and (3) a proper statement of unintentional delay. Therefore, the petition is granted.

The two-month period for filing an appeal brief under 37 CFR 41.37 (accompanied by the $270 fee required by 37 CFR 41.20(b)(2)), runs from the date of this decision.

Telephone inquiries concerning this decision should be directed to the undersigned at (571) 272-3226.

This application is being referred to Technology Center Art Unit 1616 to await the filing of an appeal brief or for such other appropriate reply as may be submitted to continue prosecution of the application.

Andrea Smith
Petitions Examiner
Office of Petitions

UNITED STATES PATENT AND TRADEMARK OFFICE

COMMISSIONER FOR PATENTS
UNITED STATES PATENT AND TRADEMARK OFFICE
P.O. BOX 1450
ALEXANDRIA, VA 22313-1450
www.uspto.gov

Beyer Weaver & Thomas, LLP
P. O. Box 70250
Oakland, CA 94612-0250

COPY MAILED
FEB 2 2 2005
OFFICE OF PETITIONS

In re Application of	:	
Alton H. Phillips, et al.	:	
Application No. 10/611,275	:	ON PETITION
Filed: June 30, 2003	:	
Attorney Docket No. NIKOP006D1	:	

This is a decision on the petition under 37 CFR 1.137(b), filed July 6, 2004, to revive the above-identified application.

The petition is **GRANTED**.

A Notice of Allowance and a Notice of Allowability were mailed to applicant on March 18, 2004, that set a three-month statutory period within which to submit payment of the issue fee and corrected drawings. A supplemental Notice of Allowability was mailed to applicant on May 26, 2004. Nevertheless, the supplemental notice did not restart the time period set forth in the previous Notices. In view thereof, applicant was required to submit the issue fee and corrected drawings no later than June 18, 2004. Accordingly, the application became abandoned on June 19, 2004 since the drawings were not timely filed. In view of the above, the instant petition is necessary and the petition fee of $1330 will be charged to petitioner's deposit account in due course.

Telephone inquiries concerning this decision should be directed to the undersigned at (571) 272-3223.

The application file is being referred to the Publishing Division to be processed into a patent.

Marianne E. Jenkins

Marianne E. Jenkins
Petitions Examiner
Office of Petitions
Office of the Deputy Commissioner
for Patent Examination Policy

SPE RESPONSE FOR CERTIFICATE OF CORRECTION

Paper No.: _____

DATE : March 5, 2009

TO SPE OF : ART UNIT 3737

SUBJECT : Request for Certificate of Correction for Appl. No.: 10/611296 / 7412280

Please respond to this request for a certificate of correction within 7 days.

FOR IFW FILES: Check all Requests, 9-5-08-3-2-09.

Please review the requested changes/corrections as shown in the **COCIN** document(s) in the IFW application image. No new matter should be introduced, nor should the scope or meaning of the claims be changed.

Please complete the response (see below) and forward the completed response to scanning using document code **COCX**.

FOR PAPER FILES:

Please review the requested changes/corrections as shown in the attached certificate of correction. Please complete this form (see below) and forward it with the file to:

Certificates of Correction Branch (CofC)
South Tower - 9A22
Palm Location 7580

Magdalene Talley
Certificates of Correction Branch
703-308-9390 ext. 120

Thank You For Your Assistance

The request for issuing the above-identified correction(s) is hereby:

Note your decision on the appropriate box.

- ☒ **Approved** — **All** changes apply.
- ☐ **Approved in Part** — Specify below which changes **do not** apply.
- ☐ **Denied** — State the reasons for denial below.

Comments: _____

BRIAN L. CASLER
SUPERVISORY PATENT EXAMINER
TECHNOLOGY CENTER 3700
SPE

3737
Art Unit

UNITED STATES PATENT AND TRADEMARK OFFICE

COMMISSIONER FOR PATENTS
UNITED STATES PATENT AND TRADEMARK OFFICE
P.O. BOX 1450
ALEXANDRIA, VA 22313-1450
www.uspto.gov

Paper No. 10

EDMUND S LEE III
104 FIELDSTONE DRIVE
TERRACE PARK OH 45174

COPY MAILED
FEB 03 2004
OFFICE OF PETITIONS

In re Application of :
Donald C. Anderson :
Application No. 10/611,303 : DECISION ON PETITION
Filed: October 20, 2003 :
Title: MALODOR CONTROL SYSTEMS FOR :
TOILETS

This is a decision on the paper titled "Petition for Filing Date", filed October 20, 2003 (Certificate of Mailing dated October 14, 2003), which is being treated as a petition under 37 CFR 1.182, requesting, in effect, that the above-identified application be accorded a filing date of October 20, 2003, the submission date of the omitted drawing figures 12 and 13.

Application papers in the above-identified application were filed on July 2, 2003. However, on September 29, 2003, the Initial Patent Examination Division mailed applicant a "Notice of Omitted Items in a Nonprovisional Application." Applicant was notified that the application papers had been accorded a filing date; however, Figures 12 and 13 of the drawings appeared to have been omitted.

In response, applicant timely filed the instant petition. Applicant has admitted that Figures 12 and 13 were omitted from the originally submitted application, and has requested that the application be accorded a filing date as of the filing date of the petition. A replacement Figure 12 and 13 of the drawings accompanied the petition, together with a supplemental oath or declaration.

Accordingly, the petition is **GRANTED**.

The application is being forwarded to the Office of Initial Patent Examination (OIPE) for further processing with a new filing date of October 20, 2003, using the application papers received in the Office on July 2, 2003, and the missing figures of drawings, Figures 12 and 13, submitted on petition filed October 20, 2003. Applicant will receive appropriate notifications regarding the fees owed, if any, and other information in due course from OIPE.

Telephone inquiries related to this decision should be directed to the undersigned at 703-305-0272.

Cliff Congo

Cliff Congo
Petitions Attorney
Office of Petitions

UNITED STATES PATENT AND TRADEMARK OFFICE

COMMISSIONER FOR PATENTS
UNITED STATES PATENT AND TRADEMARK OFFICE
P.O. BOX 1450
ALEXANDRIA, VA 22313-1450
www.uspto.gov

AUG 11 2004

In re Application of
Donald C. Anderson
Application No. 10/611,303
Filed: October 20, 2003
For: Malodor Control Systems for Toilets

DECISION ON PETITION

This is a decision on the petition to make special filed that was originally filed on July 2, 2003. The petition to make special is based upon applicant's age, so there is no fee required. See 37 CFR 1.02(c).

The petition is granted.

A review of the petition shows that all of the requirements established in MPEP § 708.02(IV) for a petition based upon applicant's age have been satisfied by applicant's verified statement that he is more than 65 years of age; MPEP § 708.02(IV) does not require that applicant's statement be verified. Therefore, petitioner is entitled to have this application handled special in accordance with MPEP § 708.02, subsection styled "Handling of Petitions to Make Special".

Accordingly, the examiner will treat this application as special throughout its prosecution. Prior to the next action, the examiner will conduct a rigorous search for potentially interfering applications. The interference search will be brought up to date prior to each successive action.

The Supervisory Patent Examiner of Patent Examining Art Unit 3751 is being advised of the granting of the instant petition, and will in turn advise the examiner to whom the application is assigned of the special status of this application and the need for future action consistent with this Decision.

PETITION GRANTED.

Stephen Marcus, Special Program Examiner,
Technology Center 3700

Edmund S. Lee III
104 Fieldstone Drive
Terrace Park, OH 45174

UNITED STATES PATENT AND TRADEMARK OFFICE

Commissioner for Patents
United States Patent and Trademark Office
P.O. Box 1450
Alexandria, VA 22313-1450
www.uspto.gov

MAILED
FROM DIRECTORS OFFICE

DEC 21 2006

TECHNOLOGY CENTER 3600

PETER K. TRZYNA
P.O. BOX 7131
CHICAGO, IL 60680-7131

In re application of
Richard A. Graff
Application No. 10/611,305
Filed: June 30, 2003
For: COMPUTER SUPPORT FOR VALUING AND TRADING SECURITIES THAT PRODUCE MOSTLY TAX-EXEMPT INCOME

DECISION ON PETITION TO MAKE SPECIAL (ACCELERATED EXAMINATION)

This is in response to the petition filed on June 30, 2003 to make the above-identified application special on the basis of special examining procedure for certain new applications - accelerated examination as set forth in MPEP § 708.02 VIII.

The requirements for granting special status under this section are: (A) a petition to make special accompanied by the fee set forth in 37 CFR 1.17(i); (B) all claims being directed to a single invention, or an election without traverse if the Office determines that all the claims are not directed to a single invention; (C) a statement that a pre-examination search was made listing the field of search; (D) one copy of each of the references deemed most closely related to the subject matter encompassed by the claims if said references are not already of record; and (E) a detailed discussion of how the claimed subject matter is patentable over the references in accordance with 37 CFR 1.111 (b) and (c).

Since all of the requirements for special status under MPEP § 708.02 VIII have been met, the petition is **GRANTED**.

The examiner is directed (1) to make an interference search for possible interfering applications, (2) to promptly examine this application out of turn, and (3) if any interfering application is discovered, to examine such application simultaneously and state in the first official letter of such application that it is being taken out of turn because of a possible interference.

Petitioner is advised that this application will continue to be special, throughout its entire prosecution and pendency, including interference or appeal, if any, only if petitioner makes a prompt ***bona fide*** effort, in response to each Office action, to place the application in condition for allowance, even if it is necessary to conduct an interview with the examiner to accomplish this purpose.

SUMMARY: Petition to Make Special **GRANTED.**

Kenneth J. Dorner
Special Programs Examiner
Technology Center 3600
(571) 272-6587

KJD/slb: 12/20/06

UNITED STATES PATENT AND TRADEMARK OFFICE

Commissioner for Patents
United States Patent and Trademark Office
P.O. Box 1450
Alexandria, VA 22313-1450
www.uspto.gov

MERCHANT & GOULD PC
P.O. BOX 2903
MINNEAPOLIS, MN 55402-0903

COPY MAILED

JUN 17 2005

OFFICE OF PETITIONS

In re Application No. 10/611,307 :
Reissue of Patent No. 6,320,214 :
Original Issue Date: November 20, 2001 :
Reissue Filing Date: not accorded :
Attorney Docket No. 10873.352USRE :

Decision on Petition

This is a decision on the petition filed June 14, 2004, to accord the above-identified application a filing date of July 1, 2003.

The petition is **dismissed**.

Any request for reconsideration must be submitted within TWO (2) MONTHS from the mail date of this decision. No further petition fee is required for the request. Extensions of time under 37 CFR 1.136(a) are NOT permitted. This is **not** final agency action within the meaning of 5 U.S.C. § 704.

Since this is a reissue application, the content of the specification, claims, and drawings are not in question. Therefore, on petition, copies of the specification, claims, and drawings may be entered and the application can be accorded a filing date of July 1, 2003. Petitioner alleges copies of these documents have been provided. However, such copies cannot be located in the file. A "new" copy of the prior specification, claims, and drawings should be submitted. Petitioner should ensure the copy complies with the requirements of 37 CFR 1.173. The submission of the "new" copy should result in the grant of the renewed petition.

A petition fee of $130 will be charged to petitioner's deposit account since a petition was necessary for the relief requested. Specifically, petitioner has not proven a copy of the prior patent was filed on July 1, 2003. The postcard receipt indicates an Office employee verified the papers included at least one copy of a patent. The file includes a copy of a foreign patent with a patent number of JP9321249. The postcard does not prove that a copy of patent no. 6,320,214 was present at filing.

Further correspondence with respect to this matter should be addressed as follows:

By mail: Mail Stop Petition
Commissioner for Patents
P.O. Box 1450
Alexandria, VA 22313-1450

By facsimile: (703) 872-9306
Attn: Office of Petitions

If a request for reconsideration is filed, and a decision on the new petition is not received within three months, petitioner may wish to call the number below to check on the status of the renewed petition.

Telephone inquiries should be directed to Petitions Attorney Steven Brantley at (571) 272-3206.

Charles Steven Brantley
Senior Petitions Attorney
Office of Petitions

O.I.P.E. JUL 18 2005 PATENT & TRADEMARK OFFICE

07/19/05

IFW

S/N 10/611,307 PATENT

IN THE UNITED STATES PATENT AND TRADEMARK OFFICE

Applicant:	MATSUDA	Examiner:	UNKNOWN
Serial No.:	10/611,307	Group Art Unit:	UNKNOWN
Reissue File Date:	July 1, 2003	Docket No.:	10873.0352USRE
Title:	SEMICONDUCTOR DEVICE AND METHOD FOR MANUFACTURING THE SAME		

CERTIFICATE UNDER 37 CFR 1.10:
"Express Mail" mailing label number: ED769615714US
Date of Deposit: July 18, 2005

I hereby certify that this paper or fee is being deposited with the U.S. Postal Service "Express Mail Post Office to Addressee" service under 37 CFR 1.10 on the date indicated above and is addressed to Commissioner for Patents, Mail Stop AF, P.O. Box 1450, Alexandria, VA 22313-1450.

By: _____
Name: Yuhgo Maruta

COMMUNICATION REGARDING DECISION ON PETITION

Mail Stop Petition
Commissioner for Patents
P.O. Box 1450
Alexandria, VA 22313-1450

Dear Sir:

In response to the Decision on Petition mailed June 17, 2005, Applicant hereby submits a new copy of the prior specification, claims and drawings and confirms that this request for reconsideration is timely filed within two months of the dismissed petition.
Please charge the $130.00 petition fee to Deposit Account No. 50-3478. Please charge any additional fees or credit overpayment to Deposit Account No. 50-3478.

Respectfully submitted,

Hamre, Schumann,
Mueller & Larson, P.C.
P.O. Box 2902-0902
Minneapolis, MN 55402
Phone: 612-455-3800

Date: July 18, 2005

By _____
Name: Douglas P. Mueller
Reg. No. 30,300
Customer No. 52835

07/20/2005 MAHMED1 00000041 503478 10611307
01 FC:1464 130.00 DA

UNITED STATES PATENT AND TRADEMARK OFFICE

Commissioner for Patents
United States Patent and Trademark Office
P.O. Box 1450
Alexandria, VA 22313-1450
www.uspto.gov

QUALCOMM INCORPORATED
5775 MOREHOUSE DR.
SAN DIEGO CA 92121

COPY MAILED

MAR 1 1 2008

OFFICE OF PETITIONS

In re Application of	:	
Odenwalder et al.	:	
Application No. 10/611,333	:	DECISION ON PETITION
Filed: June 30, 2003	:	
Attorney Docket No. 030240	:	

This is a decision on the petition under the unintentional provisions of 37 CFR 1.137(b), filed February 6, 2008, to revive the above-identified application.

The petition is **GRANTED**.

The petition satisfies the requirements of 37 CFR 1.137(b) in that petitioner has supplied (1) the reply in the form of an Amendment, (2) the petition fee, and (3) a proper statement of unintentional delay.

Telephone inquiries concerning this decision should be directed to the undersigned at (571) 272-3206.

This matter is being referred to Technology Center 2616 for further examination on the merits.

Liana Walsh
Petitions Examiner
Office of Petitions

UNITED STATES PATENT AND TRADEMARK OFFICE

Commissioner for Patents
United States Patent and Trademark Office
P.O. Box 1450
Alexandria, VA 22313-1450
www.uspto.gov

INTEL/BSTZ
BLAKELY SOKOLOFF TAYLOR & ZAFMAN LLP
1279 OAKMEAD PARKWAY
SUNNYVALE CA 94085-4040

MAILED

MAY 12 2009

OFFICE OF PETITIONS

In re Application of :
William W. Macy Jr. :
Application No. 10/611,344 :
Filed: June 30, 2003 :
Attorney Docket No. 42P15762 :

ON PETITION

This is a decision on the petition under the unintentional provisions of 37 CFR 1.137(b), filed March 31, 2009, to revive the above-identified application.

The petition is **GRANTED**.

The application became abandoned for failure to reply in a timely manner to the final rejection mailed December 27, 2007.

The petition satisfies the requirements of 37 CFR 1.137(b) in that petitioner has supplied (1) the reply in the form of a continuing application under 37 CFR 1.53(b); (2) the petition fee of $1,620.00; and (3) a proper statement of unintentional delay.

This application is being revived solely for purposes of continuity. As continuity has been established by this decision, the application is again abandoned in favor of a continuing application filed March 31, 2009.

Telephone inquiries concerning this decision should be directed to the undersigned at (571) 272-3208.

Karen Creasy

Karen Creasy
Petitions Examiner
Office of Petitions

SPE RESPONSE FOR CERTIFICATE OF CORRECTION

Paper No.: X

DATE : July 17, 2008

TO SPE OF : ART UNIT 1647

SUBJECT : Request for Certificate of Correction for Appl. No.: 10/611363 Patent No.: 7381792 B2

A response is requested with respect to a request for a certificate of correction.

With respect to the change(s) requested to correct Office and/or Applicant's errors, should the patent read as shown in the certificate of correction attached herewith or the COCIN document(s), in IFW images for the above-identified patented application? No new matter should be introduced, nor should the scope or meaning of the claims be changed.

If the response is for an IFW, within 7 days, please complete and forward the response, to the employee (named below) via scanning into application images, using document code COCX.

DO NOT SENT TO ATTORNEY

If the response is for a paper file wrapper, please complete the response and forward the response with the paper file wrapper, to the employee (named below), within 7 days, to:

Certificates of Correction Branch (CofC)
South Tower - 9A22
Palm Location 7580

You can fax the Directors SPE response to 571-270-9990

LAMONTE NEWSOME
Certificates of Correction Branch
703-308-9390 ext. 112

Thank You For Your Assistance

The request for issuing the above-identified correction(s) is hereby:
Note your decision on the appropriate box.

- [x] **Approved** — All changes apply.
- [ ] **Approved in Part** — Specify below which changes **do not** apply.
- [ ] **Denied** — State the reasons for denial below.

Comments: _____

SPE

1647
Art Unit

nd Trademark Office

UNITED STATES PATENT AND TRADEMARK OFFICE

UNITED STATES DEPARTMENT OF COMMERCE
United States Patent and Trademark Office
Address: COMMISSIONER FOR PATENTS
P.O. Box 1450
Alexandria, Virginia 22313-1450
www.uspto.gov

NOVARTIS VACCINES AND DIAGNOSTICS INC.
INTELLECTUAL PROPERTY- X100B
P.O. BOX 8097
Emeryville, CA 94662-8097

Mail Date: 04/21/2010

Applicant	: Mariagrazia Pizza	: DECISION ON REQUEST FOR
Patent Number	: 7632513	: RECALCULATION of PATENT
Issue Date	: 12/15/2009	: TERM ADJUSTMENT IN VIEW
Appliction No	: 10/611,398	: OF WYETH AND NOTICE OF INTENT TO
Filed	: 06/30/2003	: ISSUE CERTIFICATE OF CORRECTION
		:

The Request for Recalculation is **GRANTED** to the extent indicated.

The patent term adjustment has been determined to be **1192** days. The USPTO will *sua sponte* issue a certificate of correction reflecting the amount of PTA days determined by the recalculation.

Prior to the issuance of the certificate of correction, the USPTO will afford patentee an opportunity to be heard and request reconsideration. Accordingly, patentee has **one month or thirty (30) days**, whichever is longer, to file a request for reconsideration of this patent term adjustment calculation. See 35 U.S.C. 154(b)(3)(B)(ii) and 37 CFR 1.322(a)(4). No extensions of time will be granted under 37 CFR 1.136.

Patentee should use document code PET.OP if electronically filing a request for reconsideration of this patent term adjustment calculation. The patentee must also include the information required by 37 CFR 1.705(b)(2) and the fee required by 37 CFR 1.18(e). If patentee does not file a timely request for reconsideration of this patent term adjustment calculation including the information required by 37 CFR 1.705(b)(2) and the fee required by 37 CFR 1.18(e), the USPTO will issue a certificate of correction reflecting the PTA determination noted above.

Patentee should be aware that in order to preserve the right to review in the United States District Court for the District of Columbia of the USPTO patent term adjustment determination, patentee must ensure that he or she also take the steps required under 35 U.S.C. 154(b)(4)(A) in a timely manner. Nothing in the request for recalculation should be construed as providing an alternative time frame for commencing a civil action under 35 U.S.C. 154(b)(4)(A).

Any questions concerning this decision should be directed to the Office of Patent Legal Administration at 571-272-7702.

UNITED STATES PATENT AND TRADEMARK OFFICE

Commissioner for Patents
United States Patent and Trademark Office
P.O. Box 1450
Alexandria, VA 22313-1450
www.uspto.gov

COPY MAILED

AUG 05 2008

FISH & RICHARDSON PC
PO BOX 1022
MINNEAPOLIS MN 55440-1022

In re Application of	:	
Proudfoot, et al.	:	
Application No. 10/611,408	:	ON PETITION
Filed: June 30, 2003	:	
Attorney Docket No. 16113-1304001	:	

This is a decision on the petition under 37 CFR 1.137(b), filed July 9, 2008, to revive the above-identified application.

The petition under 37 CFR 1.137(b) is **GRANTED**.

The above-identified application became abandoned for failure to timely file a response to the non-final Office action mailed June 13, 2007. This Office action set an extendable period for reply of three months. No extensions of time were obtained. Accordingly, no reply having been received, the application became abandoned on September 14, 2007. A Notice of Abandonment was mailed on December 31, 2007.

With the instant petition, applicants paid the petition fee, made the proper statement of unintentional delay, and submitted the required reply in the form of an Amendment.

The matter is being forwarded to Group Art Unit 2625 for consideration of the Amendment filed July 9, 2008.

Telephone inquiries concerning this decision should be directed to the undersigned at (571)272-3207.

Cliff Congo
Petitions Attorney
Office of Petitions

UNITED STATES PATENT AND TRADEMARK OFFICE

UNITED STATES DEPARTMENT OF COMMERCE
United States Patent and Trademark Office
Address: COMMISSIONER FOR PATENTS
P.O. Box 1450
Alexandria, Virginia 22313-1450
www.uspto.gov

FISH & RICHARDSON P.C.
PO BOX 1022
MINNEAPOLIS, MN 55440-1022

Mail Date: 04/20/2010

Applicant	: R. Alexander Proudfoot	: DECISION ON REQUEST FOR
Patent Number	: 7639406	: RECALCULATION of PATENT
Issue Date	: 12/29/2009	: TERM ADJUSTMENT IN VIEW
Appliction No	: 10/611,408	: OF WYETH AND NOTICE OF INTENT TO
Filed	: 06/30/2003	: ISSUE CERTIFICATE OF CORRECTION
		:

The Request for Recalculation is **GRANTED** to the extent indicated.

The patent term adjustment has been determined to be **1612** days. The USPTO will *sua sponte* issue a certificate of correction reflecting the amount of PTA days determined by the recalculation.

Prior to the issuance of the certificate of correction, the USPTO will afford patentee an opportunity to be heard and request reconsideration. Accordingly, patentee has **one month or thirty (30) days**, whichever is longer, to file a request for reconsideration of this patent term adjustment calculation. See 35 U.S.C. 154(b)(3)(B)(ii) and 37 CFR 1.322(a)(4). No extensions of time will be granted under 37 CFR 1.136.

Patentee should use document code PET.OP if electronically filing a request for reconsideration of this patent term adjustment calculation. The patentee must also include the information required by 37 CFR 1.705(b)(2) and the fee required by 37 CFR 1.18(e). If patentee does not file a timely request for reconsideration of this patent term adjustment calculation including the information required by 37 CFR 1.705(b)(2) and the fee required by 37 CFR 1.18(e), the USPTO will issue a certificate of correction reflecting the PTA determination noted above.

Patentee should be aware that in order to preserve the right to review in the United States District Court for the District of Columbia of the USPTO patent term adjustment determination, patentee must ensure that he or she also take the steps required under 35 U.S.C. 154(b)(4)(A) in a timely manner. Nothing in the request for recalculation should be construed as providing an alternative time frame for commencing a civil action under 35 U.S.C. 154(b)(4)(A).

Any questions concerning this decision should be directed to the Office of Patent Legal Administration at 571-272-7702.

UNITED STATES PATENT AND TRADEMARK OFFICE

Commissioner for Patents
United States Patent and Trademark Office
P.O. Box 1450
Alexandria, VA 22313-1450
www.uspto.gov

LIFE TECHNOLOGIES CORPORATION
C/O INTELLEVATE
P.O. BOX 52050
MINNEAPOLIS, MN 55402

MAILED

JUN 2 1 2010

OFFICE OF PETITIONS

In re Application of :
David P. Holden et al :
Application No. 10/611,414 : ON PETITION
Filed: June 30, 2003 :
Attorney Docket No. 4908 US :

This is a decision on the petition under the unintentional provisions of 37 CFR 1.137(b), filed May 11, 2010, to revive the above-identified application.

The petition is **GRANTED.**

The application became abandoned for failure to timely file a reply within the meaning of 37 CFR 1.113 to the final Office action of June 24, 2009. The proposed reply required for consideration of a petition to revive must be a Notice of Appeal (and appeal fee required by 37 CFR 41.20(b)(2), an amendment that prima facie places the application in condition for allowance, a Request for Continued Examination and submission (37 CFR 1.114), or the filing of a continuing application under 37 CFR 1.53(b). See MPEP 711.03(c)(III)(A)(2). Three month extension of time pursuant to the provisions of 37 CFR 1.136(a) was obtained. Accordingly, the date of abandonment of this application is December 25, 2009.

The petition satisfies the requirements of 37 CFR 1.137(b) in that petitioner has supplied (1) the reply in the form of a Request for Continued Examination (RCE) and fee of $810 the submission required by 37 CFR 1.114; (2) the petition fee of $1620 and (3) a proper statement of unintentional delay.

The file does not indicate a change of address has been submitted, although the address given on the petition differs from the address of record. If appropriate, a change of address should be filed in accordance with MPEP 601.03. A courtesy copy of this decision is being mailed to the address given on the petition; however, the Office will mail all future correspondence solely to the address of record.

Telephone inquiries concerning this decision should be directed to the undersigned at (571) 272-3210.

This application is being referred to Technology Center AU 1631 for processing of the RCE and for appropriate action by the Examiner in the normal course of business on the amendment filed December 22, 2009 submitted in accordance with 37 CFR 1.114.

Irvin Dingle
Petition Examiner
Office of Petitions

cc: Sally A. Swedberg, Life Technologies Corporation
5791 Van Allen Way
Carlsbad, CA 92008

UNITED STATES PATENT AND TRADEMARK OFFICE

Commissioner for Patents
United States Patent and Trademark Office
P.O. Box 1450
Alexandria, VA 22313-1450
www.uspto.gov

Date : September 5, 2006

Patent No. :6,893,055
Inventor(s) :Jeltsch, et al.
Issued :May 17, 2005
Title :SNAP CONNECTION FOR CONNECTING TWO TUBES ENDS
Doc./File No :041463-5033

Re: Request for Certificate of Correction

Consideration has been given your request for the issuance of a certificate of correction and a corrected patent under the provisions of Rule 1.322.

Again, with respect to applicants request for reconsideration, a petition under C.F.R. 1.182 is required to correct the alleged error concerning the inventors names as they appear on the Letters Patent since the inventors names are printed solely in accordance with the typed/printed names as they appear on the Oath/Declaration and/or Application data sheet. Therefore, no correction is in order here under the provisions of Rule 1.322 or 1.323.

Applicant's attention is directed to MPEP 605.04 and 37 CFR 1.48.

In view of the forgoing, applicants request in this matter is hereby denied.

Any petition under 37 CFR 1.182 (required fee currently $130) should be directed to the attention of the Assistant Commissioner for Patents, using the following mailing address or FAX number.

By Mail: Commissioner of Patents and Trademarks
Mail Stop: Petitions
Alexandria, VA 22313

By Fax: (571) 308-6916
Attn.: Office of Petitions

If the petition under 37 CFR 1.182 is filed and granted the patentee would be entitled to a certificate of correction under 37 CFR 1.323 (required fee currently $100), due to the mistake in not complying with CFR 3.81.

Any telephone inquiry concerning this communication should be directed to Ms. A. Green at (703) 308-9380 ext. 123.

for Cecelia Newman, Supervisor
Decisions & Certificates
of Correction
(703) 308-9390 or (703) 308-9380 ext. 123

Mary Jane Boswell
1111 Pennsylvania Avenue, N.W.
Washington, DC 20004

CBN/arg

UNITED STATES PATENT AND TRADEMARK OFFICE

COMMISSIONER FOR PATENTS
UNITED STATES PATENT AND TRADEMARK OFFICE
P.O. BOX 1450
ALEXANDRIA, VA 22313-1450
www.uspto.gov

MAIL

MAY 0 7 2004

DIRECTOR OFFICE
TECHNOLOGY CENTER 2600

PRESTON GATES ELLIS & ROUVELAS MEEDS LLP
1735 NEW YORK AVENUE, NW
SUITE 500
WASHINGTON DC 20006

In re Application of:
Joseph T. Ambrefe, Jr.
Application No. 10/611,430
Filed: 07/02/03
For: ADVERTISING TRAYS FOR SECURITY SCREENING

DECISION ON PETITION TO MAKE SPECIAL

This is a decision on the Petition To Make Special under MPEP 708.02, XI: Invention for Countering Terrorism, filed February 3, 2004.

A grantable petition to make an application special under 37 C.F.R. § 1.102(d), and in accordance with MPEP 708.02, XI, for an invention which contributes to the countering of terrorism, must include the petition fee under 37 CFR 1.17(i). The petition must also be accompanied by a statement explaining how the invention contributes to countering terrorism. Examples of the types of technology for countering terrorism are set forth in MPEP 708.02, XI as including, but not limited to, systems for detecting/identifying explosives, aircraft sensors/security systems, and vehicular barricades/disabling systems.

The statements made in the petition show how the technology of the instant application directly contributes to the countering of terrorism.

Accordingly, the petition is **GRANTED**.

The application file is being forwarded to the examiner for expedited action in its turn.

Krista Zele
Special Program Examiner
Technology Center 2600
Communications
(703) 305- 4701

BEST AVAILABLE COPY

UNITED STATES PATENT AND TRADEMARK OFFICE

Commissioner for Patents
United States Patent and Trademark Office
P.O. Box 1450
Alexandria, VA 22313-1450
www.uspto.gov

Fox Rothschild LLP
Bristol-Myers Squibb
2000 Market Street
10th Floor
Philadelphia PA 19103

MAILED

APR 23 2009

OFFICE OF PETITIONS

In re Patent No. 7,427,493	:	
Hutchinson et al.	:	DECISION ON REQUEST
Issue Date: September 23, 2008	:	FOR RECONSIDERATION OF
Application No. 10/611,442	:	PATENT TERM ADJUSTMENT
Filed: June 30, 2003	:	
Attorney Docket No. 020547-002510US	:	

This is in response to the "REQUEST FOR RECONSIDERATION OF PATENT TERM ADJUSTMENT PERIOD IN GRANTED PATENT UNDER 37 CFR 1.181 AND 1.705(d)," filed October 29, 2008, requesting that the patent term adjustment determination for the above-identified patent be changed from six hundred ninety (690) days to one thousand one hundred sixty-three (1163) days.

The request for reconsideration is granted to the extent that the determination has been reconsidered; however, the request for reconsideration of patent term adjustment is **DISMISSED** with respect to making any change in the patent adjustment determination under 35 U.S.C. § 154(b) of 690 days.

Patentees are given **TWO (2) MONTHS** to respond to this decision. No extensions of time will be granted under § 1.136(a).

On September 23, 2008, the above-identified application matured into US Patent No. 7,427,493 with a revised patent term adjustment of 690 days. This revised determination included entry of an additional period of adjustment of three hundred and forty-three (343) days for the Office taking in excess of three years to issue the patent.

This request for reconsideration of patent term adjustment was timely filed within two months of the issue date of the patent. See 1.705(d).

The Office acknowledges submission of the $200.00 fee set forth in 37 CFR 1.18(e). No additional fees are required.

Patentees request recalculation of the patent term adjustment based on the decision in Wyeth v. Dudas, 580 F. Supp. 2d 138, 88 U.S.P.Q. 2d 1538 (D.D.C. 2008). Patentees assert that pursuant to Wyeth, a PTO delay under §154(b)(1)(A) overlaps with a delay under §154(b)(1)(B) only if the delays "occur on the same calendar day or days." Patentees maintain that the period of adjustment due to the Three Year Delay by the Office, pursuant to 37 CFR § 1.703(b), of 816 days and the period of adjustment due to examination delay, pursuant to 37 CFR §1.702(a), of 473 days do not overlap as these periods do not occur on the same day.

Patentees argue that the period of adjustment due to the Three Year Delay by the Office, pursuant to 37 CFR § 1.703(b), is 816 days. This 816 day period is calculated based on the application having been filed under 35 U.S.C. §111(a) on June 30, 2003, and the patent having not issued until September 23, 2008, three years and 816 days later (i.e. July 1, 2006 to September 23, 2008). Patentees maintain that in addition to this 816 day period, they are entitled to a period of adjustment due to examination delay, pursuant to 37 CFR §1.702(a), of 473 days. This 473 day period is for failure by the Office to mail at least one of a notification under 35 U.S.C. 132 not later than fourteen months after the date on which the application was filed under 35 U.S.C. 111(a), pursuant to § 1.702(a)(1). A Restriction Requirement was mailed on December 16, 2005, which is 14 months and 473 days after the application was filed (i.e., August 1, 2004 to December 16, 2005).

Patentees further state, citing 37 CFR § 1.703(f), that they are entitled to a period of patent term adjustment equal to the period of delays based on the grounds set forth in 37 CFR §1.702 reduced by the period of time equal to the period of time during which Patentees failed to engage in reasonable efforts to conclude prosecution pursuant to 37 CFR §1.704. In other words, the period of Office delay reduced by the period of applicant delay. The period of reduction of 126 days for applicant delay

is not in dispute[1]. Patentees maintain that the total period of Office delay is the sum of the period of Three Years Delay (816 days) and the period of Examination Delay (473 days) to the extent that these periods of delay are not overlapping. As such, Patentees assert entitlement to a patent term adjustment of 1,163 days ((473 + 816) - 126).

The Office agrees that the patent issued 3 years and 816 days after its filing date. The Office agrees that the action detailed above was not taken within the specified time frame, and thus, the entry of period of adjustment of 473 days is correct. At issue is whether Patentees should accrue 816 days of patent term adjustment for the Office taking in excess of three years to issue the patent, as well as, 473 days for Office failure to take a certain action within a specified time frame (or examination delay).

The Office contends that 473 days overlap. Patentees' calculation of the period of overlap is inconsistent with the Office's interpretation of this provision. 35 U.S.C. 154(b)(2)(A) limits the adjustment of patent term, as follows:

> to the extent that the periods of delay attributable to grounds specified in paragraph (1) overlap, the period of any adjustment granted under this subsection shall not exceed the actual number of days the issuance of the patent was delayed.

Likewise, 37 CFR 1.703(f) provides that:

> To the extent that periods of delay attributable to the grounds specified in §1.702 overlap, the period of adjustment granted under this section shall not exceed the actual number of days the issuance of the patent was delayed.

As explained in *Explanation of 37 CFR 1.703(f) and of the United States Patent and Trademark Office Interpretation of 35 U.S.C. 154(b)(2)(A)*, 69 Fed. Reg. 34283 (June 21, 2004), the Office interprets 35 U.S.C. 154(b)(2)(A) as permitting either patent term adjustment under 35 U.S.C. 154(b)(1)(A)(i)-(iv), or patent

---

[1] The periods of reduction include pursuant to 37 CFR 1.704(b), 28 days for response filed August 15, 2006 and 15 days for response filed August 1, 2007; and pursuant to 37 CFR 1.704(c)(7), 83 days for the submission of a reply having an omission filed August 1, 2007 and not corrected until October 23, 2007.

term adjustment under 35 U.S.C. 154(b)(1)(B), but not as permitting patent term adjustment under both 35 U.S.C. 154(b)(1)(A)(i)-(iv) and 154(b)(1)(B). Accordingly, the Office implements the overlap provision as follows:

> If an application is entitled to an adjustment under 35 U.S.C. 154(b)(1)(B), the entire period during which the application was pending (except for periods excluded under 35 U.S.C. 154(b)(1)(B)(i)-(iii)), and not just the period beginning three years after the actual filing date of the application, is the period of delay under 35 U.S.C. 154(b)(1)(B) in determining whether periods of delay overlap under 35 U.S.C. 154(b)(2)(A). Thus, any days of delay for Office issuance of the patent more than 3 years after the filing date of the application, which overlap with the days of patent term adjustment accorded prior to the issuance of the patent will not result in any additional patent term adjustment. See 35 U.S.C. 154(b)(1)(B), 35 U.S.C. 154(b)(2)(A), and 37 CFR § 1.703(f). See *Changes to Implement Patent Term Adjustment Under Twenty Year Term; Final Rule*, 65 Fed. Reg. 54366 (Sept. 18, 2000). See also *Revision of Patent Term Extension and Patent Term Adjustment Provisions; Final Rule*, 69 Fed. Reg. 21704 (April 22, 2004), 1282 Off. Gaz. Pat. Office 100 (May 18, 2004). See also *Explanation of 37 CFR 1.703(f) and of the United States Patent and Trademark Office Interpretation of 35 U.S.C. 154(b)(2)(A)*, 69 Fed. Reg. 34283 (June 21, 2004).

The current wording of § 1.703(f) was revised in response to the misinterpretation of this provision by a number of Patentees. The rule was slightly revised to more closely track the corresponding language of 35 U.S.C. 154(b)(2)(A). The relevant portion differs only to the extent that the statute refers back to provisions of the statute whereas the rule refers back to sections of the rule. This was not a substantive change to the rule nor did it reflect a change of the Office's interpretation of 35 U.S.C. 154(b)(2)(A). As stated in the *Explanation of 37 CFR 1.703(f) and of the United States Patent and Trademark Office Interpretation of 35 U.S.C. 154(b)(2)(A)*, the Office has consistently taken the position that if an application is entitled to an adjustment under the three-year pendency provision of 35 U.S.C. 154(b)(1)(B), the entire period during which the application was pending before the Office (except for periods excluded under 35 U.S.C. 154(b)(1)(B)(i)-(iii)), and not

just the period beginning three years after the actual filing date of the application, is the relevant period under 35 U.S.C. 154(b)(1)(B) in determining whether periods of delay "overlap" under 35 U.S.C. 154(b)(2)(A).

This interpretation is consistent with the statute. Taken together the statute and rule provide that to the extent that periods of delay attributable to grounds specified in 35 U.S.C. 154(b)(1) and in corresponding §1.702 overlap, the period of adjustment granted shall not exceed the actual number of days the issuance of the patent was delayed. The grounds specified in these sections cover the A) guarantee of prompt Patent and Trademark Office responses, B) guarantee of no more than 3 year application pendency, and C) guarantee or adjustments for delays due to interference, secrecy orders and appeals. A section by section analysis of 35 U.S.C. 154(b)(2)(A) specifically provides that:

> Section 4402 imposes limitations on restoration of term. In general, pursuant to [35 U.S.C.] 154(b)(2)(A)-(C), total adjustments granted for restorations under [35 U.S.C. 154](b)(1) are reduced as follows: (1) To the extent that there are multiple grounds for extending the term of a patent that may exist simultaneously (e.g., delay due to a secrecy order under [35 U.S.C.] 181 and administrative delay under [35 U.S.C.] 154(b)(1)(A)), the term should not be extended for each ground of delay but only for the actual number of days that the issuance of a patent was delayed; See 145 Cong. Rec. S14,718[2]

As such, the period for over 3 year pendency does not overlap only to the extent that the actual dates in the period beginning three years after the date on which the application was filed overlap with the actual dates in the periods for failure of the Office to take action within specified time frames. In other words, consideration of the overlap does not begin three years after the filing date of the application. Treating the relevant period as starting on July 1, 2006, the date that is 3 years after the actual filing date of the application is incorrect.

---

[2] The AIPA is title IV of the Intellectual Property and Communications Omnibus Reform Act of 1999 (S. 1948), which was incorporated and enacted as law as part of Pub. L. 106-113. The Conference Report for H.R. 3194, 106th Cong. 1st Sess. (1999), which resulted in Pub. L. 106-113, does not contain any discussion (other than the incorporated language) of S. 1948. A section-by-section analysis of S. 1948, however, was printed in the Congressional Record at the request of Senator Lott, See 145 Cong. Rec. S14,708-26 (1999)(daily ed. Nov. 17, 1999).

In this instance, the relevant period under 35 U.S.C. 154(b)(1)(B) in determining whether periods of delay "overlap" under 35 U.S.C. 154(b)(2)(A) is the entire period during which the application was pending before the Office, June 30, 2003 to September 23, 2008. (There were no periods excluded under 35 U.S.C. 154(b)(1)(B)(i)-(iii)). 473 days of patent term adjustment were accorded prior to the issuance of the patent for the Office failing to respond within a specified time frame during the pendency of the application. All of these 473 days overlap with the 816 days for Office delay in issuing the patent. Accordingly, at issuance, the Office properly entered 343 days (816 - 473 days) additional days of patent term adjustment for the Office taking in excess of 3 years to issue the patent.

In view thereof, the Office affirms that the revised determination of patent term adjustment at the time of the issuance of the patent is 690 days.

Telephone inquiries specific to this matter should be directed to Shirene Willis Brantley, Senior Petitions Attorney, at (571) 272-3230.

Nancy Johnson
Senior Petitions Attorney
Office of the Deputy Commissioner
for Patent Examination Policy

UNITED STATES PATENT AND TRADEMARK OFFICE

UNITED STATES DEPARTMENT OF COMMERCE
United States Patent and Trademark Office
Address: COMMISSIONER FOR PATENTS
P.O. Box 1450
Alexandria, Virginia 22313-1450
www.uspto.gov

APPL NO.	FILING OR 371 (c) DATE	ART UNIT	FIL FEE REC'D	ATTY.DOCKET NO	DRAWINGS	TOT CLMS	IND CLMS
10/611,450	06/30/2003	2192	930	13768.438	3	30	3

CONFIRMATION NO. 1619

CORRECTED FILING RECEIPT

OC000000021201819

47973
WORKMAN NYDEGGER/MICROSOFT
1000 EAGLE GATE TOWER
60 EAST SOUTH TEMPLE
SALT LAKE CITY, UT 84111

Date Mailed: 11/13/2006

Receipt is acknowledged of this regular Patent Application. It will be considered in its order and you will be notified as to the results of the examination. Be sure to provide the U.S. APPLICATION NUMBER, FILING DATE, NAME OF APPLICANT, and TITLE OF INVENTION when inquiring about this application. Fees transmitted by check or draft are subject to collection. Please verify the accuracy of the data presented on this receipt. **If an error is noted on this Filing Receipt, please mail to the Commissioner for Patents P.O. Box 1450 Alexandria Va 22313-1450. Please provide a copy of this Filing Receipt with the changes noted thereon. If you received a "Notice to File Missing Parts" for this application, please submit any corrections to this Filing Receipt with your reply to the Notice. When the USPTO processes the reply to the Notice, the USPTO will generate another Filing Receipt incorporating the requested corrections (if appropriate).**

Applicant(s)

Patrick Tousignant, Bellevue, WA;

Power of Attorney: The patent practitioners associated with Customer Number **022913**.

Domestic Priority data as claimed by applicant

Foreign Applications

If Required, Foreign Filing License Granted: 11/05/2003

The country code and number of your priority application, to be used for filing abroad under the Paris Convention, is US10/611,450

Projected Publication Date: Not Applicable

Non-Publication Request: No

Early Publication Request: No

Title

Detecting termination and providing information related to termination of a computer system

process

Preliminary Class

717

PROTECTING YOUR INVENTION OUTSIDE THE UNITED STATES

Since the rights granted by a U.S. patent extend only throughout the territory of the United States and have no effect in a foreign country, an inventor who wishes patent protection in another country must apply for a patent in a specific country or in regional patent offices. Applicants may wish to consider the filing of an international application under the Patent Cooperation Treaty (PCT). An international (PCT) application generally has the same effect as a regular national patent application in each PCT-member country. The PCT process **simplifies** the filing of patent applications on the same invention in member countries, but **does not result** in a grant of "an international patent" and does not eliminate the need of applicants to file additional documents and fees in countries where patent protection is desired.

Almost every country has its own patent law, and a person desiring a patent in a particular country must make an application for patent in that country in accordance with its particular laws. Since the laws of many countries differ in various respects from the patent law of the United States, applicants are advised to seek guidance from specific foreign countries to ensure that patent rights are not lost prematurely.

Applicants also are advised that in the case of inventions made in the United States, the Director of the USPTO must issue a license before applicants can apply for a patent in a foreign country. The filing of a U.S. patent application serves as a request for a foreign filing license. The application's filing receipt contains further information and guidance as to the status of applicant's license for foreign filing.

Applicants may wish to consult the USPTO booklet, "General Information Concerning Patents" (specifically, the section entitled "Treaties and Foreign Patents") for more information on timeframes and deadlines for filing foreign patent applications. The guide is available either by contacting the USPTO Contact Center at 800-786-9199, or it can be viewed on the USPTO website at http://www.uspto.gov/web/offices/pac/doc/general/index.html.

For information on preventing theft of your intellectual property (patents, trademarks and copyrights), you may wish to consult the U.S. Government website, http://www.stopfakes.gov. Part of a Department of Commerce initiative, this website includes self-help "toolkits" giving innovators guidance on how to protect intellectual property in specific countries such as China, Korea and Mexico. For questions regarding patent enforcement issues, applicants may call the U.S. Government hotline at 1-866-999-HALT (1-866-999-4158).

LICENSE FOR FOREIGN FILING UNDER
Title 35, United States Code, Section 184
Title 37, Code of Federal Regulations, 5.11 & 5.15

GRANTED

The applicant has been granted a license under 35 U.S.C. 184, if the phrase "IF REQUIRED, FOREIGN FILING LICENSE GRANTED" followed by a date appears on this form. Such licenses are issued in all applications where the conditions for issuance of a license have been met, regardless of whether or not a license may be required as set forth in 37 CFR 5.15. The scope and limitations of this license are set forth in 37 CFR 5.15(a) unless an earlier license has been issued under 37 CFR 5.15(b). The license is subject to revocation upon written notification. The date indicated is the effective date of the license, unless an earlier license of similar scope has been granted under 37 CFR 5.13 or 5.14.

This license is to be retained by the licensee and may be used at any time on or after the effective date thereof unless it is revoked. This license is automatically transferred to any related applications(s) filed under 37 CFR 1.53(d). This license is not retroactive.

The grant of a license does not in any way lessen the responsibility of a licensee for the security of the subject matter as imposed by any Government contract or the provisions of existing laws relating to espionage and the national security or the export of technical data. Licensees should apprise themselves of current regulations especially with respect to certain countries, of other agencies, particularly the Office of Defense Trade Controls, Department of State (with respect to Arms, Munitions and Implements of War (22 CFR 121-128)); the Bureau of Industry and Security, Department of Commerce (15 CFR parts 730-774); the Office of Foreign Assets Control, Department of Treasury (31 CFR Parts 500+) and the Department of Energy.

NOT GRANTED

No license under 35 U.S.C. 184 has been granted at this time, if the phrase "IF REQUIRED, FOREIGN FILING LICENSE GRANTED" DOES NOT appear on this form. Applicant may still petition for a license under 37 CFR 5.12, if a license is desired before the expiration of 6 months from the filing date of the application. If 6 months has lapsed from the filing date of this application and the licensee has not received any indication of a secrecy order under 35 U.S.C. 181, the licensee may foreign file the application pursuant to 37 CFR 5.15(b).

UNITED STATES PATENT AND TRADEMARK OFFICE

Commissioner for Patents
United States Patent and Trademark Office
P.O. Box 1450
Alexandria, VA 22313-1450
www.uspto.gov

Banner & Witcoff, LTD.
Ten South Wacker Drive
Suite 3000
Chicago, IL 60606

MAILED

NOV 05 2004

DIRECTOR'S OFFICE
TECHNOLOGY CENTER 3600

In re application of Scott Johnston et al Application No. 10/611,458 Filed: July 1, 2003 For: DERIVATIVES TRADING METHODS THAT USE A VARIABLE ORDER PRICE AND A HEDGE TRANSACTION	: : : : :	**DECISION ON PETITION TO MAKE SPECIAL (ACCELERATED EXAMINATION)**

This is in response to the petition filed on May 17, 2004 to make the above-identified application special on the basis of special examining procedure for certain new applications - accelerated examination as set forth in MPEP § 708.02 VIII.

The requirements for granting special status under this section are: (A) a petition to make special accompanied by the fee set forth in 37 CFR 1.17(h); (B) all claims being directed to a single invention, or an election without traverse if the Office determines that all the claims are not directed to a single invention; (C) a statement that a pre-examination search was made listing the field of search; (D) one copy of each of the references deemed most closely related to the subject matter encompassed by the claims if said references are not already of record; and (E) a detailed discussion of how the claimed subject matter is patentable over the references in accordance with 37 CFR 1.111 (b) and (c).

The petition fails to adequately meet requirement (B), above. In this regard, the petition fails include an election without traverse, or a statement that applicants are willing to elect without traverse should a restriction or election be required.

For the above stated reasons, the petition is **DISMISSED**.

Petitioner is given one more opportunity to perfect the petition. Any request for reconsideration must be filed within TWO MONTHS of the date of this decision. Extensions of time under 37 CFR 1.136(a) are permitted.

Applicant should promptly submit a renewed petition to the Commissioner for Patents, P.O. Box 1450, Alexandria, VA 22313-1450 . The envelope should indicate that the correspondence be brought to the attention of Technology Center 3600.

Until the renewed petition is submitted, the application will be returned to the examiner's docket to await treatment on the merits in the normal order of examination.

Randolph A. Reese
Special Programs Examiner
Technology Center 3600
(703) 308-2121

RAR/rwg: 10/27/04

UNITED STATES PATENT AND TRADEMARK OFFICE

COMMISSIONER FOR PATENTS
UNITED STATES PATENT AND TRADEMARK OFFICE
P.O. BOX 1450
ALEXANDRIA, VA 22313-1450
www.uspto.gov

FEB - 3 2005

MAILED

FEB - 3 2005

OFFICE OF THE DIRECTOR
TC 3600

Banner & Witcoff, LTD.
Ten South Wacker Drive
Suite 3000
Chicago, IL 60606

In re application of Scott Johnston et al Application No. 10/611,458 Filed: July 1, 2003 For: DERIVATIVES TRADING METHODS THAT USE A VARIABLE ORDER PRICE AND A HEDGE TRANSACTION	: : : : :	**DECISION ON PETITION TO MAKE SPECIAL (ACCELERATED EXAMINATION)**

This is in response to the renewed petition filed on December 29, 2004 to make the above-identified application special on the basis of special examining procedure for certain new applications - accelerated examination as set forth in MPEP § 708.02, VIII.

The requirements for granting special status under this section are: (A) a petition to make special accompanied by the fee set forth in 37 CFR 1.17(h); (B) all claims being directed to a single invention, or an election without traverse if the Office determines that all the claims are not directed to a single invention; (C) a statement that a pre-examination search was made listing the field of search; (D) one copy of each of the references deemed most closely related to the subject matter encompassed by the claims if said references are not already of record; and (E) a detailed discussion of how the claimed subject matter is patentable over the references in accordance with 37 CFR 1.111 (b) and (c).

It is noted that copies of the references have been provided. While this does meet the requirement set forth above for the granting of the Petition to Make Special for examination purposes and to be considered the above references should be provided in a submitted IDS.

Since all of the requirements for special status under MPEP § 708.02, VIII have been met, the petition is **GRANTED**.

The examiner is directed (1) to make an interference search for possible interfering applications, (2) to promptly examine this application out of turn, and (3) if any interfering application is discovered, to examine such application simultaneously and state in the first official letter of such application that it is being taken out of turn because of a possible interference.

Petitioner is advised that this application will continue to be special, throughout its entire prosecution and pendency, including interference or appeal, if any, only if petitioner makes a prompt ***bona fide*** effort, in response to each Office action, to place the application in condition for allowance, even if it is necessary to conduct an interview with the examiner to accomplish this purpose.

SUMMARY: Petition to Make Special **GRANTED**.

Kenneth J. Dorner
Special Programs Examiner
Technology Center 3600
(703) 308-0866

KJD/jwk: 01/24/05

UNITED STATES PATENT AND TRADEMARK OFFICE

Commissioner for Patents
United States Patent and Trademark Office
P.O. Box 1450
Alexandria, VA 22313-1450
www.uspto.gov

BANNER & WITCOFF, LTD.
TEN SOUTH WACKER DRIVE, SUITE 3000
CHICAGO, IL 60606

COPY MAILED

JAN 07 2008

OFFICE OF PETITIONS

In re Application of	:	
SALVADORI, et al.	:	
Application No. 10/611,458	:	DECISION GRANTING PETITION
Filed: July 1, 2003	:	UNDER 37 CFR 1.313(c)(2)
Attorney Docket No. **06119.00007**	:	

This is a decision on the petition under 37 CFR 1.313(c)(2), filed January 2, 2008, to withdraw the above-identified application from issue after payment of the issue fee.

The petition is **GRANTED.**

The above-identified application is withdrawn from issue for consideration of a submission under 37 CFR 1.114 (request for continued examination). *See* 37 CFR 1.313(c)(2).

Petitioner is advised that the issue fee paid on November 14, 2007 cannot be refunded. If, however, this application is again allowed, petitioner may request that it be applied towards the issue fee required by the new Notice of Allowance.[1]

Telephone inquiries should be directed to Monica A. Graves at (571) 272-7253.

This application is being referred to Technology Center AU 3691 for processing of the request for continued examination under 37 CFR 1.114 and for consideration of the concurrently filed information disclosure statement.

Karen Creasy

Karen Creasy
Petitions Examiner
Office of Petitions

---

[1] *The request to apply the issue fee to the new Notice may be satisfied by completing and returning the new Part B – Fee(s) Transmittal Form (along with any balance due at the time of submission). Petitioner is advised that the Issue Fee Transmittal Form* ***must*** *be completed and timely submitted to avoid abandonment of the application.*

UNITED STATES PATENT AND TRADEMARK OFFICE

Commissioner for Patents
United States Patent and Trademark Office
P.O. Box 1450
Alexandria, VA 22313-1450
www.uspto.gov

COPY MAILED
NOV 1 6 2006
OFFICE OF PETITIONS

AKIN GUMP STRAUSS HAUER & FELD L.L.P.
ONE COMMERCE SQUARE
2005 MARKET STREET, SUITE 2200
PHILADELPHIA, PA 19103

In re Application of	:	
Brian J. Smyth et al	:	
Application No. 10/611,494	:	DECISION ON PETITION
Filed: June 30, 2003	:	TO MAKE SPECIAL UNDER
Attorney Docket No. 600754-3U1	:	37 CFR 1.102(d)
	:	

This is a decision on the petition under 37 CFR §1.102(d), filed May 25, 2006, to make the above-identified application special based on actual infringement as set forth in M.P.E.P. § 708.02, Section II.

The petition is **GRANTED.**

A grantable petition to make an application special under 37 CFR §1.102(d) and MPEP §708.02, Section II: Infringement, must be accompanied by the required fee pursuant to 37 CFR 1.17(h) and a statement by the applicant, assignee, or attorney/agent registered to practice before the office alleging:

> (A) That there is an infringing device or product actually on the market or method in use;
>
> (B) That a rigid comparison of the alleged infringing device, product, or method with the claims of the application has been made, and that, in his or her opinion, some of the claims are unquestionably infringed; and
>
> (C) That he or she has made or caused to be made a careful and thorough search of the prior art or has a good knowledge of the pertinent prior art.
>
> Applicant must provide one copy of each of the references deemed most closely related to the subject matter encompassed by the claims if said references are not already of record.

The petition complies with all the above stated requirements. Accordingly, the above-identified application has been accorded "special" status.

Telephone inquiries concerning this decision should be directed to Irvin Dingle at 571-272-3210.

All other inquiries concerning either the examination or status of the application should be directed to the Technology Center.

The application is being forwarded to the Technology Center Art Unit 2616 for action on the merits commensurate with this decision.

David Bucci
Petitions Examiner
Office of Petitions

UNITED STATES PATENT AND TRADEMARK OFFICE

Commissioner for Patents
United States Patent and Trademark Office
P.O. Box 1450
Alexandria, VA 22313-1450
www.uspto.gov

MAILED
FROM DIRECTOR'S OFFICE

AUG 2 4 2007

TECHNOLOGY CENTER 3600

AKIN GUMP STRAUSS HAUER & FELD LLP
One Commerce Square
Suite 2200
2005 Market Street
Philadelphia, PA 19103-7013

In re Application of Brian J Smyth et al Application No. 10/611,494 Filed: June 30, 2003 For: METHOD FO CREATING A VIRTUAL TRAFFIC NETWORK	: : : :	PETITION TO ACCEPT COLOR DRAWINGS/PHOTOGRAPHS

This is a decision on applicant's petition under 37 CFR 1.184(A)(2) Filed June 30, 2003 to accept color drawings/photographs.

For the acceptance of color drawings in accordance with 37 CFR 1.184(A)(2), a petition is required which fulfills the following requirements:

(i) The appropriate fee set forth in 1.17(h),
(ii) three (3) sets of color drawings/photographs, and
(iii) amending the specification to contain the following language as the first paragraph in that portion of the specification relating to the brief description of the drawings: "The file of this patent contains at least one drawing executed in color photography. Copies of this patent with color photographs will be provided by the Patent and Trademark Office upon request and payment of necessary fee."

Having met the requirements of 37 CFR 1.184(A)(2), the petition is **GRANTED**.

Any questions or comments with respect to the decision should be forwarded to Supervisory Patent Examiner, Jack Keith at the number listed below.

Jack Keith
Supervisory Patent Examiner
Art Unit 3663
(571) 272-6878

jwk: 8/20/07

UNITED STATES PATENT AND TRADEMARK OFFICE

Commissioner for Patents
United States Patent and Trademark Office
P.O. Box 1450
Alexandria, VA 22313-1450
www.uspto.gov

RICHARD A. FAGIN
P.O. BOX 1247
RICHMOND, TX 77406-1247

COPY MAILED

JUN 1 7 2008

OFFICE OF PETITIONS

In re Patent No. 6,891,376	:	
Issue Date: May 10, 2005	:	
Application No. 10/611,499	:	NOTICE
Filed: July 1, 2003	:	
Attorney Docket No. KJT-03-04	:	

This is a notice regarding your request for acceptance of a fee deficiency submission under 37 CFR 1.28. On September 1, 1998, the Court of Appeals for the Federal Circuit held that 37 CFR 1.28(c) is the sole provision governing the time for correction of the erroneous payment of the issue fee as a small entity. **See DH Technology v. Synergystex International, Inc. 154 F.3d 1333, 47 USPQ2d 1865 (Fed. Cir. Sept. 1, 1998).**

The Office no longer investigates or rejects original or reissue applications under 37 CFR 1.56. **1098 Off. Gaz. Pat. Office 502 (January 3, 1989)**. Therefore, nothing in this Notice is intended to imply that an investigation was done.

Your fee deficiency submission under 37 CFR 1.28 is hereby **ACCEPTED**.

This application is no longer entitled to small entity status. Accordingly, all future fees paid in this application must be paid at the large entity rate.

Inquiries related to this communication should be directed to the April Wise at (571) 272-1642.

Carl Friedman
Petitions Examiner
Office of Petitions

UNITED STATES PATENT AND TRADEMARK OFFICE

UNITED STATES DEPARTMENT OF COMMERCE
United States Patent and Trademark Office
Address: COMMISSIONER FOR PATENTS
P.O. Box 1450
Alexandria, Virginia 22313-1450
www.uspto.gov

BAKER BOTTS L.L.P.
2001 ROSS AVENUE
SUITE 600
DALLAS, TX 75201-2980

Mail Date: 04/20/2010

Applicant	: Patrice R. Calhoun	: DECISION ON REQUEST FOR
Patent Number	: 7643442	: RECALCULATION of PATENT
Issue Date	: 01/05/2010	: TERM ADJUSTMENT IN VIEW
Appliction No	: 10/611,521	: OF WYETH AND NOTICE OF INTENT TO
Filed	: 06/30/2003	: ISSUE CERTIFICATE OF CORRECTION
		:

The Request for Recalculation is **GRANTED** to the extent indicated.

The patent term adjustment has been determined to be **1880** days. The USPTO will *sua sponte* issue a certificate of correction reflecting the amount of PTA days determined by the recalculation.

Prior to the issuance of the certificate of correction, the USPTO will afford patentee an opportunity to be heard and request reconsideration. Accordingly, patentee has **one month or thirty (30) days**, whichever is longer, to file a request for reconsideration of this patent term adjustment calculation. See 35 U.S.C. 154(b)(3)(B)(ii) and 37 CFR 1.322(a)(4). No extensions of time will be granted under 37 CFR 1.136.

Patentee should use document code PET.OP if electronically filing a request for reconsideration of this patent term adjustment calculation. The patentee must also include the information required by 37 CFR 1.705(b)(2) and the fee required by 37 CFR 1.18(e). If patentee does not file a timely request for reconsideration of this patent term adjustment calculation including the information required by 37 CFR 1.705(b)(2) and the fee required by 37 CFR 1.18(e), the USPTO will issue a certificate of correction reflecting the PTA determination noted above.

Patentee should be aware that in order to preserve the right to review in the United States District Court for the District of Columbia of the USPTO patent term adjustment determination, patentee must ensure that he or she also take the steps required under 35 U.S.C. 154(b)(4)(A) in a timely manner. Nothing in the request for recalculation should be construed as providing an alternative time frame for commencing a civil action under 35 U.S.C. 154(b)(4)(A).

Any questions concerning this decision should be directed to the Office of Patent Legal Administration at 571-272-7702.

UNITED STATES PATENT AND TRADEMARK OFFICE

Commissioner for Patents
United States Patent and Trademark Office
P.O. Box 1450
Alexandria, VA 22313-1450
www.uspto.gov

PEPPER HAMILTON LLP
500 GRANT STREET
ONE MELLON BANK CENTER, 50TH FLOOR
PITTSBURGH, PA 15219-2502

COPY MAILED

SEP 25 2007

OFFICE OF PETITIONS

In re Application of	:	
Waldman et al.	:	
Application No. 10/611,533	:	ON PETITION
Filed: June 30, 2003	:	
Attorney Docket No. 100051.11211	:	

This is a decision on the petition under 37 C.F.R. § 1.137(b), filed August 24, 2007, to revive the above-identified application.

The petition is **GRANTED.**

The petition satisfies the conditions for revival pursuant to the provisions of 37 CFR 1.137(b) in that (1) the reply in the form of an Amendment; (2) the petition fee; and (3) the required statement of unintentional delay have been received. Accordingly, the response has been accepted as having been unintentionally delayed.

An extension of time under 37 CFR 1.136 must be filed prior to the expiration of the maximum extendable period for reply. See In re Application of S., 8 USPQ2d 1630, 1631 (Comm'r Pats. 1988). Accordingly, since the $510.00 extension of time fee submitted with the petition on August 24, 2007, was subsequent to the maximum extendable period for reply, this fee is unnecessary and will be credited to petitioner's deposit account as authorized.

This matter is being referred to Technology Center 1600 for further examination on the merits.

Telephone inquiries regarding this decision should be directed to the undersigned at (571) 272-3206.

Liana Walsh
Petitions Examiner
Office of Petitions

UNITED STATES PATENT AND TRADEMARK OFFICE

COMMISSIONER FOR PATENTS
UNITED STATES PATENT AND TRADEMARK OFFICE
P.O. BOX 1450
ALEXANDRIA, VA 22313-1450
www.uspto.gov

Fish & Neave LLP
1251 Avenue of the Americas
50th Floor
New York, NY 10020-1150

MAILED

NOV 19 2004

DIRECTOR'S OFFICE
TECHNOLOGY CENTER 3600

In re application of :
Jeremy Mark Holland et al. :
Application No. 10/611,540 :
Filed: June 30, 2003 :
For: SYSTEMS AND METHODS FOR PROVIDING INTERNET ACCESSIBLE REGISTRIES :

DECISION ON REQUEST FOR WITHDRAWAL OF ATTORNEY

This is a decision on the request filed on June 18, 2004 under 37 CFR 1.36 and MPEP 402.06, requesting permission to withdraw as the attorney of record in the above-identified application.

The request is **NOT APPROVED as MOOT**.

Under 37 CFR 1.36 an attorney may withdraw only upon application to and approval by the Commissioner. It should be noted that a withdrawal is effective when approved, not when filed. Besides giving due notice to his or her client and delivering to the client all papers and property to which the client is entitled as specified under 37 CFR 10.40, approval of such a request requires that the following conditions be met:

A) Each attorney of record must sign the notice of withdrawal, or the notice must contain a clear indication of one attorney signing on behalf of another, because the Office does not recognize law firms;

B) A proper reason for the withdrawal as enumerated in 37 CFR 10.40(b) or subsection (1)-(6) of 37 CFR 10.40(c) must be provided; and

C) If withdrawal is requested in accordance with 37 CFR 10.40(c) above, there must be at least 30 days between approval of the withdrawal and the later of the expiration date of a time period for reply or the expiration date of the period which can be obtained by a petition and fee for extension of time under 37 CFR 1.136(a).

The request to withdraw as attorney in the above-identified application is not approved as moot because the power of attorney has already been withdrawn as per the Notice to that effect mailed August 2, 2004. As a result of this Notice, the power of attorney has been granted to the practitioners at the address noted above.

Randolph A. Reese
Special Programs Examiner
Patent Technology Center 3600
(703) 308-2121

RAR/vdb: 10/26/04

cc:

Jones Day
222 East 41st ST
New York, NY 10017

UNITED STATES PATENT AND TRADEMARK OFFICE

Commissioner for Patents
United States Patent and Trademark Office
P.O. Box 1450
Alexandria, VA 22313-1450
www.uspto.gov

WILLIAM COLLARD
COLLARD & ROE, P.C.
1077 NORTHERN BOULEVARD
ROSLYN, NY 11576

COPY MAILED
OCT 13 2006
OFFICE OF PETITIONS

In re Application of	:	
Christopher Sellars	:	
Application No. 10/611,553	:	ON PETITION
Filed: June 30, 2003	:	
Attorney Docket No. SELLARS-3 CIP	:	

This is a decision on the petition under 37 CFR 1.137(b), filed August 10, 2006, to revive the above-identified application.

The petition is **GRANTED**.

Telephone inquiries concerning this decision should be directed to Irvin Dingle at (571) 272-3210.

This matter is being referred to Technology Center AU 3727 for further processing.

Irvin Dingle
Petitions Examiner
Office of Petitions

UNITED STATES PATENT AND TRADEMARK OFFICE

Commissioner for Patents
United States Patent and Trademark Office
P.O. Box 1450
Alexandria, VA 22313-1450
www.uspto.gov

HEWLETT-PACKARD COMPANY
INTELLECTUAL PROPERTY ADMINISTRATION
P.O. BOX 272400
FORT COLLINS CO 80527-2400

COPY MAILED

FEB 28 2008

OFFICE OF PETITIONS

In re Application of
Daniel V. Zilavy
Application No. 10/611,558
Filed: July 1, 2003
Attorney Docket No.: **200208005-1**

ON PETITION

This is a decision on the petition filed December 21, 2007 under 37 CFR 1.137(b), [1] to revive the above-identified application.

The petition is **GRANTED**.

This application became abandoned for failure to timely reply to the non-Final Office Action mailed May 16, 2007. A shortened statutory period of three months was set for replying to the non-Final Office Action. No extensions of time having been requested, this application became abandoned August 17, 2007. The instant petition and this decision precede the mailing of the Notice of Abandonment.

This matter is being referred to Technology Center 2192 for appropriate action on the amendment filed December 21, 2007.

Telephone inquiries concerning this matter should be directed to the undersigned Petitions Attorney at (571) 272-3212.

Patricia Faison-Ball
Senior Petitions Attorney
Office of Petitions

---

[1] Effective December 1, 1997, the provisions of 37 CFR 1.137(b) now provide that where the delay in reply was unintentional, a petition may be filed to revive an abandoned application or a lapsed patent pursuant to 37 CFR 1.137(b). A grantable petition filed under the provisions of 37 CFR 1.137(b) must be accompanied by:

(1) the required reply, unless previously filed. In a nonprovisional application abandoned for failure to prosecute, the required reply may be met by the filing of a continuing application. In a nonprovisional application filed on or after June 8, 1995, and abandoned for failure to prosecute, the required reply may also be met by the filing of a request for continued examination in compliance with § 1.114. In an application or patent, abandoned or lapsed for failure to pay the issue fee or any portion thereof, the required reply must be the payment of the issue fee or any outstanding balance thereof. In an application abandoned for failure to pay the publication fee, the required reply must include payment of the publication fee.

(2) the petition fee as set forth in 37 CFR 1.17(m);

(3) a statement that the entire delay in filing the required reply from the due date for the reply until the filing of a grantable petition pursuant to 37 CFR 1.137(b) was unintentional. The Commissioner may required additional information where there is a question whether the delay was unintentional; and

(4) any terminal disclaimer (and fee as set forth in 37 CFR 1.20(d)) required pursuant to 37 CFR 1.137(c)).

UNITED STATES PATENT AND TRADEMARK OFFICE

COMMISSIONER FOR PATENTS
UNITED STATES PATENT AND TRADEMARK OFFICE
P.O. BOX 1450
ALEXANDRIA, VA 22313-1450
www.uspto.gov

SNELL & WILMER
ONE ARIZONA CENTER
400 EAST VAN BUREN
PHOENIX AZ 85004-0001

COPY MAILED

APR 1 9 2004

OFFICE OF PETITIONS

In re Application of
Michael J. Berardi et al.
Reissue Application No. 10/611,563
Filed: June 30, 2003
Attorney Docket No. 60655.0100

DECISION ACCORDING STATUS
UNDER 37 CFR 1.47(a)

This is in response to the petition under 37 CFR 1.47(a), filed March 1, 2003 and supplemented on March 3, 2003.

The petition is GRANTED.

The above-identified application was filed on June 30, 2003, without an executed oath or declaration and naming Berardi, Bliman, Bonalle, Elwood, Vander Eyk, Hood, Isenberg, Malnati, Mayers, Mueller, Norcross, Saunders, Scheding, Shahl, Skilling-Belmond and Williamson as joint inventors.

Accordingly, on September 26, 2003, a "Notice To File Missing Parts of Application" was mailed, requiring an executed oath or declaration and a surcharge for its late filing. A two month period for reply was set.

In response, on February 26, 2004 (certificate of mail date) and February 27, 2004(certificate of mail date), a petition under 37 CFR 1.47(a) was filed with the last known address of Alexandra Mayers, petition fee and surcharge, a declaration signed by all of the joint inventors except Alexandra Mayers and a petition for a three month extension of time. Additionally, a declaration by Patrick L. Mixon, Attorney of Record, and a statement by Patrice Jacobson, Senior Legal Manager with American Express, the assignee, regarding the efforts enlisted to have Ms. Mayers execute the oath or declaration and copies of an E-mail from Ms. Mayers expressly refusing to execute the oath or declaration and thus to cooperation with the filing of the instant application was submitted.

The applicant files this petition alleging that joint inventor Alexandra Mayers refuses to sign the oath/declaration and seeks status under 37 CFR 1.47(a).

A grantable petition under 37 CFR 1.47(a) requires: (1) proof that the non-signing inventor cannot be reached or refuses to sign the oath or declaration after having been presented with the application papers (specification, claims and drawings); (2) an acceptable oath or declaration in compliance with 35 U.S.C. §§ 115 and 116; (3) the petition fee; and (4) a statement of the last known address of the non-signing inventor.

The above-identified application and papers have been reviewed and found in compliance with 37 CFR 1.47(a). In view thereof, this application is hereby accorded Rule 1.47(a) status.

Thus, as provided in Rule 1.47(c), this Office will forward notice of this application's filing to the non-signing inventors at the address given in the petition. Notice of the filing of this application will also be published in the Official Gazette.

The application is being forwarded to Technology Center 2600 for examination in due course.

Telephone inquiries related to this decision should be directed to the undersigned Petitions Attorney at (703) 305-4497.

Patricia Faison-Ball

Patricia Faison-Ball
Senior Petitions Attorney
Office of Petitions

UNITED STATES PATENT AND TRADEMARK OFFICE

COMMISSIONER FOR PATENTS
UNITED STATES PATENT AND TRADEMARK OFFICE
P.O. BOX 1450
ALEXANDRIA, VA 22313-1450
www.uspto.gov

COPY MAILED

APR 1 9 2004

OFFICE OF PETITIONS

ALEXANDRA MAYERS
49 GROVE STREET
APT. 5A
NEW YORK, NEW YORK 10014

In re Application of
Michael J. Berardi et al.
Application No. 10/611,563
Filed: June 30, 2003
For: TRANSPARENT TRANSACTION CARD

Dear Ms. Mayers:

You are named as a joint inventor in the above identified United States patent application, filed under the provisions of 35 U.S.C. 116 (United States Code), and 37 CFR 1.47(a), Rules of Practice in Patent Cases. Should a patent be granted on the application you will be designated therein as a joint inventor.

As a named inventor you are entitled to inspect any paper in the file wrapper of the application, order copies of all or any part thereof (at a prepaid cost per 37 CFR 1.19) or make your position of record in the application. Alternatively, you may arrange to do any of the preceding through a registered patent attorney or agent presenting written authorization from you. If you care to join the application, counsel of record (see below) would presumably assist you. Joining in the application would entail the filing of an appropriate oath or declaration by you pursuant to 37 CFR 1.63.

Telephone inquiries regarding this communication should be directed to the undersigned Petitions Attorney at (703) 305-4497. Requests for information regarding your application should be directed to the File Information Unit at 703/308-2733. Information regarding how to pay for and order a copy of the application, or a specific paper in the application, should be directed to Certification Division at 703/308-9726 or 1-800-972-6382 (outside the Washington D.C. area).

Patricia Faison-Ball

Patricia Faison-Ball
Senior Petitions Attorney
Office of Petitions

cc:
SNELL & WILMER
ONE ARIZONA CENTER
400 EAST VAN BUREN
PHOENIX AZ 85004-0001

UNITED STATES PATENT AND TRADEMARK OFFICE

Commissioner for Patents
United States Patent and Trademark Office
P.O. Box 1450
Alexandria, VA 22313-1450
www.uspto.gov

JONATHAN A. PLATT
RENNER, OTTO, BOISSELLE & SKLAR, LLP
19TH FLOOR
1621 EUCLID AVE.
CLEVELAND, OH 44115

COPY MAILED
MAR 1 8 2005
OFFICE OF PETITIONS

In re Application of	:	
Franco D'Alessandro	:	
Application No. 10/611,574	:	ON PETITION
Filed: July 1, 2003	:	
Attorney Docket No. ERICP0343US	:	

This is a decision on the petition under 37 CFR 1.53 filed February 22, 2005, requesting that the above-identified application be accorded a filing date of July 1, 2003, including three (3) sheets of drawings.

The application was submitted on July 1, 2003. However, on December 30, 2004, the Office of Initial Patent Examination (OIPE) mailed a "Notice Of Incomplete Nonprovisional Application" (Notice) that stated the application had not been accorded a filing date, and that the application was deposited without drawings.

In response, on February 22, 2005, the instant petition was submitted. Petitioner argues that three (3) sheets of drawings were filed on July 1, 2003. In support, the instant petition is accompanied by a copy of applicant's postcard receipt that acknowledges receipt of "3 sheets of Drawings" on July 1, 2003. A review of the application file indicates the presence of zero (0) sheets of drawings filed on July 1, 2003. It is assumed that missing sheets of drawings were misplaced by the Office.

In view of the above, the petition is granted.

The $400.00 petition fee will be refunded to deposit account no. 18-0988.

This application will be returned to OIPE for further processing with a filing date of July 1, 2003, using the three (3) sheets of drawings, supplied on February 22, 2005.

Telephone inquiries concerning this matter may be directed to the undersigned at (571)272-3228.

Edward J. Tannouse
Petitions Attorney
Office of Petitions
United States Patent and Trademark Office

DATE 8/29/07 APPLICATION NUMBER 10611576

DOC CODE PET.DEC.TC DOC DATE 8/29/07

DELIVER THE ATTACHED FIFLE/DOCUMENT TO THE TC SCANNING CENTER

CONTRACTOR: THE ATTACHED FILE/DOCUMENT MUST BE INDEXED AND SCANNED INTO IFW WITHIN **8** WORK HOURS; UPLOADING OF THE SCANNED IMAGES SHOULD OCCUR NO LATER THAN **16** WORK HOURS FOLLOWING RECEIPT OF THIS REQUEST

AFTER SCANNING, ORIGINAL DOCUMENTS SHOULD BE BOXED IN ACCORDANCE WITH INSTRUCTIONS

UNITED STATES PATENT AND TRADEMARK OFFICE

COMMISSIONER FOR PATENTS
UNITED STATES PATENT AND TRADEMARK OFFICE
P.O. BOX 1450
ALEXANDRIA, VA 22313-1450
www.uspto.gov
DIW Aug-07

MCDONNELL BOEHNEN HULBERT & BERGHOFF LLP
300 S. WACKER DRIVE
32ND FLOOR
CHICAGO IL 60606

COPY MAILED

AUG 29 2007

OFFICE OF PETITIONS

In re Application of	:	
Wayne L. Stockland	:	
Application Number: 10/611576	:	DECISION ON PETITION
Filing Date: 06/30/2003	:	
Attorney Docket Number: 01-1685-A	:	

This is a decision on the petition filed on 6 July, 2007, under 37 CFR 1.137(b),[1] to revive the above-identified application.

The petition is **GRANTED**.

The application became abandoned on 30 December, 2006, for failure to properly respond to the final Office action mailed on 29 September, 2006, which set a three (3) month shortened statutory period for reply. No extensions of the time for reply under 37 CFR 1.136(a) were obtained. On 28 December, 2006, an amendment after final rejection was filed. However, the amendment failed to place the application in condition for

---

[1] Effective December 1, 1997, the provisions of 37 CFR 1.137(b) now provide that where the delay in reply was unintentional, a petition may be filed to revive an abandoned application or a lapsed patent pursuant to 37 CFR 1.137(b). A grantable petition filed under the provisions of 37 CFR 1.137(b) must be accompanied by:

(1) the required reply, unless previously filed. In a nonprovisional application abandoned for failure to prosecute, the required reply may be met by the filing of a continuing application. In a nonprovisional utility or plant application filed on or after June 8, 1995, and abandoned for failure to prosecute, the required reply may also be met by the filing of a request for continuing examination in compliance with § 1.114. In an application or patent, abandoned or lapsed for failure to pay the issue fee or any portion thereof, the required reply must be the payment of the issue fee or any outstanding balance thereof. In an application, abandoned for failure to pay the publication fee, the required reply must include payment of the publication fee.

(2) the petition fee as set forth in 37 CFR 1.17(m);

(3) a statement that the entire delay in filing the required reply from the due date for the reply until the filing of a grantable petition pursuant to 37 CFR 1.137(b) was unintentional. The Commissioner may required additional information where there is a question whether the delay was unintentional; and

(4) any terminal disclaimer (and fee as set forth in 37 CFR 1.20(d)) required pursuant to 37 CFR 1.137(c)).

allowance, and an Advisory Action was mailed on 22 January, 2007. The filing of the present petition precedes the mailing of Notice of Abandonment.

Petitioner has filed a Request for Continued Examination and an amendment as the submission required under 37 CFR 1.114.

This application is being referred to Technology Center Art Unit 1761 for further processing.

Telephone inquiries concerning this matter may be directed to the undersigned at (571) 272-3231.

D Wood

Douglas I. Wood
Senior Petitions Attorney
Office of Petitions

1733

UNITED STATES PATENT AND TRADEMARK OFFICE

COMMISSIONER FOR PATENTS
UNITED STATES PATENT AND TRADEMARK OFFICE
P.O. BOX 1450
ALEXANDRIA, VA 22313-1450
www.uspto.gov

RECEIVED
JAN 26 2004
TC 1700

ALIX YALE & RISTAS LP
750 MAIN STREET SUITE 1400
HARTFORD CT 06103-2721

COPY MAILED
JAN 06 2004
OFFICE OF PETITIONS

In re Application of
West
Application No. 10/611,581
Filed: June 30, 2003
Attorney Docket No. CREATK/101/US

DECISION GRANTING PETITION
UNDER 37 CFR 1.10(d)

This is a decision on the petition filed October 17, 2003, under 37 CFR 1.10(d), requesting that the above-identified non provisional application be accorded a filing date of June 30, 2003, rather than the presently accorded filing date of July 1, 2003.

The petition is **granted.**

Petitioner has met the requirements of 37 1.10(d) including the corroborative showing required by 37 CFR 1.10(d)(3), which establishes that the instant application papers were deposited with the USPS under its Express Mail Post Office to Addressee Service prior to the last scheduled pick up on June 30, 2003. As such, the instant application papers are considered to have been filed with the USPTO on June 30, 2003. See 37 CFR 1.10(a).

Accordingly, on petition, and for the reasons aptly advanced by petitioner, the requested filing date can be granted.

OIPE is instructed to further process this application as a non provisional application with a filing date of June 30, 2003.

Telephone inquiries concerning this decision may be directed to the undersigned at (703) 305-1820. Telephone inquiries related to OIPE processing should be directed to the OIPE hotline at (703) 308-1202.

Brian Hearn
Petitions Examiner
Office of Petitions
Office of the Deputy Commissioner
for Patent Examination Policy

RECEIVED
JAN 21 2004
TECHNOLOGY CENTER 2800

UNITED STATES PATENT AND TRADEMARK OFFICE

Commissioner for Patents
United States Patent and Trademark Office
P.O. Box 1450
Alexandria, VA 22313-1450
www.uspto.gov

David C. Ripma
Sharp Laboratories of America, Inc.
5750 NW Pacific Rim Boulevard
Camas WA 97202

COPY MAILED
SEP 0 9 2008

In re Application of	:	
Tommy Lee Oswald	:	
Application No. 10/611,592	:	DECISION ON PETITION
Filed: June 30, 2003	:	
Attorney Docket No. SLA.1272	:	

This is a decision on the petition under the unintentional provisions of 37 CFR 1.137(b), filed November 20, 2007, to revive the above-identified application.

The petition is **GRANTED**.

This application became abandoned for failure to timely pay the issue and publication fees on or before October 17, 2007, as required by the Notice of Allowance and Fee(s) Due, mailed July 17, 2007. Accordingly, the date of abandonment of this application is October 18, 2007. The Notice of Abandonment was mailed November 9, 2007.

The petition satisfies the requirements of 37 CFR 1.137(b) in that petitioner has supplied (1) the reply in the form of payment of the issue fee of $1,440 and the publication fee of $300, (2) the petition fee of $1,540; and (3) a proper statement of unintentional delay.

Telephone inquiries concerning this decision should be directed to Terri Williams at (571) 272-2991.

This application is being referred to the Office of Data Management for processing into a patent.

Chris Bottorff
Petitions Examiner
Office of Petitions

UNITED STATES PATENT AND TRADEMARK OFFICE

Commissioner for Patents
United States Patent and Trademark Office
P.O. Box 1450
Alexandria, VA 22313-1450
www.uspto.gov

TOWNSEND AND TOWNSEND AND CREW, LLP
TWO EMBARCADERO CENTER
EIGHTH FLOOR
SAN FRANCISCO CA 94111-3834

COPY MAILED
AUG 24 2006
OFFICE OF PETITIONS

In re Application of	:	
Van Bree, et al.	:	
Application No. 10/611,598	:	DECISION ON PETITION
Filed: June 30, 2003	:	TO WITHDRAW
Attorney Docket No. 16994-G-012730US	:	FROM RECORD
	:	

This is a decision on the Request to Withdraw as attorney or agent of record under 37 C.F.R. § 1.36(b), filed May 3, 2006.

The request is **APPROVED**.

A grantable request to withdraw as attorney/agent of record must be signed by every attorney/agent seeking to withdraw or contain a clear indication that one attorney is signing on behalf of another/others. A request to withdraw will not be approved unless at least 30 (thirty) days would remain between the date of approval and the later of the expiration date of a time to file a response or the expiration date of the maximum time period which can be extended under 37 C.F.R. § 1.136(a).

The request was signed by Joe Liebeschuetz on behalf of all attorneys of record who are associated with customer No. 20350.

All attorneys/agents associated with the Customer Number 20350 have been withdrawn.

Applicant is reminded that there is no attorney of record at this time.

The request to change the correspondence of record is not acceptable as the requested correspondence address is not that of: (1) the first named signing inventor; or (2) an intervening assignee of the entire interest under 37 C.F.R 3.71. All future communications from the Office will be directed to the first named signing inventor at the first copied address below until otherwise properly notified by the applicant.

Telephone inquiries concerning this decision should be directed to April Wise at 571-272-1642.

April M. Wise
Petitions Examiner
Office of Petitions

cc: Johannes B.M.M. Van Bree
Dotterbloemstraat 27,21253 ES
Nieuw-Vennep
Netherlands

cc: HAMILTON, BROOK, SMITH & REYNOLDS, P.C.
530 VIRGINIA ROAD
P.O. BOX 9133
CONCORD, MA 01742-9133

SPE RESPONSE FOR CERTIFICATE OF CORRECTION

Paper No.: X

DATE : June 04, 2008

TO SPE OF : ART UNIT 1651

SUBJECT : Request for Certificate of Correction for Appl. No.: 10/611598 Patent No.: 7351410 B2

A response is requested with respect to a request for a certificate of correction.

With respect to the change(s) requested to correct Office and/or Applicant's errors, should the patent read as shown in the certificate of correction attached herewith or the COCIN document(s), in IFW images for the above-identified patented application? No new matter should be introduced, nor should the scope or meaning of the claims be changed.

If the response is for an IFW, within **7** days, please complete and forward the response, to the employee (named below) via scanning into application images, using document code **COCX**.

DO NOT SENT TO ATTORNEY

If the response is for a paper file wrapper, please complete the response and forward the response with the paper file wrapper, to the employee (named below), within **7** days, to:

Certificates of Correction Branch (CofC)
South Tower - 9A22
Palm Location 7580

You can fax the Directors/SPE response to 571-270-9990

LAMONTE NEWSOME
Certificates of Correction Branch
703-308-9390 ext. 112

Thank You For Your Assistance

The request for issuing the above-identified correction(s) is hereby:
Note your decision on the appropriate box.

■ **Approved**	**All** changes apply.
☐ **Approved in Part**	Specify below which changes **do not** apply.
☐ **Denied**	State the reasons for denial below.

Comments: _____

/Michael G. Wityshyn/
SPE

1651
Art Unit

UNITED STATES PATENT AND TRADEMARK OFFICE

Commissioner for Patents
United States Patent and Trademark Office
P.O. Box 1450
Alexandria, VA 22313-1450
www.uspto.gov

RICK D. NYDEGGER
WORKMAN, NYDEGGER & SEELEY
1000 EAGLE GATE TOWER
60 EAST SOUTH TEMPLE
SALT LAKE CITY UT 84111

COPY MAILED

MAR 30 2009

OFFICE OF PETITIONS

In re Patent No. 6,889,158 :
Issue Date: 3 May, 2005 :
Application No. 10/611,613 : DECISION
Filed: 30 June, 2003 :
Attorney Docket No. 13768.410

This is a decision on the petition filed on 17 February, 2009, requesting issuance of duplicate Letters Patent for the above-identified patent/application, and considered pursuant to 37 C.F.R. §1.182.

NOTE: *The address on the petition is different than that of record.*

If Petitioner desires to receive future correspondence regarding this application, the appropriate Notice must be submitted.

A courtesy copy of this decision will be mailed to Petitioner.

However, all future correspondence will be directed to the address of record until such time as appropriate instructions are received to the contrary.

The petition is **GRANTED.**

BACKGROUND

Petitioner Danielle Johnston Holmes (Reg. No 39,720) has made demand upon the Office to issue duplicate Letters Patent in the instant matter.

Petitioner has declared that the letters patent apparently were lost.

Petitioner has demonstrated that the petition fee has been paid as required for the petition under 37 C.F.R. §1.182.

Out of an abundance of caution, Petitioners always are reminded that that those registered to practice and all others who make representations before the Office are reminded to inquire into the underlying facts of representations made to the Office and support averments with the appropriate documentation–since all owe to the Office the continuing duty to disclose.[1]

The availability of applications and application papers online to applicants/practitioners who diligently associate their Customer Number with the respective application(s) now provides an applicant/practitioner on-demand information as to events/transactions in an application.

The Publishing Division is directed to issue duplicate Letters Patent.

A copy of this decision is being forwarded to Publishing Division for issuance of duplicate Letters Patent.

The file is being released to the IFW Repository.

Any questions regarding the issuance of the duplicate Letters Patent should be directed to Ms. Niomi Farmer, Office of Data Management, Office: 703-308-9250x119, Fax: 571-270-9753.

[1] See supplement of 17 June, 1999. The Patent and Trademark Office is relying on Petitioner's duty of candor and good faith and accepting a statement made by Petitioner. See Changes to Patent Practice and Procedure, 62 Fed. Reg. at 53160 and 53178, 1203 Off. Gaz. Pat. Office at 88 and 103 (responses to comments 64 and 109)(applicant obligated under 37 C.F.R. §10.18 to inquire into the underlying facts and circumstances when providing statements to the Patent and Trademark Office).

Patent No. 6,889,158
Application No. 10/611,613

Telephone inquiries regarding this decision may be directed to the undersigned at (571) 272-3214—it is noted, however, that all practice before the Office is in writing (see: 37 C.F.R. §1.2[2]) and the proper authority for action on any matter in this regard are the statutes (35 U.S.C.), regulations (37 C.F.R.) and the commentary on policy (MPEP). Therefore, no telephone discussion may be controlling or considered authority for Petitioner's action(s).

/John J. Gillon, Jr./
John J. Gillon, Jr.
Senior Attorney
Office of Petitions

cc: Ms. Niomi Farmer, ST/8C23 FAX: (571) 270-9753

DANIELLE JOHNSTON HOLMES
MICROSOFT CORPORATION
ONE MICROSOFT WAY
REDMOND, WA 98052

[2] The regulations at 37.C.F.R. §1.2 provide:
§1.2 Business to be transacted in writing.
All business with the Patent and Trademark Office should be transacted in writing. The personal attendance of applicants or their attorneys or agents at the Patent and Trademark Office is unnecessary. The action of the Patent and Trademark Office will be based exclusively on the written record in the Office. No attention will be paid to any alleged oral promise, stipulation, or understanding in relation to which there is disagreement or doubt.

UNITED STATES PATENT AND TRADEMARK OFFICE

COMMISSIONER FOR PATENTS
UNITED STATES PATENT AND TRADEMARK OFFICE
P.O. BOX 1450
ALEXANDRIA, VA 22313-1450
www.uspto.gov

MAX STUL OPPENHEIMER
P.O. BOX 50
STEVENSON, MD 21153

COPY MAILED

APR 20 2005

OFFICE OF PETITIONS

ON PETITION

In re Application of :
Andres Salazar :
Application No. 10/611,614 :
Filed: July 1, 2003 :
Title of Invention: :
METHOD FOR PREPARATION OF :
LARGE VOLUME BATCHES OF POLY- :
ICLC WITH INCREASED BIOLOGICAL :
POTENCY THERAPEUTIC, CLINICAL :
AND VETERINARY USES THEREOF :

This is a decision on the Request to Withdraw Holding of Abandonment, filed March 28, 2005. The petition is properly treated under 37 CFR 1.181.

The petition is **granted.**

The above-identified application became abandoned for failure to reply in a timely manner to the non-final Office action, mailed March 8, 2004. The Office action set a three (3) month period for reply, and provided for extensions of time under 37 CFR 1.136(a). No reply having been received, the application became abandoned on June 9, 2004. A Notice of Abandonment was mailed on September 24, 2004.

Applicant's Assertion

Applicant responds with the instant petition wherein Applicant avers that a timely reply was filed on September 4, 2004, and was received by this Office as evidenced by Applicant's return-receipt postcard. In support of this assertion, Applicant provides a copy of a return-receipt postcard acknowledging receipt of, *inter alia*, a Response to [the] Restriction Requirement; Certificate of Mailing; Petition for Extension of Time, and Authorization to Charge Deposit Account, in the above-identified application by this Office on September 9, 2004.

A review of the return-receipt postcard reveals that Applicant is correct. The postcard acknowledges receipt of, inter alia, a

Response to [the] Restriction Requirement; Certificate of Mailing; Petition for Extension of Time, and Authorization to Charge Deposit Account in the above-identified application by this Office on September 9, 2004.

"A postcard receipt which itemizes and properly identifies the papers which are being filed serves as prima facie evidence of receipt in the PTO of all items listed thereon by the PTO." MPEP § 503.

Accordingly, the petition is granted.

The copy of the Response to Restriction Requirement, filed with the instant petition on March 28, 2005, will be used for examination purposes.

A refund of the petition fee has been credited to deposit account 15-0620, as requested in the instant petition.

In view of the foregoing, the holding of abandonment is hereby withdrawn.

The application file is being referred to Technology Center Art Unit 1623 for continued processing in due course.

Telephone inquiries concerning this decision should be directed to the undersigned at 571-272-3232.

Derek L. Woods
Attorney
Office of Petitions

UNITED STATES PATENT AND TRADEMARK OFFICE

Commissioner for Patents
United States Patent and Trademark Office
P.O. Box 1450
Alexandria, VA 22313-1450
www.uspto.gov

COPY MAILED

JUN 0 4 2008

OFFICE OF PETITIONS

FULBRIGHT & JAWORSKI, LLP
666 FIFTH AVE
NEW YORK, NY 10103-3198

In re Application of	:	
Chris Rundfeldt et al	:	
Application No. 10/611,649	:	ON PETITION
Filed: July 1, 2003	:	
Attorney Docket No. NY-HUBR 1221-US	:	

This is a decision on the petition under the unintentional provisions of 37 CFR 1.137(b), filed February 4, 2008, to revive the above-identified application.

The petition is **GRANTED**.

The application became abandoned for failure to timely file a reply within the meaning of 37 CFR 1.113 to the final Office action of July 23, 2007. The proposed reply required for consideration of a petition to revive must be a Notice of Appeal (and appeal fee required by 37 CFR 41.20(b)(2), an amendment that *prima facie* places the application in condition for allowance, a Request for Continued Examination and submission (37 CFR 1.114), or the filing of a continuing application under 37 CFR 1.53(b). See MPEP 711.03(c)(III)(A)(2). No extension of time pursuant to the provisions of 37 CFR 1.136(a) was obtained. Accordingly, the date of abandonment of this application is October 24, 2007.

The petition satisfies the requirements of 37 CFR 1.137(b) in that petitioner has supplied (1) the reply in the form of a Request for Continued Examination (RCE) and fee of $810 and the submission required by 37 CFR 1.114; (2) the petition fee of $1540; and (3) a proper statement of unintentional delay.

Telephone inquiries concerning this decision should be directed to the undersigned at (571) 272-3210.

This application is being referred to Technology Center AU 1617 for processing of the RCE and for appropriate action by the Examiner in the normal course of business on the amendment submitted in accordance with 37 CFR 1.114.

Irvin Dingle
Petition Examiner
Office of Petitions

UNITED STATES PATENT AND TRADEMARK OFFICE

Commissioner for Patents
United States Patent and Trademark Office
P.O. Box 1450
Alexandria, VA 22313-1450
www.uspto.gov

MORGAN LEWIS & BOCKIUS LLP
1111 PENNSYLVANIA AVENUE NW
WASHINGTON, DC 20004

COPY MAILED
SEP 26 2008

In re Patent No. 7,117,703	:	
Issue Date: October 10, 2006	:	
Application No. 10/611,664	:	NOTICE
Filed: July 2, 2003	:	
Attorney Docket No. 049400-5025	:	

This is a notice regarding your request for acceptance of a fee deficiency submission under 37 CFR 1.28.

The Office no longer investigates or rejects original or reissue patent under 37 CFR 1.56. **1098 Off. Gaz. Pat. Office 502 (January 3, 1989)**. Therefore, nothing in this Notice is intended to imply that an investigation was done.

Your fee deficiency submission under 37 CFR 1.28 is hereby **ACCEPTED**.

This patent is no longer entitled to small entity status. Accordingly, all future fees paid in this patent must be paid at the large entity rate.

Inquiries related to this communication should be directed to the undersigned at (571) 272-6059.

Alicia Kelley
Petitions Examiner
Office of Petitions

UNITED STATES PATENT AND TRADEMARK OFFICE

Commissioner for Patents
United States Patent and Trademark Office
P.O. Box 1450
Alexandria, VA 22313-1450
www.uspto.gov

FISH & RICHARDSON P.C.
PO BOX 1022
MINNEAPOLIS MN 55440-1022

COPY MAILED

SEP 16 2008

OFFICE OF PETITIONS

In re Application of
Christopher R. ULIK et al.
Application No. 10/611,666
Filed: June 30, 2003
Attorney Docket No. **16113-1306001**

DECISION ON PETITION

This is a decision on the petition under the unintentional provisions of 37 CFR 1.137(b), filed July 01, 2008 to revive the above-identified application, which, for the reasons stated below, is being treated as a request for a three (3)- month extension of time.

The request for a three (3)-month extension of time is **GRANTED**.

The record shows that a Non-Final Office action was mailed on July 5, 2007, which set a three (3) month shortened statutory period for reply. Accordingly, a reply was due on or before October 5, 2007, or on or before January 7, 2008 (since January 5, 2008 fell on a Saturday) with the submission of a three-month extension of time fee pursuant to the provisions of 37 CFR 1.136(a). A response to the Non-Final Office action was filed January 28, 2008 with a certificate of mailing dated January 7, 2008. Since petitioner may obtain an extension of time up to an including three months, this case is not in fact abandoned. Accordingly, the filing of a petition to revive is inappropriate until the maximum extendable period for reply has expired.

In view of the above, the $1,540 petition fee submitted will be refunded to petitioner's Deposit Account 06 - 1050 in due course.

The application file does not indicate a change of address has been filed in this case, although the address given on the petition differs from the address of record. A change of address should be filed in this case in accordance with MPEP 601.03. A courtesy copy of this decision is being mailed to the address noted on the petition. However, until otherwise instructed, all future correspondence regarding this application will be mailed solely to the address of record.

Telephone inquiries concerning this decision should be directed to Tredelle Jackson at (571) 272-2783.

This application is being referred to Technology Center AU 2625 for appropriate action on the concurrently filed amendment.

Ramesh Krishnamurthy
Petitions Examiner
Office of Petitions

cc: **FISH & RICHARDSON P.C.**
ONE CONGRESS PLAZA, SUITE 810
111 CONGRESS AVENUE
AUSTIN TX 78701

UNITED STATES PATENT AND TRADEMARK OFFICE

UNITED STATES DEPARTMENT OF COMMERCE
United States Patent and Trademark Office
Address: COMMISSIONER FOR PATENTS
P.O. Box 1450
Alexandria, Virginia 22313-1450
www.uspto.gov

FISH & RICHARDSON P.C.
PO BOX 1022
MINNEAPOLIS, MN 55440-1022

Mail Date: 04/20/2010

Applicant	: Christopher R. Uhlik	: DECISION ON REQUEST FOR
Patent Number	: 7586655	: RECALCULATION of PATENT
Issue Date	: 09/08/2009	: TERM ADJUSTMENT IN VIEW
Appliction No	: 10/611,666	: OF WYETH AND NOTICE OF INTENT TO
Filed	: 06/30/2003	: ISSUE CERTIFICATE OF CORRECTION
		:

The Request for Recalculation is **GRANTED** to the extent indicated.

The patent term adjustment has been determined to be **1680** days. The USPTO will *sua sponte* issue a certificate of correction reflecting the amount of PTA days determined by the recalculation.

Prior to the issuance of the certificate of correction, the USPTO will afford patentee an opportunity to be heard and request reconsideration. Accordingly, patentee has **one month or thirty (30) days**, whichever is longer, to file a request for reconsideration of this patent term adjustment calculation. See 35 U.S.C. 154(b)(3)(B)(ii) and 37 CFR 1.322(a)(4). No extensions of time will be granted under 37 CFR 1.136.

Patentee should use document code PET.OP if electronically filing a request for reconsideration of this patent term adjustment calculation. The patentee must also include the information required by 37 CFR 1.705(b)(2) and the fee required by 37 CFR 1.18(e). If patentee does not file a timely request for reconsideration of this patent term adjustment calculation including the information required by 37 CFR 1.705(b)(2) and the fee required by 37 CFR 1.18(e), the USPTO will issue a certificate of correction reflecting the PTA determination noted above.

Patentee should be aware that in order to preserve the right to review in the United States District Court for the District of Columbia of the USPTO patent term adjustment determination, patentee must ensure that he or she also take the steps required under 35 U.S.C. 154(b)(4)(A) in a timely manner. Nothing in the request for recalculation should be construed as providing an alternative time frame for commencing a civil action under 35 U.S.C. 154(b)(4)(A).

Any questions concerning this decision should be directed to the Office of Patent Legal Administration at 571-272-7702.

UNITED STATES PATENT AND TRADEMARK OFFICE

Commissioner for Patents
United States Patent and Trademark Office
P.O. Box 1450
Alexandria, VA 22313-1450
www.uspto.gov

PFIZER INC
10555 SCIENCE CENTER DRIVE
SAN DIEGO CA 92121

MAILED

MAR 27 2009

OFFICE OF PETITIONS

In re Patent No. 7,439,329	:	
Smeal et al.	:	DECISION ON
Issue Date: October 21, 2008	:	REQUEST FOR RECONSIDERATION
Application No. 10/611,671	:	OF
Filed: July 2, 2003	:	PATENT TERM ADJUSTMENT
Attorney Docket No. PC23566A	:	

This is in response to the "REQUEST FOR RECONSIDERATION OF PATENT TERM ADJUSTMENT UNDER 37 CFR 1.705," filed December 19, 2008, requesting that the patent term adjustment determination for the above-identified patent be changed from five hundred sixty-six (566) days to seven hundred eighty-five (785) days.

The request for reconsideration of patent term adjustment is **DISMISSED**.

On October 21, 2008, the above-identified application matured into US Patent No. 7,439,329 with a patent term adjustment of 566 days. This request for reconsideration of patent term adjustment (including the required fee) was timely filed within two months of the issue date of the patent. See 1.705(d).

Patentees request recalculation of the patent term adjustment based on the decision in Wyeth v. Dudas, 580 F. Supp. 2d 138, 88 U.S.P.Q. 2d 1538 (D.D.C. 2008). Patentees assert that pursuant to Wyeth, a PTO delay under §154(b)(1)(A) overlaps with a delay under §154(b)(1)(B) only if the delays "occur on the same day." Patentees maintain that the period of adjustment due to the Three Year Delay by the Office, pursuant to 37 CFR § 1.703(b), of 219 days and the period of adjustment due to examination delay, pursuant to 37 CFR §1.702(a), of 683 days do not overlap as these periods do not occur on the same day.

The 219 day period is calculated based on the application having been filed under 35 U.S.C. §111(a) on July 2, 2003, and a request for continued examination (RCE) having being filed on February 6, 2007. The filing of a RCE cuts-off the applicants' ability to accumulate any additional patent term adjustment against the three-year pendency provision, but does not otherwise affect patent term adjustment. 37 CFR § 1.703(b)(1) Accordingly, the period of adjustment under § 1.702(b) is 219 days, counting the number of days beginning on July 3, 2006 and ending on February 6, 2007.

The 683 day period, pursuant to 37 CFR 1.702(a) is the sum of:

- a period of delay of 663 days for the failure by the Office to mail at least one of a notification under 35 U.S.C. 132 not later than fourteen months after the date on which the application was filed under 35 U.S.C. 111(a), pursuant to § 1.702(a)(1); and

- a period of delay of 20 days for the failure by the Office to respond to a reply under 35 U.S.C. 132 not later than four months after the date on which the reply was filed, pursuant to § 1.702(a)(2)

Under 37 CFR § 1.703(f), patentees are entitled to a period of patent term adjustment equal to the period of delays based on the grounds set forth in 37 CFR §1.702 reduced by the period of time equal to the period of time during which applicants failed to engage in reasonable efforts to conclude prosecution pursuant to 37 CFR §1.704. In other words, the period of Office delay reduced by the period of applicant delay. The period of reduction of 117 days for applicant delay is not in dispute[1].

Patentees agree that the total period of Office delay is the sum of the period of Three Years Delay terminated by the filing of a RCE (219 days) and the period of Examination Delay (683 days) to the extent that these periods of delay are not overlapping. However, patentees contend that no periods overlap. Accordingly, patentees submit that the total period of Office Delay is 902 days, which is the sum of the period of Three Year Delay terminated by the filing of a RCE (219 days) and the period of

[1] The periods of reduction include pursuant to 37 CFR 1.704(b), 34 days for response filed September 4, 2007, and pursuant to 37 CFR 1.704(c)(8), 83 days for a supplemental reply or other paper, not expressly requested by the examiner, after a reply has been filed.

Examination Delay (683 days), reduced by the period of overlap (0). See attachment to petition.

As such, patentees assert entitlement to a patent term adjustment of 785 days (219 + 683 reduced by 0 overlap - 117 days (applicant delay)).

The Office agrees that the actions detailed above were not taken within the specified time frames, and thus, the entry of period of adjustment of 683 days is correct. At issue is whether applicants should accrue 219 days of patent term adjustment for the Office taking in excess of three years to issue the patent, as well as, 683 days for Office failure to take certain actions within specified time frames (or examination delay).

The Office contends that 219 days overlap. Patentees' calculation of the period of overlap is inconsistent with the Office's interpretation of this provision. 35 U.S.C. 154(b)(2)(A) limits the adjustment of patent term, as follows:

> to the extent that the periods of delay attributable to grounds specified in paragraph (1) overlap, the period of any adjustment granted under this subsection shall not exceed the actual number of days the issuance of the patent was delayed.

Likewise, 37 CFR 1.703(f) provides that:

> To the extent that periods of delay attributable to the grounds specified in §1.702 overlap, the period of adjustment granted under this section shall not exceed the actual number of days the issuance of the patent was delayed.

As explained in *Explanation of 37 CFR 1.703(f) and of the United States Patent and Trademark Office Interpretation of 35 U.S.C. 154(b)(2)(A)*, 69 Fed. Reg. 34283 (June 21, 2004), the Office interprets 35 U.S.C. 154(b)(2)(A) as permitting either patent term adjustment under 35 U.S.C. 154(b)(1)(A)(i)-(iv), or patent term adjustment under 35 U.S.C. 154(b)(1)(B), but not as permitting patent term adjustment under both 35 U.S.C. 154(b)(1)(A)(i)-(iv) and 154(b)(1)(B). Accordingly, the Office implements the overlap provision as follows:

> If an application is entitled to an adjustment under 35 U.S.C. 154(b)(1)(B), the entire period during which the application was pending (except for periods excluded under 35 U.S.C. 154(b)(1)(B)(i)-(iii)), and not just the period beginning three years after the actual filing date of the application, is the period of delay under 35 U.S.C. 154(b)(1)(B) in determining whether periods of delay overlap under 35 U.S.C. 154(b)(2)(A). Thus, any days of delay for Office issuance of the patent more than 3 years after the filing date of the application, which overlap with the days of patent term adjustment accorded prior to the issuance of the patent will not result in any additional patent term adjustment. See 35 U.S.C. 154(b)(1)(B), 35 U.S.C. 154(b)(2)(A), and 37 CFR § 1.703(f). See *Changes to Implement Patent Term Adjustment Under Twenty Year Term; Final Rule*, 65 Fed. Reg. 54366 (Sept. 18, 2000). See also *Revision of Patent Term Extension and Patent Term Adjustment Provisions; Final Rule*, 69 Fed. Reg. 21704 (April 22, 2004), 1282 Off. Gaz. Pat. Office 100 (May 18, 2004). See also *Explanation of 37 CFR 1.703(f) and of the United States Patent and Trademark Office Interpretation of 35 U.S.C. 154(b)(2)(A)*, 69 Fed. Reg. 34283 (June 21, 2004).

The current wording of § 1.703(f) was revised in response to the misinterpretation of this provision by a number of applicants. The rule was slightly revised to more closely track the corresponding language of 35 U.S.C. 154(b)(2)(A). The relevant portion differs only to the extent that the statute refers back to provisions of the statute whereas the rule refers back to sections of the rule. This was not a substantive change to the rule nor did it reflect a change of the Office's interpretation of 35 U.S.C. 154(b)(2)(A). As stated in the *Explanation of 37 CFR 1.703(f) and of the United States Patent and Trademark Office Interpretation of 35 U.S.C. 154(b)(2)(A)*, the Office has consistently taken the position that if an application is entitled to an adjustment under the three-year pendency provision of 35 U.S.C. 154(b)(1)(B), the entire period during which the application was pending before the Office (except for periods excluded under 35 U.S.C. 154(b)(1)(B)(i)-(iii)), and not just the period beginning three years after the actual filing date of the application, is the relevant period under 35 U.S.C. 154(b)(1)(B) in determining whether periods of delay "overlap" under 35 U.S.C. 154(b)(2)(A).

This interpretation is consistent with the statute. Taken together the statute and rule provide that to the extent that periods of delay attributable to grounds specified in 35 U.S.C. 154(b)(1) and in corresponding §1.702 overlap, the period of adjustment granted shall not exceed the actual number of days the issuance of the patent was delayed. The grounds specified in these sections cover the A) guarantee of prompt Patent and Trademark Office responses, B) guarantee of no more than 3 year application pendency, and C) guarantee or adjustments for delays due to interference, secrecy orders and appeals. A section by section analysis of 35 U.S.C. 154(b)(2)(A) specifically provides that:

> Section 4402 imposes limitations on restoration of term. In general, pursuant to [35 U.S.C.] 154(b)(2)(A)-(C), total adjustments granted for restorations under [35 U.S.C. 154](b)(1) are reduced as follows: (1) To the extent that there are multiple grounds for extending the term of a patent that may exist simultaneously (e.g., delay due to a secrecy order under [35 U.S.C.] 181 and administrative delay under [35 U.S.C.] 154(b)(1)(A)), the term should not be extended for each ground of delay but only for the actual number of days that the issuance of a patent was delayed; See 145 Cong. Rec. S14,718[2]

As such, the period for over 3 year pendency does not overlap only to the extent that the actual dates in the period beginning three years after the date on which the application was filed overlap with the actual dates in the periods for failure of the Office to take action within specified time frames. In other words, consideration of the overlap does not begin three years after the filing date of the application. Treating the relevant period as starting on July 3, 2006, the date that is 3 years after the actual filing date of the application, is incorrect.

In this instance, the relevant period under 35 U.S.C. 154(b)(1)(B) in determining whether periods of delay "overlap" under 35 U.S.C. 154(b)(2)(A) is the entire period during which the application was pending before the Office, July 2, 2003 to October 21, 2008. 683 days of patent term adjustment were

---

[2] The AIPA is title IV of the Intellectual Property and Communications Omnibus Reform Act of 1999 (S. 1948), which was incorporated and enacted as law as part of Pub. L. 106-113. The Conference Report for H.R. 3194, 106th Cong. 1st Sess. (1999), which resulted in Pub. L. 106-113, does not contain any discussion (other than the incorporated language) of S. 1948. A section-by-section analysis of S. 1948, however, was printed in the Congressional Record at the request of Senator Lott, See 145 Cong. Rec. S14,708-26 (1999)(daily ed. Nov. 17, 1999).

accorded prior to the issuance of the patent for the Office failing to respond within specified time frames. Otherwise, the Office took all actions set forth in 37 C.F.R. § 1.702(a) within the prescribed timeframes. Nonetheless, given the 663 + 20 days of Office delay in issuing the first Office action and in responding to an Office action and the applicant delays and the permissible timeframes for taking action, as of the filing of the request for continued examination, this application was pending 3 years and 219 days. In other words, the 683 days of delay contributed to the over three year pendency. The issuance of the patent was delayed by 683 days, not 683 + 219 days. The Office did not delay 683 days and then an additional 219 days. Entry of both periods is not warranted. 683 days is determined to be the actual number of days that the issuance of the patent was delayed, considering the 219 days for over three year pendency. Accordingly, the Office properly determined that the 219 days for Office delay in issuing the patent overlapped with the 683 days. Accordingly, at issuance, the Office properly entered no additional days of patent term adjustment for the Office taking in excess of 3 years to issue the patent.

In view thereof, the Office affirms that the correct revised determination of patent term adjustment at the time of the issuance of the patent is 566 days (683 - 117).

The Office acknowledges submission of the $200.00 fee set forth in 37 CFR 1.18(e). No additional fees are required.

Patentees' request for refund of the fee is denied. This fee is required for consideration of the request and will not be refunded.

Telephone inquiries specific to this matter should be directed to Shirene Willis Brantley, Senior Petitions Attorney, at (571) 272-3230.

Nancy Johnson
Senior Petitions Attorney
Office of the Deputy Commissioner
for Patent Examination Policy

UNITED STATES PATENT AND TRADEMARK OFFICE

Commissioner for Patents
United States Patent and Trademark Office
P.O. Box 1450
Alexandria, VA 22313-1450
www.uspto.gov

FISH & RICHARDSON P.C.
PO BOX 1022
MINNEAPOLIS MN 55440-1022

COPY MAILED

JUL 18 2008

In re Application of O'Sullivan et al. Application No. 10/611,681 Filed: June 30, 2003 Attorney Docket No. 16113-1305001/GP-117-02	: : : : :	ON PETITION

This is a decision on the petition under 37 C.F.R. § 1.137(b), filed June 19, 2008, to revive the above-identified application.

The petition is **GRANTED**.

The petition satisfies the requirements of 37 CFR 1.137(b) in that petitioner has supplied (1) the reply in the form of an Amendment, (2) the petition fee, and (3) a proper statement of unintentional delay.

The file does not indicate a change of address has been submitted, although the address given on the petition differs from the address of record. If appropriate, a request to change the address of record should be filed. A courtesy copy of this decision is being mailed to the address given on the petition; however, the Office will mail all future correspondence solely to the address of record.

Telephone inquiries concerning this decision should be directed to the undersigned at (571) 272-3206.

This matter is being referred to Technology Center 2625 for further examination on the merits.

Liana Walsh
Petitions Examiner
Office of Petitions

cc:

FISH & RICHARDSON P.C.
ONE CONGRESS PLAZA, SUITE 810
111 CONGRESS AVENUE
AUSTIN, TX 78701

UNITED STATES PATENT AND TRADEMARK OFFICE

UNITED STATES DEPARTMENT OF COMMERCE
United States Patent and Trademark Office
Address: COMMISSIONER FOR PATENTS
P.O. Box 1450
Alexandria, Virginia 22313-1450
www.uspto.gov

INTELLECTUAL PROPERTY MANAGEMENT
BOEING MANAGEMENT COMPANY
P.O. BOX 2515
MAIL CODE 110-SD54
SEAL BEACH, CA 90740-1515

Mail Date: 04/20/2010

Applicant	: Robert W. Turner	: DECISION ON REQUEST FOR
Patent Number	: 7626632	: RECALCULATION of PATENT
Issue Date	: 12/01/2009	: TERM ADJUSTMENT IN VIEW
Appliction No	: 10/611,702	: OF WYETH AND NOTICE OF INTENT TO
Filed	: 06/30/2003	: ISSUE CERTIFICATE OF CORRECTION
		:

The Request for Recalculation is **GRANTED** to the extent indicated.

The patent term adjustment has been determined to be **1857** days. The USPTO will *sua sponte* issue a certificate of correction reflecting the amount of PTA days determined by the recalculation.

Prior to the issuance of the certificate of correction, the USPTO will afford patentee an opportunity to be heard and request reconsideration. Accordingly, patentee has **one month or thirty (30) days**, whichever is longer, to file a request for reconsideration of this patent term adjustment calculation. See 35 U.S.C. 154(b)(3)(B)(ii) and 37 CFR 1.322(a)(4). No extensions of time will be granted under 37 CFR 1.136.

Patentee should use document code PET.OP if electronically filing a request for reconsideration of this patent term adjustment calculation. The patentee must also include the information required by 37 CFR 1.705(b)(2) and the fee required by 37 CFR 1.18(e). If patentee does not file a timely request for reconsideration of this patent term adjustment calculation including the information required by 37 CFR 1.705(b)(2) and the fee required by 37 CFR 1.18(e), the USPTO will issue a certificate of correction reflecting the PTA determination noted above.

Patentee should be aware that in order to preserve the right to review in the United States District Court for the District of Columbia of the USPTO patent term adjustment determination, patentee must ensure that he or she also take the steps required under 35 U.S.C. 154(b)(4)(A) in a timely manner. Nothing in the request for recalculation should be construed as providing an alternative time frame for commencing a civil action under 35 U.S.C. 154(b)(4)(A).

Any questions concerning this decision should be directed to the Office of Patent Legal Administration at 571-272-7702.

UNITED STATES PATENT AND TRADEMARK OFFICE

Commissioner for Patents
United States Patent and Trademark Office
P.O. Box 1450
Alexandria, VA 22313-1450
www.uspto.gov
DIW 08-04

ANDRUS, SCEALES, STARKE & SAWALL, LLP
100 EAST WISCONSIN AVENUE, SUITE 1100
MILWAUKEE WI 53202

COPY MAILED

AUG 3 0 2004

OFFICE OF PETITIONS

In re Application of	:	
Mitsuyuki Uchikoshi	:	
Application No. 10/611,713	:	ON PETITION
Filed: 1 July, 2003	:	
Att'y Docket No. 1779-00016	:	

This is a decision on the petition under 1.137(b),[1] filed on 10 August, 2004, to revive the above-identified application.

The petition is **GRANTED**.

This application became abandoned on 10 June, 2004, for failure to timely submit the issue and publication fees as required by the Notice of Allowance and Issue Fee Due mailed on 9 March, 2004, which set a three (3) month statutory period for reply. Notice of Abandonment was mailed on 26 July, 2004.

---

[1]Effective December 1, 1997, the provisions of 37 CFR 1.137(b) now provide that where the delay in reply was unintentional, a petition may be filed to revive an abandoned application or a lapsed patent pursuant to 37 CFR 1.137(b). A grantable petition filed under the provisions of 37 CFR 1.137(b) must be accompanied by:

(1) the required reply, unless previously filed. In a nonprovisional application abandoned for failure to prosecute, the required reply may be met by the filing of a continuing application. In a nonprovisional application filed on or after June 8, 1995, and abandoned for failure to prosecute, the required reply may also be met by the filing of a request for continued examination in compliance with § 1.114. In an application or patent, abandoned or lapsed for failure to pay the issue fee or any portion thereof, the required reply must be the payment of the issue fee or any outstanding balance thereof. In an application abandoned for failure to pay the publication fee, the required reply must include payment of the publication fee.

(2) the petition fee as set forth in 37 CFR 1.17(m);

(3) a statement that the entire delay in filing the required reply from the due date for the reply until the filing of a grantable petition pursuant to 37 CFR 1.137(b) was unintentional. The Commissioner may required additional information where there is a question whether the delay was unintentional; and

(4) any terminal disclaimer (and fee as set forth in 37 CFR 1.20(d)) required pursuant to 37 CFR 1.137(c)).

The statement contained in the instant petition does not set forth that the entire delay from the due date of the required reply to the date of the filing of a grantable petition was unintentional as required by 37 CFR 1.137(b)(3). However, the statement contained in the instant petition is being so construed. Petitioner **must** notify the Office if this is not a correct interpretation.

The application file is being forwarded to Publishing Division for processing into a patent.

Telephone inquiries concerning this matter may be directed to the undersigned at (703)308-6918.

Douglas I. Wood
Senior Petitions Attorney
Office of Petitions

UNITED STATES PATENT AND TRADEMARK OFFICE

Commissioner for Patents
United States Patent and Trademark Office
P.O. Box 1450
Alexandria, VA 22313-1450
www.uspto.gov

JUL -2 2004

In re Application of	:	
Gary F. Driscoll et al.	:	
Serial No. 10/611,724	:	DECISION ON PETITION
Filed: July 1, 2003	:	TO WITHDRAW AS ATTORNEY
For: SYSTEMS AND METHODS FOR	:	
COMPUTER-BASED TESTING	:	
USING NETWORK-BASED	:	
SYNCHRONIZATION OF	:	
INFORMATION	:	

By papers filed on April 28, 2004, counsel has petitioned to withdraw as attorney of record in this application.

The petition is GRANTED.

Applicant is advised that the correspondence address for this application is:

W. Joseph Melnik, Esq.q
Pepper Hamilton, LLP
500 Grant Street, 50th Floor
Pittsburgh, PA 15219-2502

E. Rollins-Cross, Director
Technology Center 3700

Woodcock Washburn, LLP
One Liberty Place, 46th Floor
1650 Market Street
Philadelphia, PA 19103

UNITED STATES PATENT AND TRADEMARK OFFICE

COMMISSIONER FOR PATENTS
UNITED STATES PATENT AND TRADEMARK OFFICE
P.O. BOX 1450
ALEXANDRIA, VA 22313-1450
www.uspto.gov

MAR 19 2004

In re Application of	:	
Kim Davis et al.	:	
Serial No. 10/611,727	:	DECISION ON PETITION
Filed: July 1, 2003	:	TO MAKE SPECIAL
For: SIZING TAG	:	

Applicant's petition, filed August 21, 2003, seeks to have this application made special pursuant to the Accelerated Examination Program. The petition is GRANTED.

The petition has been reviewed and is found to be in compliance with the requirements for special status as set forth in Section 708.02(VIII) of the Manual of Patent Examining Procedures (MPEP).

Applicant is advised that the examiner's search will be restricted to the subject matter encompassed by the claims. In the event that the application receives a first action rejection, applicant is encouraged to arrange for an interview with the examiner, and to provide the examiner with a working copy of any proposed amendment one working day prior to the interview. Any amendment filed in response to a first action rejection which would require broadening of the field of search will be treated as an improper response.

PETITION GRANTED.

E. Rollins-Cross

E. Rollins-Cross, Director
Technology Center 3700

Notaro and Michalos
100 Dutch Hill Road, Suite 110
Orangeburg, NY 10962-2100

UNITED STATES PATENT AND TRADEMARK OFFICE

Commissioner for Patents
United States Patent and Trademark Office
P.O. Box 1450
Alexandria, VA 22313-1450
www.uspto.gov

JJGJR.: 07-05

Paper No: __

CHARLES W. CALKINS
KILPATRICK STOCKTON LLP
1001 WEST FOURTH STREET
WINSTON-SALEM NC 27101-2410

COPY MAILED

JUL 11 2005

OFFICE OF PETITIONS

In re Application of	:	
Mjalli, et al.	:	
Application No. 10/611,741	:	DECISION
Filing Date: 1 July, 2003	:	
Attorney Docket No.: 41305.287124	:	

This is a decision on the petition filed on 11 April, 2005, under 37 C.F.R. §1.183, and considered more appropriately as a petition under 37 C.F.R. §1.47.

For the reasons set forth below, the petition:

- under 37 C.F.R. §1.183 is **DISMISSED**, and
- as considered under 37 C.F.R. §1.47 is **DISMISSED**.

NOTES:

(1) Any petition (and fee) for reconsideration of this decision must be submitted within two (2) months from the mail date of this decision. Extensions of time under 37 C.F.R. §1.136(a) are permitted. The reconsideration request should include a cover letter entitled "Renewed Petition under 37 C.F.R. §1.47."

(2) Thereafter, there will be no further reconsideration of this matter.

BACKGROUND

The record reflects that:

- Petitioner alleges that one of the named inventors now is deceased and seeks waiver of the statutory and regulatory requirements to proceed with the prosecution without the appropriate review of the application and signing of the oath/declaration;

- Petitioner further alleges that a copy of a death certificate has been submitted, but no such document appears as part of the record at this writing.

ANALYSIS

Having failed to file a properly executed oath/declaration, Petitioner contends that the Office should waive not only the Rules of Practice but statute as well (35 U.S.C. §§115 - 117) under 37 C.F.R. §1.183[1] and allow Petitioner to prosecute the instant application without satisfying the requirements of a signed oath/declaration.

As one registered to practice before the Office, Petitioner is familiar with the above-referenced statutes and the commentary at MPEP §409,01, et seq.:

> 409.01 Death of Inventor
> Unless a power of attorney is coupled with an interest (i.e., an attorney is assignee or part-assignee), the death of the inventor (or one of the joint inventors) terminates the power of attorney given by the deceased inventor. A new power from the heirs, administrators, executors, or assignees is necessary if the deceased inventor is the sole inventor or all powers of attorney in the application have been terminated (but see MPEP § 409.01(f)). See also 37 C.F.R. §1.422.
>
> 409.01(a) Prosecution by Administrator or Executor
>
> > **35 U.S.C. 117. Death or incapacity of inventor**
> > Legal representatives of deceased inventors and of those under legal incapacity may make application for patent upon compliance with the requirements and on the same terms and conditions applicable to the inventor.

---

[1] The regulations at 37 C.F.R. §1.183 provide, in pertinent part:
§1.183 Suspension of the Rules.
In an extraordinary situation, when justice requires, any requirement of the regulations in this part which is not a requirement of the statutes may be suspended or waived by the Commissioner or the Commissioner's designee, *sua sponte*, or on petition of the interested party, subject to such other requirements as may be imposed. * * *

> **37 C.F.R. §1.42. When the inventor is dead.**
> In case of the death of the inventor, the legal representative (executor, administrator, etc.) of the deceased inventor may make the necessary oath or declaration, and apply for and obtain the patent. Where the inventor dies during the time intervening between the filing of the application and the granting of a patent thereon, the letters patent may be issued to the legal representative upon proper intervention.

One who has reason to believe that he or she will be appointed legal representative of a deceased inventor may apply for a patent as legal representative in accordance with 37 C.F.R. 1.42.

Application may be made by the heirs of the inventor, as such, if there is no will or the will did not appoint an executor and the estate was under the sum required by state law for the appointment of an administrator. The heirs should identify themselves as the legal representative of the deceased inventor in the oath or declaration submitted pursuant to 37 C.F.R. 1.63 and 1.64.

409.01(b) Proof of Authority of Administrator or Executor
The Office no longer requires proof of authority of the legal representative of a deceased or incapacitated inventor. Although the Office does not require proof of authority to be filed, any person acting as a legal representative of a deceased or incapacitated inventor should ensure that he or she is properly acting in such a capacity.

Petitioner's failure to act in compliance with statute(s) and regulation(s) creates no "extraordinary situation" requiring the invocation of the interests of justice.

The Office, where it has the power to do so, should not relax the requirements of established practice in order to save an applicant from the consequence of his delay.[2]

Moreover, the Office has no authority to waive the statutory requirements.

---

[2] See, Ex Parte Sassin, 1906 Dec. Comm'r. Pat. 205, 206 (Comm'r Pat. 1906) and compare Ziegler v. Baxter v. Natta, 159 USPQ 378, 379 (Comm'r Pat. 1968) and Williams v. The Five Platters, Inc., 510 F.2d 963, 184 USPQ 744 (CCPA 1975). Thus, there is no adequate showing of "an extraordinary situation" in which "justice requires" suspension of the time period set forth in 37 C.F.R. 1.193(b). See, Nitto Chem. Indus. Co. v. Comer, 39 USPQ2d 1778, 1782 (D.D.C. 1994) (circumstances are not extraordinary, and do not require waiver of the rules, when a party makes an avoidable mistake in filing papers). Circumstances resulting from petitioner's failure to exercise due care, or lack of knowledge of or failure to properly apply the patent statutes or rules of practice are not, in any event, extraordinary circumstances where the interests of justice require the granting of relief. See, In re Tetrafluor, Inc., 17 USPQ2d 1160, 1162 (Comm'r Pats. 1990); In re Bird & Son, Inc. 195 USPQ 586, 588 (Comm'r Pats. 1977).

Thus, Petitioner seeks a waiver pursuant to 37 C.F.R. §1.183[3] that is neither justified nor permitted.

Accordingly, the petition under 37 C.F.R. §1.183 is **dismissed**.

Thus, Petitioner has made no satisfactory showing in support of a petition under 37 C.F.R. §1.47.

Accordingly, the petition as considered under 37 C.F.R. §1.47 is **dismissed**.

Further correspondence with respect to this matter should be addressed as follows:

By mail: Commissioner for Patents
P.O. Box 1450
Alexandria, VA 22313-1450

By FAX: IFW Formal Filings
(703) 872-9306
ATTN.: Office of Petitions

By hand: Mail Stop: Petition
Customer Service Window
Randolph Building
401 Dulany Street
Alexandria, VA 22314

Telephone inquiries concerning this decision may be directed to the undersigned at (571) 272-3214.

John J. Gillon, Jr.
Senior Attorney
Office of Petitions

---

[3] Delay resulting from the inadvertence or mistake of Petitioner does not warrant equitable tolling of the time period of 37 C.F.R. §1.193(b). Equitable powers should not be invoked to excuse the performance of a condition by a party that has not acted with reasonable, due care and diligence. U.S. v. Lockheed Petroleum Services, 709 F.2d 1472, 1475 (Fed. Cir. 1983); Smith v. Mossinghoff, 671 F.2d 533, 538, 213 USPQ 977, 982 (D.C. Cir. 1982). Even assuming *arguendo*, that clerical inadvertence or error caused or contributed to the delay in filing the Reply Brief, such is not a ground for requesting waiver of the regulations. See In re Kabushiki Kaisha Hitachi Seisakusho, 39 USPQ2d 1319, 1320 (Comm'r Pat. 1994).

UNITED STATES PATENT AND TRADEMARK OFFICE

Commissioner for Patents
United States Patent and Trademark Office
P.O. Box 1450
Alexandria, VA 22313-1450
www.uspto.gov

KILPATRICK STOCKTON LLP - 41305
CHARLES CALKINS
1001 WEST FOURTH STREET
WINSTON-SALEM NC 27101

COPY MAILED

SEP 07 2007

OFFICE OF PETITIONS

In re Patent No. 7,067,554 :
Issue Date: June 27, 2006 :
Application No. 10/611,741 : NOTICE
Filed: July 1, 2003 :
Attorney Docket No. 41305.287124 :

This is a notice regarding your request for acceptance of a fee deficiency submission under 37 CFR 1.28. On September 1, 1998, the Court of Appeals for the Federal Circuit held that 37 CFR 1.28(c) is the sole provision governing the time for correction of the erroneous payment of the issue fee as a small entity. **See DH Technology v. Synergystex International, Inc. 154 F.3d 1333, 47 USPQ2d 1865 (Fed. Cir. Sept. 1, 1998).**

The Office no longer investigates or rejects original or reissue applications under 37 CFR 1.56. **1098 Off. Gaz. Pat. Office 502 (January 3, 1989)**. Therefore, nothing in this Notice is intended to imply that an investigation was done.

Your fee deficiency submission under 37 CFR 1.28 is hereby **ACCEPTED**.

This application no longer qualifies for small entity status. Accordingly, all future fees in this file must be paid at the large entity rate, absent further notification from a proper party of a change in status. ***See 37 CFR 1.27(c)(2).***

Inquiries related to this communication should be directed to the undersigned at (571) 272-3208.

Karen Creasy

Karen Creasy
Petitions Examiner
Office of Petitions

OIPE JC106
FEB 25 2005
PATENT & TRADEMARK OFFICE

10/611747
AU-1744

In the United States Patent and Trademark Office

Applicant: Allan P. Bakke

Mailed: February 16, 2005
At: Rochester, Minnesota

Declaration in Support of Accompanying Petition to Make Special
Reason IV - Applicant's Age is 65 or Greater

In support of the accompanying Petition to Make Special, applicant declares as follows:

1. I am the applicant in the patent application entitled "Apparatus for thawing frozen biological fluids utilizing heating plates and oscillatory motion to enhance heat transfer by mixing," application number 10/611,747 filed 6/30/2003.
2. My date of birth is February 4, 1940.
3. I further state that all statements made herein of my own knowledge are true and that all statements made upon information and belief are believed to be true, and further that these statements were made with the knowledge that willful and false statements and the like so made arte punishable by fine or imprisonment, or both, under section 1001 of Title 18 of the United States Code, and that such willful and false statements may jeopardize the validity of the application and any patent issuing therefrom.

Very respectfully,

Allan P. Bakke

Allan P. Bakke
Applicant Pro Se

3220 County View Ct SW
Rochester, MN 55902
507-288-3540

PETITION GRANTED

Richard Crispino
Special Program Examiner
TC 1700

MAR - 3 2005

UNITED STATES PATENT AND TRADEMARK OFFICE

Commissioner for Patents
United States Patent and Trademark Office
P.O. Box 1450
Alexandria, VA 22313-1450
www.uspto.gov

OCT 12 2004

RATNERPRESTIA
P.O. BOX 1596
WILIMINGTON, DE 19899

In re Application of	:	
William T. Wilkinson et al	:	
Serial No.: 10/611,763	:	DECISION ON PETITION
Filed: July 1, 2003	:	
For: Exercise Device For Exercising Upper	:	
Body Simultaneously With Lower Body	:	
Exercise	:	

This is in response to applicants' petition filed May 4, 2004, to make the above-identified application special under the provisions of 37 CFR 1.102(c), based on the age of the applicant.

Applicant has satisfied the provisions set forth in M.P.E.P. 708.02, IV. Therefore the petition is **GRANTED**.

The application will be forwarded to the examiner for action on the merits commensurate with this decision.

Should there be any questions with regard to this letter please contact John Kittle by letter addressed to the Director, Technology Center 3700/2900, Washington, DC 20231, or by telephone at (703) 308-0873 or by facsimile transmission at (703) 308-3139.

John E. Kittle

John E. Kittle
Director,
Technology Center 3700/2900

UNITED STATES PATENT AND TRADEMARK OFFICE

2661

COMMISSIONER FOR PATENTS
UNITED STATES PATENT AND TRADEMARK OFFICE
P.O. BOX 1450
ALEXANDRIA, VA 22313-1450
www.uspto.gov

BLAKELY SOKOLOFF TAYLOR & ZAFMAN
12400 WILSHIRE BOULEVARD, SEVENTH FLOOR
LOS ANGELES CA 90025

COPY MAILED

FEB 1 0 2004

OFFICE OF PETITIONS

In re Application of
Guerrero, et al.
Application No. 10/611,770
Filed: June 30, 2003
Attorney Docket No. 42P16532
For: METHOD AND APPARATUS TO PERFORM A MULTI-FIELD MATCHING SEARCH

ON PETITION

This is a decision on the petition under 37 CFR 1.182, filed November 28, 2003, requesting that Figure 6, omitted from the initial filing on June 30, 2003, be included in the original disclosure of the above-identified application and that the application be accorded a filing date of June 30 2003.

The petition under 37 CFR 1.182 is **DISMISSED**.

Any request for reconsideration of this decision must be submitted within TWO (2) MONTHS from the mail date of this decision. Extensions of time under 37 CFR 1.136(a) are permitted.

The application was filed on June 30, 2003. On September 24, 2003, The Office of Initial Patent Examination mailed a "Notice to File Missing Parts of Nonprovisional Application" (Notice) stating that the application had been accorded a filing date of June 30, 2003, and advising applicants, *inter alia*, that Figure 6 referenced in the specification appeared to have been omitted.

In response, the present petition was filed.

The mailing of the Notice permitted applicants to either: (1) promptly establish prior receipt in the PTO of the items at issue (generally by way of a date-stamped postcard receipt (MPEP 503)), or (2) promptly submit the omitted items in a nonprovisional application and accept the date of such submission as the application filing date. An applicant asserting that the missing items were in fact deposited in the PTO with the application papers must file a petition (and the appropriate petition fee) with evidence of such deposit. An applicant desiring to submit the omitted items in a nonprovisional application and accept the date of such submission as the application filing date must file any omitted items with an oath or declaration in compliance with 37 CFR 1.63 and 1.64 referring to such items and a petition under 37 CFR 1.182 (with the petition fee under 37 CFR 1.17(h)) requesting the later filing date within two months of the date of the Notice (37 CFR 1.181(f)).

Petitioners have not established prior receipt in the Office of Figure 6 and petitioners have not requested a later filing date for the application.

Instead, petitioners admit Figures 6 was not present among the application papers filed on June 30, 2003, but assert that Figure 6 was referred to in the specification filed on June 30, 2003.

Presumably petitioners are arguing that Figure 6 is fully described in the specification filed on June 30, 2003 and does not contain new matter. Whether the later filed drawing contains new matter is not the issue. Either the drawing was present in the Office on the filing date of the application or it was not. If it was not present on the filing date, it cannot be considered a part of the original disclosure of the application.

Applicant does not allege in the petition that Figure 6 was present in the Office on June 30, 2003, and a review of the file confirms that Figure 6 was not present on June 30, 2003. Therefore, the application cannot be accorded a June 30, 2003 filing date with the drawing of Figure 6 as a part of the original disclosure. The issue of new matter is one appropriately addressed during prosecution of the application after the filing date of the application has been determined.

Of course, applicants may submit the drawing of Figure 6 as an amendment to the drawing figures in which case the examiner will determine whether the additional sheet of drawing contains new matter (see MPEP 608.02(h)).

Further correspondence with respect to this matter should be addressed as follows:

By mail: Mail Stop PETITION
Commissioner for Patents
Post Office Box 1450
Alexandria, VA 22313-1450
ATTN: E. Shirene Willis

By hand: Crystal Plaza 1 Lobby
2011 South Clark Place
Room 1B03
Arlington, VA 22202
ATTN: E. Shirene Willis

By FAX: (703) 872-9306
ATTN: Office of Petitions -- E. Shirene Willis

The application is being returned to Initial Patent Examination Division for further processing with a filing date of **June 30, 2003.** Figure 6 will not be considered as part of the original disclosure.

Thereafter, the application will be forwarded to Technology Center 2600 for examination in due course.

Telephone inquiries specific to this matter should be directed to the undersigned at (703) 308-6712.

E. Shirene Willis

E. Shirene Willis
Senior Petitions Attorney
Office of Petitions
Office of the Deputy Commissioner
for Patent Examination Policy

UNITED STATES PATENT AND TRADEMARK OFFICE

Commissioner for Patents
United States Patent and Trademark Office
P.O. Box 1450
Alexandria, VA 22313-1450
www.uspto.gov

International Flora Technologies, Ltd.
c/o CPA Global
P.O. Box 52050
Minneapolis MN 55402

COPY MAILED

MAR 10 2009

OFFICE OF PETITIONS

In re Application of
Hill, et al.
Application No. 10/611,775
Filed: June 30, 2003
Attorney Docket No. FLORA.1300

DECISION ON PETITION
UNDER 37 CFR 1.78(a)(3)

This is a decision on the petition under 37 CFR 1.78(a)(3), filed April 29, 2008 and supplemented on March 5, 2009, to accept an unintentionally delayed claim under 35 U.S.C. § 120 for the benefit of priority to the prior-filed nonprovisional application set forth in the supplemental ADS filed on March 5, 2009.

The petition is **GRANTED**.

A petition for acceptance of a claim for late priority under 37 CFR 1.78(a)(3) is only applicable to those applications filed on or after November 29, 2000. Further, the petition is appropriate only after the expiration of the period specified in 37 CFR 1.78(a)(2)(ii). In addition, the petition under 37 CFR 1.78(a)(3) must be accompanied by:

(1) the reference required by 35 U.S.C. § 120 and 37 CFR 1.78(a)(2)(i) of the prior-filed application, unless previously submitted;
(2) the surcharge set forth in § 1.17(t); and
(3) a statement that the entire delay between the date the claim was due under 37 CFR 1.78(a)(2)(ii) and the date the claim was filed was unintentional. The Director may require additional information where there is a question whether the delay was unintentional.

All of the above requirements having been satisfied, the late claim for priority under 35 U.S.C. § 120 is accepted as being unintentionally delayed.

The granting of the petition to accept the delayed benefit claim to the prior-filed application under 37 CFR 1.78(a)(3) should not be construed as meaning that this application is entitled to the benefit of the prior-filed application. In order for this application to be entitled to the benefit of the prior-filed application, all other requirements under 35 U.S.C. § 120 and 37

CFR 1.78(a)(1) and (a)(2) must be met. Similarly, the fact that the corrected Filing Receipt accompanying this decision on petition includes the prior-filed application should not be construed as meaning that applicant is entitled to the claim for benefit of priority to the prior-filed application noted thereon. Accordingly, the examiner will, in due course, consider this benefit claim and determine whether the application is entitled to the benefit of the earlier filing date.

A corrected Filing Receipt, which includes the priority claim to the prior-filed nonprovisional application, accompanies this decision on petition.

Any inquiries concerning this decision may be directed to the undersigned at (571) 272-3230. All other inquiries concerning either the examination procedures or status of the application should be directed to the Technology Center.

This application is being forwarded to Technology Center Art Unit 1611 for consideration by the examiner of applicants' entitlement to claim benefit of priority under 35 U.S.C. § 120 to the prior-filed application and for consideration of the amendment filed on January 16, 2009.

Shirene Willis Brantley
Senior Petitions Attorney
Office of Petitions

ATTACHMENT: Corrected Filing Receipt

UNITED STATES PATENT AND TRADEMARK OFFICE

UNITED STATES DEPARTMENT OF COMMERCE
United States Patent and Trademark Office
Address: COMMISSIONER FOR PATENTS
P.O. Box 1450
Alexandria, Virginia 22313-1450
www.uspto.gov

APPLICATION NUMBER	FILING or 371(c) DATE	GRP ART UNIT	FIL FEE REC'D	ATTY.DOCKET.NO	TOT CLAIMS	IND CLAIMS
10/611,775	06/30/2003	1611	393	FLORA.1300	22	2

CONFIRMATION NO. 1915

CORRECTED FILING RECEIPT

77037
International Flora Technologies, Ltd.
c/o CPA Global
P.O. Box 52050
Minneapolis, MN 55402

OC000000034896148

Date Mailed: 03/09/2009

Receipt is acknowledged of this non-provisional patent application. The application will be taken up for examination in due course. Applicant will be notified as to the results of the examination. Any correspondence concerning the application must include the following identification information: the U.S. APPLICATION NUMBER, FILING DATE, NAME OF APPLICANT, and TITLE OF INVENTION. Fees transmitted by check or draft are subject to collection. Please verify the accuracy of the data presented on this receipt. **If an error is noted on this Filing Receipt, please submit a written request for a Filing Receipt Correction. Please provide a copy of this Filing Receipt with the changes noted thereon. If you received a "Notice to File Missing Parts" for this application, please submit any corrections to this Filing Receipt with your reply to the Notice. When the USPTO processes the reply to the Notice, the USPTO will generate another Filing Receipt incorporating the requested corrections**

Applicant(s)

John C. Hill, Mesa, AZ;
Robert Kleiman, Sun Lakes, AZ;
James H Brown, Scottsdale, AZ;
Sambasivarao Koritala, Sun Lakes, AZ;

Power of Attorney: The patent practitioners associated with Customer Number 39602

Domestic Priority data as claimed by applicant

This application is a CIP of 09/478,071 01/03/2000 PAT 7,435,424

Foreign Applications

If Required, Foreign Filing License Granted: 09/24/2003

The country code and number of your priority application, to be used for filing abroad under the Paris Convention, is **US 10/611,775**

Projected Publication Date: Not Applicable

Non-Publication Request: No

Early Publication Request: No
**** SMALL ENTITY ****

Title

High unsaponifiables and methods of using the same and its derivatives and uses thereof

Preliminary Class

424

PROTECTING YOUR INVENTION OUTSIDE THE UNITED STATES

Since the rights granted by a U.S. patent extend only throughout the territory of the United States and have no effect in a foreign country, an inventor who wishes patent protection in another country must apply for a patent in a specific country or in regional patent offices. Applicants may wish to consider the filing of an international application under the Patent Cooperation Treaty (PCT). An international (PCT) application generally has the same effect as a regular national patent application in each PCT-member country. The PCT process **simplifies** the filing of patent applications on the same invention in member countries, but **does not result** in a grant of "an international patent" and does not eliminate the need of applicants to file additional documents and fees in countries where patent protection is desired.

Almost every country has its own patent law, and a person desiring a patent in a particular country must make an application for patent in that country in accordance with its particular laws. Since the laws of many countries differ in various respects from the patent law of the United States, applicants are advised to seek guidance from specific foreign countries to ensure that patent rights are not lost prematurely.

Applicants also are advised that in the case of inventions made in the United States, the Director of the USPTO must issue a license before applicants can apply for a patent in a foreign country. The filing of a U.S. patent application serves as a request for a foreign filing license. The application's filing receipt contains further information and guidance as to the status of applicant's license for foreign filing.

Applicants may wish to consult the USPTO booklet, "General Information Concerning Patents" (specifically, the section entitled "Treaties and Foreign Patents") for more information on timeframes and deadlines for filing foreign patent applications. The guide is available either by contacting the USPTO Contact Center at 800-786-9199, or it can be viewed on the USPTO website at http://www.uspto.gov/web/offices/pac/doc/general/index.html.

For information on preventing theft of your intellectual property (patents, trademarks and copyrights), you may wish to consult the U.S. Government website, http://www.stopfakes.gov. Part of a Department of Commerce initiative, this website includes self-help "toolkits" giving innovators guidance on how to protect intellectual property in specific countries such as China, Korea and Mexico. For questions regarding patent enforcement issues, applicants may call the U.S. Government hotline at 1-866-999-HALT (1-866-999-4158).

LICENSE FOR FOREIGN FILING UNDER

Title 35, United States Code, Section 184

Title 37, Code of Federal Regulations, 5.11 & 5.15

GRANTED

The applicant has been granted a license under 35 U.S.C. 184, if the phrase "IF REQUIRED, FOREIGN FILING LICENSE GRANTED" followed by a date appears on this form. Such licenses are issued in all applications where the conditions for issuance of a license have been met, regardless of whether or not a license may be required as

set forth in 37 CFR 5.15. The scope and limitations of this license are set forth in 37 CFR 5.15(a) unless an earlier license has been issued under 37 CFR 5.15(b). The license is subject to revocation upon written notification. The date indicated is the effective date of the license, unless an earlier license of similar scope has been granted under 37 CFR 5.13 or 5.14.

This license is to be retained by the licensee and may be used at any time on or after the effective date thereof unless it is revoked. This license is automatically transferred to any related applications(s) filed under 37 CFR 1.53(d). This license is not retroactive.

The grant of a license does not in any way lessen the responsibility of a licensee for the security of the subject matter as imposed by any Government contract or the provisions of existing laws relating to espionage and the national security or the export of technical data. Licensees should apprise themselves of current regulations especially with respect to certain countries, of other agencies, particularly the Office of Defense Trade Controls, Department of State (with respect to Arms, Munitions and Implements of War (22 CFR 121-128)); the Bureau of Industry and Security, Department of Commerce (15 CFR parts 730-774); the Office of Foreign AssetsControl, Department of Treasury (31 CFR Parts 500+) and the Department of Energy.

NOT GRANTED

No license under 35 U.S.C. 184 has been granted at this time, if the phrase "IF REQUIRED, FOREIGN FILING LICENSE GRANTED" DOES NOT appear on this form. Applicant may still petition for a license under 37 CFR 5.12, if a license is desired before the expiration of 6 months from the filing date of the application. If 6 months has lapsed from the filing date of this application and the licensee has not received any indication of a secrecy order under 35 U.S.C. 181, the licensee may foreign file the application pursuant to 37 CFR 5.15(b).

UNITED STATES PATENT AND TRADEMARK OFFICE

Commissioner for Patents
United States Patent and Trademark Office
P.O. Box 1450
Alexandria, VA 22313-1450
www.uspto.gov

STITES & HARBISON PLLC
1199 NORTH FAIRFAX STREET
SUITE 900
ALEXANDRIA VA 22314

RECEIVED

DEC 19 2008

OFFICE OF PETITIONS

In re Application of :
Timothy Pryor :
Application No. 10/611,814 :
Filed: July 2, 2003 :
Attorney Docket No. P07679US02/RFH :

DECISION ON PETITION
UNDER 37 CFR 1.137(b)

This is a decision on the petition, filed August 4, 2008, which is being treated as a petition under 37 CFR 1.137(b) to revive the instant nonprovisional application for failure to timely notify the U.S. Patent and Trademark (USPTO) of the filing of an application in a foreign country, or under a multinational treaty that requires publication of applications eighteen months after filing. *See* 37 CFR 1.137(f).

The petition is **GRANTED**.

Petitioner states that the instant nonprovisional application is the subject of an application filed in an eighteen-month publication country on March 31, 2004. However, the USPTO was unintentionally not notified of this filing within 45 days subsequent to the filing of the subject application in an eighteen-month publication country.

In view of the above, this application became abandoned pursuant to 35 U.S.C. § 122(b)(2)(B)(iii) and 37 CFR 1.213(c) for failure to timely notify the Office of the filing of an application in a foreign country or under a multilateral international agreement that requires publication of applications 18 months after filing.

A petition to revive an application abandoned pursuant to 35 U.S.C. 122(b)(2)(B)(iii) for failure to notify the USPTO of a foreign filing must be accompanied by:

(1) the required reply which is met by the notification of such filing in a foreign country or under a multinational treaty;
(2) the petition fee as set forth in 37 CFR 1.17(m); and
(3) a statement that the entire delay in filing the required reply from the due date of the reply until the filing of a grantable petition was unintentional.

The instant petition has been found to be in compliance with 37 CFR 1.137(b). Accordingly, the failure to timely notify the USPTO of a foreign or international filing within 45 days after the date of filing of such foreign or international application as provided by 35 U.S.C. § 122(b)(2)(B)(iii) and 37 CFR 1.213(c) is accepted as having been unintentionally delayed.

The previous Request and Certification under 35 U.S.C. § 122(b)(2)(B)(i) has been rescinded. A Notice Regarding Rescission of Nonpublication Request which sets forth the projected publication date of March 26, 2009 accompanies this decision on petition.

A Notice of Allowability and a Notice of Allowance and Fee(s) Due were mailed in this case on June 9, 2008. However, in view of the nonpublication request filed with the application, the Notice of Allowance and Fee(s) Due mailed in this case did not require the submission of a publication fee. Therefore, a Publication Fee is being charged to deposit account no. 12-0555 pursuant to the general authorization included on the Fee Transmittal. If publication of the application does not occur, applicant may file a request for a refund after the patent issues. *See* 37 CFR 1.211(e).

Petitioner has appointed a representative to conduct all business before the U.S. Patent and Trademark Office (Office). The Office will not engage in dual correspondence with petitioner and petitioner's representative. Accordingly, petitioner must conduct all future correspondence with this Office through the representative of record. If petitioner no longer wishes to be represented by the representative of record, then a revocation of the power of attorney or patent agent should be submitted. A correspondence address must be included on the correspondence instructing the Office where all future communications are to be mailed. *See* 37 CFR 1.33(a).

This application is being forwarded to the Office of Data Management for further processing.

Telephone inquiries concerning this decision should be directed to the undersigned at (571) 272- 3215.

Charlema Grant

Charlema Grant
Petitions Attorney
Office of Petitions

ATTACHMENT: Notice Regarding Rescission of Nonpublication Request

Cc: Timothy R. Pryor
910 Monmouth Road
Windsor, Ontario N8Y 3L7
Canada

UNITED STATES PATENT AND TRADEMARK OFFICE

UNITED STATES DEPARTMENT OF COMMERCE
United States Patent and Trademark Office
Address: COMMISSIONER FOR PATENTS
P.O. Box 1450
Alexandria, Virginia 22313-1450
www.uspto.gov

APPLICATION NUMBER	FILING OR 371(C) DATE	FIRST NAMED APPLICANT	ATTY. DOCKET NO./TITLE
10/611,814	07/02/2003	Timothy R. Pryor	P07679US02/RFH

CONFIRMATION NO. 5041

881
STITES & HARBISON PLLC
1199 NORTH FAIRFAX STREET
SUITE 900
ALEXANDRIA, VA 22314

NONPUBLICATION RESCISSION LETTER

OC000000033700541

Date Mailed: 12/18/2008

Communication Regarding Rescission Of Nonpublication Request and/or Notice of Foreign Filing

Applicant's rescission of the previously-filed nonpublication request and/or notice of foreign filing is acknowledged. The paper has been reflected in the Patent and Trademark Office's (USPTO's) computer records so that the earliest possible projected publication date can be assigned.

The projected publication date is 03/26/2009.

If applicant rescinded the nonpublication request before or on the date of "foreign filing,"[1] then no notice of foreign filing is required.

If applicant foreign filed the application after filing the above application and before filing the rescission, and the rescission did not also include a notice of foreign filing, then a notice of foreign filing (not merely a rescission) is required to be filed within 45 days of the date of foreign filing. See 35 U.S.C. § 122(b)(2)(B)(iii), and Clarification of the United States Patent and Trademark Office's Interpretation of the Provisions of 35 U.S.C. § 122(b)(2)(B)(ii)-(iv), 1272 Off. Gaz. Pat. Office 22 (July 1, 2003).

If a notice of foreign filing is required and is not filed within 45 days of the date of foreign filing, then the application becomes abandoned pursuant to 35 U.S.C. § 122(b)(2)(B)(iii). In this situation, applicant should either file a petition to revive or notify the Office that the application is abandoned. See 37 CFR 1.137(f). Any such petition to revive will be forwarded to the Office of Petitions for a decision. Note that the filing of the petition will not operate to stay any period of reply that may be running against the application.

Questions regarding petitions to revive should be directed to the Office of Petitions at (571) 272-3282.

[1] Note, for purpose of this notice, that "foreign filing" means "filing an application directed to the same invention in another country, or under a multilateral international agreement, that requires publication of applications 18 months after filing".

/crgrant/

Office of Data Management, Application Assistance Unit (571) 272-4000, or (571) 272-4200, or 1-888-786-0101

UNITED STATES PATENT AND TRADEMARK OFFICE

Commissioner for Patents
United States Patent and Trademark Office
P.O. Box 1450
Alexandria, VA 22313-1450
www.uspto.gov

ROSENBERG, KLEIN & LEE
3458 ELLICOTT CENTER DRIVE
UITE 101
ELLICOTT CITY, MD 21043

COPY MAILED

DEC 2 0 2007

OFFICE OF PETITIONS

In re Application of	:	
Yu-Chou Lee, et al.	:	
Application No. 10/611,896	:	DECISION ON PETITION
Filed: July 3, 2003	:	
Attorney Docket No. MR3029-77	:	

This is a decision on the petition under the unintentional provisions of 37 CFR 1.137(b), filed November 2, 2006 and supplemented on November 23, 2007, to revive the above-identified application.

The petition is **GRANTED**.

The application became abandoned for failure s to timely pay the issue and publication fees on or before September 18, 2006, as required by the Notice of Allowance and Fee(s) Due, mailed June 16, 2006, which set a statutory period for reply of three (3) months. Accordingly, the application became abandoned on September 19, 2006.

The petition satisfies the requirements of 37 CFR 1.137(b) in that petitioner has supplied (1) the reply in the form of payment of the issue fee of $1400 and the publication fee of $300, (2) the petition fee of $1500; and (3) a proper statement of unintentional delay.

Telephone inquiries concerning this decision should be directed to undersigned at (571) 272-1642.

This application is being referred to Publishing Division for processing into a patent.

April M. Wise
Petitions Examiner
Office of Petitions

UNITED STATES PATENT AND TRADEMARK OFFICE

Commissioner for Patents
United States Patent and Trademark Office
P.O. Box 1450
Alexandria, VA 22313-1450
www.uspto.gov

Paper No. 012305

ANDREW S. BRENC
8925 LITTLETON STREET
FAIRFAX, VA 22032

FEB 4 2005

In re Application of:	:	
BAMDAD BAHAR	:	
Serial No.: 10/611,904	:	DECISION ON REQUEST TO WITHDRAW
Filed: 07/03/2003	:	FROM RECORD
Attorney Docket No.: **1002.001**	:	

This is a decision on the request to withdraw as attorney/agent of record under 37 C.F.R. § 1.36, filed September 30, 2004.

A grantable request to withdraw as attorney of record must be signed by every attorney seeking to withdraw or contain a clear indication that one attorney is signing on behalf of others. A request to withdraw will not be approved unless at least thirty (30) days would remain between the date of approval and the later of the expiration date of a time to file a response or the expiration date of the maximum time period, which can be extended under 37 C.F.R. § 1.136(a).

The request meets all the above stated requirements. The request was signed by Andrew S. Brenc, on behalf of himself and all the attorneys/agents of record.

The request is **APPROVED**.

There are no attorneys of record at this time.

All future communications from the Office will be directed to the inventor, Bamdad Bahar, at the below address, until otherwise notified by applicant.

Inquiries related to this decision should be directed to Jose G. Dees (571) 272-1569.

Jose G. Dees, Special Programs Examiner
Technology Center 2800
Semiconductors, Electrical and Optical
Systems and Components

cc: BAMDAD BAHAR
809 NORMAN ESBRIDGE HIGHWAY
SEAFORD, DE 19947

UNITED STATES PATENT AND TRADEMARK OFFICE

COMMISSIONER FOR PATENTS
UNITED STATES PATENT AND TRADEMARK OFFICE
P.O. BOX 1450
ALEXANDRIA, VA 22313-1450
www.uspto.gov

FEB 10 2004

SHERMAN & SHALLOWAY
413 N. WASHINGTON STREET
ALEXANDRIA VA 22313

In re Application of	:
Eyal Taylor.	:
Serial No.: 10/611,914	: PETITION TO MAKE SPECIAL
Filed: July 3, 2003	:
Attorney Docket No.: CS-120	:

This is in response to applicants' petition filed July 30, 2003, to make the above-identified application special under the provisions of 37 CFR 1.102(d). The delay in acting on this petition is regretted.

Applicant has satisfied the provisions set forth in M.P.E.P. 708.02, X. Therefor the petition is **GRANTED**.

The application will be forwarded to the examiner for action on the merits commensurate with this decision.

Should there be any questions with regard to this letter please contact William R. Dixon, Jr. by letter addressed to the Director, Technology Center 1600, P.O. Box 1450, Alexandria, VA 22313-1450, or by telephone at 571-272-0519 or by facsimile transmission to the Office general facsimile number.

William R. Dixon, Jr.
Special Program Examiner
Technology Center 1600

UNITED STATES PATENT AND TRADEMARK OFFICE

Commissioner for Patents
United States Patent and Trademark Office
P.O. Box 1450
Alexandria, VA 22313-1450
www.uspto.gov

OLIFF & BERRIDGE, PLC
P O BOX 19928
ALEXANDRIA, VA 22320

COPY MAILED

FEB 07 2007

OFFICE OF PETITIONS

In re Application of
Takashi Igarashi et al
Application No. 10/611,918
Filed: July 3, 2003
Attorney Docket No. 108833.01

DECISION GRANTING PETITION
UNDER 37 CFR 1.313(c)(2)

This is a decision on the petition, filed February 6, 2007, under 37 CFR 1.313(c)(2) to withdraw the above-identified application from issue after payment of the issue fee.

The petition is **GRANTED**.

The above-identified application is withdrawn from issue for consideration of a submission under 37 CFR 1.114 (request for continued examination). See 37 CFR 1.313(c)(2).

Petitioner is advised that the issue fee paid on January 8, 2007 in the above-identified application cannot be refunded. If, however, the above-identified application is again allowed, petitioner may request that it be applied towards the issue fee required by the new Notice of Allowance.[1]

Telephone inquiries should be directed to the undersigned at (571) 272-3218.

This matter is being referred to Technology Center AU 3723 for processing of the request for continued examination under 37 CFR 1.114 and for consideration of the Information Disclosure Statement.

Frances Hicks
Petitions Examiner
Office of Petitions

C:\Documents and Settings\FHicks\My Documents\470\Feb10\611918.wpd

---

[1] *The request to apply the issue fee to the new Notice may be satisfied by completing and returning the new Part B – Fee(s) Transmittal Form (along with any balance due at the time of submission). Petitioner is advised that the Issue Fee Transmittal Form must be completed and timely submitted to avoid abandonment.*

UNITED STATES PATENT AND TRADEMARK OFFICE

Commissioner for Patents
United States Patent and Trademark Office
P.O. Box 1450
Alexandria, VA 22313-1450
www.uspto.gov

BIRCH STEWART KOLASCH & BIRCH
PO BOX 747
FALLS CHURCH VA 22040-0747

COPY MAILED

SEP 30 2005

OFFICE OF PETITIONS

In re Patent No. 6,910,751	:	
Application No. 10/611,935	:	
Filed: July 3, 2003	:	ON PETITION
Issued: June 28, 2005	:	
Attorney Docket No. 0142-0417P	:	

This is a decision on the petition filed September 12, 2005, which is being treated as a request under 37 CFR 3.81[1] to correct the assignee on the front page of the above-identified patent by way of a Certificate of Correction.

The request under 37 CFR 3.81 is **GRANTED**.

The requisite fee for a request under 37 CFR 3.81 is only $130.00. Petitioner submitted $400.00. Accordingly, $270.00 will be credited to petitioner's deposit account as authorized.

Telephone inquiries should be directed to Paralegal Liana Chase at (571) 272-3282. Any questions concerning the issuance of the Certificate of Correction should be directed to the Certificate of Corrections Branch at (703) 305-8309.

This matter is being referred to the Certificates of Correction Branch for issuance of the requested Certificate of Correction.

Frances Hicks
Petitions Examiner
Office of Petitions

[1] See Official Gazette of June 22, 2004

UNITED STATES PATENT AND TRADEMARK OFFICE

Commissioner for Patents
United States Patent and Trademark Office
P.O. Box 1450
Alexandria, VA 22313-1450
www.uspto.gov

STAAS & HALSEY LLP
SUITE 700
1201 NEW YORK AVENUE, N.W.
WASHINGTON DC 20005

COPY MAILED

OCT 1 4 2008

OFFICE OF PETITIONS

In re Application of:
KURTENBACH, Gordon P.
Application No.: 10/611,960
Filed: July 3, 2003
Attorney Docket No.: 1500.1005CDC

DECISION APPROVING
WITHDRAWAL OF ATTORNEY

This is a decision on the Request to Withdraw as Attorney/Agent of Record under 37 CFR § 1.36, filed October 2, 2008.

The Request is **APPROVED**.

Debra K. Stephens requests that she alone be withdrawn as an attorney under 37 CFR § 1.36, pursuant to the reason set forth under 37 CFR § 10.40(b)(2), because of her current employment by the United States Patent and Trademark Office. Since the Request satisfies all of the requirements for withdrawal, it is appropriate to approve the Request and withdraw only Ms. Stephens as an attorney of record.

All future communications from the Office will continue to be directed to the above-identified correspondence address.

A courtesy copy of this decision is being mailed to Ms. Stephens at the address identified in the Request.

Telephone inquiries relating to this decision should be directed Brian W. Brown at (571) 272-5338.

Brian W. Brown
Petitions Examiner
Office of Petitions

Cc: Debra K. Stephens
301 Edgemore Avenue
Cary, NC 27519

UNITED STATES PATENT AND TRADEMARK OFFICE

Commissioner for Patents
United States Patent and Trademark Office
P.O. Box 1450
Alexandria, VA 22313-1450
www.uspto.gov

FINNEGAN, HENDERSON, FARABOW,
GARRETT & DUNNER LLP
901 NEW YORK AVENUE, NW
WASHINGTON DC 20001-4413

COPY MAILED

AUG 27 2009

OFFICE OF PETITIONS

In re Application of	:	
Burgaud et al.	:	
Application No. 10/611,968	:	LETTER REGARDING
Filed: July 3, 2003	:	PATENT TERM ADJUSTMENT
Atty Docket No. 06028.0020-00	:	

This letter is in response to the "NOTICE OF POSSIBLE PTO ERROR IN THE DETERMINATION OF PATENT TERM ADJUSTMENT AND REQUEST FOR REVIEW OF CALCULATION" filed June 22, 2009. Pursuant to their duty of good faith and candor to the Office, applicants note that the seven hundred eighty-seven (787) days of Patent Term Adjustment indicated on the Notice of Allowance mailed May 15, 2009 disagrees with their own calculation.

The request for correction of the initial determination of patent term adjustment (PTA) is **GRANTED.**

The Office has updated the PALM screen to reflect that the correct Patent Term Adjustment determination at the time of the mailing of the Notice of Allowance is seven hundred fifty-six (756) days. A copy of the updated PALM screen, showing the corrected determination, is enclosed.

On May 15, 2009, the Office mailed the Determination of Patent Term Adjustment under 35 U.S.C. 154(b) in the above-identified application. The Notice stated that the patent term adjustment to date is 787 days. Applicants state the Patent Term Adjustment on the Notice of Allowance disagrees with their calculation because the Office erroneously entered an October 29, 2003 mail date, rather than the correct mail date of September 29, 2003, for a Notice to File Missing Parts of Nonprovisional Application in the Office's Patent Term Adjustment History.

A review of the record reveals that the initial determination of patent term adjustment of 787 days is incorrect. Pursuant to 37 CFR 1.704(b), a period of reduction of 91 days, rather than 60 days, should have been entered in connection with March 29, 2004 reply to the September 29, 2003 Notice to File Missing Parts of Nonprovisional Application. 37 CFR 1.704(b) provides that:

> With respect to the grounds for adjustment set forth in §§ 1.702(a) through (e), and in particular the ground of adjustment set forth in § 1.702(b), an applicant shall be deemed to have failed to engage in reasonable efforts to conclude processing or examination of an application for the cumulative total of any periods of time in excess of three months that are taken to reply to any notice or action by the Office making any rejection, objection, argument, or other request, measuring such three-month period from the date the notice or action was mailed or given to the applicant, in which case the period of adjustment set forth in § 1.703 shall be reduced by the number of days, if any, beginning on the day after the date that is three months after the date of mailing or transmission of the Office communication notifying the applicant of the rejection, objection, argument, or other request and ending on the date the reply was filed. The period, or shortened statutory period, for reply that is set in the Office action or notice has no effect on the three-month period set forth in this paragraph.

In this instance, applicants did fail to engage in reasonable efforts to conclude processing of the application by failing to reply to the Notice to File Missing Parts of Application mailed September 29, 2003 within the three-month period provided for in 37 CFR 1.704(b). Applicants did not file a complete and proper response until March 29, 2004. Accordingly, a period of reduction of 91 days is being entered for the period beginning on December 30, 2003, the day after the date that is three months after the date of mailing of the Notice, and ending on March 29, 2004, the date applicants' reply was filed.

In view thereof, the determination of Patent Term Adjustment at the time of the mailing of the notice of allowance is seven hundred fifty-six (756) days (998 days of Office delay reduced by 242 (91+ 62+89) days of applicant delay).

As this letter was submitted as an advisement to the Office of an error in Applicants' favor, the Office will not assess the $200.00 fee under 37 CFR 1.18(e). The Office thanks applicants for their good faith and candor in bringing this to the attention of the Office.

The Office of Data Management has been advised of this decision. The application is, thereby, forwarded to the Office of Data Management for issuance of the application. The patent term adjustment indicated on the patent (as shown on the Issue Notification mailed about three weeks prior to patent issuance) will include any additional adjustment accrued both for Office delay in issuing the patent more than four months after payment of the issue fee and satisfaction of all outstanding requirements, and for the Office taking in excess of three years to issue the patent (to the extent that the three-year period does not overlap with periods already accorded).

Telephone inquiries specific to this matter should be directed to Senior Petitions Attorney Shirene Willis Brantley at (571) 272-3230.

Nancy Johnson
Senior Petitions Attorney
Office of Petitions

Enclosure: Copy of adjusted PALM calculation

Day : Wednesday

PALM INTRANET

Date: 8/26/2009
Time: 17:19:59

PTA Calculations for Application: 10/611968			
Application Filing Date:	07/03/2003	PTO Delay (PTO):	998
Issue Date of Patent:		Three Years:	0
Pre-Issue Petitions:	0	Applicant Delay (APPL):	211
Post-Issue Petitions:	0	Total PTA (days):	756
PTO Delay Adjustment:	-31		

File Contents History

Number	Date	Contents Description	PTO	APPL	START
83	08/26/2009	ADJUSTMENT OF PTA CALCULATION BY PTO		91	
82	08/26/2009	ADJUSTMENT OF PTA CALCULATION BY PTO	60		
72	05/15/2009	MAIL NOTICE OF ALLOWANCE			
71	05/13/2009	ISSUE REVISION COMPLETED			
70	05/13/2009	DOCUMENT VERIFICATION			
69	05/13/2009	NOTICE OF ALLOWANCE DATA VERIFICATION COMPLETED			
68	05/13/2009	EXAMINER'S AMENDMENT COMMUNICATION			
67	05/13/2009	NOTICE OF ALLOWABILITY			
66	05/01/2009	MAIL BPAI DECISION ON APPEAL - REVERSED	680		41
65	04/30/2009	BPAI DECISION - EXAMINER REVERSED			
64	03/18/2009	CONFIRMATION OF HEARING BY APPELLANT			
63	02/26/2009	NOTIFICATION OF APPEAL HEARING			
61	12/04/2008	DOCKETING NOTICE MAILED TO APPELLANT			
60	12/03/2008	ASSIGNMENT OF APPEAL NUMBER			
59	08/18/2008	APPEAL AWAITING BPAI DOCKETING			
58	04/23/2008	MAIL REPLY BRIEF NOTED BY EXAMINER			
57	04/23/2008	REPLY BRIEF NOTED BY EXAMINER			
56	04/21/2008	DATE FORWARDED TO EXAMINER			
55	01/18/2008	REPLY BRIEF FILED			
54	01/18/2008	REQUEST FOR ORAL HEARING			
53	12/11/2007	EXAM. ANS. REVIEW COMPLETE			
52	11/21/2007	MAIL EXAMINER'S ANSWER			
51	11/20/2007	EXAMINER'S ANSWER TO APPEAL BRIEF			
50	10/05/2007	CASE DOCKETED TO EXAMINER IN GAU			
49	09/28/2007	APPEAL BRIEF REVIEW COMPLETE			

48	09/28/2007	DATE FORWARDED TO EXAMINER			
47	09/06/2007	APPEAL BRIEF FILED			
46	09/06/2007	REQUEST FOR EXTENSION OF TIME - GRANTED			
45	08/08/2007	NOTICE -- DEFECTIVE APPEAL BRIEF			
44	07/17/2007	APPEAL BRIEF REVIEW COMPLETE			
43	07/17/2007	DATE FORWARDED TO EXAMINER			
42.1	06/22/2007	DEFECTIVE / INCOMPLETE APPEAL BRIEF FILED			
42	06/22/2007	APPEAL BRIEF FILED			
41	06/22/2007	NOTICE OF APPEAL FILED			
40	03/22/2007	MAIL NON-FINAL REJECTION			
39	03/16/2007	NON-FINAL REJECTION			
38	03/08/2007	DATE FORWARDED TO EXAMINER			
37	03/01/2007	RCE- AF PROCESSED			
36	03/08/2007	DATE FORWARDED TO EXAMINER			
35	03/01/2007	REQUEST FOR CONTINUED EXAMINATION (RCE)			
34	03/08/2007	DISPOSAL FOR A RCE/CPA/129 (EXPRESS ABANDONMENT IF CPA)			
33	03/01/2007	REQUEST FOR EXTENSION OF TIME - GRANTED			
32	03/01/2007	WORKFLOW - REQUEST FOR RCE - BEGIN			
31	08/18/2006	MAIL ADVISORY ACTION (PTOL - 303)			
30	08/16/2006	ADVISORY ACTION (PTOL-303)			
29	08/10/2006	DATE FORWARDED TO EXAMINER			
28	08/04/2006	AMENDMENT/ARGUMENT AFTER NOTICE OF APPEAL			
27	08/04/2006	NOTICE OF APPEAL FILED		89	25
26	08/04/2006	REQUEST FOR EXTENSION OF TIME - GRANTED			
25	02/07/2006	MAIL FINAL REJECTION (PTOL - 326)			
24	02/03/2006	FINAL REJECTION			
23	12/29/2005	DATE FORWARDED TO EXAMINER			
22	12/19/2005	RESPONSE AFTER NON-FINAL ACTION		62	20
21	12/19/2005	REQUEST FOR EXTENSION OF TIME - GRANTED			
20	07/18/2005	MAIL NON-FINAL REJECTION	318		-1
19	07/15/2005	NON-FINAL REJECTION			

18	04/08/2005	CORRESPONDENCE ADDRESS CHANGE			
17	04/20/2004	IFW TSS PROCESSING BY TECH CENTER COMPLETE			
16	04/20/2004	CASE DOCKETED TO EXAMINER IN GAU			
15.7	07/03/2003	INFORMATION DISCLOSURE STATEMENT (IDS) FILED			
15	07/03/2003	INFORMATION DISCLOSURE STATEMENT (IDS) FILED			
12	04/08/2004	APPLICATION RETURN FROM OIPE			
11	04/08/2004	APPLICATION RETURN TO OIPE			
10	04/07/2004	APPLICATION DISPATCHED FROM OIPE			
9	04/08/2004	APPLICATION IS NOW COMPLETE			
8	03/29/2004	ADDITIONAL APPLICATION FILING FEES		60	6
7	03/29/2004	A STATEMENT BY ONE OR MORE INVENTORS SATISFYING THE REQUIREMENT UNDER 35 USC 115, OATH OF THE APPLIC			
6	10/29/2003	NOTICE MAILED--APPLICATION INCOMPLETE--FILING DATE ASSIGNED			
4	09/17/2003	CASE CLASSIFIED BY OIPE			
3	09/17/2003	CLEARED BY OIPE CSR			
2	09/04/2003	IFW SCAN & PACR AUTO SECURITY REVIEW			
1	07/03/2003	INITIAL EXAM TEAM NN			

Search Another: Application# Search

EXPLANATION OF PTA CALCULATION

EXPLANATION OF PTE CALCULATION

To go back, right click here and select Back. To go forward, right click here and select Forward. To refresh, right click here and select Refresh.

Back to OASIS | Home page

UNITED STATES PATENT AND TRADEMARK OFFICE

Commissioner for Patents
United States Patent and Trademark Office
P.O. Box 1450
Alexandria, VA 22313-1450
www.uspto.gov

JUN 15 2005

EDWARD D. GRIEFF
HALE & DORR, LLP
1455 PENNSYLVANIA AVE, NW
WASHINGTON, DC 20004

In re Application of	:
Richard A. Earl et al	:
Serial No.: 10/612,014	: PETITION DECISION
Filed: July 3, 2003	:
Attorney Docket No.: 102258.156	:

This is in response to the petition under 37 CFR 1.144, filed March 30, 2005, requesting withdrawal of an improper restriction requirement.

BACKGROUND

A review of the file history shows that this application was filed under 35 U.S.C. 111 on July 3, 2003, and contained claims 1-58. In a first Office action, mailed May 27, 2004, the examiner set forth a restriction requirement, as follows:

Group I – Claims 1-5, 51, 55-56 and 58, drawn to compounds of formula I or II and its compositions;
Group II – Claims 6-15, drawn to a method of using the compounds of formula I or II;
Group III – Claims 16-17, 29-39, 57 and 52-54, drawn to a multiple active ingredient composition; and
Group IV – Claims 18-28 and 40-50, drawn to a method of using the multiple active ingredient compounds.

In addition, election of a single species within whichever group was elected was required. The examiner further indicated that upon election of a single species the Office would review the election and determine the scope of compounds to be examined. The examiner also noted that process claims having the same scope as allowable product claims would be rejoined if product claims were elected for prosecution.

Applicants replied on June 17, 2004, electing Group I and the species of Example 20 with traverse, and proposing a modified restriction requirement based on Formula I (Group I) and Formula II (Group II). Applicants argued that this would be less burdensome to the examiner for search and examination.

The examiner mailed a second restriction requirement to applicants on September 3, 2004, in which a 57 way restriction requirement (not reproduced herein) was set forth. The examiner argued that the compounds of Groups 1-27 of Formula I and Groups 27 (sic 28)-35 of Formula II were chemically, physically and patentably distinct; that the inventions of Groups 1-35 and 36-41 were related as product and process of use; and inventions 42 or 49-50 and inventions 43-48 or 51-56 were also related as product and process of use. Election of species was required for certain groups.

Applicants replied on October 27, 2004, electing Group 10 and the species of Example 20, and vigorously traversing the requirement as improper as the compounds of Formula I and the compounds of Formula II are closely related and not patentably distinct.

On December 30, 2004, the examiner mailed an Office action to applicants responding to the traversal, but maintaining the requirement due to the wide disparity among the various groups and limiting the search and examination to only a part of claims 1-4 and 50 (a portion of the elected Group 10). Claims 1-4 were then rejected under 35 U.S.C., first paragraph as lacking written description, and under 35 U.S.C. 112, second paragraph, as being indefinite. Claim 50 was objected to as depending from a rejected claim.

Applicants replied to the Office action on March 30, 2005, by making a minor amendment to the specification, and amending claims 1, 3 and 55, and responding to the rejections. This petition was filed concurrently.

DISCUSSION

A review of applicants' claims shows that they are directed first to compounds and/or compositions relating to Formula I or Formula II or kit containing the compound/composition. Second, they are directed to the combination of the compounds of Formula I or Formula II combined with another active ingredient. Lastly, the claims are directed to treating numerous diseases or conditions, both related and unrelated, with the compounds/compositions.

A review of Formula I shows that the compound is R_n-C(H)(R_m)-C(=O)-X, where R_m is H or a lower alkyl group. R_n is defined as 51 different and mostly unrelated ring structures, both carbocyclic and heterocyclic, fused and non-fused. X is defined as 44 different chains having as many as 4 variables and bonded to the C(=O) atom through O, S or N (a total of 79 different bonded chain structures), many having a ring embedded in the chain which may be carbocyclic, heterocyclic, alkyl or aryl. Thus the only structure common to all compounds of Formula I is the C(H)(R_m)-C(=O) structure. Such cannot be considered a significant structure for the multitude of compounds encompassed by the formula nor has it been shown that the compound's activity is directly related to this structure. Formula II is similar in that only a "C(=O)" forms the structure common to all structures (the CHR_m portion of Formula I is eliminated). It is also noted that applicants' claim 1 contains at least 82 specific compounds (identified by ACS Registry number only) or groups of compounds for Formula I which are excluded and at least 56 specific compounds (also identified by ACS Registry number) which are specifically excluded for Formula II. This exclusionary language muddies the scope of the Markush group set forth

leaving the examiner little choice but to carve the improper Markush Group into understandable and recognizable groups based, in this instance, on the various R_n ring structures which do provide a large number common structures each forming an individual Markush group.

A proper Markush group is formed when a group of compounds (or compositions) has a significant portion of their structure in common and the activity or property claimed is directly related to that structure. For instance, steroids have a large portion of their structure in common (usually 4 or 5 fused rings) and the only difference is in the radicals attached thereto. However the primary activity of steroid compounds is based on or linked to the fused ring structure with the radicals only modifying that activity.

The examiner's initial restriction requirement between Formula I and Formula II compounds and the methods related thereto was not improper and generally agreed to by applicants in their first reply and election wherein they suggested that the method and compound claims should be rejoined and examined together. Upon further consideration the examiner determined that Formula I and Formula II related to so many different basic compounds that further restriction was warranted. Thus the examiner's dividing claim 1 into 27 groups based on the various ring structure for R_n of Formula I and 8 Groups for Formula II based on R_k ring structures with Groups 36-57 (later reduced to 56) directed to methods and compositions containing additional active ingredients is not unreasonable. The only error made by the examiner is in stating that upon election of a single species within the Group elected the scope of applicants' invention would be determined. Such is not permitted. Once a Group is elected and a species identified from which examination may begin, if no prior art is found upon which the elected species may be held unpatentable, the examiner must follow M.P.E.P. 803.02 and expand the search and examination to additional species until a reasonable number have been considered. Should no prior art be found on any of the additional species, the entire Group would be considered to avoid the prior art and the claims of the elected Group would be further examined to determine compliance with respect to all other aspects of the statute .

Applicants' arguments are directed to showing that all of the compounds of Formula I are related by stating that all are "nitrosated non-steroidal anti-inflamatory compounds". However, the common structure noted above does not contain a nitroso radical. The nitroso portion is located on the R_n portion of the compounds which can be markedly different. Applicants further argue that the examiner must show different classifications for the identified groups, different fields of search or separate status in the art. As shown in the second restriction requirement, the various groups are classified properly in several different classes and various subclasses within each class. The various classifications are indicative of a widely divergent search for the compounds as well as showing that they are not closely related.

Also noted (and requested by applicants) by the examiner is that method claims of the same scope as an allowable compound/composition claim (Group elected) will be rejoined upon a finding of allowability of the compound/composition claim and they will then be fully examined for compliance with all other applicable portions of the statute. Such could also be extended to those claims containing additional active ingredients.

DECISION

The petition is **DENIED** except that the examiner will follow the guidelines of M.P.E.P. 803.02 in conjunction with the election of species search and examination practice.

The application will be forwarded to the examiner for further consideration not inconsistent with this decision.

Should there be any questions about this decision please contact William R. Dixon, Jr., by letter addressed to Director, TC 1600, at the address listed above, or by telephone at 571-272-0519 or by facsimile sent to the general Office facsimile number, 571-273-8300.

Bruce M. Kisliuk
Director, Technology Center 1600

UNITED STATES PATENT AND TRADEMARK OFFICE

Commissioner for Patents
United States Patent and Trademark Office
P.O. Box 1450
Alexandria, VA 22313-1450
www.uspto.gov

2-10-05

In re Application of Lawnie H. Taylor Serial Number: 10/612,016 Filed: July 3, 2003 For: PROCESS METHODS AND EQUIPMENT FOR REMOVING STAINS FROM FABRICS	:	ap PETITION UNDER M.P.E.P.708.02 IV

This is in response to the petition filed July 3, 2003, requesting that the above-identified application be granted Special Status under Sections 708.02 IV of the MPEP and 37 CFR 1.102 (**no fee required**).

The request for Special Status considered under Section 708.02 IV has not been granted because criteria under 37 CFR 1.102 has not been met. Specifically, evidence such as a birth certificate or a statement by applicant is required to show applicant is 65 years, or more, in age; a statement by the petitioner is not sufficient to meet this requirement.

Accordingly the petition is **DENIED.**

William Krynski, Special Programs Examiner
Technology Center 1700
Chemical and Materials Engineering

Dorsey & Whitney LLP
101 Pennsylvania Avenue, N.W.
Washington, D.C. 20004

UNITED STATES PATENT AND TRADEMARK OFFICE

Commissioner for Patents
United States Patent and Trademark Office
P.O. Box 1450
Alexandria, VA 22313-1450
www.uspto.gov

MAR 30 2005

Cislo & Thomas LLP
233 Wilshire Boulevard
Suite 900
Santa Monica, CA 90401

In re Application of	:	
Yan, Suen Ching	:	
Serial No.: 10/612,023	:	DECISION ON PETITION
Filed: July 1, 2003	:	
For: Lighted Headwear	:	

This is in response to the petition applicant filed on July 1, 2003 to make the above-identified application special under the provisions of 37 CFR 1.102(d).

Applicant has satisfied the provisions set forth in M.P.E.P. 708.02, VIII, thus the petition is **GRANTED**.

The application will be forwarded to the examiner for action on the merits commensurate with this decision.

Should there be any questions with regard to this letter please contact Richard Bertsch by letter addressed to the Director, Technology Center 3700, P.O. Box 1450 Alexandria, VA 22313-1450, or by telephone at (571) 272-4050 or by facsimile transmission at (703) 872-9306.

Richard A. Bertsch

Richard A. Bertsch, Director
Technology Center 3700

UNITED STATES DEPARTMENT OF COMMERCE
COMMISSIONER FOR PATENTS
P. O. BOX 1450
ALEXANDRIA, VA 22313-1450

Date : 5/30/2008
Patent No. : 7,186,073 B1
Inventor(s) : TAM et al.
Issue Date : March 6, 2007
Title : **ON PRIORITIZED PDL SEGMENTATION PRODUCING TWO BIT SELECTOR**
Doc./File No. : 117290

Re: Certificate of Correction

Consideration has been given your request for a certificate of correction, for the above-identified patent under the provisions of Rule 1.322 and 1.323.

Respecting the alleged error the addition or deletion of inventor(s), the inventors' names are printed in accordance with the Declaration and/or Supplemental Declaration. Therefore, no correction is in order here under Rules 1.322 or 1.323.

In view of the foregoing, your request is hereby denied.

However, your attention is directed to C.F.R. 1.324, wherein a request is being made to add or delete inventor(s), after issuance of the patent.

A petition under C.F.R. 1.182 is required to correct the alleged errors in incorrect inventor's name or order of inventor's names, since inventors' names are printed solely in accordance with the typed/printed names (not the signatures) on the Declaration or Oath. Therefore, no correction is in order here under the provisions of Rule 1.322 or 1.323 (required fee currently $100), unless a petition is granted.

Any petition under 37 CFR 1.182 (required fee currently $130) should be directed to the attention of the Assistant Commissioner for Patents, using the following mailing address or FAX number.

By Mail: Commissioner of Patents
P.O. Box 1450
Alexandria, VA 22313-1450

By Fax: (703) 308-6916
Attn.: Office of Petitions

Further correspondence concerning this matter should be filed and directed to Decisions & Certificates of Correction Branch.

Ernest C. White, *LIE* (703) 308-9390 x122
Mary F. Diggs, *Supervisor* (703) 308-9390 x125
Decisions & Certificates of Correction Branch

OLIFF & BERRIDGE, PLC
P.O. BOX 19928
ALEXANDRIA VA 22320

ecw

UNITED STATES PATENT AND TRADEMARK OFFICE

UNITED STATES DEPARTMENT OF COMMERCE
United States Patent and Trademark Office
Address: COMMISSIONER FOR PATENTS
P.O. Box 1450
Alexandria, Virginia 22313-1450
www.uspto.gov

INTEL/BSTZ
BLAKELY SOKOLOFF TAYLOR & ZAFMAN LLP
1279 OAKMEAD PARKWAY
SUNNYVALE, CA 94085-4040

Mail Date: 05/17/2010

Applicant	: Eric L. Debes	: DECISION ON REQUEST FOR
Patent Number	: 7631025	: RECALCULATION of PATENT
Issue Date	: 12/08/2009	: TERM ADJUSTMENT IN VIEW
Application No	: 10/612,061	: OF WYETH AND NOTICE OF INTENT TO
Filed	: 06/30/2003	: ISSUE CERTIFICATE OF CORRECTION
		:

The Request for Recalculation is **GRANTED** to the extent indicated.

The patent term adjustment has been determined to be **889** days. The USPTO will *sua sponte* issue a certificate of correction reflecting the amount of PTA days determined by the recalculation.

Prior to the issuance of the certificate of correction, the USPTO will afford patentee an opportunity to be heard and request reconsideration. Accordingly, patentee has **one month or thirty (30) days**, whichever is longer, to file a request for reconsideration of this patent term adjustment calculation. See 35 U.S.C. 154(b)(3)(B)(ii) and 37 CFR 1.322(a)(4). No extensions of time will be granted under 37 CFR 1.136.

Patentee should use document code PET.OP if electronically filing a request for reconsideration of this patent term adjustment calculation. The patentee must also include the information required by 37 CFR 1.705(b)(2) and the fee required by 37 CFR 1.18(e). If patentee does not file a timely request for reconsideration of this patent term adjustment calculation including the information required by 37 CFR 1.705(b)(2) and the fee required by 37 CFR 1.18(e), the USPTO will issue a certificate of correction reflecting the PTA determination noted above.

Patentee should be aware that in order to preserve the right to review in the United States District Court for the District of Columbia of the USPTO patent term adjustment determination, patentee must ensure that he or she also take the steps required under 35 U.S.C. 154(b)(4)(A) in a timely manner. Nothing in the request for recalculation should be construed as providing an alternative time frame for commencing a civil action under 35 U.S.C. 154(b)(4)(A).

Any questions concerning this decision should be directed to the Office of Patent Legal Administration at 571-272-7702.

UNITED STATES PATENT AND TRADEMARK OFFICE

UNITED STATES DEPARTMENT OF COMMERCE
United States Patent and Trademark Office
Address: COMMISSIONER FOR PATENTS
P.O. Box 1450
Alexandria, Virginia 22313-1450
www.uspto.gov

Kenneth J. Collier
Medtronic, Inc.
710 Medtronic Parkway N.E.
Minneapolis, MN 55432

Mail Date: 04/21/2010

Applicant	: Peter Paul Zilla	: DECISION ON REQUEST FOR
Patent Number	: 7632306	: RECALCULATION of PATENT
Issue Date	: 12/15/2009	: TERM ADJUSTMENT IN VIEW
Appliction No	: 10/612,082	: OF WYETH AND NOTICE OF INTENT TO
Filed	: 07/02/2003	: ISSUE CERTIFICATE OF CORRECTION
		:

The Request for Recalculation is **GRANTED** to the extent indicated.

The patent term adjustment has been determined to be **1490** days. The USPTO will *sua sponte* issue a certificate of correction reflecting the amount of PTA days determined by the recalculation.

Prior to the issuance of the certificate of correction, the USPTO will afford patentee an opportunity to be heard and request reconsideration. Accordingly, patentee has **one month or thirty (30) days**, whichever is longer, to file a request for reconsideration of this patent term adjustment calculation. See 35 U.S.C. 154(b)(3)(B)(ii) and 37 CFR 1.322(a)(4). No extensions of time will be granted under 37 CFR 1.136.

Patentee should use document code PET.OP if electronically filing a request for reconsideration of this patent term adjustment calculation. The patentee must also include the information required by 37 CFR 1.705(b)(2) and the fee required by 37 CFR 1.18(e). If patentee does not file a timely request for reconsideration of this patent term adjustment calculation including the information required by 37 CFR 1.705(b)(2) and the fee required by 37 CFR 1.18(e), the USPTO will issue a certificate of correction reflecting the PTA determination noted above.

Patentee should be aware that in order to preserve the right to review in the United States District Court for the District of Columbia of the USPTO patent term adjustment determination, patentee must ensure that he or she also take the steps required under 35 U.S.C. 154(b)(4)(A) in a timely manner. Nothing in the request for recalculation should be construed as providing an alternative time frame for commencing a civil action under 35 U.S.C. 154(b)(4)(A).

Any questions concerning this decision should be directed to the Office of Patent Legal Administration at 571-272-7702.

UNITED STATES PATENT AND TRADEMARK OFFICE

Commissioner for Patents
United States Patent and Trademark Office
P.O. Box 1450
Alexandria, VA 22313-1450
www.uspto.gov

MAILED
FROM DIRECTORS OFFICE

NOV 03 2005

TECHNOLOGY CENTER 3600

STEPHEN E. FELDMAN, P.C.
Attorneys for Applicant(s)
12 East 41st Street
New York NY 10017

In re Application of Don Shattuck Application No. 10/612,111 Filed: July 02, 2003 For: GASKET WITH INTEGRAL CHANNEL AND PORT SEAL	: : : :	**DECISION ON PETITION TO WITHDRAW THE HOLDING OF ABANDONMENT**

This is a decision on applicant's Petition to Withdraw the Holding of Abandonment under 37 CFR 1.181 filed in the United States Patent and Trademark Office on September 09, 2005. There is no fee for this petition.

The petition is **DISMISSED**.

A review of the file record indicates that the application was held abandoned for failure to timely file a proper response to the Office action mailed July 06, 2004, which set a three-month shortened statutory period. A Notice of Abandonment was mailed on August 19, 2005. A reply was timely received on November 22, 2004, however, this reply was improper as noted in the Notice of Non-Compliant Amendment mailed January 31, 2005 which gave applicant a one-month extendable time period to correct the reply.

Petitioner contends that a response to the Notice of Non-Compliant Amendment mailed January 31, 2005 was filed on February 04, 2005. In support thereof, petitioner submits a copy of the postcard receipt bearing a USPTO stamp dated February 10, 2005. It is noted that the Application number on the copy of the response and post card receipt is 10/612,311 instead of 10/612,111.

Petitioner's evidence of a timely filing based on the postcard receipt is considered to be insufficient. In this regard, it is noted that the copy of the February 10, 2005 response is not signed and does not include a dated or executed Certificate of Mailing.

Any request for reconsideration of this decision must be submitted within TWO (2) MONTHS from the mail date of this decision. Extensions of time under 37 CFR 1.136(b) are permitted. The reconsideration request should include a cover letter entitled "Renewed Petition to Withdraw the Holding of Abandonment Under 37 CFR 1.81."

Kenneth J. Dorner
Special Programs Examiner
Patent Technology Center 3600
(571) 272-6587

KJD/rjc: 10/24/05

UNITED STATES PATENT AND TRADEMARK OFFICE

Commissioner for Patents
United States Patent and Trademark Office
P.O. Box 1450
Alexandria, VA 22313-1450
www.uspto.gov

STEPHEN E. FELDMAN, P.C.
Attorneys for Applicant(s)
12 East 41st Street
New York NY 10017

COPY MAILED

JAN 23 2006

OFFICE OF PETITIONS

In re Application of

Don Shattuck

Application No. 10/612,1111

Filed: July 2, 2003

Attorney Docket No.

DECISION ON PETITION

This is a decision on the petition under 37 CFR 1.181(a) to withdraw the holding of abandonment, filed November 17, 2005.

The petition under 37 CFR 1.181(a) to withdraw the holding of abandonment is **granted**.

This application was held abandoned on February 2, 2005, after it was believed that no response was received to the Notice of Non-Compliant Amendment mailed January 31, 2005. The notice allowed a period for reply of one (1) month from its mailing date. Extensions of the time set for reply were available pursuant to 37 CFR 1.136(a). A Notice of Abandonment was mailed on August 19, 2005, indicating that a reply to the notice was not received.

A review of the record reveals that an amendment intending to be responsive to the non-final Office action was received on February 10, 2005, as evidenced by a review of the application file record and the Office date-stamped postcard that accompanied the instant petition. Based on the aforementioned, it appears that the application was improperly held abandoned as a response was received prior to expiration of the period for reply. The holding of abandonment is withdrawn, accordingly.

Further inquires regarding this decision may be directed to the undersigned at (571) 272-3222.

The application file is being forwarded Technology Center 3600, GAU 3673, for further processing.

Kenya A. McLaughlin

Kenya A. McLaughlin
Petitions Attorney
Office of Petitions

UNITED STATES PATENT AND TRADEMARK OFFICE

Commissioner for Patents
United States Patent and Trademark Office
P.O. Box 1450
Alexandria, VA 22313-1450
www.uspto.gov
DIW Dec-06

STEPHEN E. FELDMAN, P.C.
Attorneys for Applicant(s)
12 East 41st Street
New York NY 10017

COPY MAILED
DEC 0 8 2006
OFFICE OF PETITIONS

In re Patent No. 7,097,178	:	
Issued: 29 August, 2006	:	
Application No. 10/612,111	:	ON PETITION
Filed: 2 July, 2003	:	
For: GASKET WITH INTEGRAL	:	
CHANNEL AND PORT SEAL	:	

This is a decision in reference to paper styled as a petition under 37 CFR 1.183, filed on 29 September, 2006, which is being treated as a request under 37 CFR 3.81(b)[1] to correct the assignee on the front page of the above-identified patent by way of a Certificate of Correction.

The petition is **granted**.

Petitioners should note that the processing fee for the present request is $130.00. The processing fee will be charged to counsel's deposit account.

Telephone inquires concerning this matter may be directed to the undersigned at 571.272.3231. Any questions concerning the issuance of the Certificate of Correction should be directed to the Certificates of Correction Branch at 703.305.8309.

The file is being forwarded to the Certificates of Correction Branch for issuance of the requested Certificate of Correction.

D Wood
Douglas I. Wood
Senior Petitions Attorney
Office of Petitions

[1] See Official Gazette of 22 June, 2004.

UNITED STATES PATENT AND TRADEMARK OFFICE

Commissioner for Patents
United States Patent and Trademark Office
P.O. Box 1450
Alexandria, VA 22313-1450
www.uspto.gov

EUGENE LEDONNE, ESQ.
REED SMITH, LLP
599 LEXINGTON AVENNE
29TH FLOOR
NEW YORK, NY 10022

COPY MAILED

MAR 1 1 2008

OFFICE OF PETITIONS

In re Application of
Jamie L. Brewer, et al.
Application No. 10/612,121
Filed: July 2, 2003
Attorney Docket No. 260385.20005

DECISION ON PETITION
TO WITHDRAW
FROM RECORD

This is a decision on the Request to Withdraw as attorney or agent of record under 37 C.F.R. § 1.36(b) filed November 26, 2007.

The request is **NOT APPROVED**.

A grantable request to withdraw as attorney/agent of record must be signed by every attorney/agent seeking to withdraw or contain a clear indication that one attorney is signing on behalf of another/others. A request to withdraw will not be approved unless at least 30 (thirty) days would remain between the date of approval and the later of the expiration date of a time to file a response or the expiration date of the maximum time period which can be extended under 37 C.F.R. § 1.136(a).

The Office cannot approve the request at this time since the reasons provided do not meet any of the conditions under the mandatory or permissive categories enumerated in 37 CFR 10.40. Section 10.40 of Title 37 of the Code of Federal Regulation states, "[a] practitioner shall not withdraw from employment in a proceeding before the Office without permission from the Office[.]" More specifically, 37 CFR 10.40 states, "[i]f paragraph (b) of this section is not applicable, a practitioner may not request permission to withdraw in matter pending before the Office unless such request or such withdrawal is" for one the permissive reasons listed in 37 CFR 10.40(c). The reasons set forth in the request, attorneys' client, Institute for Scientific Research, Inc. has assigned the above referenced invention back to the inventors, do not meet any the conditions set forth in 37 CFR 10.40.

In order to request or take action in a patent matter, the assignee must establish its ownership of the patent to the satisfaction of the Director. In this regard, a Statement under 37 CFR 3.73(b) must have either: (i) documentary evidence of a chain of title from the original owner to the assignee (*e.g.*, copy of an executed assignment), and a statement affirming that the documentary

evidence of the chain of title from the original owner to the assignee was or concurrently is being submitted for recordation pursuant to § 3.11; or (ii) a statement specifying where documentary evidence of a chain of title from the original owner to the assignee is recorded in the assignment records of the Office (*e.g.*, reel and frame number).

All future communications from the Office will continue to be directed to the above-listed address until otherwise notified by applicant.

There is an outstanding Office action mailed February 6, 2007 that requires a reply from the applicant.

Telephone inquiries concerning this decision should be directed to undersigned at 571-272-1642.

April M. Wise
Petitions Examiner
Office of Petitions

cc: JAMIE BREWER-MILLER
RT 1 BOX 285T
CLARKSBURG, WEST VIRGINIA 16301-9741

UNITED STATES PATENT AND TRADEMARK OFFICE

Commissioner for Patents
United States Patent and Trademark Office
P.O. Box 1450
Alexandria, VA 22313-1450
www.uspto.gov

EUGENE KEDONNE, ESQ.
REED SMITH, LLP
ATTN: PATENT RECORDS DEPARTMENT
599 LEXINGTON AVENUE
29TH FLOOR
NEW YORK, NY 10022-7650

COPY MAILED

JUL 07 2008

In re Application of	:	
Jamie L. Brewer, et al.	:	
Application No. 10/612.121	:	DECISION ON PETITION
Filed: July 2, 2003	:	TO WITHDRAW
Attorney Docket No. 260385.20005	:	FROM RECORD

This is a decision on the Request to Withdraw as attorney or agent of record under 37 C.F.R. § 1.36(b), filed March 24, 2008.

The request is **NOT APPROVED**.

A grantable request to withdraw as attorney/agent of record must be signed by every attorney/agent seeking to withdraw or contain a clear indication that one attorney is signing on behalf of another/others. A request to withdraw will not be approved unless at least 30 (thirty) days would remain between the date of approval and the later of the expiration date of a time to file a response or the expiration date of the maximum time period which can be extended under 37 C.F.R. § 1.136(a).

The request cannot be approved because the petitioner was not appointed by customer number. Petitioners can only withdraw by customer number if they were appointed by customer number.

All future communications from the Office will continue to be directed to the above-listed address until otherwise notified by applicant.

Telephone inquiries concerning this decision should be directed to undersigned at 571-272-1642.

April M. Wise
Petitions Examiner
Office of Petitions

cc: JAMIE BREWER-MILLER
RT. 1 BOX 285T
CLARKSBURG, WV 26301-9741

UNITED STATES PATENT AND TRADEMARK OFFICE

Commissioner for Patents
United States Patent and Trademark Office
P.O. Box 1450
Alexandria, VA 22313-1450
www.uspto.gov

EUGENE LEDONNE, ESQ.
REED SMITH, LLP
599 LEXINGTON AVENUE
29TH FLOOR
NEW YORK, NY 10022

COPY MAILED

DEC 0 2 2008

OFFICE OF PETITIONS

In re Application of	:	
Jamie L. Brewer, et al.	:	
Application No. 10/612,121	:	DECISION ON PETITION
Filed: July 2, 2003	:	TO WITHDRAW
Attorney Docket No. 260385.20005	:	FROM RECORD
	:	

This is a decision on the Request to Withdraw as attorney or agent of record under 37 C.F.R. § 1.36(b), filed August 18, 2008 and resubmitted November 25, 2008.

The request is **APPROVED**.

A grantable request to withdraw as attorney/agent of record must be signed by every attorney/agent seeking to withdraw or contain a clear indication that one attorney is signing on behalf of another/others. A request to withdraw will not be approved unless at least 30 (thirty) days would remain between the date of approval and the later of the expiration date of a time to file a response or the expiration date of the maximum time period which can be extended under 37 C.F.R. § 1.136(a).

The request was signed by Eugene LeDonne on behalf of all attorneys of record who are associated with this application.

All attorneys/agents associated with this application have been withdrawn.

Applicant is reminded that there is no attorney of record at this time.

All future correspondence will be directed to the first named inventor Jamie Brewer-Miller at the address indicated below.

There is an outstanding Office action mailed October 16, 2008 that requires a reply from the applicant.

Telephone inquiries concerning this decision should be directed to undersigned at 571-272-1642.

/AMW/
April M. Wise
Petitions Examiner
Office of Petitions

cc: JAMIE BREWER-MILLER
RT 1BOX 285T
CLARKSBURG, WV 26301-9741

UNITED STATES PATENT AND TRADEMARK OFFICE

UNITED STATES DEPARTMENT OF COMMERCE
United States Patent and Trademark Office
Address: COMMISSIONER FOR PATENTS
P.O. Box 1450
Alexandria, Virginia 22313-1450
www.uspto.gov

APPLICATION NUMBER	FILING OR 371(C) DATE	FIRST NAMED APPLICANT	ATTY. DOCKET NO./TITLE
10/612,121	07/02/2003	Jamie L. Brewer	260385.20005

CONFIRMATION NO. 6561

POWER OF ATTORNEY NOTICE

Eugene LeDonne, Esq
Reed Smith, LLP
599 Lexington Avenue, 29th Floor
New York, NY 10022

OC000000033322749

Date Mailed: 11/26/2008

NOTICE REGARDING CHANGE OF POWER OF ATTORNEY

This is in response to the Power of Attorney filed 11/25/2008.

- The withdrawal as attorney in this application has been accepted. Future correspondence will be mailed to the new address of record. 37 CFR 1.33.

/amwise/

Office of Data Management, Application Assistance Unit (571) 272-4000, or (571) 272-4200, or 1-888-786-0101

UNITED STATES PATENT AND TRADEMARK OFFICE

Commissioner for Patents
United States Patent and Trademark Office
P.O. Box 1450
Alexandria, VA 22313-1450
www.uspto.gov

DEC 23 2005

ICE MILLER
ONE AMERICAN SQUARE
BOX 82001
INDIANAPOLIS IN 46282-0200

In re Application of	:	
Leslie A. Geddes et al	:	
Serial No.: 10/612,126	:	DECISION ON PETITION
Filed: July 2, 2003	:	
For: Device and Method for Electrocardiography:		
On Freely Moving Animals	:	

This is in response to applicants' petition filed October 8, 2003 to make the above-identified application special under the provisions of 37 CFR 1.102(c), based on the age of the applicant.

Applicant has satisfied the provisions set forth in M.P.E.P. 708.02, IV. Therefore the petition is **GRANTED**.

The application will be forwarded to the examiner for action on the merits commensurate with this decision.

Should there be any questions with regard to this letter please contact Frederick Schmidt by letter addressed to the Director, Technology Center 3700, P.O. Box 1450 Alexandria, VA 22313-1450, or by telephone at (571) 272-2975 or by facsimile transmission at (571) 273-8300.

Frederick R. Schmidt

Frederick R. Schmidt, Director
Technology Center 3700

UNITED STATES PATENT AND TRADEMARK OFFICE

Commissioner for Patents
United States Patent and Trademark Office
P.O. Box 1450
Alexandria, VA 22313-1450
www.uspto.gov

TROXELL LAW OFFICE PLLC
SUITE 1404
5205 LEESBURG PIKE
FALLS CHURCH, VA 22041

COPY MAILED

JUL 1 0 2007

OFFICE OF PETITIONS

In re Application of	:	
Hsu, Yao-Hsi	:	
Application No. 10/612,136	:	ON PETITION
Filed: July 3, 2003	:	
Attorney Docket No. BHT-3107-118	:	

This is a decision on the petition under 37 C.F.R. § 1.137(b), filed May 29, 2007, to revive the above-identified application.

The petition is **GRANTED.**

The petition satisfies the conditions for revival pursuant to the provisions of 37 CFR 1.137(b) in that (1) the reply in the form of an Amendment; (2) the petition fee; and (3) the required statement of unintentional delay have been received. Accordingly, the response has been accepted as having been unintentionally delayed.

This matter is being referred to Technology Center 3600 for further examination on the merits.

Telephone inquiries regarding this decision should be directed to the undersigned at (571) 272-3206.

Liana Walsh
Petitions Examiner
Office of Petitions

SPE RESPONSE FOR CERTIFICATE OF CORRECTION

Paper No.: _____

DATE : March 21, 2007

TO SPE OF : ART UNIT 2877

SUBJECT : Request for Certificate of Correction for Appl. No. 10/6121480 patent No.: 7133127

Please respond to this request for a certificate of correction within 7 days.

Please review the requested changes/corrections as shown in the **COCIN** document(s) in the IFW application image. No new matter should be introduced, nor should the scope or meaning of the claims be changed.

Please complete the response (see below) and forward the completed response to scanning using document code **COCX**.

Magdalene Talley

Certificates of Correction Branch

703-308-9390 ext. 116

Thank You For Your Assistance

The request for issuing the above-identified correction(s) is hereby:

Note your decision on the appropriate box.

- ☑ **Approved** — **All** changes apply.
- ☐ **Approved in Part** — Specify below which changes **do not** apply.
- ☐ **Denied** — State the reasons for denial below.

Comments: _____

SPE

2886

Art Unit

UNITED STATES PATENT AND TRADEMARK OFFICE

Commissioner for Patents
United States Patent and Trademark Office
P.O. Box 1450
Alexandria, VA 22313-1450
www.uspto.gov

SCHERING-PLOUGH CORPORATION
PATENT DEPARTMENT (K-6-1, 1990)
2000 GALLOPING HILL ROAD
KENILWORTH, NJ 07033-0530

COPY MAILED

JAN 12 2006

OFFICE OF PETITIONS

In re Application of	:	
Neng-Yang Shih, Steven Wang,	:	
Gregory A. Reichard, Dong Xiao and	:	
Cheng Wang	:	
Application No. 10/612,176	:	DECISION GRANTING PETITION
Filed: July 2, 2003	:	UNDER 37 CFR 1.47(a)
For: NK1 ANTAGONISTS	:	

This is in response to the "Petition Under 37 CFR 1.47(a)," filed November 28, 2005 by facsimile.

The petition is **granted**.

Petitioner has shown that non-signing inventor Steven Wang has refused to join in the filing of the above-identified application.

Please note, the United States Patent and Trademark Office (Office) should have mailed a "Notice to File Missing Parts" after the submission of the unexecuted declaration on July 2, 2003. The Office sincerely apologizes for this error.

The above-identified application and papers have been reviewed and found in compliance with 37 CFR 1.47(a). This application is hereby accorded Rule 1.47(a) status. As provided in Rule 1.47(c), this Office will forward notice of this application's filing to the non-signing inventor at the address given in the petition. Notice of the filing of this application will also be published in the Official Gazette.

The file is being forwarded to the Office of Publications.

Telephone inquiries regarding this decision should be directed to the undersigned at (571) 272-3228.

Edward J. Tannouse
Petitions Attorney
Office of Petitions
Office of the Deputy Commissioner
for Patent Examination Policy

UNITED STATES PATENT AND TRADEMARK OFFICE

Commissioner for Patents
United States Patent and Trademark Office
P.O. Box 1450
Alexandria, VA 22313-1450
www.uspto.go

STEVEN WANG
30 NEWPORT PARKWAY
SUITE #2915
JERSEY CITY, NJ 07310

COPY MAILED
JAN 12 2006
OFFICE OF PETITIONS

In re Application of
Neng-Yang Shih, Steven Wang, Gregory A. Reichard,
Dong Xiao and Cheng Wang
Application No. 10/612,176
Filed: July 2, 2003
For: NK1 ANTAGONISTS

Dear STEVEN WANG:

You are named as a joint inventor in the above identified United States patent application, filed under the provisions of 35 U.S.C. 116 (United States Code), and 37 CFR 1.47(a), Rules of Practice in Patent Cases. Should a patent be granted on the application you will be designated therein as a joint inventor.

As a named inventor you are entitled to inspect any paper in the file wrapper of the application, order copies of all or any part thereof (at a prepaid cost per 37 CFR 1.19) or make your position of record in the application. Alternatively, you may arrange to do any of the preceding through a registered patent attorney or agent presenting written authorization from you. If you care to join the application, counsel of record (see below) would presumably assist you. Joining in the application would entail the filing of an appropriate oath or declaration by you pursuant to 37 CFR 1.63.

Telephone inquiries regarding this communication should be directed to the undersigned at (571) 272-3228. Requests for information regarding your application should be directed to the File Information Unit at (703) 308-2733. Information regarding how to pay for and order a copy of the application, or a specific paper in the application, should be directed to Certification Division at (703) 308-9726 or 1 (800) 972-6382 (outside the Washington D.C. area).

Edward J. Tannouse
Petitions Attorney
Office of Petitions
Office of the Deputy Commissioner
for Patent Examination Policy

SCHERING-PLOUGH CORPORATION
PATENT DEPARTMENT (K-6-1, 1990)
2000 GALLOPING HILL ROAD
KENILWORTH, NJ 07033-0530

SPE RESPONSE FOR CERTIFICATE OF CORRECTION

Paper No.: 10/3/05

DATE : 09/16/2005

TO SPE OF : ART UNIT **2824**

SUBJECT : Request for Certificate of Correction on Patent No.: 10/612191 6906939

A response is requested with respect to the accompanying request for a certificate of correction.

Please complete this form and return with file, within **7** days to:
Palm location **7580, Certificates of Correction Branch – South Tower – 9A22**
If response is for an IFW, **return to employee (named below) via PUBSCofC Team in MADRAS.**
With respect to the change(s) requested, correcting Office and/or Applicant's errors, should the patent read as shown in the certificate of correction (COCIN)? No new matter should be introduced, nor should the scope or meaning of the claims be changed.

Thank You For Your Assistance

Angela Green
Certificates of Correction Branch
Tel. No. 703-305-9380 ext. 123

The request for issuing the above-identified correction(s) is hereby:
Note your decision on the appropriate box.

- ☑ **Approved** — **All** changes apply.
- ☐ **Approved in Part** — Specify below which changes **do not** apply.
- ☐ **Denied** — State the reasons for denial below.

Comments:

The Certificate of Correction filed on 9/9/05 is approved by the Examiner

10/5/05

RICHARD ELMS
SUPERVISORY PATENT EXAMINER
TECHNOLOGY CENTER 2800

SPE

2824
Art Unit

PTO/SB/44 (04-05)
Approved for use through 04/30/2007. OMB 0651-0033
U.S. Patent and Trademark Office; U.S. DEPARTMENT OF COMMERCE
Under the Paperwork Reduction Act of 1995, no persons are required to respond to a collection of information unless it displays a valid OMB control number.
(Also Form PTO-1050)

OK To Enter
(10/4/05)

UNITED STATES PATENT AND TRADEMARK OFFICE
CERTIFICATE OF CORRECTION

Page 1 of 1

PATENT NO. : 6,906,939

APPLICATION NO.: 10/612,191

ISSUE DATE : June 14, 2005

INVENTOR(S) : Darrell Rinerson, et al.

It is certified that an error appears or errors appear in the above-identified patent and that said Letters Patent is hereby corrected as shown below:

Kindly correct mistakes by Applicant in the above captioned issued patent as set forth in A - H below:

A. In Col. 3, Line 36, in the "Brief Description of the Drawings", in regards to FIG. 4A, Please replace the words "four layer of memory" with the correct words "four layers of memory".

B. In Col. 16 and Col. 17, in regards to Claim 5, Please replace ALL instances of "x-direction conductive array layers" with "x-direction conductive layers" and replace ALL instances of "y-direction conductive array layers" with "y-direction conductive layers".

C. In Col. 17, in regards to Claim 6, Please replace "x-direction conductive array layers" with "x-direction conductive layers".

D. In Col. 17, in regards to Claim 7, Please replace ALL instances of "x-direction conductive array layers" with "x-direction conductive layers".

E. In Col. 17, in regards to Claims 8 and 9, Please replace ALL instances of "x-direction conductive array layers" with "x-direction conductive layers" and replace ALL instances of "y-direction conductive array layers" with "y-direction conductive layers". Please also replace ALL instances of "y-direction conductive array line" with "y-direction conductive layer".

F. In Col. 17, in regards to Claim 12, Please replace "four memory cell array" with "four memory cell arrays".

G. In Col. 18, in regards to Claim 21, Please replace "the re-writable is accessed" with "the re-writable memory is accessed".

H. In Col. 18, in regards to Claim 24, Please replace "x-direction conductive array line" with "x-direction conductive layer" and replace "y-direction conductive array line" with "y-direction conductive layer".

MAILING ADDRESS OF SENDER (Please do not use customer number below):

UNITY SEMICONDUCTOR CORPORATION
250 N. WOLFE ROAD
SUNNYVALE, CA 94085-4510

This collection of information is required by 37 CFR 1.322, 1.323, and 1.324. The information is required to obtain or retain a benefit by the public which is to file (and by the USPTO to process) an application. Confidentiality is governed by 35 U.S.C. 122 and 37 CFR 1.14. This collection is estimated to take 1.0 hour to complete, including gathering, preparing, and submitting the completed application form to the USPTO. Time will vary depending upon the individual case. Any comments on the amount of time you require to complete this form and/or suggestions for reducing this burden, should be sent to the Chief Information Officer, U.S. Patent and Trademark Office, U.S. Department of Commerce, P.O. Box 1450, Alexandria, VA 22313-1450. DO NOT SEND FEES OR COMPLETED FORMS TO THIS ADDRESS. SEND TO: Attention Certificate of Corrections Branch, Commissioner for Patents, P.O. Box 1450, Alexandria, VA 22313-1450.

If you need assistance in completing the form, call 1-800-PTO-9199 and select option 2.

UNITED STATES PATENT AND TRADEMARK OFFICE

Commissioner for Patents
United States Patent and Trademark Office
P.O. Box 1450
Alexandria, VA 22313-1450
www.uspto.gov

THE PROCTER & GAMBLE COMPANY
INTELLECTUAL PROPERTY DIVISION
WINTON HILL BUSINESS CENTER - BOX 161
6110 CENTER HILL AVENUE
CINCINNATI, OH 45224

COPY MAILED

MAR 1 9 2007

OFFICE OF PETITIONS

In re Application of	:	DECISION ON
Chie Ohba	:	PETITION
Application No.: 10/612197	:	
Filed: 07/02/2003	:	
Attorney Docket Number: AA537C	:	

This is a decision in response to the Petition for Withdrawal of the Holding of Abandonment, filed November 8, 2006. The petition is properly treated under 37 CFR 1.181. The delay in treating this petition is regretted.

This Petition to withdraw the holding of abandonment is hereby **granted**.

Background

The above-identified application became abandoned for failure to timely and properly reply to the final office action mailed April 10, 2006. The final office action indicated that no claims were allowed. Extensions of time under 37 CFR 1.136(a) were available.

Applicant filed an Amendment in response to the Office action on June 12, 2006; however, the Amendment failed to place the application in condition for allowance. Applicant was so notified in an Advisory Action mailed July 5, 2006.

No complete and proper reply having been received, the application became abandoned on July 11, 2006. A Notice of Abandonment was mailed October 10, 2006.

The present petition

Applicant files the present petition and asserts that a timely reply to the Office action, to wit – a Notice of Appeal and Extension of time request and fee, were filed on September 11, 2006. In support of this assertion, Applicant files a copy of the Reply and a copy of his Auto-Reply Facsimile Transmission Report indicating receipt by this office of 3 pages of transmission on September 11, 2006. Applicant also files a copy of the Sending Unit's Transmission Report confirming the transmission of 3 pages to this Office on September 11, 2006.

In view of the above, the holding of abandonment for failure to timely and properly reply to the final Office action is hereby withdrawn.

The application is being referred to Technology Center Art Unit 3761 to await the filing of Appeal brief[1].

Telephone inquiries concerning this matter should be directed to the undersigned at (571) 272-3232.

Derek L. Woods
Attorney
Office of Petitions

[1] The time period for filing an Appeal Brief is two months from the date of receipt of the Notice of Appeal. Extensions of time are available.

UNITED STATES PATENT AND TRADEMARK OFFICE

Commissioner for Patents
United States Patent and Trademark Office
P.O. Box 1450
Alexandria, VA 22313-1450
www.uspto.gov

Kirkpatrick & Lockhart, LLP
535 Smithfield Street
Pittsburgh, PA 15222

COPY MAILED
JUL 13 2004
OFFICE OF PETITIONS

In re Application of :
John K. Apostolides : NOTICE
Application No. 10/612,205 :
Filed: July 2, 2003 :
Attorney Docket No. 00478CIPCIPCIP :

This is a notice regarding your request for acceptance of a fee deficiency submission under 37 CFR 1.28(c), filed October 27, 2003, and resubmitted on May 18, 2004.

37 CFR 1.28(c) states: "The deficiency is based on the amount of the fee, for other than a small entity, in effect at the time the deficiency is paid in full." Accordingly, the fee deficiency submission under 37 CFR 1.28 is hereby **accepted**.

The change of status to a large entity has been entered and made of record.

This application will undergo further processing in the Office of Patent Examination.

Telephone inquiries concerning this matter may be directed to the undersigned at (703) 306-5589.

Christina Tartera Donnell

Christina Tartera Donnell
Senior Petitions Attorney
Office of Petitions

UNITED STATES PATENT AND TRADEMARK OFFICE

Commissioner for Patents
United States Patent and Trademark Office
P.O. Box 1450
Alexandria, VA 22313-1450
www.uspto.gov

CALFEE HALTER & GRISWOLD LLP
800 SUPERIOR AVENUE
SUITE 1400
CLEVELAND OH 44114

COPY MAILED

MAR 0 3 2008

OFFICE OF PETITIONS

In re Application of	:	
Cubukcu, et al.	:	
Application No. 10/612,230	:	ON PETITION
Filed: July 2, 2003	:	
Attorney Docket No. 21980-04012		

This is a decision on the "PETITION UNDER C.F.R. §1.181 TO WAIVE REQUIREMENT FOR NEW DECLARATION", filed January 2, 2008, which is properly treated as a petition under 37 C.F.R. §1.183.

The petition under 37 C.F.R. §1.183 is **DISMISSED**.

The Office mailed a final Office action on October 2, 2007. The final Office action required a new oath or declaration. The Office action stated that the declaration was defective because it did not state that the person making the oath or declaration believes the named inventor or inventors to be the original inventor or inventors of the subject matter which is claimed and for which a patent is sought.

Applicants have filed the instant petition, seeking waiver of the requirement for a new declaration. Applicants request the Commissioner to determine that the declaration satisfies all requirements of 37 C.F.R. §1.63(a)(4) and 35 U.S.C. 115.

37 C.F.R. 1.183 states:

> In an extraordinary situation, when justice requires, any requirement of the regulations in this part which is not a requirement of the statutes may be suspended or waived by the Commissioner or the Commissioner's designee, *sua sponte*, or on petition of the interested party, subject to such other requirements as may be imposed. Any petition under this section must be accompanied by the petition fee set forth in § 1.17(h) (emphasis added).

Furthermore, 35 U.S.C. 115 states that "the applicant shall make oath that he believes himself to be the original and first inventor of the process, machine, manufacture, or composition of matter, or improvement thereof, for which he solicits a patent". 35 U.S.C. 115 is a statutory requirement and its requirements can not be waived.

The $400 petition filing fee has been charged to Deposit Account No. 03-0172.

Applicants are reminded that the time period for filing a proper response to the October 2, 2007 final Office action continues to run.

Telephone inquiries regarding this decision should be directed to the undersigned at (571)272-3207.

Cliff Congo
Petitions Attorney
Office of Petitions

UNITED STATES PATENT AND TRADEMARK OFFICE

Commissioner for Patents
United States Patent and Trademark Office
P.O. Box 1450
Alexandria, VA 22313-1450
www.uspto.gov

TEXAS INSTRUMENTS INCORPORATED
P.O. BOX 655474, M/S 3999
DALLAS, TX 75265

COPY MAILED

JAN 1 4 2005

OFFICE OF PETITIONS

In re Application of	:	
Aton, Thomas J.	:	
Application No. 10/612,233	:	ON PETITION
Filed: July 2, 2003	:	
Attorney Docket No. TI-28621A	:	

This is a decision on the petition under 37 CFR §§ 1.78(a)(3) and 1.78(a)(6), filed November 15, 2004, to accept an unintentionally delayed claim under 35 U.S.C. §§ 120 and 119(e) for the benefit of the prior-filed nonprovisional and provisional applications set forth in the concurrently filed amendment.

The petition is **DISMISSED AS MOOT**.

A petition under 37 CFR §§ 1.78(a)(3) and 1.78(a)(6) is only applicable to those applications filed on or after November 29, 2000.

Along with the instant petition under 37 CFR §§ 1.78(a)(3) and 1.76(a)(6), petitioner has submitted an amendment to the first sentence of the specification following the title to include a reference to the prior-filed applications.

The instant pending nonprovisional application was filed on July 2, 2003, and was pending at the time of filing of the instant petition. While a reference to the prior-filed applications was not included in an ADS or in the first sentence of the specification following the title, reference nevertheless was made in the transmittal letter filed with the above-identified application.

The current procedure where a claim for priority under 37 CFR §§ 1.78(a)(3) and 1.78(a)(6) is not included in the first sentence of the specification or in an ADS but does appear either in the oath or declaration or a transmittal letter filed with the application and the Office notes the claim for priority, no petition will be required to accept a late claim for priority. This is because the application would have been scheduled for publication on the basis of the information concerning the claim submitted elsewhere in the application within the time period set forth in 37 CFR §§ 1.78(a)(2)(ii) and 1.78(a)(5)(ii). However, on the other hand, if the USPTO does not note the claim for priority to the prior-filed application(s) set forth in the oath or declaration or transmittal letter submitted with the application, a petition will be required to accept a late claim for priority under 37 CFR §§ 1.78(a)(3) and 1.78(a)(6).[1] In the instant case, the Office noted the claim for priority of the prior-filed applications in the transmittal letter filed with the application, as shown by their inclusion on the filing receipt.

[1] *Note* MPEP 201.11 (V), page 200-75 (Rev. 1. Feb. 2004 and 66 Federal Register 67087 at 67089 (Dec. 28, 2001), effective December 28, 2001.

In view of the above, the $1370.00 petition fee submitted is unnecessary and will be refunded to petitioner's deposit account in due course.

Any questions concerning this decision on petition may be directed to Paralegal Liana Chase at (703) 306-0482. All other inquiries concerning either the examination procedures or status of the application should be directed to the Technology Center.

This matter is being referred to the Examiner of Technology Center AU 2814 for appropriate action on the amendment filed November 15, 2004, including consideration of the claim under 35 U.S.C. § 120 and 37 CFR 1.78(a)(2) and the claim under 35 U.S.C. § 119(e) and 37 CFR 1.78(a)(5) for benefit of the prior-filed applications.

Frances Hicks

Frances Hicks
Petitions Examiner
Office of Petitions
Office of the Deputy Commissioner
for Patent Examination Policy

UNITED STATES PATENT AND TRADEMARK OFFICE

UNITED STATES DEPARTMENT OF COMMERCE
United States Patent and Trademark Office
Address: COMMISSIONER FOR PATENTS
P.O. Box 1450
Alexandria, Virginia 22313-1450
www.uspto.gov

TOWNSEND AND TOWNSEND AND CREW, LLP (018563)
TWO EMBARCADERO CENTER, EIGHTH FLOOR
SAN FRANCISCO, CA 94111-3834

Mail Date: 05/10/2010

Applicant	: Eric Kuo	: DECISION ON REQUEST FOR
Patent Number	: 7648360	: RECALCULATION of PATENT
Issue Date	: 01/19/2010	: TERM ADJUSTMENT IN VIEW
Application No	: 10/612,239	: OF WYETH AND NOTICE OF INTENT TO
Filed	: 07/01/2003	: ISSUE CERTIFICATE OF CORRECTION
		:

The Request for Recalculation is **GRANTED** to the extent indicated.

The patent term adjustment has been determined to be **678** days. The USPTO will *sua sponte* issue a certificate of correction reflecting the amount of PTA days determined by the recalculation.

Prior to the issuance of the certificate of correction, the USPTO will afford patentee an opportunity to be heard and request reconsideration. Accordingly, patentee has **one month or thirty (30) days**, whichever is longer, to file a request for reconsideration of this patent term adjustment calculation. See 35 U.S.C. 154(b)(3)(B)(ii) and 37 CFR 1.322(a)(4). No extensions of time will be granted under 37 CFR 1.136.

Patentee should use document code PET.OP if electronically filing a request for reconsideration of this patent term adjustment calculation. The patentee must also include the information required by 37 CFR 1.705(b)(2) and the fee required by 37 CFR 1.18(e). If patentee does not file a timely request for reconsideration of this patent term adjustment calculation including the information required by 37 CFR 1.705(b)(2) and the fee required by 37 CFR 1.18(e), the USPTO will issue a certificate of correction reflecting the PTA determination noted above.

Patentee should be aware that in order to preserve the right to review in the United States District Court for the District of Columbia of the USPTO patent term adjustment determination, patentee must ensure that he or she also take the steps required under 35 U.S.C. 154(b)(4)(A) in a timely manner. Nothing in the request for recalculation should be construed as providing an alternative time frame for commencing a civil action under 35 U.S.C. 154(b)(4)(A).

Any questions concerning this decision should be directed to the Office of Patent Legal Administration at 571-272-7702.

UNITED STATES PATENT AND TRADEMARK OFFICE

Commissioner for Patents
United States Patent and Trademark Office
P.O. Box 1450
Alexandria, VA 22313-1450
www.uspto.gov

ROBERT A. KENT
HALLIBURTON ENERGY SERVICES
2600 SOUTH 2ND STREET
DUNCAN OK 73536

COPY MAILED

JAN 16 2007

OFFICE OF PETITIONS

In re Application of :
Eldon D. Dalrymple et al. :
Application No. 10/612,271 : ON PETITION
Filed: July 2, 2003 :
Attorney Docket No. **2002-IP-007945** :

This is a decision on the petition filed August 9, 2006 under 37 CFR 1.137(b),[1] to revive the above-identified application.

The petition under 37 CFR 1.137 (b) is **GRANTED**.

A Notice of Allowability, mailed March 23, 2006, required the submission of corrected drawings on or before June 23, 2006. This application became abandoned June 26, 2006. Accordingly, a Notice of Abandonment was mailed August 1, 2006.

All other requirements under 37 CFR 1.137(b) having been met, this matter is being referred to the Publishing Division.

Telephone inquiries concerning this matter may be directed to the undersigned Petitions Attorney at (571) 272-3212.

Patricia Faison-Ball

Patricia Faison-Ball
Senior Petitions Attorney
Office of Petitions

---

[1] Effective December 1, 1997, the provisions of 37 CFR 1.137(b) now provide that where the delay in reply was unintentional, a petition may be filed to revive an abandoned application or a lapsed patent pursuant to 37 CFR 1.137(b). A grantable petition filed under the provisions of 37 CFR 1.137(b) must be accompanied by:

(1) the required reply, unless previously filed. In a nonprovisional application abandoned for failure to prosecute, the required reply may be met by the filing of a continuing application. In a nonprovisional application filed on or after June 8, 1995, and abandoned for failure to prosecute, the required reply may also be met by the filing of a request for continued examination in compliance with § 1.114. In an application or patent, abandoned or lapsed for failure to pay the issue fee or any portion thereof, the required reply must be the payment of the issue fee or any outstanding balance thereof.

(2) the petition fee as set forth in 37 CFR 1.17(m);

(3) a statement that the entire delay in filing the required reply from the due date for the reply until the filing of a grantable petition pursuant to 37 CFR 1.137(b) was unintentional. The Commissioner may required additional information where there is a question whether the delay was unintentional; and

(4) any terminal disclaimer (and fee as set forth in 37 CFR 1.20(d)) required pursuant to 37 CFR 1.137(c)).

UNITED STATES PATENT AND TRADEMARK OFFICE

Commissioner for Patents
United States Patent and Trademark Office
P.O. Box 1450
Alexandria, VA 22313-1450
www.uspto.gov

MAILED

FEB 09 2005

Director's Office
Group 3700

Therese Hendricks
Finnegan, Henderson, Farabow
Garrett & Dunner, L.L.P.
1300 I Street, N.W.
Washington, DC 20005-3315

In re application of Val Kagan	:	**DECISION ON PETITION TO MAKE SPECIAL UNDER 37 CFR. 1.102(c)**
Serial Number: 10/612272 Filed: July 2, 2003	:	

For: **APPARATUS AND METHOD FOR INDUCTIVE HEATING**

This is a decision on the petition filed on February 06, 2004, under 37 CFR. 1.102(c) to make special the above identified application because of the age/health of the applicant. Since the requirements of the M.P.E.P Section 708.02 IV have been met, the petition will be GRANTED.

The examiner is directed (1) to make an interference search for possible interfering applications, (2) to promptly examine this application out of turn, and (3) if any interfering application is discovered, to examine such application simultaneously and state in the first official letter of such application that it is being taken out of turn because of a possible interference.

Petitioner is advised that this application will continue to be special, throughout its entire prosecution and pendency, including interference or appeal, if any, only is Petitioner makes a prompt bona-fide effort, in response to each Office action, to place the application in condition for allowance, even if it is necessary to conduct an interview with the Examiner to accomplish this purpose.

Summary: Decision on Petition **GRANTED**.

Richard A. Bertsch

Richard A. Bertsch
Director
Technology Center 3700
(571) 272-3750

rt: 2/8/05

UNITED STATES PATENT AND TRADEMARK OFFICE

Commissioner for Patents
United States Patent and Trademark Office
P.O. Box 1450
Alexandria, VA 22313-1450
www.uspto.gov

td

Mailed: 7/15/05

In re application of	:	
Fabrice Diehl et al.	:	DECISION ON
Serial No. 10/612,288	:	PETITION
Filed: July 3, 2003	:	

For: HYDROTREATING CATALYST THAT CONTAINS A NITROGEN-CONTAINING ORGANIC COMPOUND AND ITS USE

This is a decision on the PETITION UNDER 37 CFR 1.181 TO WITHDRAW THE FINALITY OF THE OFFICE ACTION mailed March 18, 2005.

On October 5, 2004, a first office action was mailed to applicants, containing various grounds of rejection. It is noted that claim 5 was not rejected over any prior art. Applicants responded to this office action with a response filed on January 5, 2005. Claim 5 was not substantially amended, other than to change the dependency to claim 1. A final rejection was then mailed March 18, 2005.

On March 30, 2005, the instant petition under 37 CFR 1.181 was timely filed to formally request the withdrawal of finality of the March 18, 2005 office action.

Petitioner's position for the withdrawal of the finality is that the new grounds of rejection applied in the final office action were not necessitated by Applicant's amendments to the claims.

DECISION

Section 706.07(a) of the MPEP states:

706.07(a) Final Rejection, When Proper on Second Action
Due to the change in practice as affecting final rejections, older decisions on questions of prematureness of final rejection or admission of subsequent amendments do not necessarily reflect present practice.
Under present practice, second or any subsequent actions on the merits shall be final, except where the examiner introduces a new ground of rejection that is neither necessitated by applicant's amendment of the claims nor based on information submitted in an information disclosure statement filed during the period set forth in 37 CFR 1.97(c) with the fee set forth in 37 CFR 1.17(p)..

Petitioner argues that because claim 5 was not rejected over any prior art in the non-final office action of October 5, 2004, and then rejected for the first time in the final office action, the new grounds of rejection were not necessitated by Applicant's amendments to the claims. This argument is persuasive. Therefore, the new ground of rejection over claim 5 was not necessitated by Applicant's amendment.

Because the rejection of claim 5 over newly cited prior art was not necessitated by Applicant's amendments to the claims, the finality of the office action was premature. Accordingly, the petition for withdrawal of finality is **GRANTED.**

It is also noted that Applicants filed a response to the March 18, 2005 office action on June 7, 2005. This amendment will be treated as an amendment after non-final office action and will be entered. The application is being forwarded to the examiner to consider the amendment and prepare an appropriate office action.

Jacqueline M. Stone, Director
Technology Center 1700
Chemical and Materials Engineering

MILLEN, WHITE, ZELANO & BRANIGAN, P.C.
2200 CLARENDON BLVD.
SUITE 1400
ARLINGTON VA 22201

UNITED STATES PATENT AND TRADEMARK OFFICE

Commissioner for Patents
United States Patent and Trademark Office
P.O. Box 1450
Alexandria, VA 22313-1450
www.uspto.gov

td

Mailed: 1-3-06

In re application of	:	
Diehl et al.	:	DECISION ON
Serial No. 10/612,288	:	PETITION
Filed: July 3, 2003	:	

For: HYDROTREATING CATALYST THAT CONTAINS A NITROGEN-CONTAINING ORGANIC COMPOUND AND ITS USE

This is a decision on the PETITION UNDER 37 CFR 1.181 TO WITHDRAW THE FINALITY OF THE OFFICE ACTION mailed September 27, 2005.

A petition was previously granted in this application to withdraw the finality of the office action mailed March 18, 2005. An amendment was filed on July 18, 2005 in which all claims except claims 18 and 19 were made dependent upon claim 21. Claim 21 was indicated as allowable by the examiner in an advisory action mailed July 8, 2005. Claims 18 and 19 had previously been indicated as allowable. On September 27, 2005, a final office action was mailed rejecting all of the claims over newly cited prior art.

On October 11, 2005 the instant petition under 37 CFR 1.181 was filed to formally request the withdrawal of finality of the September 27, 2005 office action.

Applicants position for the withdrawal of the finality is that the new grounds of rejection in the final office action were not necessitated by Applicant's amendments to the claims.

DECISION

Section 706.07 of the MPEP states:

706.07(a) Final Rejection, When Proper on Second Action

Under present practice, second or any subsequent actions on the merits shall be final, except where the examiner introduces a new ground of rejection that is neither necessitated by applicant's amendment of the claims nor based on information submitted in an information disclosure statement filed during the period set forth in 37 CFR 1.97(c) with the fee set forth in 37 CFR 1.17(p).

Petitioner argues that because all of the claims were previously indicated as allowable, the amendments made did not necessitate the new grounds of rejection presented by the examiner in the final office action. This argument is persuasive. The new grounds of rejection over all of the claims were clearly not necessitated by Applicant's amendment because Applicants merely

followed the suggestions set forth by the examiner to present the allowable claims in the proper form. Because the scope of the claimed subject matter was not changed, there is no basis for the examiner's assertion that the amendments necessitated the new grounds of rejection. It is noted that on page 5 of the final office action the examiner states that the new grounds of rejection came about due to a new search and further consideration.

The finality was improper and the petition for withdrawal of finality is **GRANTED.**

It is also pointed out that while the finality of the office action has been withdrawn, the rejection still stands. Applicant's time for response to the September 27, 2005 office action continues to run. Extensions of time may be obtained to file any amendments. Such amendments will be treated as an amendment under 37 CFR 1.111 or 1.112 and will be entered.

JMStone

Jacqueline M. Stone, Director
Technology Center 1700
Chemical and Materials Engineering

MILLEN, WHITE, ZELANO & BRANIGAN, P.C.
2200 CLARENDON BLVD.
SUITE 1400
ARLINGTON VA 22201

UNITED STATES PATENT AND TRADEMARK OFFICE

Commissioner for Patents
United States Patent and Trademark Office
P.O. Box 1450
Alexandria, VA 22313-1450
www.uspto.gov

COPY MAILED

JUN 15 2007

OFFICE OF PETITIONS

MICHAEL BEST & FRIEDRICH, LLP
ONE SOUTH PINCKNEY STREET
P O BOX 1806
MADISON, WI 53701

In re Application of
Byron E. Anderson
Application No. 10/612,298
Filed: July 2, 2003
Attorney Docket No. 45240-105719

DECISION ON PETITION TO WITHDRAW FROM RECORD

This is a decision on the Request to Withdraw as attorney or agent of record under 37 C.F.R. § 1.36(b), filed May 7, 2007.

The request is **DISMISSED** as moot.

A review of the file record indicates that the power of attorney given to Michael Best & Friedrich, LLP has been revoked by the assignee of the patent application on May 23, 2007. Accordingly, the request to withdraw under 37 C.F.R. § 1.36(b) is moot.

The correspondence address of record has been changed and the new correspondence address is the address indicated below.

There is an outstanding Office action mailed June 5, 2007 that requires a reply by the applicant.

Telephone inquires concerning this decision should be directed to Diane Goodwyn at 571-272-6735.

April Wise
Petitions Examiner
Office of Petitions

cc: BYRON ANDERSON
6032 LINCOLN AVENUE
MORTON GROVE, IL 60053

UNITED STATES PATENT AND TRADEMARK OFFICE

UNITED STATES DEPARTMENT OF COMMERCE
United States Patent and Trademark Office
Address: COMMISSIONER FOR PATENTS
P.O. Box 1450
Alexandria, Virginia 22313-1450
www.uspto.gov

APPLICATION NUMBER	FILING OR 371 (c) DATE	FIRST NAMED APPLICANT	ATTY. DOCKET NO./TITLE
10/612,298	07/02/2003	Byron E. Anderson	45240-105719

CONFIRMATION NO. 5133

OC000000024315691

23644
BARNES & THORNBURG LLP
P.O. BOX 2786
CHICAGO, IL 60690-2786

Date Mailed: 06/12/2007

NOTICE OF ACCEPTANCE OF POWER OF ATTORNEY

This is in response to the Power of Attorney filed 05/23/2007.

The Power of Attorney in this application is accepted. Correspondence in this application will be mailed to the above address as provided by 37 CFR 1.33.

Office of Initial Patent Examination (571) 272-4000, or 1-800-PTO-9199
ATTORNEY/APPLICANT COPY

UNITED STATES PATENT AND TRADEMARK OFFICE

UNITED STATES DEPARTMENT OF COMMERCE
United States Patent and Trademark Office
Address: COMMISSIONER FOR PATENTS
P.O. Box 1450
Alexandria, Virginia 22313-1450
www.uspto.gov

APPLICATION NUMBER	FILING OR 371 (c) DATE	FIRST NAMED APPLICANT	ATTY. DOCKET NO./TITLE
10/612,298	07/02/2003	Byron E. Anderson	45240-105719

CONFIRMATION NO. 5133

OC000000024315557

23510
MICHAEL BEST & FRIEDRICH, LLP
ONE SOUTH PINCKNEY STREET
P O BOX 1806
MADISON, WI 53701

Date Mailed: 06/12/2007

NOTICE REGARDING CHANGE OF POWER OF ATTORNEY

This is in response to the Power of Attorney filed 05/07/2007.

- The Power of Attorney to you in this application has been revoked by the assignee who has intervened as provided by 37 CFR 3.71. Future correspondence will be mailed to the new address of record(37 CFR 1.33).

Office of Initial Patent Examination (571) 272-4000, or 1-800-PTO-9199
NEW ATTORNEY/AGENT COPY

UNITED STATES PATENT AND TRADEMARK OFFICE

UNITED STATES DEPARTMENT OF COMMERCE
United States Patent and Trademark Office
Address: COMMISSIONER FOR PATENTS
P.O. Box 1450
Alexandria, Virginia 22313-1450
www.uspto.gov

APPLICATION NUMBER	FILING OR 371 (c) DATE	FIRST NAMED APPLICANT	ATTY. DOCKET NO./TITLE
10/612,298	07/02/2003	Byron E. Anderson	45240-105719

CONFIRMATION NO. 5133

OC000000024315557

23510
MICHAEL BEST & FRIEDRICH, LLP
ONE SOUTH PINCKNEY STREET
P O BOX 1806
MADISON, WI 53701

Date Mailed: 06/12/2007

NOTICE REGARDING CHANGE OF POWER OF ATTORNEY

This is in response to the Power of Attorney filed 05/07/2007.

- The Power of Attorney to you in this application has been revoked by the assignee who has intervened as provided by 37 CFR 3.71. Future correspondence will be mailed to the new address of record(37 CFR 1.33).

Diane Goodwyn

Office of Initial Patent Examination (571) 272-4000, or 1-800-PTO-9199
FORMER ATTORNEY/AGENT COPY

UNITED STATES PATENT AND TRADEMARK OFFICE

Commissioner for Patents
United States Patent and Trademark Office
P.O. Box 1450
Alexandria, VA 22313-1450
www.uspto.gov

DOUG MURDOCK
GENETRONICS INC
11494 SORRENTO VALLEY ROAD
SAN DIEGO CA 92121-1334

COPY MAILED

MAY 23 2007

OFFICE OF PETITIONS

In re Application of	:	
Mathiesen, et al.	:	
Application No. 10/612,304	:	ON PETITION
Filed: July 3, 2003	:	
Attorney Docket No. 065334-0110	:	

This is a decision on the petition to revive under 37 CFR 1.137(b), filed April 10, 2007.

The petition under 37 CFR 1.137(b) is **GRANTED**.

The above-identified application became abandoned for failure to timely file a reply in response to the non-final Office action mailed September 5, 2006. This Office action set an extendable period for reply of three (3) months. No reply having been received, the application became abandoned on December 6, 2006. A Notice of Abandonment was mailed on April 5, 2007.

With the instant petition, applicant paid the petition fee, made a proper statement of unintentional delay, and submitted the required reply in the form of an Amendment.

Pursuant to 37 CFR 1.136, an extension of time must be filed prior to the expiration of the maximum period obtainable for reply to avoid abandonment. Accordingly, since the $510 extension of time fee submitted with the petition on April 10, 2007 was subsequent to the maximum period obtainable for reply (March 5, 2007), this fee will be refunded to petitioner under separate cover.

The matter is being forwarded to Group Art Unit 1615 for consideration of the Amendment filed April 10, 2007.

Telephone inquiries concerning this decision should be directed to the undersigned at (571)272-3207.

Cliff Arne Congo
Petitions Attorney
Office of Petitions

UNITED STATES PATENT AND TRADEMARK OFFICE

Commissioner for Patents
United States Patent and Trademark Office
P.O. Box 1450
Alexandria, VA 22313-1450
www.uspto.gov

Paper No.

THOMSON LICENSING LLC
Two Independence Way
Suite 200
PRINCETON NJ 08540

COPY MAILED

DEC 0 5 2007

OFFICE OF PETITIONS

In re Application of Louis Robert Litwin et al. Application No. 10/612,310 Filed: July 2, 2003 Attorney Docket Number: PU030156 Title: METHOD AND APPARATUS FOR FREQUENCY-ROBUST DETECTION OF A WIDEBAND CODE DIVISION MULTIPLE ACCESS SECONDARY SYNCHRONIZATION CHANNEL	DECISION ON PETITION UNDER 37 C.F.R. § 1.137(B)

This is a decision on the petition filed August 6, 2007, pursuant to 37 C.F.R. § 1.137(b)[1], to revive the above-identified application.

1 A grantable petition pursuant to 37 C.F.R § 1.137(b) must be accompanied by:
(1) The reply required to the outstanding Office action or notice, unless previously filed;
(2) The petition fee as set forth in § 1.17(m);
(3) A statement that the entire delay in filing the required reply from the due date for the reply until the filing of a grantable petition pursuant to this paragraph was unintentional. The Commissioner may require additional information where there is a question whether the delay was unintentional, and;
(4) Any terminal disclaimer (and fee as set forth in § 1.20(d)) required pursuant to paragraph (d) of this section.

The above-identified application became abandoned for failure to reply within the meaning of 37 C.F.R § 1.113 in a timely manner to the final Office action mailed October 5, 2006, which set a shortened statutory period for reply of three months. No extensions of time under the provisions of 37 C.F.R § 1.136(a) were obtained, and no responses were received. Accordingly, the above-identified application became abandoned on January 6, 2007. A notice of abandonment was mailed on May 17, 2007.

37 C.F.R. §1.137(b)(3) requires a statement that the entire delay in filing the required reply from the due date for the reply until the filing of a grantable petition pursuant to 37 C.F.R. §1.137(b) was unintentional. Since the statement contained in the instant petition varies from the language required by 37 C.F.R. §1.137(b)(3), the statement contained in the instant petition is being construed as the statement required by 37 C.F.R. §1.137(b)(3) and Petitioner must notify the Office if this is not a correct interpretation of the statement contained in the present petition.

With the present petition, Petitioner filed a Request for Continued Examination (RCE) under 37 C.F.R. § 1.114, including a request for consideration of a concurrently submitted amendment and payment of the RCE fee. The RCE has been accepted as the required reply under 37 C.F.R. § 1.137(b)(1). Having made a statement which is being construed as the proper statement of unintentional delay and having submitted the petition fee, Petitioner has met all other requirements for a grantable petition under 37 C.F.R. §1.137(b). A terminal disclaimer is not required.

As such, the petition under 37 C.F.R. § 1.137(b) is **GRANTED**.

The Technology Center will be notified of this decision. The Technology Center's support staff will notify the Examiner of this decision, so that the submission under 37 C.F.R. §1.114 - the amendment filed concurrently with this petition - can be processed.

It is noted that the address listed on the petition differs from the address of record. The application file does not indicate a change of correspondence address has been filed in this case, although the address given on the petition differs from the address of record. If petitioner desires to receive future correspondence regarding this application, the change of correspondence address must be submitted. A courtesy copy of this decision will be mailed to petitioner. However, all future correspondence will be directed to the address of record until

such time as appropriate instructions are received to the contrary. Petitioner will not receive future correspondence unless a Change of Correspondence Address Form (PTO/SB/122) is submitted for the above-identified application. A blank Change of Correspondence Address Form (PTO/SB/122) may be found at http://www.uspto.gov/web/forms/sb0122.pdf.

Telephone inquiries regarding *this decision* should be directed to the undersigned at (571) 272-3225[2]. All other inquiries concerning the status of the application should be directed to the Technology Center.

Paul Shanoski
Senior Attorney
Office of Petitions
United States Patent and Trademark Office

cc: THOMSON LICENSING LLC
Patent Operations
PO Box 5312
PRINCETON NJ 08543-5312

2 Petitioner will note that all practice before the Office should be in writing, and the action of the Office will be based exclusively on the written record in the Office. See 37 C.F.R. § 1.2. As such, Petitioner is reminded that no telephone discussion may be controlling or considered authority for any further action(s) of Petitioner.

UNITED STATES PATENT AND TRADEMARK OFFICE

Commissioner for Patents
United States Patent and Trademark Office
P.O. Box 1450
Alexandria, VA 22313-1450
www.uspto.gov

TOWNSEND AND TOWNSEND AND CREW, LLP
TWO EMBARCADERO CENTER
EIGHTH FLOOR
SAN FRANCISCO CA 94111-3834

COPY MAILED

AUG 30 2007

OFFICE OF PETITIONS

In re Application of	:	
DEEM, Mark E. et al.	:	
Application No. 10/612,325	:	DECISION ON PETITION
Filed: July 01, 2003	:	TO WITHDRAW
Attorney Docket No. **020979-001610US**	:	FROM RECORD

This is a decision on the Request to Withdraw as attorney or agent of record under 37 C.F.R. § 1.36(b), filed June 07, 2007.

The request is **APPROVED**.

A grantable request to withdraw as attorney/agent of record must be signed by every attorney/agent seeking to withdraw or contain a clear indication that one attorney is signing on behalf of another/others. A request to withdraw will not be approved unless at least 30 (thirty) days would remain between the date of approval and the later of the expiration date of a time to file a response or the expiration date of the maximum time period which can be extended under 37 C.F.R. § 1.136(a).

The request was signed by James Heslin on behalf of all attorneys of record who are associated.
All attorneys/agents associated have been withdrawn. Applicant is reminded that there is no attorney of record at this time.

The request to change the correspondence of record is not acceptable as the requested correspondence address is not that of: (1) the first named signing inventor; or (2) an intervening assignee of the entire interest under 37 C.F.R 3.71. All future communications from the Office will be directed to the first named signing inventor at the first copied address below until otherwise properly notified by the applicant.

Telephone inquiries concerning this decision should be directed to Tredelle Jackson at 571-272-2783.

Monica A. Graves
Petitions Examiner
Office of Petitions

cc: **MARK DEEM**
685 SIERRA AVENUE
MOUNTAIN VIEW, CA 94041

cc: **ROBERT JACKSON**
ROPES & GRAY
1211 AVENUE OF THE AMERICAS
NEW YORK, NY 10036

UNITED STATES PATENT AND TRADEMARK OFFICE

COMMISSIONER FOR PATENTS
UNITED STATES PATENT AND TRADEMARK OFFICE
P.O. BOX 1450
ALEXANDRIA, VA 22313-1450
WWW.USPTO.GOV

Paper No. None

CALFEE HALTER & GRISWOLD, LLP
800 SUPERIOR AVENUE
SUITE 1400
CLEVELAND OH 44114

COPY MAILED

MAR 1 2 2004

OFFICE OF PETITIONS

In re Application of
Esin Cubukcu, Steve Dahar, Ravi Dodeja,
Arnold Z. Gordon, Daniel Kalynchuk, Troy
Shanon Prince, Justin Soltesz, Mike Waite,
and Sandeep Chawla
Application No. 10/612,330
Filed: July 2, 2003
Attorney Docket No. 21980-04012
Title: CERAMIC COMPOSITE
ELECTROLYTIC DEVICE

DECISION ON PETITION

This is in response to the petition under 37 C.F.R. §1.47(a)[1], filed November 21, 2003.

On July 2, 2003, the application was deposited, identifying Esin Cubukcu, Steve Dahar, Ravi Dodeja, Arnold Z. Gordon, Daniel Kalynchuk, Troy Shanon Prince, Justin Soltesz, Mike Waite, and Sandeep Chawla as joint inventors. The application was deposited without a fully executed oath or declaration[2]. On September 30, 2003, the Office mailed a Notice to File Missing Parts of Nonprovisional Application (Notice), requiring an executed oath or declaration along with the surcharge associated with the late filing of an

[1]A grantable petition under 37 C.F.R. §1.47(a) requires:
(1) the petition fee of $130;
(2) a surcharge of either $65 or $130 if the petition is not filed at the time of filing the application, as set forth in 37 CFR § 1.16(e);
(3) a statement of the last known address of the non-signing inventors;
(4) either
a) proof that a copy of the entire application (specification, claims, drawings, and the oath or declaration) was sent or given to the non-signing inventor for review and proof that the non-signing inventor refuses to join in the application or
b) proof that the non-signing inventor cannot be found or reached after diligent effort;
(5) a declaration which complies with 37 CFR §1.63.

2 Joint inventor Prince did not execute the declaration.

oath or declaration. The notice set a two-month period for response, and indicated that the basic filing fee and replacement drawings were required.

The instant application is a divisional of parent application 09/020,204, which issued as patent number 6074771 on June 13, 2000. On November 5, 1998, petitioner filed a petition under 37 C.F.R. §1.47(a) to accept the declaration without the signature of joint inventor Prince. On October 8, 1999, a decision was mailed which accorded Rule 47(a) status to application number 09/020,204.

On November 21, petitioner submitted a copy of the declaration[3], the instant petition, a statement of facts, the basic filing fee, the petition fee (charged to Petitioner's Deposit Account, as authorized in the petition), a copy of the 1.47(a) petition filed with the parent application (09/020,204), copies of letters and an assignment agreement, and a copy of the decision mailed October 8, 1999.

On December 22, 2003, the Office withdrew the notice mailed September 30, 2003, and mailed a corrected notice, which set forth that all signatures were missing from the declaration, and that substitute drawings were required. The corrected notice restarted the two-month period for response.

Petitioner should note that although she filed a petition under 37 CFR §1.47(a) on November 21, 2003, she was not relieved of the requirement to submit a timely reply to the Notice to File Missing Parts of Application[4]. Both the notice and the corrected notice set forth that substitute drawings were required. To date, these have not been supplied.

37 C.F.R. 1.63(d)(3) sets forth:

(3) Where the executed oath or declaration of which a copy is submitted for a continuation or divisional application was originally filed in a prior application accorded status under 37 C.F. R. §1.47, the copy of the executed oath or declaration for such prior application must be accompanied by:
(i) A copy of the decision granting a petition to accord 37 C.F. R. §1.47 status to the prior application, unless all inventors or legal representatives have filed an oath or declaration to join in an application accorded status under 37 C.F. R. §1.47 of which the continuation or divisional application claims a benefit under 35 U.S.C. §§120, 121, or 365(c); and
(ii) If one or more inventor(s) or legal representative(s) who refused to join in the prior application or could not be found or reached has subsequently joined in the prior application or another application of which the continuation or divisional application claims a benefit under 35 U.S.C. §§120, 121, or 365(c), a copy of the subsequently executed oath(s) or declaration(s) filed by the inventor or legal representative to join in the application.

MPEP 201.06(c) sets forth:

37 CFR 1.63(d)(3) provides for the situation in which the executed oath or declaration, of which a copy is submitted for a continuation or divisional application, was originally filed in a prior application accorded status under 37 CFR 1.47. 37 CFR 1.63(d)(3)(i) requires a copy of any decision granting a petition to accord 37 CFR 1.47 status to such application, unless all nonsigning inventor(s) or legal representative

---

3 Again, the declaration submitted with the instant petition was executed by each of the joint inventors save joint inventor Prince.
4 See 37 CFR §1.135(b).

(pursuant to 37 CFR 1.42 or 1.43) have filed an oath or declaration to join in an application of which the continuation or divisional application claims a benefit under 35 U.S.C. 120, 121 or 365(c). Where one or more, but not all, nonsigning inventor or legal representative (pursuant to 37 CFR 1.42 or 1.43) subsequently joins in any application of which the continuation or divisional application claims a benefit under 35 U.S.C. 120, 121 or 365(c), 37 CFR 1.63(d)(3)(ii) also requires a copy of any oath or declaration filed by the inventor or legal representative who subsequently joined in such application.

New continuation or divisional applications filed under 37 CFR 1.53(b) which contain a copy of an oath or declaration that is not signed by one of the inventors and a copy of the decision according 37 CFR 1.47 status in the prior application, should be forwarded by the Office of Initial Patent Examination (OIPE) to the Office of Petitions before being forwarded to the Technology Center (TC). The Office of Petitions will mail applicant a letter stating that "Rule 47" status has been accorded to the continuation or divisional application, but will not repeat the notice to the nonsigning inventor nor the announcement in the *Official Gazette*. See 37 CFR 1.47(c).

Petitioner has supplied copies of both the petition of November 5, 1998 and the decision of October 8, 1999.

As such, The above-identified application and papers have been reviewed and found in compliance with 37 CFR 1.47(a). This application is hereby accorded Rule 1.47(a) status.

The petition is **GRANTED**.

As provided in MPEP 204.06(c), this Office will not forward notice of this application's filing to the non-signing inventor at the addresses given in the petition, and notice of the filing of this application will not be repeated in the Official Gazette.

After this decision is mailed, the application will be forwarded to the Office of Initial Patent Examination for further processing.

Telephone inquiries regarding this decision should be directed to the undersigned at (703) 305-0011.

Paul Shanoski
Attorney
Office of Petitions
United States Patent and Trademark Office

UNITED STATES PATENT AND TRADEMARK OFFICE

Commissioner for Patents
United States Patent and Trademark Office
P.O. Box 1450
Alexandria, VA 22313-1450
www.uspto.gov

CALFEE HALTER & GRISWOLD LLP
800 SUPERIOR AVENUE
SUITE 1400
CLEVELAND OH 44114

COPY MAILED

APR 2 8 2008

OFFICE OF PETITIONS

In re Application of	:	
Cubukcu, et al.	:	
Application No. 10/612,330	:	ON PETITION
Filed: July 2, 2003	:	
Attorney Docket No. 21980-04012		

This is a decision on the "PETITION UNDER C.F.R. §1.181 TO WAIVE REQUIREMENT FOR NEW DECLARATION", filed January 2, 2008, which is properly treated as a petition under 37 C.F.R. §1.183.

The petition under 37 C.F.R. §1.183 is **DISMISSED**.

The Office mailed a final Office action on October 2, 2007. The final Office action required a new oath or declaration. The Office action stated that the declaration was defective because it did not state that the person making the oath or declaration believes the named inventor or inventors to be the original inventor or inventors of the subject matter which is claimed and for which a patent is sought.

Applicants have filed the instant petition, seeking waiver of the requirement for a new declaration. Applicants request the Commissioner to determine that the declaration satisfies all requirements of 37 C.F.R. §1.63(a)(4) and 35 U.S.C. 115.

37 C.F.R. 1.183 states:

> In an extraordinary situation, when justice requires, any requirement of the regulations in this part which is not a requirement of the statutes may be suspended or waived by the Commissioner or the Commissioner's designee, *sua sponte*, or on petition of the interested party, subject to such other requirements as may be imposed. Any petition under this section must be accompanied by the petition fee set forth in § 1.17(h) (emphasis added).

Furthermore, 35 U.S.C. 115 states that "the applicant shall make oath that he believes himself to be the original and first inventor of the process, machine, manufacture, or composition of matter, or improvement thereof, for which he solicits a patent". 35 U.S.C. 115 is a statutory requirement and its requirements can not be waived.

Telephone inquiries regarding this decision should be directed to the undersigned at (571)272-3207.

Cliff Congo
Petitions Attorney
Office of Petitions

UNITED STATES PATENT AND TRADEMARK OFFICE

COMMISSIONER FOR PATENTS
UNITED STATES PATENT AND TRADEMARK OFFICE
P.O. BOX 1450
ALEXANDRIA, VA 22313-1450
www.uspto.gov

LERNER GREENBERG STEMER LLP
P O BOX 2480
HOLLYWOOD, FL 33022-2480

COPY MAILED

AUG 28 2006

OFFICE OF PETITIONS

In re Application of :
Dera et al. :
Application No. 10/612,352 :
Filed: July 2, 2003 : ON PETITION
Attorney Docket Number: :
A03754 :

This is a decision on the Petition Under 37 CFR 1.8(b), filed October 17, 2005. The petition is properly treated under 37 CFR 1.181(a) to withdraw the holding of abandonment (based upon evidence of compliance with 37 CFR 1.8(b)). The delay in treating this petition is regretted.

The petition is **granted.**

The above-identified application became abandoned for failure to reply in a timely manner to the non-final Office action, mailed January 12, 2005. The Office action set a three (3) month period for reply, and provided for extensions of time under 37 CFR 1.136(a). No reply having been received, the application became abandoned April 13, 2005. A Notice of Abandonment was mailed on October 6, 2005.

Applicant's Assertion

Applicant responds with the instant petition wherein Applicant asserts that a timely reply was filed on April 12, 2005. In support of this assertion, Applicant files a copy of the Response, that includes a certificate of transmission under 37 CFR 1.8 dated April 12, 2005, and what is putatively identified as a Declaration in compliance with 37 CFR 1.8(b) attesting to the mailing of the Response and executed by the same party who executed the Certificate of Mailing on the Response.

Section 1746 of Title 28 of the United States Code provides:

> Whenever, under any law of the United States or under any rule, regulation, order, or requirement made pursuant to law, any matter is required to be supported, evidenced, established, or proved by sworn declaration, verification, certificate, statement, oath or affidavit, in writing of the person making the same (other than a deposition, or an oath of office, or an oath required to be taken before a specified official other than notary public), such matter may, with like force and effect, be supported, evidenced, established, or proved by the unsworn declaration, certificate, verification, or statement, in writing of such person which is subscribed by him, as true <u>under penalty of perjury</u>, and dated, in substantially the following form:
>
> [1] If executed without the United States: "I declare (or certify, verify, or state) under penalty of perjury under the laws of the United States of America that the foregoing is true and correct. Executed on (date). (Signature)."
>
> [2] <u>If executed within the United States</u> its territories, possessions, or commonwealths: "I declare (or certify, verify, or state) <u>under penalty of perjury</u> that the foregoing is true and correct. Executed on (date). (Signature)."

(Emphasis supplied.) MPEP 602

Here, the Putative declaration of Yonghong Chen was not executed under penalty of perjury, and is therefore not an acceptable declaration. However, a review of Office records reveals that the Office received Applicant's Response filed on April 12, 2005.

In view of the foregoing, the Notice of Abandonment is hereby vacated and the holding of abandonment is hereby withdrawn.

No fee has been charged for the petition and none is due.

The application file is being referred to Technology Center Art Unit 3724 for processing of the Response in due course.

Telephone inquiries concerning this decision should be directed to the undersigned at 571-272-3232.

Derek L. Woods
Attorney
Office of Petitions

UNITED STATES PATENT AND TRADEMARK OFFICE

Commissioner for Patents
United States Patent and Trademark Office
P.O. Box 1450
Alexandria, VA 22313-1450
www.uspto.gov

Paper No. 122304

FERNANDEZ & ASSOCIATES, LLP.
PO Box D
Menlo Park, CA 94026-6402

In re Application of:	:	
Jan Paul Anthonie Van Der Wagt	:	DECISION ON REQUEST TO WITHDRAW FROM RECORD
Serial No.: 10/612,371	:	
Filed: July 02, 2003	:	
Attorney Docket No.: **INPHI-P065**	:	

This is a decision on the request to withdraw as attorney of record under 37 C.F.R. § 1.36, filed July 01, 2004.

The request is **DISMISSED** as moot.

A review of the application file record reveals a proper revocation and power of attorney to the attorneys of Koppel, Jacobs, Patrick, Heybl was filed on October 29, 2004. As such, the power of attorney for the attorneys and agents requesting withdrawal has already been revoked. Accordingly, the present request is moot, and must be dismissed.

All future communications form the Office will continue to be directed to the below-listed address until otherwise notified by applicant.

Inquiries related to this decision should be directed to Hien H. Phan at (571) 272-1606.

Hien H. Phan, Special Programs Examiner
Technology Center 2800
Semiconductors, Electrical and Optical
Systems and Components

HHP/nmc

cc: Koppel, Jacobs, Patrick & Heybl
555 St. Charles Drive, Suite 107
Thousand Oaks, CA 91360

UNITED STATES PATENT AND TRADEMARK OFFICE

COMMISSIONER FOR PATENTS
UNITED STATES PATENT AND TRADEMARK OFFICE
P.O. BOX 1450
ALEXANDRIA, VA 22313-1450
WWW.USPTO.GOV

Paper No. None

SUGHRUE MION, PLLC
2100 PENNSYLVANIA AVENUE, N.W.
SUITE 800
WASHINGTON DC 20037

COPY MAILED
APR 06 2004
OFFICE OF PETITIONS

In re Application of
Hironori Endo
Application No. 10/612,394
Filed: February 4, 2004
Attorney Docket No. Q76423
Title: LIQUID EJECTION CONTROL METHOD AND LIQUID EJECTION APPARATUS

DECISION ON PETITION

This is a decision on the "Response to notice of incomplete nonprovisional application filed under 37 C.F.R. §1.53(b)," which is properly treated as a petition under §1.53(e)(2), filed on February 4, 2004, requesting that the application be accorded a filing date of July 3, 2003.

The application was deposited on July 3, 2003. However, on December 4, 2003, the Office of Initial Patent Examination (OIPE) mailed a "Notice of Incomplete Nonprovisional Application – Filing Date *not* Granted" (notice), stating that the application was deposited without at least one claim, and that a filing date would be accorded upon the deposit of a claim. The notice also set forth that the basic filing fee, an oath or declaration, an English translation, substitute drawings, and the surcharge associated with the filing of a specification in a language other than English were required.

In response, on February 4, 2004, applicants filed the present petition. The petition is further accompanied by a copy of an English translation, a statement that the translation is accurate, the basic filing fee, a declaration, substitute drawings, and the surcharge associated with the late filing of an oath or declaration. Applicants allege that nineteen (19) claims were present of filing, and request that the application, including nineteen (19) claims be accorded a filing date of July 3, 2003.

The surcharge associated with the filing of a specification in a language other than English has been charged to Petitioner's Deposit Account, as authorized in the petition.

Petitioner has further included a postcard receipt which evinces that "# Pgs. Spec/Abst: 45/1 # Claims 19 *(Japanese Language)" was received in the Patent Office of July 3, 2003.

37 C.F.R. §1.52(a)(b)(1)(ii) sets forth that patent applications must be in the English language or be accompanied by a translation of the application and a translation of any corrections or amendments into the English language together with a statement that the translation is accurate.

Since the application was filed in a language other than the English language, and was accompanied by neither a translation nor the requisite statement of accuracy, the application was not entitled to a filing date until these required items were supplied.

As such, the petition under 37 C.F.R. §1.53(e)(2) is **DISMISSED**.

The application file is being returned to the Office of Initial Patent Examination (OIPE) for further processing with a filing date of February 4, 2004, the date on which both the translation and the statement that the translation is accurate were supplied. OIPE will use the original application papers filed on July 3, 2003, as well as the translation submitted on February 4, 2004.

Any inquiries related to this decision should be directed to Attorney Paul Shanoski at (703) 305-0011.

Patricia Larson Ball for

Jay Lucas
Interim Supervisory Petitions Examiner
Office of Petitions
United States Patent and Trademark Office

UNITED STATES PATENT AND TRADEMARK OFFICE

COMMISSIONER FOR PATENTS
UNITED STATES PATENT AND TRADEMARK OFFICE
P.O. BOX 1450
ALEXANDRIA, VA 22313-1450
WWW.USPTO.GOV

Paper No. None

SUGHRUE MION, PLLC
2100 PENNSYLVANIA AVENUE, N.W.
SUITE 800
WASHINGTON DC 20037

COPY MAILED

MAY 07 2004

OFFICE OF PETITIONS

In re Application of
Hironori Endo
Application No. 10/612,394
Filed: July 3, 2003
Attorney Docket No. Q76423
Title: LIQUID EJECTION CONTROL METHOD AND LIQUID EJECTION APPARATUS

DECISION VACATING PREVIOUS DECISION

This is a decision on the "Response to notice of incomplete nonprovisional application filed under 37 C.F.R. §1.53(b)," which is properly treated as a petition under §1.53(e)(2), filed on February 4, 2004, requesting that the application be accorded a filing date of July 3, 2003.

On April 6, 2004, a decision was mailed which dismissed the above-identified petition.

The decision mailed April 6, 2004 is hereby **VACATED**.

The petition is **GRANTED**.

After the mailing of this decision, the application will be forwarded to the Office of Initial Patent Examination (OIPE) for further processing with a filing date of July 3, 2003, using the original application papers filed on July 3, 2003, as well as the translation submitted on February 4, 2004. OIPE will then mail a filing receipt, indicating a filing date of July 3, 2003.

Any inquiries related to this decision should be directed to the undersigned at (703) 305-0011.

Paul Shanoski
Senior Attorney
Office of Petitions
United States Patent and Trademark Office

UNITED STATES PATENT AND TRADEMARK OFFICE

Commissioner for Patents
United States Patent and Trademark Office
P.O. Box 1450
Alexandria, VA 22313-1450
www.uspto.gov

COPY MAILED

SEP 21 2009

OFFICE OF PETITIONS

FOLEY AND LARDNER LLP
SUITE 500
3000 K STREET NW
WASHINGTON DC 20007

In re Patent No. 7,479,982
Issued: January 20, 2009
Application No. 10/612,404
Filed: July 3, 2003
Dkt. No.: 035924-0109

: DECISION UNDER 37 CFR 1.705(d) and
: NOTICE OF INTENT TO ISSUE
: CERTIFICATE OF CORRECTION
:
:

This is a decision on the "REQUEST FOR RECONSIDERATION OF PATENT TERM ADJUSTMENT UNDER 37 C.F.R § 1.705," filed March 10, 2009. This matter is being properly treated as an application for patent term adjustment pursuant to 37 CFR 1.705(d).

The request for reconsideration of patent term adjustment (PTA) is GRANTED TO THE EXTENT INDICATED HEREIN.

The above-identified application matured into U.S. Pat. No. 7,479,982 on January 20, 2009. The patent issued with a PTA of 922 days. The request for reconsideration of patent term adjustment was timely filed within two months of the issue date of the patent. See, 37 CFR 1.705(d). Patentees request that the patent term adjustment be increased from 922 days to 1,496 days.

Patentees request reconsideration of the patent term adjustment based on the decision in Wyeth v. Dudas, 580 F. Supp. 2d 138, 88 U.S.P.Q. 2d 1538 (D.D.C. 2008). Patentees contend that pursuant to Wyeth, a PTO delay under 35 U.S.C. 154(b)(1)(A) overlaps with a delay under 35 U.S.C. 154(b)(1)(B) only if the delays occur on the same day.

Patentees' calculation of adjustment asserts the following: a three year delay by the Office, pursuant to 37 CFR 1.702(b), of 932 days and the period of adjustment due to examination delay, pursuant to 37 CFR 1.702(a), of 984 days. The 932-day period is calculated based on the application having been filed under 35 U.S.C. 111(a) on July 3, 2003, and the patent having been issued on January 20, 2009. Patentees assert an applicant delay of 62 days and 42 days, or 104 days in total. Patentees assert an Office overall delay of 1,600 days, thus, presumably patentees assert an overlap of 316 days. Patentees assert that in addition to the 932-day period, they are entitled to a period of adjustment due to examination delay pursuant to 37 CFR 1.702(a) of 984 days. Thus, patentees request that the patent term adjustment be increased to 1,496 days (984 days + 932 days – 316 overlapping delays – 104 days of applicant delay).

Under 37 CFR 1.703(f), patentees are entitled to a period of patent term adjustment equal to the period of delays based on the grounds set forth in 37 CFR 1.702 reduced by the period of time equal to the period of time during which patentees failed to engage in reasonable efforts to conclude prosecution pursuant to 37 CFR 1.704. In other words, patentees are entitled to the period of Office delay reduced by the period of applicant delay.

The Office agrees that certain action was not taken within a specified time frame, and, thus, the entry of a period of adjustment of 984 days is correct. At the time of issuance of the patent, the application was pending three years and 932 days. At issue is whether patentees should accrue an additional 932 days of patent term adjustment for the Office taking in excess of three years to issue the patent as well as 984 days for Office failure to take a certain action within a specified time frame (or examination delay).

The Office contends that the period of 932 days delay in issuance of the patent overlaps with the period of 984 days of examination delay. Patentees' calculation of the period of overlap is inconsistent with the Office's interpretation of this provision. 35 U.S.C. 154(b)(2)(A) limits the adjustment of patent term, as follows:

> To the extent that the periods of delay attributable to grounds specified in paragraph (1) overlap, the period of any adjustment granted under this subsection shall not exceed the actual number of days the issuance of the patent was delayed.

Likewise, 35 CFR 1.703(f) provides that:

> To the extent that periods of delay attributable to the grounds specified in § 1.702 overlap, the period of adjustment granted under this section shall not exceed the actual number of days the issuance of the patent was delayed.

As explained in Explanation of 37 CFR 1.703(f) and of the United States Patent and Trademark Office Interpretation of 35 U.S.C. 154(b)(2)(A), 69 Fed. Reg. 34283 (June 21, 2004), the Office interprets 35 U.S.C. 154(b)(2)(A) as permitting either patent term adjustment under 35 U.S.C. 154(b)(1)(A)(i)-(iv), or patent term adjustment under 35 U.S.C. 154(b)(1)(B), but not as permitting patent term adjustment under both 35 U.S.C. 154(b)(1)(A)(i)-(iv) and 154(b)(1)(B). Accordingly, the Office implements the overlap provision as follows:

> If an application is entitled to an adjustment under 35 U.S.C. 154(b)(1)(B), the entire period during which the application was pending (except for periods excluded under 35 U.S.C. 154(b)(1)(B)(i)-(iii)), and not just the period beginning three years after the actual filing date of the application, is the period of delay under 35 U.S.C. 154(b)(1)(B) in determining whether periods of delay overlap under 35 U.S.C. 154(b)(2)(A). Thus, any days of delay for Office issuance of the patent more than 3 years after the filing date of the application, which overlap with the days of patent term adjustment accorded prior to the issuance of the patent will not result in any additional patent term adjustment. See 35 U.S.C. 154(b)(1)(B), 35 U.S.C. 154(b)(2)(A), and 37 CFR § 1.703(f). See Changes to

> Implement Patent Term Adjustment Under Twenty Year Term; Final Rule, 65 Fed. Reg. 56366 (Sept. 18, 2000). See, also, Revision of Patent Term Extension and Patent Term Adjustment Provisions; Final Rule, 69 Fed. Reg. 21704 (April 22, 2004), 1282 Off. Gaz. Pat. Office 100 (May 18, 2004). See, also, Explanation of 37 CFR 1.703(f) and of the United States Patent and Trademark Office Interpretation of 35 U.S.C. 154(b)(2)(A), 69 Fed. Reg. 34283 (June 21, 2004).

The current wording of § 1.703(f) was revised in response to the misinterpretation of this provision by a number of Patentees. The rule was slightly revised to more closely track the corresponding language of 35 U.S.C. 154(b)(2)(A). The relevant portion differs only to the extent that the statute refers back to provisions of the statute whereas the rule refers back to sections of the rule. This was not a substantive change to the rule nor did it reflect a change of the Office's interpretation of 35 U.S.C. 154(b)(2)(A). As stated in the Explanation of 37 CFR 1.703(f) and of the United States Patent and Trademark Office Interpretation of 35 U.S.C. 154(b)(2)(A), the Office has consistently taken the position that if an application is entitled to an adjustment under the three-year pendency provision of 35 U.S.C. 154(b)(1)(B), the entire period during which the application was pending before the Office (except for periods excluded under 35 U.S.C. 154(b)(1)(B)(i)-(iii)), and not just the period beginning three years after the actual filing date of the application, is the relevant period under 35 U.S.C. 154(b)(1)(B) in determining whether periods of delay "overlap" under 35 U.S.C. 154(b)(2)(A).

This interpretation is consistent with the statute. Taken together the statute and rule provide that to the extent that periods of delay attributable to grounds specified in 35 U.S.C. 154(b)(1) and in corresponding § 1.702 overlap, the period of adjustment granted shall not exceed the actual number of days the issuance of the patent was delayed. The grounds specified in these sections cover the A) guarantee of prompt Patent and Trademark Office responses, B) guarantee of no more than 3-year application pendency, and C) guarantee or adjustments for delays due to interference, secrecy orders and appeals. A section by section analysis of 35 U.S.C. 154(b)(2)(A) specifically provides that:

> Section 4402 imposes limitations on restoration of term. In general, pursuant to [35 U.S.C.] 154(b)(2)(A)-(C), total adjustments granted for restorations under [35 U.S.C. 154](b)(1) are reduced as follows: (1) To the extent that there are multiple grounds for extending the term of a patent that may exist simultaneously (e.g., delay due to a secrecy order under [35 U.S.C.] 181 and administrative delay under [35 U.S.C.] 154(b)(1)(A)), the term should not be extended for each ground of delay but only for the actual number of days that the issuance of a patent was delayed; See, 145 Cong. Rec. S14,718[1].

---

[1] The AIPA is title IV of the Intellectual Property and Communications Omnibus Reform Act of 1999 (S. 1948), which was incorporated and enacted as law as part of Pub. L. 106-113. The Conference Report for H.R. 3194, 106th Cong. 1st Sess. (1999), which resulted in Pub. L. 106-113, does not contain any discussion (other than the incorporated language) of S. 1948. A section`-by-section analysis of S. 1948, however, was printed in the Congressional Record at the request of Senator Lott, See 145 Cong. Rec. S14,708-26 (1999)(daily ed. Nov. 17, 1999).

As such, the period for over three-year pendency does not overlap only to the extent that the actual dates in the period beginning three years after the date on which the application was filed overlap with the actual dates in the periods for failure of the Office to take action within specified time frames.

In this instance, the relevant period under 35 U.S.C. 154(b)(1)(B) in determining whether periods of delay "overlap" under 35 U.S.C. 154(b)(2)(A) is the entire period during which the application was pending before the Office, July 3, 2003, to the date the patent issued on January 20, 2009. Prior to the issuance of the patent, 984 days of patent term adjustment were accorded for the Office failing to respond within a specified time frame during the pendency of the application. All of the 932 days for Office delay in issuing the patent overlap with the 984 days of Office examination delay. The Office did not delay 984 days and also delay an additional 932 days. Accordingly, as the 932 days attributable to the delay in the issuance of the patent overlap with the adjustment of 984 days attributable to grounds specified in § 1.702(a)(1), entry of both periods is not warranted.

In view thereof, no adjustment to the patent term insofar as 37 CFR 1.702(b) will be made.

As to patentees contention that the period of applicant delay is 104 days, a review of the record reveals that the correct period of applicant delay is 69 days. As reflected in the revised determination of adjustment, the adjustment of 984 days was properly reduced 62 days in accordance with 37 CFR 1.704(b) in connection with the reply to non-final Office action filed June 9, 2008.

Further review of the record reveals that, as reflected by patentees' calculation of adjustment, the Office neglected to assess a post-allowance reduction. While patentees assert the correct reduction in connection with the priority documents submitted December 10, 2008 is 42 days, in accordance with 37 CFR 1.704(c)(10)(i), the adjustment of 984 days is properly reduced an additional seven days. The reduction commenced December 10, 2008, the date that the post-allowance submission was filed, and ended December 16, 2008, the date that a reply in response thereto was mailed.

Accordingly, at the time of issuance, the patent was entitled to an overall adjustment of 915 days.

Any request for reconsideration of this decision must be submitted within ONE MONTH of the mail date indicated herein. The time period for seeking reconsideration is not subject to extension under 37 CFR 1.136.

This application file will be forwarded to the Certificate of Corrections branch for issuance of a certificate of correction to indicate that the term of this patent is extended or adjusted under 35 U.S.C. 154(b) by 915 days.

The Office acknowledges submission of the required application fee of $200.00. See, 37 CFR 1.18(e).

Telephone inquiries specific to this matter should be directed to the undersigned at (571) 272-3205.

Alesia M. Brown
Petitions Attorney
Office of Petitions

Enclosure: Draft Certificate of Correction

UNITED STATES PATENT AND TRADEMARK OFFICE

CERTIFICATE OF CORRECTION

PATENT	:	7,479,982 B2
DATED	:	January 20, 2009
INVENTOR(S)	:	Otani, et al.

It is certified that error appears in the above-identified patent and that said Letters Patent is hereby corrected as shown below:

On the cover page,

[*] Notice: Subject to any disclaimer, the term of this patent is extended or adjusted under 35 USC 154(b) by 922 days

Delete the phrase "by 922 days" and insert – by 915 days--

UNITED STATES PATENT AND TRADEMARK OFFICE

Commissioner for Patents
United States Patent and Trademark Office
P.O. Box 1450
Alexandria, VA 22313-1450
www.uspto.gov

SUGHRUE MION PLLC
2100 PENNSYLVANIA AVENUE, NW
SUITE 800
WASHINGTON, DC 20037

COPY MAILED

FEB 08 2005

OFFICE OF PETITIONS

ON PETITION

In re Application of :
Masato Shimada et al :
Application No. 10/612,411 :
Filed: July 3, 2003 :
Attorney Docket No. Q76433 :

This is a decision on the petition, filed February 4, 2005, under 37 CFR 1.313(c)(3) to withdraw the above-identified application from issue after payment of the issue fee.

The petition is **GRANTED**.

The above-identified application is withdrawn from issue for express abandonment. See 37 CFR 1.313(c)(3). The above-identified application is expressly abandoned in favor of a continuing application under 37 CFR 1.53(b).

Telephone inquiries should be directed to the undersigned at (571) 272-3218.

The abandoned file is being referred to Files Repository.

Frances Hicks
Frances Hicks
Petitions Examiner
Office of Petitions
Office of the Deputy Commissioner
for Patent Examination Policy

UNITED STATES PATENT AND TRADEMARK OFFICE

Commissioner for Patents
United States Patent and Trademark Office
P.O. Box 1450
Alexandria, VA 22313-1450
www.uspto.gov

AT & T LEGAL DEPARTMENT - MMM
ATTN; PATENT DOCKETING
ROOM 2A-207, ONE AT & T WAY
BEDMINSTER, NJ 07921

COPY MAILED

APR 0 8 2009

OFFICE OF PETITIONS

In re Application of	:	
Joseph M. Hanners, et al.	:	
Application No. 10/612,427	:	DECISION ON PETITION
Filed: July 1, 2003	:	
Attorney Docket No. BS030153/21523-67762	:	

This is a decision on the petition, filed, February 12, 2009, which is being treated as a request under 37 CFR 3.81(b)[1] to correct assignee's name on the Fee(s) Transmittal form PTOL-85(b) by way of a certificate of correction in the patent to be issued from the above-identified application.

The request is **GRANTED**.

Petitioner states that the correct assignee's name is AT&T Intellectual Property I, L.P. and that the incorrect assignee's name was included on the Fee(s) Transmittal form PTOL-85(b) at the time of payment of the issue fee. Accordingly, petitioner requests that a certificate of correction be issued to reflect the correct assignee on the front page of the Letters Patent in the patent to be issued from the application.

37 CFR 3.81(b), effective June 25, 2004, reads:

> *After payment of the issue fee:* Any request for issuance of an application in the name of the assignee submitted after the date of payment of the issue fee, and any request for a patent to be corrected to state the name of the assignee, must state that the assignment was submitted for recordation as set forth in § 3.11 before issuance of the patent, and must include a request for a certificate of correction under § 1.323 of this chapter (accompanied by the fee set forth in § 1.20(a) and the processing fee set forth in § 1.17(i) of this chapter.

[1] *See* MPEP 1309, subsection II; and Official Gazette of June 22, 2004.

The request was accompanied by a certificate of correction (and fees) as required by 3.81(b). Further, Office assignment records reflect that AT&T Intellectual Property I, L.P. is the assignee of record. Accordingly, as the request complies with the provisions of 37 CFR 3.81(b), it would be appropriate for a certificate of correction to be processed after issuance of this application into a patent.

The file does not indicate a change of address has been submitted, although the address given on the petition differs from the address of record. If appropriate, a change of address should be filed in accordance with MPEP 601.03. A courtesy copy of this decision is being mailed to the address given on the petition; however, the Office will mail all future correspondence solely to the address of record.

Inquiries concerning this decision should be directed to the undersigned at (571) 272-3204. Any questions concerning the issuance of a certificate of correction should be directed to the Certificates of Correction Branch at (571) 272-4200.

This matter is being referred to the Certificates of Correction Branch for processing of a certificate of correction after issuance of this application into a patent.

Sherry D. Brinkley
Petitions Examiner
Office of Petitions

cc: JENNIFER PEARSON MEDLIN
MORRIS, MANNING & MARTIN, LLP
1600 ATLANTA FINANCIAL CENTER
3343 PEACHTREE ROAD, N.E.
ATLANTA, GEORGIA 30326-1044

UNITED STATES PATENT AND TRADEMARK OFFICE

UNITED STATES DEPARTMENT OF COMMERCE
United States Patent and Trademark Office
Address: COMMISSIONER FOR PATENTS
P.O. Box 1450
Alexandria, Virginia 22313-1450
www.uspto.gov

WILLIAMS, MORGAN & AMERSON
10333 RICHMOND, SUITE 1100
HOUSTON, TX 77042

Mail Date: 04/21/2010

Applicant	: Teck H. Hu	: DECISION ON REQUEST FOR
Patent Number	: 7577120	: RECALCULATION of PATENT
Issue Date	: 08/18/2009	: TERM ADJUSTMENT IN VIEW
Appliction No	: 10/612,438	: OF WYETH AND NOTICE OF INTENT TO
Filed	: 07/02/2003	: ISSUE CERTIFICATE OF CORRECTION
		:

The Request for Recalculation is **GRANTED** to the extent indicated.

The patent term adjustment has been determined to be **1085** days. The USPTO will *sua sponte* issue a certificate of correction reflecting the amount of PTA days determined by the recalculation.

Prior to the issuance of the certificate of correction, the USPTO will afford patentee an opportunity to be heard and request reconsideration. Accordingly, patentee has **one month or thirty (30) days**, whichever is longer, to file a request for reconsideration of this patent term adjustment calculation. See 35 U.S.C. 154(b)(3)(B)(ii) and 37 CFR 1.322(a)(4). No extensions of time will be granted under 37 CFR 1.136.

Patentee should use document code PET.OP if electronically filing a request for reconsideration of this patent term adjustment calculation. The patentee must also include the information required by 37 CFR 1.705(b)(2) and the fee required by 37 CFR 1.18(e). If patentee does not file a timely request for reconsideration of this patent term adjustment calculation including the information required by 37 CFR 1.705(b)(2) and the fee required by 37 CFR 1.18(e), the USPTO will issue a certificate of correction reflecting the PTA determination noted above.

Patentee should be aware that in order to preserve the right to review in the United States District Court for the District of Columbia of the USPTO patent term adjustment determination, patentee must ensure that he or she also take the steps required under 35 U.S.C. 154(b)(4)(A) in a timely manner. Nothing in the request for recalculation should be construed as providing an alternative time frame for commencing a civil action under 35 U.S.C. 154(b)(4)(A).

Any questions concerning this decision should be directed to the Office of Patent Legal Administration at 571-272-7702.

UNITED STATES PATENT AND TRADEMARK OFFICE

Commissioner for Patents
United States Patent and Trademark Office
P.O. Box 1450
Alexandria, VA 22313-1450
www.uspto.gov

DAVID J. SERBIN
WRB-IP LLP
1217 KING STREET
ALEXANDRIA VA 22314

COPY MAILED
AUG 13 2008

In re Application of	:	
Katarina Magnusson	:	
Application No. 10/612,445	:	DECISION ON PETITION
Filed: July 2, 2003	:	
Attorney Docket No. SG03197	:	

This is a decision on the petition under the unintentional provisions of 37 CFR 1.137(b), filed January 24, 2008, to revive the above-identified application.

The petition is **GRANTED**.

The application became abandoned for failure to reply in a timely manner to the non-final Office action mailed, June 21, 2007, which set a shortened statutory period for reply of three (3) months. No extensions of time under the provisions of 37 CFR 1.136(a) were obtained. Accordingly, the application became abandoned on September 22, 2007.

An extension of time under 37 CFR 1.136 must be filed prior to the expiration of the maximum extendable period for reply. *See* In re Application of S., 8 USPQ2d 1630, 1631 (Comm'r Pats. 1988). Since the $1050.00 extension of time fee submitted with the petition on January 24, 2008 was subsequent to the maximum extendable period for reply, this fee is unnecessary and will be credit to petitioner's deposit account.

The petition satisfies the requirements of 37 CFR 1.137(b) in that petitioner has supplied (1) the reply in the form of an amendment, (2) the petition fee of $1540.00, and (3) a proper statement of unintentional delay.

Telephone inquiries concerning this decision should be directed to JoAnne Burke at (571) 272-4584.

This application is being referred to Technology Center AU 1794 for appropriate action by the Examiner in the normal course of business on the reply received.

Irvin Dingle
Petitions Examiner
Office of Petitions

UNITED STATES PATENT AND TRADEMARK OFFICE

UNITED STATES DEPARTMENT OF COMMERCE
United States Patent and Trademark Office
Address: COMMISSIONER FOR PATENTS
P.O. Box 1450
Alexandria, Virginia 22313-1450
www.uspto.gov

APPLICATION NO.	FILING DATE	FIRST NAMED INVENTOR	ATTORNEY DOCKET NO.	CONFIRMATION NO.
10/612,447	07/02/2003	William E. Allen	5218-108	5432

20792 7590 03/16/2006

MYERS BIGEL SIBLEY & SAJOVEC
PO BOX 37428
RALEIGH, NC 27627

EXAMINER
STOCKTON, LAURA LYNNE

ART UNIT	PAPER NUMBER
1626	

DATE MAILED: 03/16/2006

Please find below and/or attached an Office communication concerning this application or proceeding.

UNITED STATES
PATENT AND
TRADEMARK OFFICE

UNDER SECRETARY OF COMMERCE FOR INTELLECTUAL PROPERTY AND
DIRECTOR OF THE UNITED STATES PATENT AND TRADEMARK OFFICE
P.O. Box 1450
Alexandria, VA. 22313-1450
WWW.USPTO.GOV

KENNETH D. SIBLEY
MYERS BIGEL SIBLEY & SAJOVEC
PO BOX 37428
RALEIGH, NC 27627

Date: March 7, 2006
Application No.: 10/612,447
Filed: July 2, 2003
Subject: **Biimidazole diamide anion binding agents**

ON PETITION
37 CFR 1.48(a)

Receipt is acknowledged of the petition filed February 21, 2006 under 37 CFR 1.48(a) for correction of inventorship. The petition has been **GRANTED**.

In view of the papers filed, it has been found that Corey P. Causey was inadvertently omitted as a co-inventor of the instant claimed invention. Accordingly, this application has been changed by the **addition of COREY P. CAUSEY.** The application will be forwarded to the Office of Initial Patent Examination (OIPE) for issuance of a corrected filing receipt, and correction of the file jacket and PTO PALM data to reflect the inventorship as corrected.

Joseph K. McKane

JOSEPH K. MCKANE
United States Patent and Trademark Office
Technology Center 1600
SPE, ART UNIT 1626
Remsen 5A05
571-272-0699

UNITED STATES PATENT AND TRADEMARK OFFICE

Commissioner for Patents
United States Patent and Trademark Office
P.O. Box 1450
Alexandria, VA 22313-1450
www.uspto.gov

King & Spalding
1180 Peachtree Street, NE
Atlanta, GA 30309-3521

COPY MAILED

APR 0 8 2009

OFFICE OF PETITIONS

In re Application of
Francisco Cruz et al.
Application No. 10/612,463
Filed: July 1, 2003
Attorney Docket No. 14281.105002 DIV

DECISION ON PETITION
TO WITHDRAW
FROM RECORD

This is a decision on the Request to Withdraw as attorney or agent of record under 37 C.F.R. § 1.36(b), filed March 13, 2009.

The request is **APPROVED**.

A grantable request to withdraw as attorney/agent of record must be signed by every attorney/agent seeking to withdraw or contain a clear indication that one attorney is signing on behalf of another/others. A request to withdraw will not be approved unless at least 30 (thirty) days would remain between the date of approval and the later of the expiration date of a time to file a response or the expiration date of the maximum time period which can be extended under 37 C.F.R. § 1.136(a).

The request was signed by Rebecca Kaufman on behalf of attorney/agents associated with customer number 20786. All attorneys/agents associated with customer number 20786.

Applicant is reminded that there is no attorney of record at this time.

The correspondence address has been changed. All future correspondence will be mailed to the address of the assignee.

Telephone inquiries concerning this decision should be directed to Kimberly Inabinet at 571-272-4618.

Kimberly Inabinet
Petitions Examiner
Office of Petitions

cc: Mount Cook Biosciences, Inc.
787 7th Avenue, 48th Floor
New York, NY 10019

UNITED STATES PATENT AND TRADEMARK OFFICE

UNITED STATES DEPARTMENT OF COMMERCE
United States Patent and Trademark Office
Address: COMMISSIONER FOR PATENTS
P.O. Box 1450
Alexandria, Virginia 22313-1450
www.uspto.gov

APPLICATION NUMBER	FILING OR 371(C) DATE	FIRST NAMED APPLICANT	ATTY. DOCKET NO./TITLE
10/612,463	07/01/2003	Francisco Cruz	14281.105002 DIV

CONFIRMATION NO. 3099

POWER OF ATTORNEY NOTICE

20786
KING & SPALDING
1180 PEACHTREE STREET , NE
ATLANTA, GA 30309-3521

OC000000035381976

Date Mailed: 04/08/2009

NOTICE REGARDING CHANGE OF POWER OF ATTORNEY

This is in response to the Power of Attorney filed 03/13/2009.

- The withdrawal as attorney in this application has been accepted. Future correspondence will be mailed to the new address of record. 37 CFR 1.33.

/kainabinet/

Office of Data Management, Application Assistance Unit (571) 272-4000, or (571) 272-4200, or 1-888-786-0101

UNITED STATES PATENT AND TRADEMARK OFFICE

COMMISSIONER FOR PATENTS
UNITED STATES PATENT AND TRADEMARK OFFICE
P.O. BOX 1450
ALEXANDRIA, VA 22313-1450
www.uspto.gov

Attention: J. Wendy Davis, Ph.D.
BRACEWELL & PATTERSON, L.L.P.
P.O. Box 61389
Houston TX 77208-1389

COPY MAILED

MAR 20 2007

OFFICE OF PETITIONS

In re Application of	:	
ZANG et al.	:	
Application No.: 10/612,468	:	DECISION ON PETITION
Filing Date: July 2, 2003	:	UNDER 37 CFR 1.137(b)
Attorney Docket No.: 057186.000003	:	

This is a decision on the petition under 37 CFR 1.137(b), filed January 8, 2007, to revive the above-identified application. (Although the petition is entitled "PETITION TO REVIVE UNDER 37 CFR 1.137(a)", it is clear from the fee paid and the petition itself that the petition is intended as a petition under 37 CFR 1.137(b).)

The petition is **GRANTED.**

The above-identified application became abandoned for failure to reply in a timely manner to the non-final Office action mailed May 24, 2006, which set a shortened statutory period for reply of three (3) months. No extensions of time under the provisions of 37 CFR 1.136(a) were obtained. Accordingly, by operation of law, the above-identified application became abandoned on August 24, 2006.

The petition satisfies the conditions for revival pursuant to the provisions of 37 CFR 1.137(b) in that (1) the reply in the form of an amendment; (2) the petition fee; and (3) the required statement of unintentional delay have been received. Accordingly, the reply to the Office action mailed May 24, 2006 is accepted as having been unintentionally delayed.

This application is being referred to Technology Center AU 1644 for appropriate action, if any, on the reply in due course.

Telephone inquiries concerning this decision should be directed to the undersigned at (571) 272-3301.

Daniel Stemmer
Legal Examiner
Office of the Deputy Commissioner
for Patent Examination Policy

UNITED STATES PATENT AND TRADEMARK OFFICE

Commissioner for Patents
United States Patent and Trademark Office
P.O. Box 1450
Alexandria, VA 22313-1450
www.uspto.gov

MERCHANT & GOULD PC
P.O. BOX 2903
MINNEAPOLIS MN 55402-0903

COPY MAILED

DEC 20 2004

OFFICE OF PETITIONS

In re Application of :
Steven E. Lentsch et al :
Application No. 10/612,474 :
Filed: July 2, 2003 :
Attorney Docket No. 163.1202US01 :

ON PETITION

This is a decision on the petition, filed December 13, 2004, under 37 CFR 1.313(c)(2) to withdraw the above-identified application from issue after payment of the issue fee.

The petition is **GRANTED.**

The above-identified application is withdrawn from issue for consideration of a submission under 37 CFR 1.114 (request for continued examination). See 37 CFR 1.313(c)(2).

Petitioner is advised that the issue fee paid on October 18, 2004 in the above-identified application cannot be refunded. If, however, the above-identified application is again allowed, petitioner may request that it be applied towards the issue fee required by the new Notice of Allowance.[1]

Telephone inquiries should be directed to the undersigned at (571) 272-3208.

The examiner of Technology Center AU 1751 will consider the request for continued examination under 37 CFR 1.114.

Karen Creasy
Petitions Examiner
Office of Petitions
Office of the Deputy Commissioner
for Patent Examination Policy

---

[1] The request to apply the issue fee to the new Notice may be satisfied by completing and returning the new Issue Fee Transmittal Form PTOL-85(b), which includes the following language thereon: "Commissioner for Patents is requested to apply the Issue Fee and Publication Fee (if any) or re-apply any previously paid issue fee to the application identified above." Petitioner is advised that, whether a fee is indicated as being due or not, the Issue Fee Transmittal Form **must** be completed and timely submitted to avoid abandonment. Note the language in bold text on the first page of the Notice of Allowance and Fee(s) Due (PTOL-85).

UNITED STATES PATENT AND TRADEMARK OFFICE

UNITED STATES DEPARTMENT OF COMMERCE
United States Patent and Trademark Office
Address: COMMISSIONER FOR PATENTS
P.O. Box 1450
Alexandria, Virginia 22313-1450
www.uspto.gov

NIXON PEABODY LLP
300 S. Riverside Plaza
16th Floor
CHICAGO, IL 60606

Mail Date: 04/21/2010

Applicant	: Allon G. Englman	: DECISION ON REQUEST FOR
Patent Number	: 7662040	: RECALCULATION of PATENT
Issue Date	: 02/16/2010	: TERM ADJUSTMENT IN VIEW
Appliction No	: 10/612,478	: OF WYETH AND NOTICE OF INTENT TO
Filed	: 07/02/2003	: ISSUE CERTIFICATE OF CORRECTION
		:

The Request for Recalculation is **GRANTED** to the extent indicated.

The patent term adjustment has been determined to be **646** days. The USPTO will *sua sponte* issue a certificate of correction reflecting the amount of PTA days determined by the recalculation.

Prior to the issuance of the certificate of correction, the USPTO will afford patentee an opportunity to be heard and request reconsideration. Accordingly, patentee has **one month or thirty (30) days**, whichever is longer, to file a request for reconsideration of this patent term adjustment calculation. See 35 U.S.C. 154(b)(3)(B)(ii) and 37 CFR 1.322(a)(4). No extensions of time will be granted under 37 CFR 1.136.

Patentee should use document code PET.OP if electronically filing a request for reconsideration of this patent term adjustment calculation. The patentee must also include the information required by 37 CFR 1.705(b)(2) and the fee required by 37 CFR 1.18(e). If patentee does not file a timely request for reconsideration of this patent term adjustment calculation including the information required by 37 CFR 1.705(b)(2) and the fee required by 37 CFR 1.18(e), the USPTO will issue a certificate of correction reflecting the PTA determination noted above.

Patentee should be aware that in order to preserve the right to review in the United States District Court for the District of Columbia of the USPTO patent term adjustment determination, patentee must ensure that he or she also take the steps required under 35 U.S.C. 154(b)(4)(A) in a timely manner. Nothing in the request for recalculation should be construed as providing an alternative time frame for commencing a civil action under 35 U.S.C. 154(b)(4)(A).

Any questions concerning this decision should be directed to the Office of Patent Legal Administration at 571-272-7702.

UNITED STATES PATENT AND TRADEMARK OFFICE

UNITED STATES DEPARTMENT OF COMMERCE
United States Patent and Trademark Office
Address: COMMISSIONER FOR PATENTS
P.O. Box 1450
Alexandria, Virginia 22313-1450
www.uspto.gov

NIXON PEABODY LLP
300 S. Riverside Plaza
16th Floor
CHICAGO, IL 60606

Mail Date: 05/18/2010

Applicant : Allon G. Englman
Patent Number : 7662040
Issue Date : 02/16/2010
Application No : 10/612,478
Filed : 07/02/2003

: NOTICE CONCERNING IMPROPER
: CALCULATION OF PATENT TERM
: ADJUSTMENT BASED UPON USPTO
: IMPROPERLY MEASURING REDUCTION
: PERIOD UNDER 37 CFR 1.704(c)(10).

The United States Patent and Trademark Office (USPTO) discovered that in processing the recent recalculation decisions mailed in response to patentee's filed Request for Recalculation of Patent Term Adjustment in view of Wyeth, the USPTO improperly measured the reduction period for reductions under 37 CFR 1.704(c)(10). Pursuant to 37 CFR 1.704(c)(10), patentee's reduction begins on the date of filing the amendment under 37 CFR 1.312 ("1.312 amendment") or other related paper and ends on the date that the Office mails a response to the filing of the 1.312 amendment or other paper. It has been discovered that during the recalculation, the calculation failed to the limit the reduction to the mail date of the response to the 1.312 amendment or other paper. Accordingly, patentee's reductions were greater than warranted.

This notice **VACATES** the previous GRANTED request for recalculation and provides patentee with a revised GRANTED recalculation.

The patent term adjustment has been determined to be **681** days. The USPTO will *sua sponte* issue a certificate of correction reflecting the amount of patent term adjustment (PTA) days determined by the recalculation.

Prior to the issuance of the certificate of correction, the USPTO will afford patentee an opportunity to be heard and request reconsideration. Accordingly, patentee has **one month or thirty (30) days** from the mail date of this notice, whichever is longer, to file a request for reconsideration of this PTA calculation. See 35 U.S.C. § 154(b)(3)(B)(ii) and 37 CFR 1.322(a)(4).

Patentee should use document code PET.OP if electronically filing a request for reconsideration of this PTA calculation. The patentee must also include the information required by 37 CFR 1.705(b)(2), and the fee required by 37 CFR 1.18(e). If patentee does not file a timely request for reconsideration of this PTA calculation, including the information required by 37 CFR 1.705(b)(2) and the fee required by 37 CFR 1.18(e), the USPTO will issue a certificate of correction reflecting the PTA determination noted above.

Patentee should be aware that in order to preserve the right of review of the USPTO's PTA determination in the United States District Court for the District of Columbia, patentee must ensure that the steps required under 35 U.S.C. § 154 (b)(4) are taken in a timely manner. Nothing in the request for recalculation should be construed as providing an alternative time frame for commencing a civil action under 35 U.S.C. § 154(b)(4).

UNITED STATES PATENT AND TRADEMARK OFFICE

Commissioner for Patents
United States Patent and Trademark Office
P.O. Box 1450
Alexandria, VA 22313-1450
www.uspto.gov
DIW Oct-08

DENNIS M. FLAHERTY, ESQ.
OSTRAGER CHONG FLAHERTY & BROITMAN P.C.
570 LEXINGTON AVENUE
NEW YORK NY 10022-6894

COPY MAILED
OCT 07 2008
OFFICE OF PETITIONS

In re Application of	:	
Jimmy Lee Long	:	DECISION ON PETITION TO
Application Number: 10/612481	:	WITHDRAW HOLDING OF
Filing Date: 07/01/2003	:	ABANDONMENT
Attorney Docket Number: ITW-14146	:	

This is a decision on the petition to withdraw the holding of abandonment, filed on August 21, 2008.

The petition is **DISMISSED**.

A Notice of Abandonment was mailed on May 28, 2008, stating that the application is abandoned in view of applicant's failure to file a proper reply to the Office action mailed on June 7, 2007.

Petitioner's counsel asserts that a proper and timely reply was filed, and requests that the abandonment be withdrawn.

A review of the record reveals the following:

1. On July 1, 2003, the application was filed.

2. On June 7, 2007, a final Office action was mailed, setting a three (3) month shortened statutory period for reply.

3. On August 9, 2007 (certificate of mailing date August 6, 2007), an amendment after final rejection was filed.

4. On September 21, 2007, an Advisory Action Before the Filing of An Appeal Brief was mailed, stating that the amendment after final rejection failed to place the application in condition for allowance.

5. On October 19, 2007, a Notice of Appeal was filed, along with a Pre-Appeal Brief Request for Review, and a petition for a one (1)-month extension of time. The one (1) month extension of time fee of $120.00 and $500.00 towards the notice of appeal fee were paid.

6. On November 13, 2007, a Notice of Panel Decision from Pre-Appeal Brief Review was mailed, stating the request filed on October 19, 2007, was improper because an additional $10.00 was required toward the Notice of Appeal fee. The Notice further state that a two (2) month extension of time was required, and that an additional $340.00 was due for the second month of the extension of time fee.

7. On December 10, 2007, a response was filed, including $940.00 ($930.00 towards the balance due for a three (3) month extension of time and $10.00 towards the balance due for the notice of appeal.)

8. On May 28, 2008, a Notice of Abandonment was mailed.

Petitioner asserts that a proper and timely response to the final Office action mailed on June 7, 2007, was filed.

Petitioner is correct that a proper and timely Notice of Appeal was filed on December 10, 2007. The application is abandoned, however, because an Appeal Brief in response to the Notice of Appeal was not timely filed.

37 CFR 41.37 states, in pertinent part:

> (a)
> (1) Appellant must file a brief under this section within two months from the date of filing the notice of appeal under § 41.31.
> (2) The brief must be accompanied by the fee set forth in § 41.20(b)(2)
>
> (b) On failure to file the brief, accompanied by the requisite fee, within the period specified in paragraph (a) of this section, the appeal will stand dismissed.

Furthermore, the Notice of Panel Decision from Pre-Appeal Brief Review mailed on November 13, 2007, stated that the time period continues to run from the receipt date of the Notice of Appeal. Accordingly, since the Notice of Appeal was filed with a three

(3) month extension of time on November 13, 2007, the Appeal Brief and fee were due not later than June 13, 2008, with a five (5) month extension of time. As a proper reply to the Notice to Appeal was not timely filed, the application is now abandoned.

37 CFR 1.135 states, in pertinent part:

> (a) If an applicant of a patent application fails to reply within the time period provided under § 1.134 and § 1.136, the application will become abandoned unless an Office action indicates otherwise.
>
> (b) Prosecution of an application to save it from abandonment pursuant to paragraph (a) of this section must include such complete and proper reply as the condition of the application may require. The admission of, or refusal to admit, any amendment after final rejection or any amendment not responsive to the last action, or any related proceedings, will not operate to save the application from abandonment.

Petitioner may wish to consider filing a petition to revive the application, accompanied by an appeal brief or a request for continued examination and submission under 37 CFR 1.114.

Any request for reconsideration must be filed within **TWO MONTHS** of the date of this decision. **This period may not be extended.**[1]

Further correspondence with respect to this matter should be addressed as follows:

By mail: Mail Stop Petitions
Commissioner for Patents
P.O. Box 1450
Alexandria, VA 22313-1450

By FAX: (571) 273-8300
Attn: Office of Petitions

By hand: Customer Service Window
Mail Stop Petitions
Randolph Building
401 Dulany Street
Alexandria, VA 22314

---

[1] 37 CFR 1.181(f).

Telephone inquiries concerning this matter may be directed to the undersigned at (571) 272-3231.

Douglas I. Wood
Senior Petitions Attorney
Office of Petitions

UNITED STATES PATENT AND TRADEMARK OFFICE

Commissioner for Patents
United States Patent and Trademark Office
P.O. Box 1450
Alexandria, VA 22313-1450
www.uspto.gov
DIW Nov-08

DENNIS M. FLAHERTY, ESQ.
OSTRAGER CHONG FLAHERTY & BROITMAN P.C.
570 LEXINGTON AVENUE
NEW YORK NY 10022-6894

COPY MAILED

NOV 1 8 2008

OFFICE OF PETITIONS

In re Application of	:	DECISION ON PETITION TO
Jimmy Lee Long	:	WITHDRAW HOLDING OF
Application Number: 10/612481	:	ABANDONMENT
Filing Date: 07/01/2003	:	
Attorney Docket Number: ITW-14146	:	

This is a decision on the "REQUEST FOR RECONSIDERATION OF PETITION TO WITHDRAW HOLDING OF ABANDONMENT PURSUANT TO 37 CFR 1.181(a)," which is treated as a renewed petition to withdraw the holding of abandonment, filed on October 20, 2008.

The petition is again **DISMISSED**.

A Notice of Abandonment was mailed on May 28, 2008, stating that the application is abandoned in view of applicant's failure to file a proper reply to the Office action mailed on June 7, 2007. The petition to withdraw the holding of abandonment filed on August 21, 2008, was dismissed on October 7, 2008.

Petitioner states, in pertinent part:

> In the October 7, 2008 Decision of Applicant's petition, the Office of Petitions stated that the instant application is abandoned because an Appeal Brief was not filed. Applicants respectfully submit that The Office of Petitions has overlooked the OG Notice stated July 12, 2005, which states that the appeal brief will not be due until the later of the two-month period set forth in 37 CFR 41.37 "*or one month from the mail date of the decision on the request.*" Since no panel decision has yet been mailed, the appeal brief is not yet due. Accordingly, Applicant submits that the holding of abandonment in this case is in error.

(emphasis in original)

Petitioner's argument has been considered, but is not persuasive. At the outset, it is noted that on November 13, 2007, a "Notice of Panel Decision from Pre-Appeal Brief Review" was mailed, in response to the Pre-Appeal Brief Request for Review filed on October 19, 2007, stating that the Request is improper and a conference will **not** be held.

Accordingly, petitioner was provided notice of the panel decision, and was informed that no conference would be held because the proper amount due for the Notice of Appeal fee and extension of time fee had not been paid.

Petitioner was further notified in said Notice of Panel Decision that the time period for filing a response continues to run from the receipt date of the Notice of Appeal or from the mail date of the last Office communication, if no Notice of Appeal has been received.

It is noted that petitioner acknowledged receipt of the Notice of Panel Decision in that a response, including a three (3) month extension of time and the balance due for the Notice of Appeal fee was filed on December 10, 2007.

Further, the *Official Gazette* Notice[1] states that a proper Notice of Appeal must be filed with the request. 37 CFR 41.31(a) states that an appeal to the Board of Patent Appeals and Interferences (Board) must include a notice of appeal plus the fee set forth in 41.20(b)(1). The O.G. Notice further states that: "A request that fails to comply with the above noted submission requirements may be dismissed." Here, applicants clearly failed to comply with the requirements in that the Notice of Appeal fee was deficient. Accordingly, a Notice of Panel Decision was mailed stating that no conference would be held was mailed. Applicant was informed that no conference would be held, and that, therefore, an Appeal Brief must be filed.

In summary, the showing of record is that petitioner was duly informed of the disposition of the application, and failed to timely file the required reply. Accordingly, the application is properly held abandoned.

---

[1] 1296 O.G. 67.

Petitioner may wish to consider filing a petition to revive the application, accompanied by an appeal brief or a request for continued examination and submission under 37 CFR 1.114.

Any request for reconsideration must be filed within **TWO MONTHS** of the date of this decision. **This period may not be extended.**[2]

Further correspondence with respect to this matter should be addressed as follows:

By mail: Mail Stop Petitions
Commissioner for Patents
P.O. Box 1450
Alexandria, VA 22313-1450

By FAX: (571) 273-8300
Attn: Office of Petitions

By hand: Customer Service Window
Mail Stop Petitions
Randolph Building
401 Dulany Street
Alexandria, VA 22314

Telephone inquiries concerning this matter may be directed to the undersigned at (571) 272-3231.

DWood

Douglas I. Wood
Senior Petitions Attorney
Office of Petitions

[2] 37 CFR 1.181(f).

UNITED STATES PATENT AND TRADEMARK OFFICE

Commissioner for Patents
United States Patent and Trademark Office
P.O. Box 1450
Alexandria, VA 22313-1450
www.uspto.gov
DIW Feb-09

DENNIS M. FLAHERTY, ESQ.
OSTRAGER CHONG FLAHERTY & BROITMAN P.C.
570 LEXINGTON AVENUE
NEW YORK NY 10022-6894

MAILED

FEB 17 2009

OFFICE OF PETITIONS

In re Application of	:	
Jimmy Lee Long	:	
Application Number: 10/612481	:	DECISION ON PETITION
Filing Date: 07/01/2003	:	
Attorney Docket Number: ITW-14146	:	

This is a decision on the petition under 37 CFR 1.137(b),[1] filed on December 22, 2008, to revive the above-identified application.

The petition is **GRANTED**.

The application became abandoned on February 11, 2008, for failure to timely submit an appeal brief in response to the Notice of Appeal and three (3)-month extension of time filed on

---

[1] Effective December 1, 1997, the provisions of 37 CFR 1.137(b) now provide that where the delay in reply was unintentional, a petition may be filed to revive an abandoned application or a lapsed patent pursuant to 37 CFR 1.137(b). A grantable petition filed under the provisions of 37 CFR 1.137(b) must be accompanied by:

(1) the required reply, unless previously filed. In a nonprovisional application abandoned for failure to prosecute, the required reply may be met by the filing of a continuing application. In a nonprovisional application filed on or after June 8, 1995, and abandoned for failure to prosecute, the required reply may also be met by the filing of a request for continued examination in compliance with § 1.114. In an application or patent, abandoned or lapsed for failure to pay the issue fee or any portion thereof, the required reply must be the payment of the issue fee or any outstanding balance thereof. In an application abandoned for failure to pay the publication fee, the required reply must include payment of the publication fee.

(2) the petition fee as set forth in 37 CFR 1.17(m);

(3) a statement that the entire delay in filing the required reply from the due date for the reply until the filing of a grantable petition pursuant to 37 CFR 1.137(b) was unintentional. The Director may required additional information where there is a question whether the delay was unintentional; and

(4) any terminal disclaimer (and fee as set forth in 37 CFR 1.20(d)) required pursuant to 37 CFR 1.137(c)).

December 10, 2007 (certificate of mailing date December 5, 2007).[2] Notice of Abandonment was mailed on May 28, 2008.

Applicant has filed an amendment after final rejection. As the examiner has determined the amendment places the application in condition for allowance, the response may be favorably considered.

The application is referred to Technology Center Art Unit 3721 for further processing.

Telephone inquiries concerning this matter may be directed to the undersigned at (571) 272-3231.

Douglas I. Wood
Senior Petitions Attorney
Office of Petitions

[2] The Notice of Appeal was originally submitted on October 19, 2007, but without the proper amount due for the Notice of Appeal Fee. The Notice of Appeal fee and a three (3) month extension of the time to reply to the final Office action mailed on June 7, 2007, was filed on December 10, 2007, with a certificate of mailing dated December 5, 2007.

UNITED STATES PATENT AND TRADEMARK OFFICE

COMMISSIONER FOR PATENTS
UNITED STATES PATENT AND TRADEMARK OFFICE
P.O. BOX 1450
ALEXANDRIA, VA 22313-1450
WWW.USPTO.GOV

Paper No. None

William D. Lanyi, Esq.
Mercury Marine
W6250 Pioneer Road
P.O. Box 1939
Fond du Lac WI 54936-1939

COPY MAILED

JUL 0 2 2004

OFFICE OF PETITIONS

In re Application of	:	
Jeffery M. Konopacki et al.	:	
Application No. 10/612,485	:	DECISION GRANTING
Filed: July 2, 2003	:	PETITION UNDER 37 C.F.R.
Attorney Docket No. M09626	:	§1.53(B)
Title: GASEOUS FUEL PRESSURE REGULATOR FOR ELECTRONICALLY CONTROLLING AN OUTLET PRESSURE	:	

This is a decision on the "Response to 'Notice of Omitted Items," filed October 15, 2003, which is properly treated as a petition under 37 CFR §1.1.53(b), requesting the application, including Figure 6, be accorded a filing date of July 2, 2003 as part of the original disclosure.

The application was deposited on July 2, 2003. However, on October 2, 2003, Initial Patent Examination Division mailed a Notice of Omitted Item(s) in a Nonprovisional Application - Filing Date Granted (notice) stating that Figure 6 appeared to have been omitted on filing.

In response, on October 15, 2003, applicants filed the present petition. The petition is further accompanied by a copy of Figure 6, along with a copy of applicants' postcard receipt acknowledging receipt of "6 sheets of drawings" in the United States Patent and Trademark Office (Office) on July 2, 2003. Applicants request that the application, including Figure 6 be accorded a filing date of July 2, 2003.

Upon review of the record, the above-mentioned figure has not been located among the application papers. However, the evidence is convincing that the application papers deposited on July 2,

2003 included Figure 6, and the sheet which contained this figure was subsequently misplaced in the Office.

Therefore, the application, including Figure 6 was complete on filing and entitled to a filing date of July 2, 2003 as part of the original disclosure.

Accordingly, the petition is **GRANTED**.

The notice mailed July 2, 2003 was sent in error. Therefore, no petition fee is necessary. The petition fee of $130 will be refunded to petitioner's Deposit Account.

The application file is being returned to the Office of Initial Patent Examination for further processing with a filing date of July 2, 2003, using the original application papers filed on that date, as well as Figure 6 of the specification submitted on October 15, 2003.

Any inquiries related to this decision should be directed to the undersigned at (703) 305-0011.

Paul Shanoski
Senior Attorney
Office of Petitions
United States Patent and Trademark Office

SPE RESPONSE FOR CERTIFICATE OF CORRECTION

Paper No.:20070409

DATE : April 10, 2007

TO SPE OF : ART UNIT 1644

SUBJECT : Request for Certificate of Correction on Patent No.: 7109003

A response is requested with respect to the accompanying request for a certificate of correction.

Please complete this form and return with file, within **7** days to:
Certificates of Correction Branch - PK 3-910
Palm location **7590** - Tel. No. 305-8201

With respect to the change(s) requested, correcting Office and/or Applicant's errors, should the patent read as shown in the certificate of correction? No new matter should be introduced, nor should the scope or meaning of the claims be changed.

Thank You For Your Assistance **Certificates of Correction Branch**

The request for issuing the above-identified correction(s) is hereby:
Note your decision on the appropriate box.

☒ **Approved** All changes apply.

☐ **Approved in Part** Specify below which changes **do not** apply.

☐ **Denied** State the reasons for denial below.

Comments:

Christina Chan

SPE: Christina Chan **Art Unit** 1644

UNITED STATES PATENT AND TRADEMARK OFFICE

UNITED STATES DEPARTMENT OF COMMERCE
United States Patent and Trademark Office
Address: COMMISSIONER FOR PATENTS
P.O. Box 1450
Alexandria, Virginia 22313-1450
www.uspto.gov

ROPES & GRAY LLP
PATENT DOCKETING 39/361
1211 AVENUE OF THE AMERICAS
NEW YORK, NY 10036-8704

Mail Date: 04/21/2010

Applicant	: Douglas Charles Hanson	: DECISION ON REQUEST FOR
Patent Number	: 7109003	: RECALCULATION of PATENT
Issue Date	: 09/19/2006	: TERM ADJUSTMENT IN VIEW
Appliction No	: 10/612,497	: OF WYETH
Filed	: 07/01/2003	:
		:

The Patentee's Request for Recalculation is **DISMISSED.**

This Request is deemed ineligible for consideration for one or more of the following reasons:

(A). The patent for which PTA recalculation is requested is either a design or reissue application or is a reexamination proceeding;

(B). The patent for which PTA recalculation is requested resulted from a utility or plant application filed under 35 USC 111(a) before May 29, 2000 and no CPA filed in the application on/after May 29, 2000;

(C). The patent for which PTA recalculation is requested resulted from an international application in which the international filing date was before May 29, 2000 and no CPA filed in the application on/after May 29, 2000;

(D). The patent for which PTA recalculation is requested issued on/after March 2, 2010;

(E). The Request for Recalculation was filed more than 180 days after the grant date of the patent and the request was not filed within two months of a dismissal of a request for reconsideration of the of the patent term under 37 CFR 1.705(d);

(F). The Request for Recalculation is not solely limited to USPTO pre-Wyeth interpretation of 35 U.S.C. 154(b)(2)(A);

or

(G). A civil action was filed pursuant to 35 U.S.C. 154(b)(4)(A)concerning the same patent at issue in this request.

Patentee may file a reply to this decision dismissing the Request for Recalculation. Patentee must file such reply within one month or thirty days, whichever is longer, of the mail date of the decision dismissing the Request for Recalculation. No fee is required if patentee is asserting in the reply that the dismissal for ineligibility is improper.

Patentee should use document code PET.OP if electronically filing a reply to this dismissal. If the USPTO finds that the request was improperly deemed ineligible, the USPTO will mail applicant a recalculation determination.

Patentee should be aware that in order to preserve the right to review in the United States District Court for the District of Columbia of the USPTO patent term adjustment determination, patentee must ensure that he or she also take the steps required under 35 U.S.C. 154(b)(4)(A). Nothing in the request for recalculation should be construed as providing an alternative time frame for commencing a civil action under 35 U.S.C. 154 (b)(4)(A).

Any questions concerning this decision should be directed to the Office of Patent Legal Administration at 571-272-7702.

UNITED STATES PATENT AND TRADEMARK OFFICE

UNITED STATES DEPARTMENT OF COMMERCE
United States Patent and Trademark Office
Address: COMMISSIONER FOR PATENTS
P.O. Box 1450
Alexandria, Virginia 22313-1450
www.uspto.gov

APPLICATION NO.	FILING DATE	FIRST NAMED INVENTOR	ATTORNEY DOCKET NO.	CONFIRMATION NO.
10/612,504	07/01/2003	Steven C. Shanks	206-038	3500

33354 7590 09/14/2007
ETHERTON LAW GROUP, LLC
5555 E. VAN BUREN STREET, SUITE 100
PHOENIX, AZ 85008

EXAMINER
JOHNSON III, HENRY M

ART UNIT	PAPER NUMBER
3739	

MAIL DATE	DELIVERY MODE
09/14/2007	PAPER

Please find below and/or attached an Office communication concerning this application or proceeding.

The time period for reply, if any, is set in the attached communication.

UNITED STATES PATENT AND TRADEMARK OFFICE

Commissioner for Patents
United States Patent and Trademark Office
P.O. Box 1450
Alexandria, VA 22313-1450
www.uspto.gov

ETHERTON LAW GROUP, LLC
5555 E. VAN BUREN STREET, SUITE 100
PHOENIX AZ 85008

In re Application of:
Shanks, Steven C. et al
Serial No. 10/612,504
Filed: Jul.1, 2003
Docket: 206-038
Title:
MULTI-PROBE LASER DEVICE

DECISION ON PETITION
UNDER 37 CFR § 1.181

This is a decision on the petition filed Jun. 29, 2007 under 37 CFR 1.181 requesting withdrawal of the Notification of Non-Compliant Appeal Brief issued on Jun. 5, 2007.

The petition is granted.

In finding petitioner's points of argument persuasive and after consultation with the examiner, the requested relief is granted. It was determined that the rejection of claims 3-7 and 16-22 under 35 U.S.C. 103(a) as being unpatentable over U.S. Patent 6,074,411 to Lai et al. in view of U.S. Patent 6,267,779 to Gerdes was withdrawn in the non-final Office action mailed on Sep. 28, 2006 in view of the arguments advanced by the applicant in the appeal brief filed on Aug. 2, 2006. The Notification of Non-Compliant Appeal Brief issued on Jun. 5, 2007 is hereby withdrawn. The examiner has been directed in his next Office action or by a separate letter to expressly state the reason for withdrawal of the rejection of claims 3-7 and 16-22 under 35 U.S.C. 103(a) as being unpatentable over Lai et al. in view of Gerdes in accordance with the MPEP 707.07(f)[1].

The application is being forwarded to Examiner Johnson of Art Unit 3739 for explanation of the withdrawal of rejection as noted above. Any inquiry regarding this decision should be directed to Henry C. Yuen, Special Programs Examiner at (571) 272-4856.

PETITION GRANTED.

Karen M. Young

Karen M. Young, Director
Technology Center 3700

[1] Relevant portion of MPEP 707.07(f) [R-3] Answer All Material Traversed In order to provide a complete application file history and to enhance the clarity of the prosecution history record, an examiner must provide clear explanations of all actions taken by the examiner during prosecution of an application. Where the requirements are traversed, or suspension thereof requested, the examiner should make proper reference thereto in his or her action on the amendment. Where the applicant traverses any rejection, the examiner should, if he or she repeats the rejection, take note of the applicant's argument and answer the substance of it. If applicant's arguments are persuasive and upon reconsideration of the rejection, the examiner determines that the previous rejection should be withdrawn, the examiner must provide in the next Office communication the reasons why the previous rejection is withdrawn by referring specifically to the page(s) and line(s) of applicant's remarks which form the basis for withdrawing the rejection. It is not acceptable for the examiner to merely indicate that all of applicant's remarks form the basis for withdrawing the previous rejection. Form paragraph 7.38.01 may be used.

UNITED STATES PATENT AND TRADEMARK OFFICE

Commissioner for Patents
United States Patent and Trademark Office
P.O. Box 1450
Alexandria, VA 22313-1450
www.uspto.gov

ETHERTON LAW GROUP, LLC
5555 E. VAN BUREN STREET, SUITE 100
PHOENIX AZ 85008

8/1/08

In re Application of:
SHANKS, STEVEN C. et al
Serial No.: 10/612,504
Filed: Jul. 1, 2003
Docket: 2065-038
Title: MULTI-PROBE LASER DEVICE

DECISION ON PETITION TO ISSUE CLEAR OFFICE ACTION
37 CFR 1.181

This is a decision on the petition filed Nov. 30, 2007 to request the examiner to issue a corrected examiner's answer in response to the applicant's appeal brief filed on Mar. 5, 2007. The petition is being considered pursuant to 37 CFR 1.181 and no fee is required for the petition.

The petition is **GRANTED**.

In her Nov. 30, 2007 petition, petitioner requests the examiner to issue a corrected examiner's answer responsive to the Mar. 5, 2007 appeal brief because in the previous examiner's answer of Nov. 1, 2007 did not fully address the withdrawal of obviousness rejections based on the combination of Lai and Gerdes patents with respect to claims 23-29. Dues to the fact the Notification of Non-compliant brief was withdrawn, petitioner request that the examiner answer should have been directed to the original appeal brief of Mar. 5, 2007.

After consulting with the examiner, it was agreed that a corrected examiner answer responsive to the Mar. 5, 2007 appeal brief must be issued in order to meaningfully advance the prosecution. The previous examiner's answer of Nov. 1, 2007 is herby withdrawn. The examiner has been requested to issue a new examiner answer in due course.

The application is being forwarded to the Supervisory Patent Examiner of Art Unit 3739 for preparation of a corrected examiner's answer. Any inquiry regarding this decision should be directed to Henry Yuen, Special Programs Examiner, at (571) 272-4856.

PETITION GRANTED

Frederick R. Schmidt, Director
Technology Center 3700

UNITED STATES PATENT AND TRADEMARK OFFICE

COMMISSIONER FOR PATENTS
UNITED STATES PATENT AND TRADEMARK OFFICE
P.O. BOX 1450
ALEXANDRIA, VA 22313-1450
www.uspto.gov

APR - 6 2004

MAILED

APR - 6 2004

OFFICE OF THE DIRECTOR
TC 3600

Carl M. Davis II
Baker, Donelson, Bearman Caldwell & Berkowitz
Suite 900
Five Concourse Parkway
Atlanta GA 30328

In re application of	:	**DECISION ON PETITION**
Edwin Lee Nix	:	**TO MAKE SPECIAL**
Application No. 10/612,514	:	**(APPLICANT'S AGE)**
Filed: July 2, 2003	:	
For: BED RAIL WITH INDICIA-BEARING PANEL FOR PICKUP TRUCKS		

This is a decision on the petition submitted on August 14, 2003 under 37 CFR 1.102 (c) to make the above-identified application special under the accelerated examination procedure set forth in MPEP 708.02, Section IV: Applicant's Age. The delay in deciding this petition is regretted.

The petition is **GRANTED**.

An application may be accorded special status upon the filing of a petition providing evidence showing that the applicant is at least 65 years old. Such a showing may be provided by evidence such as a birth certificate or a statement from the applicant.

The evidence submitted with the petition is a declaration signed by Mr. Nix indicating that he is at least 65 years of age.

The examiner is directed (1) to make an interference search for possible interfering applications, (2) to promptly examine this application out of turn, and (3) if any interfering application is discovered, to examine such application simultaneously and state in the first official letter of such application that it is being taken out of turn because of a possible interference.

Petitioner is advised that this application will continue to be special, throughout its entire prosecution and pendency, including interference or appeal, if any, only if petitioner makes a prompt ***bona fide*** effort, in response to each Office action, to place the application in condition for allowance, even if it is necessary to conduct an interview with the examiner to accomplish this purpose.

SUMMARY: Petition to Make Special **GRANTED**.

Kenneth J. Dorner
Special Programs Examiner
Technology Center 3600
(703) 308-0866

KJD/mjz: 4/5/04

UNITED STATES PATENT AND TRADEMARK OFFICE

Commissioner for Patents
United States Patent and Trademark Office
P.O. Box 1450
Alexandria, VA 22313-1450
www.uspto.gov

JOSEPH E. CASTERLINE
4839 E. RAIL - N ROAD
TUCSON AZ 85739

COPY MAILED

NOV 0 3 2005

OFFICE OF PETITIONS

In re Application of :
Joseph Edward Casterline :
Application No. 10/612,526 :
Filed: July 2, 2003 :
Title of Invention: **HYDRAULIC CONTROL SYSTEM FOR A VARIABLE COMPRESSION RATIO INTERNAL COMBUSTION ENGINE** :

ON PETITION

This is a decision on the petition filed July 6, 2005 under 37 CFR 1.137(b),[1] to revive the above-identified application.

The petition under 37 CFR 1.137 (b) is **GRANTED**.

This application became abandoned June 3, 2005 for failure to timely pay the issue fee on or before June 2, 2005. The instant petition and this decision precede the mailing of the Notice of Abandonment.

The issue fee, petition fee and publication fee have been applied. All other requirements of 37 CFR 1.137(b) having now been met, this application file is being forwarded to the Publishing Division to be processed into a patent.

Telephone inquiries concerning this matter may be directed to the undersigned Petitions Attorney at (571) 272-3212.

Patricia Faison-Ball

Patricia Faison-Ball
Senior Petitions Attorney
Office of Petitions

---

[1]Effective December 1, 1997, the provisions of 37 CFR 1.137(b) now provide that where the delay in reply was unintentional, a petition may be filed to revive an abandoned application or a lapsed patent pursuant to 37 CFR 1.137(b). A grantable petition filed under the provisions of 37 CFR 1.137(b) must be accompanied by:

(1) the required reply, unless previously filed. In a nonprovisional application abandoned for failure to prosecute, the required reply may be met by the filing of a continuing application. In a nonprovisional application filed on or after June 8, 1995, and abandoned for failure to prosecute, the required reply may also be met by the filing of a request for continued examination in compliance with § 1.114. In an application or patent, abandoned or lapsed for failure to pay the issue fee or any portion thereof, the required reply must be the payment of the issue fee or any outstanding balance thereof.

(2) the petition fee as set forth in 37 CFR 1.17(m);

(3) a statement that the entire delay in filing the required reply from the due date for the reply until the filing of a grantable petition pursuant to 37 CFR 1.137(b) was unintentional. The Commissioner may required additional information where there is a question whether the delay was unintentional; and

(4) any terminal disclaimer (and fee as set forth in 37 CFR 1.20(d)) required pursuant to 37 CFR 1.137(c)).

UNITED STATES PATENT AND TRADEMARK OFFICE

UNITED STATES DEPARTMENT OF COMMERCE
United States Patent and Trademark Office
Address: COMMISSIONER FOR PATENTS
P.O. Box 1450
Alexandria, Virginia 22313-1450
www.uspto.gov

APPLICATION NO.	FILING DATE	FIRST NAMED INVENTOR	ATTORNEY DOCKET NO.	CONFIRMATION NO.
10/612,553	07/01/2003	Jim Neeb	5038-265	3621

32231 7590 10/17/2005

MARGER JOHNSON & MCCOLLOM, P.C.
210 SW MORRISON STREET, SUITE 400
PORTLAND, OR 97204

EXAMINER
TANG, MINH NHUT

ART UNIT	PAPER NUMBER
2829	

DATE MAILED: 10/17/2005

Please find below and/or attached an Office communication concerning this application or proceeding.

UNITED STATES PATENT AND TRADEMARK OFFICE

Commissioner for Patents
United States Patent and Trademark Office
P.O. Box 1450
Alexandria, VA 22313-1450
www.uspto.go

In re Patent No. NEEB, JIM	:	
Issue Date: 5/17/2005	:	**DECISION GRANTING**
Appl No.: 10/612,553	:	**PETITION**
Filed: July 01, 2003	:	*37 CFR 1.324*
For: System and Method for Testing Semiconductor Devices	:	

This is a decision on the petition under 37 CFR 1.48, filed November 10, 2003. In view of the fact that the patent has already issued, the request under 37 CFR 1.48 has been treated as a petition to correct inventorship under 37 CFR 1.324.

The petition is granted.

The patented file is being forwarded to Certificate of Corrections Branch for issuance of a certificate naming only the actual inventor or inventors.

Nestor R. Ramirez
Supervisory Patent Examiner
Art Unit 2800
Patent Examining Group 2829

MARGER JOHNSON & MCCOLLOM, P.C.
210 SW MORRISON STREET, SUITE 400
PORTLAND, OR 97204

UNITED STATES PATENT AND TRADEMARK OFFICE

Commissioner for Patents
United States Patent and Trademark Office
P.O. Box 1450
Alexandria, VA 22313-1450
www.uspto.gov
DIW May-07

GARLICK HARRISON & MARKISON
P.O. BOX 160727
AUSTIN TX 78716-0727

COPY MAILED

MAY 0 8 2007

OFFICE OF PETITIONS

In re Application of	:	
Henson et al.	:	DECISION ON PETITION TO
Application No. 10/612577	:	WITHDRAW HOLDING OF
Filed: 07/02/2003	:	ABANDONMENT
Attorney Docket No. SIG000098	:	

This is a decision on the petition filed on 27 February, 2007, to withdraw the holding of abandonment in the above-identified application.

The petition is **GRANTED**.

The application was held abandoned for failure to timely submit the issue and publication fees in response to the Notice of Allowance and Fee(s) Due mailed on 22 September, 2006, which set a three (3) month statutory period for reply. Notice of Abandonment was mailed on 23 January, 2007.

Petitioner asserts that the Notice mailed on 22 September, 2006, was never received.

In the absence of any irregularity in the mailing of the Notice of Allowance, there is a strong presumption that the Notice of Allowance was properly mailed to practitioner at the address of record. This presumption may be overcome by a showing that the Notice of Allowance was not in fact received. The showing required to establish the failure to receive an Office communication must include a statement from the practitioner stating that the Office communication was not received by the practitioner and attesting to the fact that a search of the file jacket and docket records indicates that the Office communication was not received. A copy of the docket record where the non-received Office communication would have been entered had it been received and docketed must be attached to and referenced in practitioner's statement. See "Withdrawing the Holding of Abandonment When Office Actions Are Not Received" 1156 Official

Gazette 53 (November 16, 1993) and M.P.E.P. § 711.03(c). The showing outlined above may not be sufficient if there are circumstances that point to a conclusion that the Office communication may have been lost after receipt rather than a conclusion that the Office communication was lost in the mail.

A review of the record indicates that the Notice of Allowance and Fee(s) Due was properly mailed to petitioner at the correspondence address of record at the time of mailing. Thus, there was no irregularity in mailing the Office action on the part of the United States Patent and Trademark Office.

In support of the petition, the petitioner's counsel, registered patent attorney Bruce E. Stuckman, asserts that a search of the file jacket and docket records indicates that the Notice of Allowance was not received. Additionally, a copy of the docket report where the Office action would have been docketed and entered had it been received has been provided and has been referenced in the practitioner's statement.

The petitioner has made a sufficient showing of nonreceipt of the Office action. Accordingly, the Notice of Abandonment is hereby vacated and the holding of abandonment withdrawn.

The petition is **GRANTED.**

The application file is being referred to Technology Center 2800 technical support staff for remailing of the Notices mailed on 22 September, 2006. The period for reply will be reset from the mailing date thereof.

Telephone inquiries concerning this matter may be directed to the undersigned at (571)272-3231.

D Wood

Douglas I. Wood
Senior Petitions Attorney
Office of Petitions

UNITED STATES PATENT & TRADEMARK OFFICE
UNDER SECRETARY OF COMMERCE FOR INTELLECTUAL PROPERTY AND DIRECTOR OF THE UNITED STATES PATENT AND TRADEMARK OFFICE
Washington, D.C. 20231

Arthur C. Szatkowski
1860 Sandpiper Street
Naples, FL 34102

In re Patent No.	6,789,710	:	
Issue Date:	September 14, 2004	:	
Serial No.	10/612,581	:	ON PETITION
Filed:	July 3, 2003	:	TO CORRECT
For:	BODY CARRIED BABY SEAT	:	INVENTORSHIP
		:	UNDER 37 CFR 1.324

This is a decision on the petition filed May 8, 2006 to correct inventorship under 37 CFR 1.324.

The petition is **DISMISSED.**

A petition to correct inventorship as provided by 37 CFR 1.324(b) requires (1) a statement from each person who is being added as an inventor and from each person who is being deleted as an inventor that the inventorship error occurred without any deceptive intention on their part, (2) a statement from the current named inventor(s) who have not submitted a statement as per (b)(1) either agreeing to the change of inventorship or stating that they have no disagreement in regard to the requested change, (3) a statement from all assignees of the parties submitting a statement under (b)(1) and (b)(2) agreeing to the change of inventorship in the patent, which statement must comply with the requirements of 37 CFR 3.73(b); and (4) the fee set forth in 37 CFR 1.20(b) (See MPEP 1481).

This petition lacks item(s) (1) and (4), as stated above.

Peter M. Cuomo
Supervisory Patent Examiner
Art Unit 3636

UNITED STATES PATENT AND TRADEMARK OFFICE

Commissioner for Patents
United States Patent and Trademark Office
P.O. Box 1450
Alexandria, VA 22313-1450
www.uspto.gov

JONES DAY
222 EAST 41ST STREET
NEW YORK NY 10017-6702

MAILED

MAY 28 2009

OFFICE OF PETITIONS

In re Application
Neil T. Parkin et al.
Application No. 10/612,600
Filed: July 1, 2003
Attorney Docket No. **011068-015-999**

: DECISION ON APPLICATION
: FOR PATENT TERM ADJUSTMENT

This is in response to the "REQUEST FOR RECONSIDERATION OF PATENT TERM ADJUSTMENT UNDER 37 C.F.R. § 1.705(b)" filed May 5, 2009. Applicant requests that the determination of patent term adjustment be corrected from two hundred seventy-four (274) days to one thousand four hundred nineteen (1419) days. Applicant requests this correction on the basis that the Office will take in excess of three years to issue this patent and in light of the recent court decision in Wyeth v. Dudas, No. 07-1492 (D.D.C. September 30, 2008).

As the instant application for patent term adjustment requests reconsideration of the patent term adjustment as it relates to the Office's failure to issue the patent within 3 years of the filing date, a decision is being **held in abeyance** until after the actual patent date. Knowledge of the actual date the patent issues is required to calculate the amount, if any, of additional patent term patentee is entitled to for Office failure to issue the patent within 3 years. See § 1.703(b).

Applicant is given TWO (2) MONTHS from the issue date of the patent to file a written request for reconsideration of the patent term adjustment for Office failure to issue the patent within 3 years. A copy of this decision should accompany the request. Applicant may seek such consideration without payment of an additional fee. However, as to all other bases for seeking reconsideration of the patent term adjustment indicated in the patent, all requirements of § 1.705(d) must be met. Requests for reconsideration on other bases must be timely filed and must include payment of the required fee.

Rather than file the request for reconsideration of Patent Term Adjustment at the time of the mailing of the notice of allowance, applicant is advised that they may wait until the time of the issuance of the patent and file a request for reconsideration of the patent term pursuant to 37 CFR 1.705(d). The USPTO notes that it does not calculate the amount of time earned pursuant to 37 CFR 1.702(b) until the time of the issuance of the patent and accordingly, the Office will consider any request for reconsideration of the patent term adjustment due to an error in the calculation of 37 CFR 1.702(b) to be

timely if the request for reconsideration is filed within two months of the issuance of the patent.

The Office acknowledges submission of the $200.00 fee set forth in 37 CFR 1.18(e). No additional fees are required.

The application is being forwarded to the Office of Data Management for issuance of the patent. The patent term adjustment indicated on the patent (as shown on the Issue Notification mailed about three weeks prior to patent issuance) will include any additional adjustment accrued both for Office delay in issuing the patent more than four months after payment of the issue fee and satisfaction of all outstanding requirements, and for the Office taking in excess of three years to issue the patent (to the extent that the three-year period does not overlap with periods already accorded).

Telephone inquiries specific to this decision should be directed to Senior Petitions Attorney Patricia Faison-Ball at (571) 272-3212.

Kery A. Fries
Senior Legal Advisor
Office of Patent Legal Administration
Office of Deputy Commissioner
for Examination Policy

OIPE IAP87 OCT 19 2005 PATENT & TRADEMARK OFFICE

8 FW

PTO/SB/83 (04-05)
Approved for use through 11/30/2005. OMB 0651-0035
U.S. Patent and Trademark Office, U.S. DEPARTMENT OF COMMERCE
Under the Paperwork Reduction Act of 1995, no persons are required to respond to a collection of information unless it displays a valid OMB control number.

REQUEST FOR WITHDRAWAL AS ATTORNEY OR AGENT AND CHANGE OF CORRESPONDENCE ADDRESS

Application Number	10/612,627
Filing Date	July 2, 2003
First Named Inventor	Trevor Nottage, et al.
Art Unit	1772
Examiner Name	Michael C. Miggins
Attorney Docket Number	F-8301

To: Commissioner for Patents
P.O. Box 1450
Alexandria, VA 22313-1450

Approved 3/20/06
Jacqueline M. Stone
Jacqueline M. Stone, Director
Technology Center 1700

Please withdraw me as attorney or agent for the above identified patent application, and

- [ ] all the attorneys/agents of record.
- [ ] the attorneys/agents (with registration numbers) listed on the attached paper(s), or
- [X] the attorneys/agents associated with Customer Number 24131

NOTE: This box can only be checked when the power of attorney of record in the application is to all the practitioners associated with a customer number.

The reasons for this request are: Client failed to make payment for our services rendered and failed to send us any instructions to take action.

CORRESPONDENCE ADDRESS

1. [ ] The correspondence address is NOT affected by this withdrawal.
2. [X] Change the correspondence address and direct all future correspondence to:

[ ] The address associated with Customer Number:

OR

[X] Firm or Individual Name	Trevor Nottage		
Address	Harrington House Private Management Services, Ltd. Meris at Leeward		
City	Nassau	State	Zip N-9015
Country	Bahamas		
Telephone	242-457-4580	Email	nott1@coralwave.com
Signature			
Name	Laurence A. Greenberg	Registration No.	29,308
Date		Telephone No.	954-925-1100

NOTE: Withdrawal is effective when approved rather than when received. Unless there are at least 30 days between approval of withdrawal and the expiration date of a time period for response or possible extension period, the request to withdraw is normally disapproved.

This collection of information is required by 37 CFR 1.36. The information is required to obtain or retain a benefit by the public which is to file (and by the USPTO to process) an application. Confidentiality is governed by 35 U.S.C. 122 and 37 CFR 1.11 and 1.14. This collection is estimated to take 12 minutes to complete, including gathering, preparing, and submitting the completed application form to the USPTO. Time will vary depending upon the individual case. Any comments on the amount of time you require to complete this form and/or suggestions for reducing this burden, should be sent to the Chief Information Officer, U.S. Patent and Trademark Office, U.S. Department of Commerce, P.O. Box 1450, Alexandria, VA 22313-1450. DO NOT SEND FEES OR COMPLETED FORMS TO THIS ADDRESS. SEND TO: **Commissioner for Patents, P.O. Box 1450, Alexandria, VA 22313-1450.**

If you need assistance in completing the form, call 1-800-PTO-9199 and select option 2.

UNITED STATES PATENT AND TRADEMARK OFFICE

Commissioner for Patents
United States Patent and Trademark Office
P.O. Box 1450
Alexandria, VA 22313-1450
www.uspto.gov

Apple/Fenwick
Silicon Valley Center
801 California Street
Mountain View, CA 94041

COPY MAILED

AUG 29 2008

OFFICE OF PETITIONS

In re Application of	:	
Michael Stochosky	:	
Application No. 10/612,632	:	DECISION ON PETITION
Filed: July 1, 2003	:	TO WITHDRAW
Attorney Docket No. 2095.004100	:	FROM RECORD
	:	

This is a decision on the Request to Withdraw as attorney or agent of record under 37 C.F.R. § 1.36(b), filed June 23, 2007.

The request is **NOT APPROVED** because it is moot.

A review of the file record indicates that the power of attorney to Apple/Fenwick has been revoked by the assignee of the patent application on July 17, 2007. Accordingly, the request to withdraw under 37 C.F.R. § 1.36(b) is moot.

All future communications from the Office will continue to be directed to the below-listed address until otherwise notified by applicant.

Telephone inquires concerning this decision should be directed to Terri Williams at 571-272-2991.

T. Williams

Terri Williams
Petitions Examiner
Office of Petitions

cc: **Williams, Morgan & Amerson, P.C.**
10333 Richmond Avenue
Suite 1100
Houston, TX 77042

UNITED STATES PATENT AND TRADEMARK OFFICE

Commissioner for Patents
United States Patent and Trademark Office
P.O. Box 1450
Alexandria, VA 22313-1450
www.uspto.gov

Dr. Max Fogiel
44 Maple Court
Highland Park NJ 08904

COPY MAILED

NOV 29 2007

OFFICE OF PETITIONS

In re Application of ADRIAN et al. Application No. 10/612,635 Filed: 07/02/2003 Attorney Docket No. ASSEMBLY FOR SEALING AND CENTERING IN A TWO-CYLINDER DASHPOT OR TWO-CYLINDER TELESCOPING LEG	: : : : : : : : :	DECISION ON PETITION

This is a decision on the "REQUEST TO WITHDRAW THE HOLDING OF ABANDONMENT," filed July 30, 2007, which is being treated as a petition under 37 CFR 1.181.

The petition is **DISMISSED**.

Any request for reconsideration of this decision should be filed within two (2) months from the mail date of this decision. *Note* 37 CFR 1.181(f). The request for reconsideration should include a cover letter and be entitled as a "Renewed Petition under 37 CFR 1.181 to Withdraw the Holding of Abandonment."

This application was held abandoned for failure to reply to the Notice of Non-Compliant Amendment mailed February 6, 2006, which set an extendable period of one month or thirty days, whichever was longer, to reply. A Notice of Abandonment was mailed on May 2, 2007.

The practitioner asserted that he did not receive the Notice of Non-Compliant Amendment. The practitioner indicated that the practitioner's offices were searched extensively, but that Notice of February 6, 2006 was not found. Accordingly, petitioners requested that the Office withdraw the holding of abandonment, re-mail the Notice of Non-Compliant Amendment, and re-start the period for reply.

A review of the written record indicates no irregularity in the mailing of the Office action, and, in the absence of any irregularity, there is a strong presumption that the Office action was properly mailed to the practitioner at the address of record. This presumption may be overcome by a showing that the

Office action was not in fact received. In this regard, the showing required to establish the failure to receive the Office action must consist of the following:

1. a statement from practitioner stating that the Office action was not received by the practitioner;

2. a statement from the practitioner attesting to the fact that a search of the file jacket and docket records indicates that the Office action was not received; and

3. a copy of the docket record where the non-received Office action would have been entered had it been received must be attached to and referenced in the practitioner's statement.

See MPEP § 711.03(c) under subheading "Petition to Withdraw Holding of Abandonment Based on Failure to Receive Office Action," and "Withdrawing the Holding of Abandonment When Office Actions Are Not Received," 1156 Official Gazette 53 (November 16, 1993).

The petition fails to satisfy requirement (3).

Accordingly, absent a copy of the docket records to establish non-receipt of the Notice of Non-Compliant Amendment, the petition requesting withdrawal of the holding of abandonment cannot be granted at this time.

If petitioners cannot supply the evidence necessary to withdraw the holding of abandonment, or simply does not wish to, petitioners should consider filing a petition under 37 CFR 1.137(b). The provisions of 37 CFR 1.137(b) provide that where the delay in reply was unintentional, a petition may be filed to revive an abandoned application or a lapsed patent pursuant to 37 CFR 1.137(b). A grantable petition pursuant to 37 CFR 1.137(b) must be accompanied by:

(1) The reply required to the outstanding Office action or notice, unless previously filed.

(2) The petition fee as set forth in 37 CFR 1.17(m);

(3) A statement that the entire delay in filing the required reply from the due date for the reply until the filing of a grantable petition was unintentional. The Director may require additional information where there is a question whether the delay was unintentional; and

(4) Any terminal disclaimer (and fee set forth in § 1.20(d)) required pursuant to § 1.137(d).

A copy of the Notice of Non-Compliant Amendment accompanies this decision for petitioners' convenience.

Further correspondence with respect to this matter should be addressed as follows:

By Mail: Mail Stop PETITION
Commissioner for Patents
P. O. Box 1450
Alexandria, VA 22313-1450

By hand: U. S. Patent and Trademark Office
Customer Service Window, Mail Stop Petitions
Randolph Building
401 Dulany Street
Alexandria, VA 22314

By facsimile: (571) 273-8300
Attn: Office of Petitions

Correspondence may also be submitted via the USPTO's electronic filing system.

Telephone inquiries concerning this decision should be directed to the undersigned at (571) 272-3211.

Christina Tartera Donnell

Christina Tartera Donnell
Senior Petitions Attorney
Office of Petitions

UNITED STATES PATENT AND TRADEMARK OFFICE

UNITED STATES DEPARTMENT OF COMMERCE
United States Patent and Trademark Office
Address: COMMISSIONER FOR PATENTS
P.O. Box 1450
Alexandria, Virginia 22313-1450
www.uspto.gov

APPLICATION NO.	FILING DATE	FIRST NAMED INVENTOR	ATTORNEY DOCKET NO.	CONFIRMATION NO.
10/612,635	07/02/2003	Adolf Adrian		3661

7590 02/06/2006

Dr. Max Fogiel
44 Maple Court
Highland Park, NJ 08904

EXAMINER
BURCH, MELODY M

ART UNIT	PAPER NUMBER
3683	

DATE MAILED: 02/06/2006

Please find below and/or attached an Office communication concerning this application or proceeding.

Notice of Non-Compliant Amendment (37 CFR 1.121)	Application No. 10/612635	Applicant(s) Adrian et al	
	Examiner Melody M. Burch	Art Unit 3683	

– The MAILING DATE of this communication appears on the cover sheet with the correspondence address –

The amendment document filed on *14 November 2005* is considered non-compliant because it has failed to meet the requirements of 37 CFR 1.121. In order for the amendment document to be compliant, correction of the following item(s) is required.

THE FOLLOWING MARKED (X) ITEM(S) CAUSE THE AMENDMENT DOCUMENT TO BE NON-COMPLIANT:

- ☐ 1. Amendments to the specification:
  - ☐ A. Amended paragraph(s) do not include markings.
  - ☐ B. New paragraph(s) should not be underlined.
  - ☐ C. Other _____.
- ☐ 2. Abstract:
  - ☐ A. Not presented on a separate sheet. 37 CFR 1.72.
  - ☐ B. Other _____.
- ☐ 3. Amendments to the drawings:
  - ☐ A. The drawings are not properly identified in the top margin as "Replacement Sheet," "New Sheet," or "Annotated Sheet" as required by 37 CFR 1.121(d).
  - ☐ B. The practice of submitting proposed drawing correction has been eliminated. Replacement drawings showing amended figures, without markings, in compliance with 37 CFR 1.84 are required.
  - ☐ C. Other _____.
- ☒ 4. Amendments to the claims:
  - ☒ A. A complete listing of all of the claims is not present.
  - ☐ B. The listing of claims does not include the text of all pending claims (including withdrawn claims)
  - ☐ C. Each claim has not been provided with the proper status identifier, and as such, the individual status of each claim cannot be identified. Note: the status of every claim must be indicated after its claim number by using one of the following status identifiers: (Original), (Currently amended), (Canceled), (Previously presented), (New), (Not entered), (Withdrawn) and (Withdrawn-currently amended).
  - ☐ D. The claims of this amendment paper have not been presented in ascending numerical order.
  - ☐ E. Other: _____.

For further explanation of the amendment format required by 37 CFR 1.121, see MPEP § 714 and the USPTO website at http://www.uspto.gov/web/offices/pac/dapp/opla/preognotice/officeflyer.pdf .

TIME PERIODS FOR FILING A REPLY TO THIS NOTICE:

1. Applicant is given **no new time period** if the non-compliant amendment is an after-final amendment or an amendment filed after allowance. If applicant wishes to resubmit the non-compliant after-final amendment with corrections, the **entire corrected amendment** must be resubmitted within the time period set forth in the final Office action.

2. Applicant is given **one month**, or thirty (30) days, whichever is longer, from the mail date of this notice to supply the **corrected section** of the non-compliant amendment in compliance with 37 CFR 1.121, if the non-compliant amendment is one of the following: a preliminary amendment, a non-final amendment (including a submission for a request for continued examination (RCE) under 37 CFR 1.114), a supplemental amendment filed within a suspension period under 37 CFR 1.103(a) or (c), and an amendment filed in response to a *Quayle* action.

   Extensions of time are available under 37 CFR 1.136(a) only if the non-compliant amendment is a non-final amendment or an amendment filed in response to a *Quayle* action.

   Failure to timely respond to this notice will result in:
   Abandonment of the application if the non-compliant amendment is a non-final amendment or an amendment filed in response to a *Quayle* action; or
   Non-entry of the amendment if the non-compliant amendment is a preliminary amendment or supplemental amendment.

Eric V. Burns Burns (571) 272-6580

UNITED STATES PATENT AND TRADEMARK OFFICE

Commissioner for Patents
United States Patent and Trademark Office
P.O. Box 1450
Alexandria, VA 22313-1450
www.uspto.gov

Dr. Max Fogiel
44 Maple Court
Highland Park NJ 08904

COPY MAILED

JAN 1 5 2008

OFFICE OF PETITIONS

In re Application of ADRIAN et al. Application No. 10/612,635 Filed: 07/02/2003 Attorney Docket No. ASSEMBLY FOR SEALING AND CENTERING IN A TWO-CYLINDER DASHPOT OR TWO-CYLINDER TELESCOPING LEG	: : : : : : : : :	DECISION ON PETITION

This is a decision on the RENEWED PETITION UNDER 37 CFR 1.181 TO WITHDRAW THE HOLDING OF ABANDONMENT," filed December 20, 2007.

This application was held abandoned for failure to reply to the Notice of Non-Compliant Amendment mailed February 6, 2006, which set an extendable period of one month or thirty days, whichever was longer, to reply. A Notice of Abandonment was mailed on May 2, 2007.

The practitioner asserted that he did not receive the Notice of Non-Compliant Amendment. The practitioner indicated that the practitioner's offices were searched extensively, but that Notice of February 6, 2006, was not found. Accordingly, petitioners requested that the Office withdraw the holding of abandonment, re-mail the Notice of Non-Compliant Amendment, and re-start the period for reply.

A review of the written record indicates no irregularity in the mailing of the Office action, and, in the absence of any irregularity, there is a strong presumption that the Office action was properly mailed to the practitioner at the address of record. This presumption may be overcome by a showing that the Office action was not in fact received. In this regard, the showing required to establish the failure to receive the Office action must consist of the following:

1. a statement from practitioner stating that the Office action was not received by the practitioner;

2. a statement from the practitioner attesting to the fact that a search of the file jacket and docket records indicates that the Office action was not received; and

3. a copy of the docket record where the non-received Office action would have been entered had it been received must be attached to and referenced in the practitioner's statement.

See MPEP § 711.03(c) under subheading "Petition to Withdraw Holding of Abandonment Based on Failure to Receive Office Action," and "Withdrawing the Holding of Abandonment When Office Actions Are Not Received," 1156 Official Gazette 53 (November 16, 1993).

The petition satisfies the above-stated requirements. Accordingly, the petition under 37 CFR 1.181 is **granted** and the holding of abandonment is hereby withdrawn.

This application is being referred to the Technology Center technical support staff of Art Unit 3683 for re-mailing of the Notice of Non-Compliant Amendment of February 6, 2006. The period for reply will run from the date of the re-mailing of the Notice.

Telephone inquiries concerning this decision should be directed to the undersigned at (571) 272-3211.

Christina T. Donnell

Christina Tartera Donnell
Senior Petitions Attorney
Office of Petitions

SPE RESPONSE FOR CERTIFICATE OF CORRECTION

Paper No.: _____

DATE : 01/13/07

TO SPE OF : ART UNIT 3764

SUBJECT : Request for Certificate of Correction for Appl. No.: **10/612645** Patent No.: **7141002**

Please respond to this request for a certificate of correction within 7 days.

Please review the requested changes/corrections as shown in the **COCIN** document(s) in the IFW application image. No new matter should be introduced, nor should the scope or meaning of the claims be changed.

Please complete the response (see below) and forward the completed response to scanning using document code **COCX**.

Angela Green
Certificates of Correction Branch
703.308.9380 ext. 123

Thank You For Your Assistance

The request for issuing the above-identified correction(s) is hereby:
Note your decision on the appropriate box.

- ☐ **Approved** — All changes apply.
- ☒ **Approved in Part** — Specify below which changes **do not** apply.
- ☐ **Denied** — State the reasons for denial below.

Comments: On page 1 of 5 of the Certificate of Correction, the change to col. 5, line 23 deleting "aperture 354" does not apply since it would result in reference character "354" in Fig. 4 without a reference in the specification. Col. 5, line 23 should be corrected as follows: after "aperture 354" insert --in--.

Victor K. Hwang
Patent Examiner

Acting SPE 1/22/07

3764
Art Unit

PTOL-306 (REV. 7/03)

U.S. DEPARTMENT OF COMMERCE Patent and Trademark Office

UNITED STATES PATENT AND TRADEMARK OFFICE

COMMISSIONER FOR PATENTS
UNITED STATES PATENT AND TRADEMARK OFFICE
P.O. BOX 1450
ALEXANDRIA, VA 22313-1450
www.uspto.gov

CANTOR COLBURN, LLP
20 CHURCH STREET
22ND FLOOR
HARTFORD, CT 06103

COPY MAILED

JUL 03 2008

OFFICE OF PETITIONS

ON PETITION

In re Application of :
Joo Sun Yoon, et al. :
Application No.: 10/612,649 :
Filed: July 2, 2003 :
Attorney Docket No.: 21C-0058 :

This is a decision on the petition, filed July 3, 2008, under 37 CFR 1.313(c)(2) to withdraw the above-identified application from issue after payment of the issue fee.

The petition is **GRANTED**.

The above-identified application is withdrawn from issue for consideration of a submission under 37 CFR 1.114 (request for continued examination). See 37 CFR 1.313(c)(2).

Petitioner is advised that the issue fee paid on June 4, 2008, cannot be refunded. If, however, this application is again allowed, petitioner may request that it be applied towards the issue fee required by the new Notice of Allowance.[1]

Telephone inquiries relating to this decision should be directed to the undersigned at (571) 272-3204.

The application is being referred to Technology Center AU 2871 for further processing of the request for continued examination under 37 CFR 1.114 and for consideration of the concurrently filed Information Disclosure Statement (IDS).

Sherry D. Brinkley
Petitions Examiner
Office of Petitions

[1] *The request to apply the issue fee to the new Notice may be satisfied by completing and returning the new Part B - Fee(s) Transmittal Form (along with any balance due at the time of submission). Petitioner is advised that the Issue Fee Transmittal Form must be completed and timely submitted to avoid abandonment of the application.*

UNITED STATES PATENT AND TRADEMARK OFFICE

COMMISSIONER FOR PATENTS
UNITED STATES PATENT AND TRADEMARK OFFICE
P.O. BOX 1450
ALEXANDRIA, VA 22313-1450
www.uspto.gov

Paper No.

MARSHALL, GERSTEIN & BORUN LLP
233 S. WACKER DRIVE, SUITE 6300
SEARS TOWER
CHICAGO IL 60606

COPY MAILED

JUN 30 2006

OFFICE OF PETITIONS

In re Application of	:	
Patrick Droppleman	:	DECISION ON PETITION
Application No. 10/612,652	:	
Filed: July 2, 2003	:	
Atty Docket No. 30552/38911A	:	

This is a decision on the "REQUEST FOR REMAILING OF NOTICE OF ALLOWANCE AND PETITION TO WITHDRAW HOLDING OF ABANDONMENT UNDER 37 C.F.R. § 1.181," filed September 14, 2005.

The above-identified application became abandoned for failure to timely pay the required issue fee (and publication fee) within the statutory period of three (3) months from the mailing date, February 9, 2005, of the Notice of Allowance and Fee(s) Due. No extensions of time are permitted for transmitting issue fees (or publication fees). Accordingly, the above-identified application became abandoned on May 10, 2005. A courtesy Notice of Abandonment was mailed on August 23, 2005.

The showing required to establish non-receipt of an Office communication must include a statement from the practitioner stating that the Office communication was not received by the practitioner and attesting to the fact that a search of the file jacket and docket records indicates that the Office communication was not received. In addition, a copy of the docket record where the non-received Office communication would have been entered had it been received and docketed must be attached to and referenced in practitioner's statement.

The instant petition was promptly filed. Petitioner asserts that the Notice of Allowance was never received at the Marshall, Gerstein and Borun law firm (whose address was at the time of mailing of the Notice, and continues to be, the correspondence address of record). The petition includes copies of the law firm's logs, application file jacket, docket records for the entire firm from February 2005 through May 2005 and electronic database docketing record for this application, showing where the Notice would have been entered had it been received; and a statement of attorney of record Richard Anderson, attesting on a personal knowledge basis that the Notice was never received. (It is noted that the correspondence address on the Notice contains an error, inasmuch as, it is addressed to 6300 Sears Tower and not Suite 6300).

In view thereof, the Notice of Abandonment mailed August 23, 2005 is hereby **vacated**, and the holding of abandonment is **withdrawn**. A new Notice of Allowance and Fee(s) Due will be mailed and the period for reply will be re-started.

The petition under § 1.181 is **GRANTED**.

No fee is required on petition under § 1.181.

Technology Center AU 2818 has been advised of this decision. The application file is, thereby, forwarded to the Technology Center's technical support staff for mailing of a new Notice of Allowance and Fee(s) Due and for re-mailing of the Notice of Allowability. The three (3) month nonextendable time period for responding to the Notices, including paying the Issue Fee, will be set to run from the mailing date of the new Notices.

Telephone inquiries specific to this matter should be directed to the undersigned at (571) 272-3219.

Nancy Johnson

Nancy Johnson
Senior Petitions Attorney
Office of Petitions

UNITED STATES PATENT AND TRADEMARK OFFICE

Commissioner for Patents
United States Patent and Trademark Office
P.O. Box 1450
Alexandria, VA 22313-1450
www.uspto.gov

Kris T. Fredrick
HONEYWELL INTERNATIONAL INC.
101 COLUMBIA ROAD
P O BOX 2245
MORRISTOWN NJ 07962-2245

COPY MAILED

AUG 2 2 2005

OFFICE OF PETITIONS

In re Application of
SCHWICHTENBERG et al.
Application No. 10/612,664
Filed: July 2, 2003
Attorney Docket No. H26922 US

DECISION
ON PETITION

This is a decision on the petition under 37 CFR 1.137(b), filed July 22, 2005, to revive the above-identified application.

The petition is **GRANTED**.

The application became abandoned for failure submit the issue fee and publication fee in a timely manner in reply to the Notice of Allowance and Fee(s) Due, mailed March 17, 2005, which set a statutory period for reply of three (3) months. Accordingly, the application became abandoned on June 18, 2005.

The petition satisfies the conditions for revival pursuant to the provisions of 37 CFR 1.137(b) in that (1) the reply in the form of the issue fee and the publication fee; (2) the petition fee of $1500; and (3) the required statement of unintentional delay have been received. Accordingly, the issue fee payment and the publication fee payment are accepted as having been unintentionally delayed.

Telephone inquiries concerning this decision should be directed to Denise Pothier at (571) 272-4787.

The application matter is referred to the Office of Patent Publication.

Frances Hicks
Petitions Examiner
Office of Petitions

UNITED STATES PATENT AND TRADEMARK OFFICE

Commissioner for Patents
United States Patent and Trademark Office
P.O. Box 1450
Alexandria, VA 22313-1450
www.uspto.gov

MAR 16 2005

MAILED

MAR 16 2005
OFFICE OF THE DIRECTOR
TC 3600

Kathryn Holtzworth
43 Inspirational Drive
Sedona, AZ 86336

In re Application of
Kathryn Ann Holtzworth, et al.
Application No. 10/612,696
Filed: July 2, 2003
For: PETBIB SMALL ANIMAL SHOULDER CARRIER AND TOY

DECISION ON PETITION TO WITHDRAW THE HOLDING OF ABANDONMENT

This is in reply applicants' Petition to Withdraw the Holding of Abandonment under 37 CFR 1.181 filed in the United States Patent and Trademark Office on October 21, 2004.

The petition is **DISMISSED**.

A review of the file record indicates that the application was held abandoned for failure to timely file a proper response to the Office action dated December 11, 2003 and a Notice to that effect was mailed on September 21, 2004.

Petitioner states that a response was filed on May 10, 2004 by mail. The copy of the response submitted with the petition includes a Certificate of mailing dated May 10, 2004.

Review of the file reveals that applicant did provide a submission in response to the December 11, 2003 Office action dated May 10, 2004. However, only the transmittal form and petition extention form are present. The amendment associated with the transmittal form is missing.

A comparison of the May 10, 2004 transmittal form and the submitted copy (dated October 21, 2004) of the May 10, 2004 transmittal form do not coincide. That is the copy provided October 21, 2004 does not appear to be a true copy. Please note the name and signatures on the May 10, 2004 and the October 21, 2004 do not match on the transmittal form. Accordingly, the submitted evidence of filing in May 10, 2004 is insufficient, as it does not appear to be a true original copy.

Any petition to withdraw the holding of abandonment based upon a Certificate of Mailing must include the following requirements:

(1) A copy of the original response bearing a signed Certificate of Mailing which includes the date of signing; and

(2) A statement under 37 CFR 1.8(b)(3) attesting to the personal knowledge of mailing the *original* response on the date indicated on the Certificate of Mailing (see 37 CFR 1.8 and MPEP 512).

The above petition fails to meet requirements (1) and (2). (1) A copy of the original response bearing a signed Certificate of Mailing which includes the date of signing and (2) a statement under 37 CFR 1.8(b)(3) attesting to the personal knowledge of sending the *original* response by mail on the date indicated on the certificate, by the person who signed the certificate.

Any request for reconsideration of this decision must be submitted within TWO (2) MONTHS from the mail date of this decision. Extensions of time under 37 CFR 1.136(b) are permitted. The reconsideration request should include a cover letter entitled "Renewed Petition to Withdraw the Holding of Abandonment Under 37 CFR 1.81."

Steven N. Meyers
Special Programs Examiner
Patent Technology Center 3600
(703) 308-3868

SNM/jwk: 3/2/05

UNITED STATES PATENT AND TRADEMARK OFFICE

Commissioner for Patents
United States Patent and Trademark Office
P.O. Box 1450
Alexandria, VA 22313-1450
www.uspto.gov

MAILED
FROM DIRECTORS OFFICE

OCT 13 2005

TECHNOLOGY CENTER 3600

Kathryn Holtzworth
43 Inspirational Drive
Sedona, AZ 86336

In re Application of	:	DECISION ON
Kathryn Ann Holtzworth, et al.	:	RENEWED PETITION
Application No. 10/612,696	:	TO WITHDRAW THE
Filed: July 2, 2003	:	HOLDING OF ABANDONMENT

For: PETBIB SMALL ANIMAL SHOULDER CARRIER AND TOY

This is in reply to applicants' renewed Petition to Withdraw the Holding of Abandonment under 37 CFR 1.181 filed in the United States Patent and Trademark Office on May 12, 2005.

The renewed Petition is **GRANTED**.

A review of the file record indicates that the application was held abandoned for failure to timely file a proper response to the Office action dated December 11, 2003 and a Notice to that effect was mailed on September 21, 2004.

Petitioner states that a response was filed on May 10, 2004 by mail. The copy of the response submitted with the petition includes a Certificate of mailing dated May 10, 2004.

Review of the file reveals that applicant did provide a submission in response to the December 11, 2003 Office action dated May 10, 2004. However, only the transmittal form and petition extension form are present. The amendment associated with the transmittal form was missing.

Further review of the file has revealed that the original amendment including the transmittal form, the extension of time, remarks and amendments have been located and are now in the file. These papers include a two month extension of time (including the required fee) and a certificate of mailing dated May 10, 2004, which is timely.

Applicants' petition to withdraw the abandonment is **GRANTED.**

The application is being forwarded to the Supervisory Legal Instruments Examiner with instructions to enter the correct amendment of May 10, 2004, withdraw the holding of abandonment, and return the application to pending status so that it may be forwarded to the examiner of record for an action on the merits.

Kenneth J. Dorner
Special Programs Examiner
Patent Technology Center 3600
(571) 272-6587

KJD/js: 09/27/05

UNITED STATES PATENT AND TRADEMARK OFFICE

Commissioner for Patents
United States Patent and Trademark Office
P.O. Box 1450
Alexandria, VA 22313-1450
www.uspto.gov

UNITY SEMICONDUCTOR CORPORATION
250 NORTH WOLFE ROAD
SUNNYVALE CA 94085

COPY MAILED

JAN 30 2006

OFFICE OF PETITIONS

In re Application of	:	
Rinerson et al.	:	
Application No. 10/612,733	:	ON PETITION
Filed: July 1, 2003	:	
Attorney Docket No. P015.03.ABC	:	

This is a decision on the petition under 37 C.F.R. § 1.137(b), filed January 13, 2006, to revive the above-identified application.

The petition is **GRANTED.**

The petition satisfies the conditions for revival pursuant to the provisions of 37 CFR 1.137(b) in that (1) the reply in the form of the Issue Fee Transmittal (with requisite fees) and an Amendment after Allowance; (2) the petition fee; and (3) the required statement of unintentional delay have been received. Accordingly, the response has been accepted as having been unintentionally delayed.

This matter is being referred to Technology Center 2800 for processing of the amendment and petition to correct inventorship submitted concurrently herewith.

Telephone inquiries regarding this decision should be directed to the undersigned at (571) 272-3282.

Liana Chase
Petitions Examiner
Office of Petitions

UNITED STATES PATENT AND TRADEMARK OFFICE

Commissioner for Patents
United States Patent and Trademark Office
P.O. Box 1450
Alexandria, VA 22313-1450
www.uspto.gov

UNITY SEMICONDUCTOR CORPORATION
250 NORTH WOLFE ROAD
SUNNYVALE, CA 94085

COPY MAILED

MAR 19 2007

OFFICE OF PETITIONS

In re Application of	:	
Rinerson et al.	:	
Application No. 10/612733	:	DECISION ON APPLICATION
Filed: 07/01/2003	:	FOR PATENT TERM ADJUSTMENT
Patent No. 7,079,442	:	AND
Issued: 07/18/2006	:	NOTICE OF INTENT TO ISSUE
Attorney Docket Number:	:	CERTIFICATE OF CORRECTION
UNTYP015	:	

This is a decision on the "Application for patent Term Adjustment Under 37 CFR § 1.705(d))", filed July 18, 2006. Patentee requests that the revised patent term adjustment indicated on the face of the patent be corrected from two hundred seventy (270) days to three hundred fifteen (315) days.

The application for patent term adjustment is **GRANTED to the extent indicated herein**.

Patentee is given **two (2) months** to respond to this decision. No extensions of time will be granted under 37 C.F.R. § 1.136(a).

The patent term adjustment indicated in the patent is to be corrected by issuance of a certificate of correction showing a revised Patent Term Adjustment of two hundred seventy-one **(271)** days.

On July 18, 2006, the above-identified application matured into U.S. Patent No. 7,079,442. The patent issued with a PTA of two hundred seventy (270) days. The instant request for reconsideration of patent term adjustment was timely filed within two months of the issue date of the patent.

The Office should have determined a patent term adjustment of two hundred seventy-one (271) days based on the following:

Delay	Code Section	Days
PTO:	37 C.F.R. § 1.702(a)(4)	66 (Patent issued after 4 months of issue fee payment)
PTO:	37 C.F.R. § 1.702(a)(1)	366 (Over 14 months to issue first Office action)
Total		**432**

Given the overlapping periods of applicant delay discussed below,

Applicant:	37 C.F.R. § 1.704(c)(3)	41 (payment of issue fee on revival of application)
Applicant:	37 C.F.R. § 1.704(c)(10)	76 (filing of 312 amendment after allowance)
Applicant:	37 C.F.R. § 1.704(c)(10)	44 (filing 1.48 request/declaration after allowance)
Total		**162**

The present petition

Patentee notes that an Amendment under 37 CFR 312 including a supplemental declaration and correction of inventorship under 37 CFR 1.48 were filed January 13, 2006, and notes that a response to the amendment was mailed 76 days later, on March 29, 2006. As such, Patentee does not dispute the adjustment of 76 days. (Emphasis supplied).

Patentee asserts that the period of Applicant delay for failure to timely pay the issue fee should run from December 3, 2005 (the day the application became abandoned) to January 30, 2006 (the date the petition to revive the application for failure to timely pay the issue fee was granted), or 59 days, and that this period overlaps the above reduction (beginning January 13, 2006 with the filing of the amendment), and ending January 30, 2006 (with the granting of the petition to revive). As such, Patentee asserts, the total period of adjustment should be calculated from December 3, 2005 to January 12, 2006, which is 41 days.

> 37 CFR § 1.704(c)(3) provides that:
>
> Abandonment of the application or late payment of the issue fee, in which case the period of adjustment set forth in §1.703 shall be reduced by the number of days, if any, beginning on the date of abandonment or the date after the date the issue fee was due and ending on the earlier of:
>
> (i) The date of mailing of the decision reviving the application or accepting late payment of the issue fee; or
>
> (ii) The date that is four months after the date the grantable petition to revive the application or accept late payment of the issue fee was filed; (Emphasis supplied)

Patentee is correct that the period of reduction under 37 CFR 1.704(c)(3), considering the overlap with the period of reduction under 1.704(c)(10), is 41 days not 42 days. The Office should not have calculated this period of reduction as 42 days under 37 CFR 1.704(b). This period of reduction has been corrected from 42 days to 41 days.

However, with respect to calculation of the reduction under 1.704(c)(10), patentee is incorrect.

> 37 CFR § 1.704(c)(10) provides that:

Submission of an amendment under § 1.312 or other paper after a notice of allowance has been given or mailed, in which case the period of adjustment set forth in § 1.703 shall be reduced by the lesser of:

(i) The number of days, if any, beginning on the date the amendment under § 1.312 or other paper was filed and ending on the mailing date of the Office action or notice in response to the amendment under § 1.312 or such other paper;

or

(ii) Four months;

Patentee filed an amendment on January 13, 2006, which the Examiner responded to on March 29, 2006. As such, the Applicant delay was 76 days for filing the 312 amendment. Patentee also filed a request under 37 CFR 1.48 and Supplemental oath/declaration on January 13, 2006, which was not responded to by the Examiner. As such, the Applicant delay was four months (120 days) for filing the request under 37 CFR 1.48 and Supplemental oath/declaration, which, removing overlap, was reduced to 44 days.

The period of reduction for Applicant's delay is correctly calculated as 41+76+44 days, or one hundred sixty-one (161) days.

In view thereof, it is concluded that the patent should have issued with a revised Patent Term Adjustment of two hundred seventy-one (271) days (432 days of Office delay reduced by 161 days of applicant delay).

Receipt is acknowledged of the $200.00 fee set forth in 37 CFR 1.18(e). No additional fees are required.

The application file is being forwarded to the Certificates of Correction Branch for issuance of a certificate of correction in order to rectify this error. The Office will issue a certificate of correction indicating that the term of the above-identified patent is extended or adjusted by two hundred seventy-one **(271)** days.

Telephone inquiries specific to this matter should be directed to Attorney Derek L. Woods at (571) 272-3232.

Nancy Johnson

Nancy Johnson
Senior Petitions Attorney
Office of Petitions

UNITED STATES PATENT AND TRADEMARK OFFICE

CERTIFICATE OF CORRECTION

PATENT : 7,079,442 B2

DATED : July 18, 2006

INVENTOR(S) : Rinerson et al.

DRAFT

It is certified that error appears in the above-identified patent and that said Letters Patent is hereby corrected as shown below:

On the cover page,

[*] Notice: Subject to any disclaimer, the term of this patent is extended or adjusted under 35 USC 154(b) by (270) days

Delete the phrase "by 270 days" and insert – by 271 days--

UNITED STATES PATENT AND TRADEMARK OFFICE

Commissioner for Patents
United States Patent and Trademark Office
P.O. Box 1450
Alexandria, VA 22313-1450
www.uspto.gov

UNITY SEMICONDUCTOR CORPORATION
250 NORTH WOLFE ROAD
SUNNYVALE, CA 94085

COPY MAILED

JAN 07 2008

OFFICE OF PETITIONS

In re Application of	:	
Rinerson et al.	:	
Application No. 10/612733	:	DECISION ON APPLICATION
Filed: 07/01/2003	:	FOR PATENT TERM ADJUSTMENT
Patent No. 7,079,442	:	AND
Issued: 07/18/2006	:	NOTICE OF INTENT TO ISSUE
Attorney Docket Number: UNTYP015	:	CERTIFICATE OF CORRECTION

This is a decision on the "Request for Reconsideration of Decision on an Application for Patent Term Adjustment Under 37 CFR § 1.705(d)", filed May 14, 2007. Patentee request that the revised patent term adjustment indicated on the face of the patent be corrected from two hundred seventy-one (271) days to three hundred fifteen (315) days.

The request for reconsideration of decision on application for patent term adjustment ("PTA") under 37 CFR 1.705(d) is hereby **GRANTED.**

The patent term adjustment indicated in the patent is to be corrected by issuance of a certificate of correction showing a revised Patent Term Adjustment of three hundred fifteen **(315)** days.

On July 18, 2006, the above-identified application matured into U.S. Patent No. 7,079,442. The patent issued with a PTA of two hundred seventy (270) days. Patentee filed an Application for Patent Term Adjustment Under 37 CFR § 1.705(d) on July 18, 2006, requesting reconsideration of the Patent Term Adjustment. By decision mailed March 19, 2007, the Application for Patent Term Adjustment was granted to the extent that the revised patent term adjustment was corrected to two hundred seventy-one (271) days. In association with the filing of an amendment on January 13, 2006, and a request under 37 CFR 1.48 and supplemental oath or declaration on January 13, 2006, pursuant to 37 CFR 1.704(c)(10), periods of reduction of 76 days and 44 days respectively were entered. The Office did not agree with Patentee' contention that the Office action mailed March 29, 2006 responded to both papers and thus, only a period of reduction of 76 days should have been entered. Thus, the period of reduction of 44 days was not removed.

The period of reduction of 44 days is at issue on instant request for reconsideration. Patentee's arguments have been reconsidered and it is determined that removal of the 44 day period of reduction is warranted. In this instance, it is proper to use the date of mailing of the Office

action of March 29, 2006 as the date the Office took action in response to both the amendment and the request under 37 CFR 1.48. Patentee is correct that the examiner would have taken action in response to both requests in that Office action.

The period of reduction for Applicant's delay is correctly calculated as 41+76 days, or one hundred seventeen (117) days.

In view thereof, it is concluded that the patent should have issued with a revised Patent Term Adjustment of three hundred fifteen (315) days (432 days of Office delay reduced by 117 days of applicant delay).

Receipt is acknowledged of the $200.00 fee set forth in 37 CFR 1.18(e) on July 18, 2006. No additional fees are required.

It is noted that a review of the front page of the issued patent reveals that inventor Steve Kuo-Ren Hsia is listed thereon, and has not been removed, contrary to Patentee's assertion. Patentee may wish to file a petition under 37 CFR 1.324 to correct inventorship in an issued patent.

The application file is being forwarded to the Certificates of Correction Branch for issuance of a certificate of correction in order to rectify this error. The Office will issue a certificate of correction indicating that the term of the above-identified patent is extended or adjusted by three hundred fifteen (**315**) days.

Telephone inquiries specific to this matter should be directed to Attorney Derek L. Woods at (571) 272-3232.

Nancy Johnson

Nancy Johnson
Senior Petitions Attorney
Office of Petitions

Encl.: Copy of DRAFT Certificate of Correction

UNITED STATES PATENT AND TRADEMARK OFFICE

CERTIFICATE OF CORRECTION

PATENT : 7,079,442 B2

DATED : July 18, 2006

INVENTOR(S) : Rinerson et al.

DRAFT

It is certified that error appears in the above-identified patent and that said Letters Patent is hereby corrected as shown below:

On the cover page,

[*] Notice: Subject to any disclaimer, the term of this patent is extended or adjusted under 35 USC 154(b) by (271) days.

Delete the phrase "by 271 days" and insert – by 315 days--

UNITED STATES PATENT AND TRADEMARK OFFICE

UNITED STATES DEPARTMENT OF COMMERCE
United States Patent and Trademark Office
Address: COMMISSIONER FOR PATENTS
P.O. Box 1450
Alexandria, Virginia 22313-1450
www.uspto.gov

PACESETTER, INC.
15900 VALLEY VIEW COURT
SYLMAR, CA 91392-9221

Mail Date: 04/21/2010

Applicant	: James E. Brewer	: DECISION ON REQUEST FOR
Patent Number	: 7613513	: RECALCULATION of PATENT
Issue Date	: 11/03/2009	: TERM ADJUSTMENT IN VIEW
Appliction No	: 10/612,770	: OF WYETH AND NOTICE OF INTENT TO
Filed	: 07/01/2003	: ISSUE CERTIFICATE OF CORRECTION
		:

The Request for Recalculation is **GRANTED** to the extent indicated.

The patent term adjustment has been determined to be **1298** days. The USPTO will *sua sponte* issue a certificate of correction reflecting the amount of PTA days determined by the recalculation.

Prior to the issuance of the certificate of correction, the USPTO will afford patentee an opportunity to be heard and request reconsideration. Accordingly, patentee has **one month or thirty (30) days**, whichever is longer, to file a request for reconsideration of this patent term adjustment calculation. See 35 U.S.C. 154(b)(3)(B)(ii) and 37 CFR 1.322(a)(4). No extensions of time will be granted under 37 CFR 1.136.

Patentee should use document code PET.OP if electronically filing a request for reconsideration of this patent term adjustment calculation. The patentee must also include the information required by 37 CFR 1.705(b)(2) and the fee required by 37 CFR 1.18(e). If patentee does not file a timely request for reconsideration of this patent term adjustment calculation including the information required by 37 CFR 1.705(b)(2) and the fee required by 37 CFR 1.18(e), the USPTO will issue a certificate of correction reflecting the PTA determination noted above.

Patentee should be aware that in order to preserve the right to review in the United States District Court for the District of Columbia of the USPTO patent term adjustment determination, patentee must ensure that he or she also take the steps required under 35 U.S.C. 154(b)(4)(A) in a timely manner. Nothing in the request for recalculation should be construed as providing an alternative time frame for commencing a civil action under 35 U.S.C. 154(b)(4)(A).

Any questions concerning this decision should be directed to the Office of Patent Legal Administration at 571-272-7702.

UNITED STATES PATENT AND TRADEMARK OFFICE

Commissioner for Patents
United States Patent and Trademark Office
P.O. Box 1450
Alexandria, VA 22313-1450
www.uspto.gov
DIW Jan-06

UNITY SEMICONDUCTOR CORPORATION
250 NORTH WOLFE ROAD
SUNNYVALE CA 94085

COPY MAILED
JAN 09 2006
OFFICE OF PETITIONS

In re Application of	:	
Rinerson et al.	:	
Application No. 10/612,776	:	DECISION ON PETITION
Filed: 1 July, 2003	:	
Atty Docket No. UNTYP018	:	

This is a decision on the petition filed on 1 September, 2005, under 37 CFR 1.137(b),[1] to revive the above-identified application.

The petition is **GRANTED**.

The application became abandoned on 20 August, 2005, for failure to timely submit the issue and publication fees in response to the Notice of Allowance and Fee(s) Due mailed on 19 May, 2005, which set a three (3) month statutory period for reply. The filing of the present petition precedes the mailing of Notice of Abandonment.

Receipt of the petition under 37 CFR 1.48(a) is acknowledged. The application is being referred to the Primary Examiner for

---

[1] Effective December 1, 1997, the provisions of 37 CFR 1.137(b) now provide that where the delay in reply was unintentional, a petition may be filed to revive an abandoned application or a lapsed patent pursuant to 37 CFR 1.137(b). A grantable petition filed under the provisions of 37 CFR 1.137(b) must be accompanied by:

(1) the required reply, unless previously filed. In a nonprovisional application abandoned for failure to prosecute, the required reply may be met by the filing of a continuing application. In a nonprovisional utility or plant application filed on or after June 8, 1995, and abandoned for failure to prosecute, the required reply may also be met by the filing of a request for continuing examination in compliance with § 1.114. In an application or patent, abandoned or lapsed for failure to pay the issue fee or any portion thereof, the required reply must be the payment of the issue fee or any outstanding balance thereof. In an application, abandoned for failure to pay the publication fee, the required reply must include payment of the publication fee.

(2) the petition fee as set forth in 37 CFR 1.17(m);

(3) a statement that the entire delay in filing the required reply from the due date for the reply until the filing of a grantable petition pursuant to 37 CFR 1.137(b) was unintentional. The Commissioner may required additional information where there is a question whether the delay was unintentional; and

(4) any terminal disclaimer (and fee as set forth in 37 CFR 1.20(d)) required pursuant to 37 CFR 1.137(c)).

consideration of this petition in accordance with MPEP 1002.02(e).

This application is being referred to Technology Center Art Unit 2824 for further processing.

Telephone inquiries concerning this matter may be directed to the undersigned at (571) 272-3231.

Douglas I. Wood
Senior Petitions Attorney
Office of Petitions

UNITED STATES PATENT AND TRADEMARK OFFICE

Commissioner for Patents
United States Patent and Trademark Office
P.O. Box 1450
Alexandria, VA 22313-1450
www.uspto.gov

MONSANTO COMPANY
800 N. LINDBERGH BLVD.
ATTENTION: GAIL P. WUELLNER, IP PARALEGAL, (E2NA)
ST. LOUIS MO 63167

COPY MAILED

JUN 18 2008

OFFICE OF PETITIONS

In re Application of	: DECISION DISMISSING PETITIONS
La Rosa et al.	: UNDER 37 CFR 1.78(a)(3) and (a)(6)
Application No. 10/612783	: AND
Filed: 07/02/2003	: DECISION ON REQUEST
Attorney Docket No. 38-21(53373)A	: UNDER 37 CFR 1.48(a)

This is a decision on the "PETITION TO AMENDMENT PRIORITY UNDER 37 C.F.R. § 1.78(a)(3)," filed on April 24, 2008, which is treated as a petition under 37 CFR §§ 1.78(a)(3) and 1.78(a)(6) to accept an unintentionally delayed claim under 35 U.S.C. §§ 120 and 119(e) for the benefit of priority to the prior-filed nonprovisional and provisional applications set forth in the concurrently filed amendment. This is also a decision on the request to correct inventorship under 37 CFR § 1.48(a), concurrently filed on April 24, 2008.

The petitions are **DISMISSED.**

A petition for acceptance of a claim for late priority under 37 CFR §§ 1.78(a)(3) and 1.78(a)(6) is only applicable to those applications filed on or after November 29, 2000 and after the expiration of the period specified in 37 CFR §§ 1.78(a)(2)(ii) and 1.78(a)(5)(ii). In addition, the petition under 37 CFR §§ 1.78(a)(3) and 1.78(a)(6) must be accompanied by:

(1) the reference required by 35 U.S.C. §§ 120 and 119(e) and 37 CFR §§ 1.78(a)(2)(i) and 1.78(a)(5)(i) of the prior-filed application, unless previously submitted;
(2) the surcharge set forth in § 1.17(t); and
(3) a statement that the entire delay between the date the claim was due under 37 CFR §§ 1.78(a)(2)(ii) and 1.78(a)(5)(ii) and the date the claim was filed was unintentional. The Director may require additional where there is a question whether the delay was unintentional.

The petition does not comply with item (1).

Petitioner has submitted an amendment and an Application Data Sheet containing claims of benefit under 37 CFR 1.78(a)(3) and (a)(6) to the prior-filed nonprovisional and provisional applications.

At the outset, a review of Office computer database records indicates that there is a lack of common inventorship between the instant nonprovisional application and some of the nonprovisional and provisional applications noted in the amendment and ADS submitted concurrently with the instant petition. The statute requires that the applications claiming benefit of the earlier filing date under 35 U.S.C. §119(e) or 120 be filed by an inventor or inventors named in the prior-filed nonprovisional or provisional application.

While petitioners have submitted a request to correct the inventorship under 37 CFR 1.48(a) to add the inventors of the prior-filed applications, the request under 37 CFR 1.48(a) is not grantable for the reasons stated below. Accordingly, a decision on the petition under 37 CFR 1.78(a)(3) and (a)(6) will be held in abeyance pending submission of a grantable request under 37 CFR 1.48(a).

Furthermore, where an application claims a benefit under 35 U.S.C. 120 of a chain of applications, the application must make a reference to the first (earliest) application and every intermediate application. See Sampson v. Ampex Corp., 463 F.2d 1042, 1044-45, 174 USPQ 417, 418-19 (2d Cir. 1972); Sticker Indus. Supply Corp. v. Blaw-Knox Co., 405 F.2d 90, 93, 160 USPQ 177, 179 (7th Cir. 1968); Hovlid v. Asari, 305 F.2d 747, 751, 134 USPQ 162, 165 (9th Cir. 1962). See also MPEP 201.11. In addition, every intermediate application must also make a reference to the first (earliest) application and every application after the first application and before such intermediate application. MPEP 201.06(d).

Petitioners should review the claim for priority to ensure that a reference is made to the first application and to every intermediate application. In this regard, a review of Office records reveals that prior-filed Application No. 09/816,660, filed on March 26, 2001, and now abandoned, does not contain a claim for the benefit of prior-filed Application No. 09/733,089. Accordingly, a petition under 37 CFR 1.78(a)(3) would be required to be filed in Application No. 09/816,660 to add the benefit claim to prior-filed Application No. 09/733,089.

For those applications filed prior to November 29, 2000, no petition under 37 CFR 1.78 is required to be filed to add the benefit claim. However, the benefit claim must be corrected by way of an amendment and, if the application in which the benefit claim is filed is currently abandoned, a petition under 37 CFR 1.182 requesting entry of the amendment, accompanied by the required petition fee. In this regard, 35 U.S.C. § 120 permits entry of a subsequent amendment to an abandoned application in applications filed prior to November 29, 2000 to include the benefit of an earlier filing date for purposes other than prosecution. *See* Sampson v. Commissioner of Patents and Trademarks, 195 USPQ 136 (DC DC 1976).

Further in this regard, Application No. 09/333,535, filed on June 14, 1999, and now abandoned, does not contain a claim for the benefit of prior-filed Application No. 60/089,524, and

Application No. 09/615,606, filed on July 13, 2000, and now abandoned, does not contain a claim for the benefit of prior-filed Application No. 60/144,084. Likewise, Application No. 09/565,306, filed on May 4, 2000, and now abandoned, does not contain a claim for the benefit of prior-filed Application No. 60/132,860. Application No. 09/552,086, filed on April 19, 2000, and now abandoned, does not contain a claim for the benefit of prior-filed Application Nos. 60/130,464, 60/141,132, 60/141,139, 60/141,135, or 60/130,174. Application No. 09/531,113, filed on March 22, 2000, and currently pending, does not contain a claim for the benefit of prior filed Application Nos. 60/125,818, 60/125,817, 60/141,132, 60/141,139, 60/141,135, or 60/130,174. Lastly, Application No. 09/663,423, filed on September 15, 2000, and now abandoned, does not contain a claim for the benefit of prior-filed Application No. 60/154,375.

Upon the granting of a petition under 37 CFR 1.78 in Application No. 09/816,660, filed on March 26, 2001, to add the claim of benefit to the prior-filed application, and the filing of an amendment in each of the above-identified applications filed prior to November 29, 2000 for which a claim of benefit is required addressing the above matters, accompanied by a petition under 37 CFR 1.182 and the required fee if the application in which the benefit claim is being made is currently abandoned, petitioners may file a renewed petition in the subject application. A copy of the grant of the petition under 37 CFR 1.78 in prior-filed application No. 09/816,660, and a copy of the amendments, and grant of the petition under 37 CFR 1.182, if required, in those applications filed prior to November 29, 2000, should accompany the renewed petition.

Lastly, the amendment with the subject petition to add the claims of benefit is not acceptable as drafted since it improperly incorporates by reference the prior-filed applications. An incorporation by reference statement added after an application's filing date is not effective because no new matter can be added to an application after its filing date (*see* 35 U.S.C. § 132(a)). If an incorporation by reference statement is included in an amendment to the specification to add a benefit claim under 35 U.S.C. § 120 after the filing date of the application, the amendment would not be proper. When a benefit claim under 35 U.S.C. § 120 is submitted after the filing of an application, the reference to the prior application cannot include an incorporation by reference statement of the prior application. *See* Dart Industries v. Banner, 636 F.2d 684, 207 USPQ 273 (C.A.D.C. 1980). *Note* MPEP §§ 201.06(c) and 608.04(b).

REQUEST UNDER 37 CFR 1.48(a)

37 CFR 1.48(a) states that if the inventive entity is set forth in error in an executed § 1.63 oath or declaration in a nonprovisional application, and such error arose without any deceptive intention on the part of the person named as an inventor in error or on the part of the person who through error was not named as an inventor, the inventorship of the nonprovisional application may be amended to name only the actual inventor or inventors.

Amendment of the inventorship requires:

(1) A request to correct the inventorship that sets forth the desired inventorship change;

(2) A statement from each person being added as an inventor and from each person being deleted as an inventor that the error in inventorship occurred without deceptive intention on his or her part;

(3) An oath or declaration by the actual inventor or inventors as required by § 1.63 or as permitted by §§ 1.42, 1.43 or § 1.47;

(4) The processing fee set forth in § 1.17(i); and

(5) If an assignment has been executed by any of the original named inventors, the written consent of the assignee (see § 3.73(b) of this chapter).

The request lacks items (2), (3), and (5).

With regard to item (2), no statement the error in inventorship occurred without deceptive intention on his or her part has been filed for proposed inventor Thomas G. Ruff.

With regard to item (3), the oath or declaration contains unsigned/undated alterations for proposed inventors Mark S. Abad, Dane K. Fisher, and Donald E. Nelson. 37 CFR 1.52(c) requires any interlineation, erasure, cancellation or other alteration of the application papers filed must be made before the signing of any accompanying oath or declaration pursuant to § 1.63 referring to those application papers and should be dated and initialed or signed by the applicant on the same sheet of paper. Further review of the declaration reveals that there also appear to be alterations for proposed inventor Raghunath V. Lalgudi in that the mailing address appears to contain a strikeout with no correction; and for proposed inventor Michael D. Thompson in that the residence city and state appears to contain a strikeout with no correction.

A new oath or declaration in compliance with 37 CFR 1.63 and 1.67, listing the residence, mailing address, and citizenship of all of the inventors and signed by the inventor to whom the corrections pertain (*i.e.,* proposed joint inventors Abad, Fisher, Lalgudi, Nelson, and Thompson) must be provided with any renewed petition.

With regard to item (4), it is unclear from the papers filed with the petition whether an assignment has been executed by any of the original named inventors. Petitioners should state whether or not any of the original named inventors have executed an assignment. If an assignment has been so executed, written consent of the assignee must be provided with any renewed petition.

Further correspondence with respect to this matter should be addressed as follows:

By mail: Mail Stop PETITIONS
Commissioner for Patents
Post Office Box 1450
Alexandria, VA 22313-1450

By hand: Customer Service Window
Mail Stop Petitions
Randolph Building
401 Dulany Street
Alexandria, VA 22314

By fax: (571) 273-8300
ATTN: Office of Petitions

Any questions concerning this matter may be directed to Senior Petitions Attorney Douglas I. Wood at (571) 272-3231 .

Anthony Knight
Supervisor
Office of Petitions

UNITED STATES PATENT AND TRADEMARK OFFICE

COMMISSIONER FOR PATENTS
UNITED STATES PATENT AND TRADEMARK OFFICE
P.O. BOX 1450
ALEXANDRIA, VA 22313-1450
www.uspto.gov

PHILIP S. JOHNSON
JOHNSON & JOHNSON
ONE JOHNSON & JOHNSON PLAZA
NEW BRUNSWICK, NJ 08933-7003

COPY MAILED

JUL 07 2006

OFFICE OF PETITIONS

In re Application of :
Randy R. Stephens, et. al. :
Application No. 10/612,785 :
Filed: July 2, 2003 :
Attorney Docket No. END 727 DIV1/GSG :

ON PETITION

This is a decision on the petition under 37 CFR 1.137(b), filed by facsimile transmission on May 25, 2006, to revive the above-identified application.

The application became abandoned for failure to timely respond to the Notice of Allowance and Fee(s) Due mailed December 30, 2005. A Notice of Abandonment was mailed on May 11, 2006.

The petition satisfies the requirements of 37 CFR 1.137(b) in that petitioner has supplied (1) the reply in the form of $1,400 for payment of the issue fee and $300 for payment of the publication fee; (2) the petition fee of $1,500; and (3) an adequate statement of unintentional delay. Therefore, the petition is **GRANTED**.

This application file is being referred to the Office of Publications to be processed into a patent.

Telephone inquiries concerning this decision should be directed to the undersigned at (571) 272-3226.

Andrea Smith
Petitions Examiner
Office of Petitions

UNITED STATES PATENT AND TRADEMARK OFFICE

Commissioner for Patents
United States Patent and Trademark Office
P.O. Box 1450
Alexandria, VA 22313-1450
www.uspto.gov

Louis P. Herzberg
Intellectual Property Law Dept.
IBM Corporation
P.O. Box 218
Yorktown Heights, NY 10598

COPY MAILED

JUL 3 1 2008

In re Application of	:	
Mari Abe, et. al.	:	
Application No. 10/612,786	:	ON PETITION
Filed: July 2, 2003	:	
Attorney Docket No. JP920020093US1	:	

This is a decision on the petition under 37 CFR 1.137(b), filed June 22, 2007, to revive the above-identified application.

The application became abandoned for failure to respond to the non-final Office action mailed September 20, 2006. A Notice of Abandonment was mailed on April 24, 2007.

There is no indication that the person signing the instant petition was ever given a power of attorney or authorization of agent to prosecute the above-identified application. However, in accordance with 37 CFR 1.34(a), the signature of Ido Tuchman appearing on the petition shall constitute a representation to the United States Patent and Trademark Office that he/she is authorized to represent the particular party in whose behalf he/she acts.

Additionally, it is not apparent whether the statement of unintentional delay was signed by a person who would have been in a position of knowing that the entire delay in filing the required reply from the due date for the reply until the filing of a grantable petition pursuant to 37 CFR 1.137(b) was unintentional. Nevertheless, in accordance with 37 CFR 10.18, the statement is accepted as constituting a certification of unintentional delay. However, in the event that petitioner has no knowledge that the delay was unintentional, petitioner must make such an inquiry to ascertain that, in fact, the delay was unintentional. If petitioner discovers that the delay was intentional, petitioner must so notify the Office.

The petition satisfies the requirements of 37 CFR 1.137(b) in that petitioner has supplied (1) the reply in the form of an amendment; (2) the petition fee of $1,500; and (3) a proper statement of unintentional delay. Therefore, the petition is **GRANTED**.

If petitioner desires to receive future correspondence regarding this application, the appropriate power of attorney or authorization of agent must be submitted. A courtesy copy of this decision is being mailed to petitioner. Nevertheless, all future correspondence regarding this application file will be directed solely to the address of record until otherwise instructed.

This application file is being referred to Technology Center Art Unit 2178 for review of the amendment filed with the instant petition.

Telephone inquiries concerning this decision should be directed to the undersigned at (571) 272-3226.

Andrea Smith
Petitions Examiner
Office of Petitions

cc: Ido Tuchman
Law Office of Ido Tuchman
82-70 Beverly Road
Kew Gardens, NY 11415

UNITED STATES PATENT AND TRADEMARK OFFICE

UNDER SECRETARY OF COMMERCE FOR INTELLECTUAL PROPERTY AND
DIRECTOR OF THE UNITED STATES PATENT AND TRADEMARK OFFICE

DORSEY & WHITNEY, LLP
1420 Fifth Avenue, Suite 3400
Seattle, WA 98101-4010

In re application of:		:
Moehring		:
Serial No.:	10/612,822	:
Filed:	July 01, 2003	:
For:	Doppler ultrasound method and apparatus for monitoring blood flow	:

A Petition Under 37 CFR 1.84(a)(2) and b(2) for Submission of Color Drawings or photographs was submitted in connection with the above-identified application on December 29, 2003. The petition was accompanied by: (1) the requisite three sets of Drawings; (2) the requisite petition fee; and (3) a showing that color drawings are the only practical medium by which to disclose the subject matter sought to be patented in the patent application. Accordingly, the color drawings are acceptable.

The petition is Granted.

Brian L. Casler
Supervisory Patent Examiner
Art Unit 3737

UNITED STATES PATENT AND TRADEMARK OFFICE

COMMISSIONER FOR PATENTS
UNITED STATES PATENT AND TRADEMARK OFFICE
P.O. BOX 1450
ALEXANDRIA, VA 22313-1450
www.uspto.gov

COPY MAILED

JUL 13 2007

OFFICE OF PETITIONS

SEED INTELLECTUAL PROPERTY LAW GROUP PLLC
701 FIFTH AVE
SUITE 5400
SEATTLE, WA 98104

In re Application of	:	
Fabrizio Simone Rovati, et al.	:	
Application No. 10/612,825	:	DECISION GRANTING PETITION
Filed: July 1, 2003	:	UNDER 37 CFR 1.55(c)
Attorney Docket No. 851763.434	:	

This is a decision on the petition under 37 CFR 1.55(c), filed February 28, 2007, to accept an unintentionally delayed claim under 35 U.S.C. § 119(a)-(d) for the benefit of priority to foreign European Application No. 02425437.7, filed July 2, 2002.

The petition is **GRANTED**.

This pending nonprovisional application was filed after November 29, 2000, and did not include a reference to the foreign application, for which benefit is now sought, within the later of four months from the actual filing date of the application or sixteen months from the filing date of the prior foreign application. Since the claim for priority is submitted after the period specified in 37 CFR 1.55(a)(1)(i), this is an appropriate petition under the provisions of 37 CFR 1.55(c).

A petition under 37 CFR 1.55(c) to accept an unintentionally delayed claim for priority requires:

(1) The nonprovisional application claiming the benefit of an earlier filing date must be filed on or after November 29, 2000;

(2) the claim submitted with the petition must identify the prior foreign application for which priority is claimed, as well as any foreign application for the same subject matter and having a filing date before that of the application for which priority is claimed, by the application number, country, and the filing date and be included either in an oath or declaration (37 CFR 1.63(c)(2)) or in an Application Data Sheet (37 CFR 1.76(b)(6);

(3) the surcharge as set forth in 37 CFR 1.17(t);

(4) a statement that the entire delay between the date the claim was due under 37 CFR 1.55(a)(1) and the date the claim was filed was unintentional. (The Director may require additional information where there is a question whether the delay was unintentional.); and

(5) the above-identified nonprovisional application must be filed within 12 months of the filing date of the foreign application.

This application was filed on July 1, 2003, which is after November 29, 2000 and within 12 months of July 2, 2002 (the filing date of the foreign application to which benefit is now being claimed). The required petition fee of $1,370 was received with the petition, as well as an ADS which identifies the foreign application for which priority is claimed by application number, country and filing date. Lastly, petitioner has provided an adequate statement of unintentional delay.

All of the above requirements having been satisfied, the late claim for priority under 35 U.S.C. § 119(a)-(d) is accepted as being unintentionally delayed.

The granting of the petition to accept the delayed benefit claim to the prior-filed application under 37 CFR 1.55(c) should not be construed as meaning that this application is entitled to the benefit of the prior-filed application. In order for this application to be entitled to the benefit of the prior-filed application, all other requirements under 35 U.S.C. § 119(a)-(d) and 37 CFR 1.55(a)(1) must be met. Similarly, the fact that the corrected Filing Receipt accompanying this decision on petition includes the prior-filed application should not be construed as meaning that applicant is entitled to the claim for benefit of priority to the prior-filed application noted thereon. Accordingly, the examiner will, in due course, consider this benefit claim and determine whether this application is entitled to the benefit of the earlier filing date.

A corrected Filing Receipt, which includes the priority claim to the prior-filed foreign application, accompanies this decision on petition.

This application is being referred to Technology Center AU 2193 for further prosecution, including consideration by the examiner of record of the foreign priority claim under 35 U.S.C. § 119(a)-(d).

Any inquiries directly pertaining to this matter may be directed to Sherry D. Brinkley at (571) 272-3204 .

Sherry D. Brinkley
Petitions Examiner
Office of Petitions

Frances M. Hicks
Lead, Petitions Examiner
Office of Petitions

ATTACHMENT: Corrected Filing Receipt

UNITED STATES PATENT AND TRADEMARK OFFICE

UNITED STATES DEPARTMENT OF COMMERCE
United States Patent and Trademark Office
Address: COMMISSIONER FOR PATENTS
P.O. Box 1450
Alexandria, Virginia 22313-1450
www.uspto.gov

APPL NO.	FILING OR 371(c) DATE	ART UNIT	FIL FEE REC'D	ATTY.DOCKET NO	TOT CLMS	IND CLMS
10/612,825	07/01/2003	2193	900	851763.434	18	3

CONFIRMATION NO. 3917

CORRECTED FILING RECEIPT

OC000000024778120

500
SEED INTELLECTUAL PROPERTY LAW GROUP PLLC
701 FIFTH AVE
SUITE 5400
SEATTLE, WA 98104

Date Mailed: 07/12/2007

Receipt is acknowledged of this nonprovisional patent application. The application will be taken up for examination in due course. Applicant will be notified as to the results of the examination. Any correspondence concerning the application must include the following identification information: the U.S. APPLICATION NUMBER, FILING DATE, NAME OF APPLICANT, and TITLE OF INVENTION. Fees transmitted by check or draft are subject to collection. Please verify the accuracy of the data presented on this receipt. **If an error is noted on this Filing Receipt, please write to the Office of Initial Patent Examination's Filing Receipt Corrections. Please provide a copy of this Filing Receipt with the changes noted thereon. If you received a "Notice to File Missing Parts" for this application, please submit any corrections to this Filing Receipt with your reply to the Notice. When the USPTO processes the reply to the Notice, the USPTO will generate another Filing Receipt incorporating the requested corrections (if appropriate).**

Applicant(s)

Fabrizio Simone Rovati, Cinisello Balsamo, ITALY;
Antonio Maria Borneo, Matera, ITALY;
Danilo Pietro Pau, Sesto San Giovanni, ITALY;

Assignment For Published Patent Application

STMicroelectronics S.r.l., Agrate Brianza, ITALY

Power of Attorney:

Robert Ward--26517
William Ferron Jr--30633
David Carlson--31153
Earl Tarleton--31800
Michael Folise--31952
Richard Sharkey--32629
Carol Roth--32783
Karl Hermanns--33507
Robert Iannucci--33514
Lisa Jorgenson--34845

Domestic Priority data as claimed by applicant

Foreign Applications

EUROPEAN PATENT OFFICE (EPO) 02425437.7 07/02/2002

If Required, Foreign Filing License Granted: 09/26/2003

The country code and number of your priority application, to be used for filing abroad under the Paris

Convention, is US10/612,825

Projected Publication Date: Not Applicable

Non-Publication Request: No

Early Publication Request: No

Title

Process for running programs with selectable instruction length processors and corresponding processor system

Preliminary Class

717

PROTECTING YOUR INVENTION OUTSIDE THE UNITED STATES

Since the rights granted by a U.S. patent extend only throughout the territory of the United States and have no effect in a foreign country, an inventor who wishes patent protection in another country must apply for a patent in a specific country or in regional patent offices. Applicants may wish to consider the filing of an international application under the Patent Cooperation Treaty (PCT). An international (PCT) application generally has the same effect as a regular national patent application in each PCT-member country. The PCT process **simplifies** the filing of patent applications on the same invention in member countries, but **does not result** in a grant of "an international patent" and does not eliminate the need of applicants to file additional documents and fees in countries where patent protection is desired.

Almost every country has its own patent law, and a person desiring a patent in a particular country must make an application for patent in that country in accordance with its particular laws. Since the laws of many countries differ in various respects from the patent law of the United States, applicants are advised to seek guidance from specific foreign countries to ensure that patent rights are not lost prematurely.

Applicants also are advised that in the case of inventions made in the United States, the Director of the USPTO must issue a license before applicants can apply for a patent in a foreign country. The filing of a U.S. patent application serves as a request for a foreign filing license. The application's filing receipt contains further information and guidance as to the status of applicant's license for foreign filing.

Applicants may wish to consult the USPTO booklet, "General Information Concerning Patents" (specifically, the section entitled "Treaties and Foreign Patents") for more information on timeframes and deadlines for filing foreign patent applications. The guide is available either by contacting the USPTO Contact Center at 800-786-9199, or it can be viewed on the USPTO website at http://www.uspto.gov/web/offices/pac/doc/general/index.html.

For information on preventing theft of your intellectual property (patents, trademarks and copyrights), you may wish to consult the U.S. Government website, http://www.stopfakes.gov. Part of a Department of Commerce initiative, this website includes self-help "toolkits" giving innovators guidance on how to protect intellectual property in specific countries such as China, Korea and Mexico. For questions regarding patent enforcement issues, applicants may call the U.S. Government hotline at 1-866-999-HALT (1-866-999-4158).

LICENSE FOR FOREIGN FILING UNDER
Title 35, United States Code, Section 184
Title 37, Code of Federal Regulations, 5.11 & 5.15

GRANTED

The applicant has been granted a license under 35 U.S.C. 184, if the phrase "IF REQUIRED, FOREIGN FILING LICENSE GRANTED" followed by a date appears on this form. Such licenses are issued in all applications where the conditions for issuance of a license have been met, regardless of whether or not a license may be required as set forth in 37 CFR 5.15. The scope and limitations of this license are set forth in 37 CFR 5.15(a) unless an earlier license has been issued under 37 CFR 5.15(b). The license is subject to revocation upon written notification. The date indicated is the effective date of the license, unless an earlier license of similar scope has been granted under 37 CFR 5.13 or 5.14.

This license is to be retained by the licensee and may be used at any time on or after the effective date thereof unless it is revoked. This license is automatically transferred to any related applications(s) filed under 37 CFR 1.53(d). This license is not retroactive.

The grant of a license does not in any way lessen the responsibility of a licensee for the security of the subject matter as imposed by any Government contract or the provisions of existing laws relating to espionage and the national security or the export of technical data. Licensees should apprise themselves of current regulations especially with respect to certain countries, of other agencies, particularly the Office of Defense Trade Controls, Department of State (with respect to Arms, Munitions and Implements of War (22 CFR 121-128)); the Bureau of Industry and Security, Department of Commerce (15 CFR parts 730-774); the Office of Foreign Assets Control, Department of Treasury (31 CFR Parts 500+) and the Department of Energy.

NOT GRANTED

No license under 35 U.S.C. 184 has been granted at this time, if the phrase "IF REQUIRED, FOREIGN FILING LICENSE GRANTED" DOES NOT appear on this form. Applicant may still petition for a license under 37 CFR 5.12, if a license is desired before the expiration of 6 months from the filing date of the application. If 6 months has lapsed from the filing date of this application and the licensee has not received any indication of a secrecy order under 35 U.S.C. 181, the licensee may foreign file the application pursuant to 37 CFR 5.15(b).

UNITED STATES PATENT AND TRADEMARK OFFICE

UNITED STATES DEPARTMENT OF COMMERCE
United States Patent and Trademark Office
Address: COMMISSIONER FOR PATENTS
P.O. Box 1450
Alexandria, Virginia 22313-1450
www.uspto.gov

SEED INTELLECTUAL PROPERTY LAW GROUP PLLC
701 FIFTH AVE
SUITE 5400
SEATTLE, WA 98104

Mail Date: 04/21/2010

Applicant	: Fabrizio Simone Rovati	: DECISION ON REQUEST FOR
Patent Number	: 7617494	: RECALCULATION of PATENT
Issue Date	: 11/10/2009	: TERM ADJUSTMENT IN VIEW
Appliction No	: 10/612,825	: OF WYETH AND NOTICE OF INTENT TO
Filed	: 07/01/2003	: ISSUE CERTIFICATE OF CORRECTION
		:

The Request for Recalculation is **GRANTED** to the extent indicated.

The patent term adjustment has been determined to be **1249** days. The USPTO will *sua sponte* issue a certificate of correction reflecting the amount of PTA days determined by the recalculation.

Prior to the issuance of the certificate of correction, the USPTO will afford patentee an opportunity to be heard and request reconsideration. Accordingly, patentee has **one month or thirty (30) days**, whichever is longer, to file a request for reconsideration of this patent term adjustment calculation. See 35 U.S.C. 154(b)(3)(B)(ii) and 37 CFR 1.322(a)(4). No extensions of time will be granted under 37 CFR 1.136.

Patentee should use document code PET.OP if electronically filing a request for reconsideration of this patent term adjustment calculation. The patentee must also include the information required by 37 CFR 1.705(b)(2) and the fee required by 37 CFR 1.18(e). If patentee does not file a timely request for reconsideration of this patent term adjustment calculation including the information required by 37 CFR 1.705(b)(2) and the fee required by 37 CFR 1.18(e), the USPTO will issue a certificate of correction reflecting the PTA determination noted above.

Patentee should be aware that in order to preserve the right to review in the United States District Court for the District of Columbia of the USPTO patent term adjustment determination, patentee must ensure that he or she also take the steps required under 35 U.S.C. 154(b)(4)(A) in a timely manner. Nothing in the request for recalculation should be construed as providing an alternative time frame for commencing a civil action under 35 U.S.C. 154(b)(4)(A).

Any questions concerning this decision should be directed to the Office of Patent Legal Administration at 571-272-7702.

UNITED STATES PATENT AND TRADEMARK OFFICE

Commissioner for Patents
United States Patent and Trademark Office
P.O. Box 1450
Alexandria, VA 22313-1450
www.uspto.gov

Paper No. 082004

MORRISON & FOERSTER LLP
755 PAGE MILL RD.
PALO ALTO, CA 94304-1018

AUG 30 2004

In re Application of:
SCOTT A. COOPER
Serial No.: 10/612,829
Filed: July 01, 2003
Attorney Docket No.: **549212000200**

DECISION ON REQUEST TO WITHDRAW FROM RECORD

This is a decision on the request to withdraw as attorney/agent of record under 37 C.F.R. § 1.36, filed July 27, 2004.

A grantable request to withdraw as attorney of record must be signed by every attorney seeking to withdraw or contain a clear indication that one attorney is signing on behalf of others. A request to withdraw will not be approved unless at least thirty (30) days would remain between the date of approval and the later of the expiration date of a time to file a response or the expiration date of the maximum time period, which can be extended under 37 C.F.R. § 1.136(a).

The request meets all the above stated requirements. The request was signed by Norman R. Klivans, on behalf of himself and all the attorneys/agents of record. There is no outstanding Office action at this time.

The request is **APPROVED**.

All future communications from the Office will be directed to David B. Ritchie, at the below address, until otherwise notified by applicant.

Inquiries related to this decision should be directed to Lissi Marquis at (571) 272-1596.

Lissi Marquis, Special Programs Examiner
Technology Center 2800
Semiconductors, Electrical and Optical
Systems and Components

cc: DAVID B. RITCHIE
THELEN REID & PRIEST, LLP
225 WEST SANTA CLARA STREET
SUITE 1200
SAN JOSE, CA 95113-1723

UNITED STATES PATENT AND TRADEMARK OFFICE

COMMISSIONER FOR PATENTS
UNITED STATES PATENT AND TRADEMARK OFFICE
P.O. BOX 1450
ALEXANDRIA, VA 22313-1450
www.uspto.gov

DAVID B. RITCHIE
THELEN REID & PRIEST, LLP
P. O. Box 640640
SAN JOSE, CA 95164-0640

COPY MAILED

DEC 0 3 2004

OFFICE OF PETITIONS

In re Application of	:	
Scott A. Cooper, et al.	:	
Application No. 10/612,829	:	NOTICE
Filed: July 1, 2003	:	
Attorney Docket No. IMPJ-0015		

This is a notice regarding your request for acceptance of a fee deficiency submission under 37 CFR 1.28. On September 1, 1998, the Court of Appeals for the Federal Circuit held that 37 CFR 1.28(c) is the sole provision governing the time for correction of the erroneous payment of the issue fee as a small entity. **See DH Technology v. Synergystex International, Inc. 154 F.3d 1333, 47 USPQ2d 1865 (Fed. Cir. Sept. 1, 1998).**

The Office no longer investigates or rejects original or reissue applications under 37 CFR 1.56. **1098 Off. Gaz. Pat. Office 502 (January 3, 1989)**. Therefore, nothing in this Notice is intended to imply that an investigation was done.

Your fee deficiency submission under 37 CFR 1.28 is hereby **ACCEPTED**.

Inquiries related to this communication should be directed to the Office of Petitions Staff at (571) 272-3201.

This file is being referred to Technology Center 2819.

Sherry D. Brinkley
Petitions Examiner
Office of Petitions
Office of the Deputy Commissioner
for Patent Examination Policy

SPE RESPONSE FOR CERTIFICATE OF CORRECTION

Paper No.: _____

DATE : 09/22/08

TO SPE OF : ART UNIT 2192

SUBJECT : Request for Certificate of Correction for Appl. No.: 10612831 Patent No.: 7395532 B2

Please respond to this request for a certificate of correction within 7 days.

FOR IFW FILES:

Please review the requested changes/corrections as shown in the **COCIN** document(s) in the IFW application image. No new matter should be introduced, nor should the scope or meaning of the claims be changed.

Please complete the response (see below) and forward the completed response to scanning using document code **COCX**.

FOR PAPER FILES:

Please review the requested changes/corrections as shown in the attached certificate of correction. Please complete this form (see below) and forward it with the file to:

Certificates of Correction Branch (CofC)
South Tower - 9A22
Palm Location 7580

Lamonte M. Newsome
Certificates of Correction Branch
703-308-9390 ext. 112

Thank You For Your Assistance

The request for issuing the above-identified correction(s) is hereby:
Note your decision on the appropriate box.

xApproved	**All** changes apply.
☐ **Approved in Part**	Specify below which changes **do not** apply.
☐ **Denied**	State the reasons for denial below.

Comments: Clerical nature. O.K. to be entered.

SPE RESPONSE FOR CERTIFICATE OF CORRECTION

SPE /Tuan Q. Dam/ Art Unit 2192

UNITED STATES PATENT AND TRADEMARK OFFICE

Commissioner for Patents
United States Patent and Trademark Office
P.O. Box 1450
Alexandria, VA 22313-1450
www.uspto.gov

INTEL CORPORATION
c/o CPA Global
P.O. BOX 52050
MINNEAPOLIS, MN 55402

MAILED

MAR 25 2009

OFFICE OF PETITIONS

In re Application of Ashay A. Dani, et al. Application No. 10/612,834 Filed: June 30, 2003 Attorney Docket No. 884.945US1	: : : : :	ON PETITION

This is a decision on the petition under 37 CFR 1.137(b), filed January 21, 2009 to revive the above-identified application.

The petition is **GRANTED**.

The application became abandoned for a failure to timely respond to a Notice to File Corrected Application Papers (Notice) mailed September 23, 2008. On December 11, 2008, a Notice of Abandonment was mailed. On January 21, 2009, the present petition was filed.

The petition satisfies the requirements of 37 CFR 1.137(b) in that petitioner has supplied (1) the reply in the form of replacement drawings; (2) the petition fee of $1,620; and (3) an adequate statement of unintentional delay.

The application is being referred to the Office of Data Management to be processed into a patent.

Telephone inquires related to this decision should be directed to the undersigned at (571) 272-3204. Telephone inquiries related to processing as a patent should be directed to (571) 272-4200.

Sherry D. Brinkley
Petitions Examiner
Office of Petitions

UNITED STATES PATENT AND TRADEMARK OFFICE

COMMISSIONER FOR PATENTS
UNITED STATES PATENT AND TRADEMARK OFFICE
P.O. BOX 1450
ALEXANDRIA, VA 22313-1450
www.uspto.gov

Pendorf & Cutliff
5111 Memorial Highway
Tampa FL 33634-7356

COPY MAILED

DEC 1 8 2003

OFFICE OF PETITIONS

In re Application of
Biswas et al.
Application No. 10/612,848
Filed: July 3, 2003
Attorney Docket No. 3875.023

DECISION GRANTING PETITION

This is a decision on the petition under 37 CFR 1.53(e), filed October 16, 2003, requesting that the above-identified application be accorded a filing date of July 3, 2003, with Figures 1-6 as part of the original disclosure.

On July 3, 2003, applicant deposited the above-identified application. On October 2, 2003, the Office of Initial Patent Examination mailed a "Notice of Incomplete Nonprovisional Application," stating that the application had not been accorded a filing date as the application was deposited without drawings and that the filing date would be the date of receipt of the items.

In response, on October 16, 2003, applicant filed the present petition and a copy of applicant's postcard receipt acknowledging receipt of 6 sheets of drawings (Figures 1-6) on July 3, 2003. Additionally, applicant submitted a copy of the 6 sheets of drawings.

Upon review of the record, the 6 sheets of drawings deposited on July 3, 2003, have not been located among the application papers. However, the evidence is convincing that the application papers deposited on July 3, 2003, included 6 drawing sheets, which were subsequently misplaced in the United States Patent and Trademark Office. Therefore, the application, including 6 drawing sheets, was complete on filing and will be granted a filing date of July 3, 2003.

Accordingly, the petition is granted.

The "Notice of Incomplete Nonprovisional Application," mailed October 2, 2003, was sent in error and is hereby vacated. Accordingly, the $130.00 petition fee will be credit to Deposit Account No. 16-0877.

The Office of Initial Patent Examination is directed to accord the above-identified application a filing date to July 3, 2003, using Figures 1-6 submitted with the present petition. The Office records should indicate that 6 sheets of drawings were submitted on filing.

Any inquiries related to this decision should be directed to the undersigned at (703) 306-5589.

Christina Tartera Donnell

Christina Tartera Donnell
Senior Petitions Attorney
Office of Petitions

UNITED STATES PATENT AND TRADEMARK OFFICE

COMMISSIONER FOR PATENTS
UNITED STATES PATENT AND TRADEMARK OFFICE
P.O. BOX 1450
ALEXANDRIA, VA 22313-1450
www.uspto.gov
DIW 04-04

DAVID E. BRUHN
DORSEY & WHITNEY LLP
INTELLECTUAL PROPERTY DEPARTMENT
50 SOUTH SIXTH STREET, SUITE 1500
MINNEAPOLIS MN 55402-1498ROGER R. WISE

COPY MAILED

APR 2 6 2004

OFFICE OF PETITIONS

In re Application of	:	
Leonard S. Schultz	:	
Application No. 10/612,862	:	ON PETITION
Filed: 3 July, 2003	:	
Atty's Docket No. 14656	:	

This is a decision on the petition filed on 2 April, 2004, requesting that the above-identified application be accorded a filing date of 3 July, 2003, with Page 19 of the specification as a part of the original disclosure.

The petition is granted.

The application was filed on 3 July, 2003.

Accordingly, on 19 March, 2004, Initial Patent Examination Division mailed a Notice of Omitted Item(s) in a Nonprovisional Application, stating that the application had been accorded a filing date of 3 July, 2003, but that Page 19 of the specification (description and claims) appeared to have been omitted.

In response, on 2 April, 2004, the present petition and a copy of page 19 of the specification was filed. Petitioners argue that Page 19 was filed with the other application papers on 3 July, 2003, but was subsequently misplaced in the U.S. Patent and Trademark Office (Office). In support, a copy of petitioners' postcard receipt was supplied with the present petition. The postcard receipt shows an Office date stamp of 3 July, 2003, and the above-identified application number, and identifies the application by inventor's name, title, and attorney docket number and acknowledges receipt of, *inter alia*, "Specification with Cover Sheet (24 [pages], includes 3 pages of Claims, 1 page Abstract);." Petitioner requests that the application, including

Page 19 of the specification, be accorded a filing date of 3 July, 2003.

A review of the record reveals that no Page 19 of the specification has been located among the application papers received on 3 July, 2003. However, the evidence is convincing that the application papers deposited on 3 July, 2003, included Page 19 of the specification (description and claims), which was subsequently misplaced in the Office. Therefore, the application, including Page 19 of the specification, is entitled to a filing date of 3 July, 2003.

The "Notice" mailed on 19 March, 2004, is withdrawn.

In view of the above, the petition is granted. The petition fee of $130.00 will be credited to counsel's deposit account, No. 04-1420.

The application will be processed with the copy of Page 19 of the specification supplied on 2 April, 2004, as a part of the original disclosure.

The application is being returned to Initial Patent Examination Division for further processing with a filing date of 3 July, 2003, using the application papers filed on that date, and the copy of Page 19 of the specification supplied with the present petition.

Telephone inquires should be directed to the undersigned at 703-308-6918.

DIWood

Douglas I. Wood
Senior Petitions Attorney
Office of Petitions

UNITED STATES PATENT AND TRADEMARK OFFICE

COMMISSIONER FOR PATENTS
UNITED STATES PATENT AND TRADEMARK OFFICE
P.O. BOX 1450
ALEXANDRIA, VA 22313-1450
www.uspto.gov

Alex Chartove
Morrison & Foerster LLP
Suite 300
1650 Tysons Boulevard
McLean, VA 22102

COPY MAILED

SEP 16 2005

OFFICE OF PETITIONS

In re Application of :
John C. Jones, et al. :
Application No. 10/612,877 : ON PETITION
Filed: July 7, 2003 :
Attorney Docket No. 527122000400 :

This is a decision on the petition under 37 CFR 1.137(b), filed June 27, 2005, to revive the above-identified application.

The petition is **GRANTED**.

The application became abandoned for failure to timely file a reply to the Restriction Requirement mailed December 1, 2004.

The petition satisfies the requirements of 37 CFR 1.137(b) in that petitioner has supplied (1) the reply in the form of a Response to Restriction Requirement; (2) the petition fee of $750; and (3) an adequate statement of unintentional delay.

37 CFR 1.137(d) requires a terminal disclaimer dedicating to the public a terminal part of the term of any patent granted on the above-identified application or any patent granted on any continuing application that contains a specific reference under 35 U.S.C. 120, 121, or 365(c) to the above-identified application. Since the application is not a utility or plant application filed before June 8, 1995, a terminal disclaimer is not required. Accordingly, the terminal disclaimer filed with the instant petition is unnecessary. Petitioner may request a refund of the $65 terminal disclaimer fee by writing to the Office of Finance, Refund Section. A copy of this decision should accompany such a request.

Telephone inquiries concerning this decision should be directed to the undersigned at (571) 272-3223.

The application file is being referred to Technology Center 2871.

Marianne E. Jenkins
Petitions Examiner
Office of Petitions

UNITED STATES PATENT AND TRADEMARK OFFICE

Commissioner for Patents
United States Patent and Trademark Office
P.O. Box 1450
Alexandria, VA 22313-1450
www.uspto.gov

JJGJr: 03-06

Paper No: __

MATTINGLY, STANGER,
MALUR & BRUNDIDGE, P.C.
1800 DIAGONAL ROAD
SUITE 370
ALEXANDRIA VA 22314

COPY MAILED
MAR 3 0 2006
OFFICE OF PETITIONS

In re Application of
Araki, et al. :
Application No. 10/612,906 : ON PETITION
Filed: 7 July, 2003 :
Attorney Docket No.: (None/ASA-843-03) :

This is a decision on the petition filed on 15 February, 2006, requesting withdrawal of the holding of abandonment under 37 C.F.R. §1.181, and alternatively alleging unintentional delay under 37 C.F.R. §1.137(b).

For the reasons set forth below, the petition as considered under 37 C.F.R. §1.181 is **DISMISSED**, and the petition under 37 C.F.R. §1.137(b) is **GRANTED**.

BACKGROUND

It appears that:

- following mailing of the Notice of Allowance and Fees Due accompanied by the Notice of Allowability on 29 March, 2005, Petitioner failed to respond timely and properly to the Notice of Drawing Requirement mailed on 24 August, 2005, with reply due under a non-extendable deadline on or before 24 October, 2005;

- the instant application went abandoned after midnight 24 October, 2005;

- the Office mailed the Notice of Abandonment on 30 January, 2006;

- Petitioner filed, *inter alia*, the instant petition on 15 February, 2006, with fee authorization and a reply in the form of drawings, and indicated that she timely filed a response on or about 30 August, 2005, however, it appears that Petitioner submitted by E-mail at that time some drawings for the Examiner to review and determine the sufficiency of quality, which the Examiner did on 31 August, 2005, however, there is no indication that all of the drawings were submitted as a formal and complete reply to the 24 August, 2005, Notice of Drawing Requirements, and so received by the Office;

- thus, the showing provided by Petitioner as of this writing is not in the nature of, for example, in the form of a date-stamped receipt cards (see: MPEP §503[1]) to support allegations as to any content and completeness of filings before the Office.

---

[1] MPEP §503 provides in pertinent part:

§503 Application Number and Filing Receipt

* * *

A return postcard should be attached to *each* patent application for which a receipt is desired. It is important that the return postcard itemize all of the components of the application. If the postcard does not itemize each of the components of the application, it will not serve as evidence that any component which was not itemized was received by the United States Patent and Trademark Office (USPTO). It should be recognized that the identification of an application by application number does not necessarily signify that the USPTO has accepted the application as complete (37 C.F.R. §1.53(a)).

* * *

RETURN POSTCARD

If a receipt of any item (e.g., paper or fee) filed in the USPTO is desired, it may be obtained by enclosing with the paper a self-addressed postcard specifically identifying the item. The USPTO will stamp the receipt date on the postcard and place it in the outgoing mail. A postcard receipt which itemizes and properly identifies the items which are being filed serves as *prima facie* evidence of receipt in the USPTO of all the items listed thereon on the date stamped thereon by the USPTO.

The identifying data on the postcard should be so complete as to clearly identify the item for which receipt is requested. For example, the postcard should identify the applicant's name, application number (if known), confirmation number (if known), filing date, interference number, title of the invention, etc. The postcard should also identify the type of paper being filed, e.g., new application, affidavit, amendment, notice of appeal, appeal brief, drawings, fees, motions, supplemental oath or declaration, petition, etc., and the number of pages being submitted. If a new application is being filed, all parts of the application being submitted should be separately listed on the postcard, e.g., the number of pages of specification (including written description, claims and abstract), number of claims, number of sheets of drawings, number of pages of oath/declaration, number of pages of cover sheet (provisional application).

The postcard receipt will not serve as *prima facie* evidence of receipt of any item which is not adequately itemized on the postcard. For example, merely listing on the postcard "a complete application" or "patent application" will not serve as a proper receipt for each of the required components of an application (e.g., specification (including claims), drawings (if necessary), oath or declaration and the application filing fee) or missing portions (e.g., pages, sheets of drawings) of an application if one of the components or portion of a component is found to be missing by the USPTO. Each separate component should be specifically and properly itemized on the postcard. Furthermore, merely incorporating by reference in the postcard receipt, the items listed in a transmittal letter will not serve as *prima facie* evidence of receipt of those items.

The person receiving the item(s) in the USPTO will check the listing on the postcard against the item(s) being filed to be sure they are properly identified and that all the items listed on the postcard are presently being submitted to the USPTO. If any of the items listed on the postcard are not being submitted to the USPTO, those items will be crossed off and the post-card initialed by the person receiving the items. Upon return of a postcard receipt from the USPTO, the postcard receipt should be promptly reviewed by the person who filed the items to ensure that every item specifically denoted on the postcard was received by the USPTO. If the postcard receipt has been annotated to indicate that a particular item denoted on the postcard was not received by the USPTO, the postcard receipt will not serve as *prima facie* evidence of receipt of that item in the USPTO. (Emphasis supplied.)

STATUTES, REGULATIONS AND ANALYSIS

Congress has authorized the Commissioner to "revive an application if the delay is shown to the satisfaction of the Commissioner to have been "unavoidable." 35 U.S.C. §133 (1994).[2]

The regulations at 37 C.F.R. §1.137(a) and (b) set forth the requirements for a petitioner to revive a previously unavoidably or unintentionally, respectively, abandoned application under this congressional grant of authority. The language of 35 U.S.C. §133 and 37 C.F.R. §1.137(a) is clear, unambiguous, and without qualification: the delay in tendering the reply to the outstanding Office action, as well as filing the first petition seeking revival, must have been unavoidable for the reply now to be accepted on petition.[3]

Delays in responding properly raise the question whether delays are unavoidable.[4] Where there is a question whether the delay was unavoidable, Petitioners must meet the burden of establishing that the delay was unavoidable within the meaning of 35 U.S.C. §133 and 37 C.F.R. §1.137(a).[5] And the Petitioner must be diligent in attending to the matter.[6] Failure to do so does not constitute the care required under Pratt, and so cannot satisfy the test for diligence and due care.

(By contrast, unintentional delays are those that do not satisfy the very strict statutory and regulatory requirements of unavoidable delay, and also, by definition, are not intentional.[7]))

Allegations as to the Request to Withdraw the Holding of Abandonment

The courts have determined the construct for properly supporting a petition seeking withdrawal

---

[2] 35 U.S.C. §133 provides:
35 U.S.C. §133 Time for prosecuting application.
Upon failure of the applicant to prosecute the application within six months after any action therein, of which notice has been given or mailed to the applicant, or within such shorter time, not less than thirty days, as fixed by the Commissioner in such action, the application shall be regarded as abandoned by the parties thereto, unless it be shown to the satisfaction of the Commissioner that such delay was unavoidable.

[3] Therefore, by example, an unavoidable delay in the payment of the Filing Fee might occur if a reply is shipped by the US Postal Service, but due to catastrophic accident, the delivery is not made.

[4] See: *Changes to Patent Practice and Procedure; Final Rule Notice*, 62 *Fed. Reg.* at 53158-59 (October 10, 1997), 1203 *Off. Gaz. Pat. Office* at 86-87 (October 21, 1997).

[5] See: In re Application of G, 11 USPQ2d 1378, 1380 (Comm'r Pats. 1989).

[6] See: Diligence in Filing Petitions to Revive and Petitions to Withdraw the Holding of Abandonment, 1124 Off. Gaz. Pat. Office 33 (March 19, 1991). It was and is Petitioner's burden to exercise diligence in seeking either to have the holding of abandonment withdrawn or the application revived. See 1124 Off. Gaz. Pat. Office supra.

[7] Therefore, by example, an unintentional delay in the reply might occur if the reply and transmittal form are to be prepared for shipment by the US Postal Service, but other pressing matters distract one's attention and the mail is not timely deposited for shipment.

of a holding of abandonment.[8]

The commentary at MPEP §711.03(c) provides:

* * *

B. Petition To Withdraw Holding of Abandonment Based on Evidence That a Reply Was Timely Mailed or Filed

37 C.F.R. §1.10(c) through §1.10(e) and §1.10(g) set forth procedures for petitioning the Director of the USPTO to accord a filing date to correspondence as of the date of deposit of the correspondence as "Express Mail." A petition to withdraw the holding of abandonment relying upon a timely reply placed in "Express Mail" must include an appropriate petition under 37 C.F.R. §1.10(c), (d), * (e), or (g) (see MPEP § 513). When a paper is shown to have been mailed to the Office using the "Express Mail" procedures, the paper must be entered in PALM with the "Express Mail" date.

Similarly, applicants may establish that a reply was filed with a postcard receipt that properly identifies the reply and provides *prima facie* evidence that the reply was timely filed. See MPEP § 503. For example, if the application has been held abandoned for failure to file a reply to a first Office action, and applicant has a postcard receipt showing that an amendment was timely filed in response to the Office action, then the holding of abandonment should be withdrawn upon the filing of a petition to withdraw the holding of abandonment. When the reply is shown to have been timely filed based on a postcard receipt, the reply must be entered into PALM using the date of receipt of the reply as shown on the post card receipt.

Where a certificate of mailing under 37 C.F.R. §1.8, but not a postcard receipt, is relied upon in a petition to withdraw the holding of abandonment, see 37 C.F.R. §1.8(b) and MPEP § 512. As stated in 37 C.F.R. §1.8(b)(3) the statement that attests to the previous timely mailing or transmission of the correspondence must be on a personal knowledge basis, or to the satisfaction of the Director of the USPTO. If the statement attesting to the previous

---

[8] See: Delgar v. Schulyer, 172 USPQ 513 (D.D.C. 1971).

> timely mailing is not made by the person who signed the Certificate of Mailing (i.e., there is no personal knowledge basis), then the statement attesting to the previous timely mailing should include evidence that supports the conclusion that the correspondence was actually mailed (e.g., copies of a mailing log establishing that correspondence was mailed for that application). When the correspondence is shown to have been timely filed based on a certificate of mailing, the correspondence is entered into PALM with the actual date of receipt (i.e., the date that the duplicate copy of the papers was filed with the statement under 37 C.F.R. §1.8).
>
> 37 C.F.R. §1.8(b) also permits applicant to notify the Office of a previous mailing or transmission of correspondence and submit a statement under 37 C.F.R. 1.8(b)(3) accompanied by a duplicate copy of the correspondence when a reasonable amount of time (e.g., more than one month) has elapsed from the time of mailing or transmitting of the correspondence. Applicant does not have to wait until the application becomes abandoned before notifying the Office of the previous mailing or transmission of the correspondence. Applicant should check the private Patent Application Information Retrieval (PAIR) system for the status of the correspondence before notifying the Office. See MPEP § 512.
>
> * * *

Thus, Petitioner appears not to have satisfied the showing requirements described above. Petitioner has failed to carry his burden in this matter so as to obtain relief under the provisions of 37 C.F.R. §1.181.

Therefore, relief cannot be granted under the provisions of 37 C.F.R. §1.181.

Allegations as to
Unintentional Delay

The requirements for relief under the provisions of 37 C.F.R. §1.137(b) are: petition, fee, reply, showing of unintentional delay, and–where appropriate–a terminal disclaimer and fee.

It appears that Petitioner has satisfied the requirements of the regulation.

CONCLUSION

Because Petitioner has not satisfied the burdens set forth in Delgar v. Schulyer and within the regulation, the petition under 37 C.F.R. §1.181 hereby is **dismissed**, and the 8 September, 2004, Notice of Abandonment is maintained.

However, the petition under 37 C.F.R. §1.137(b) is **granted**.

The instant application is released to Publications Branch to be processed into a patent in due course.

Telephone inquiries concerning this decision may be directed to the undersigned at (571) 272-3214.

John J. Gillon, Jr.
Senior Attorney
Office of Petitions

UNITED STATES PATENT AND TRADEMARK OFFICE

Commissioner for Patents
United States Patent and Trademark Office
P.O. Box 1450
Alexandria, VA 22313-1450
www.uspto.gov

MATTINGLY, STANGER, MALUR & BRUNDIDGE
1800 DIAGONAL ROAD
SUITE 370
ALEXANDRIA VA 22314

COPY MAILED
MAY 1 8 2006
OFFICE OF PETITIONS

In re Application of	:	
Massanori Araki et al	:	
Application No. 10/612,906	:	ON PETITION
Filed: July 7, 2003	:	
Attorney Docket No. ASA-843-03	:	

This is a decision on the petition, filed May 17, 2006, under 37 CFR 1.313(c)(2) to withdraw the above-identified application from issue after payment of the issue fee.

The petition is **GRANTED.**

The above-identified application is withdrawn from issue for consideration of a submission under 37 CFR 1.114 (request for continued examination). See 37 CFR 1.313(c)(2).

Petitioner is advised that the issue fee paid on June 28, 2005, in the above-identified application cannot be refunded. If, however, the above-identified application is again allowed, petitioner may request that it be applied towards the issue fee required by the new Notice of Allowance.[1]

Telephone inquiries should be directed to the undersigned at (571) 272-3208.

The examiner of Technology Center AU 2182 will consider the request for continued examination under 37 CFR 1.114.

Karen Creasy
Petitions Examiner
Office of Petitions

---

[1] The request to apply the issue fee to the new Notice may be satisfied by completing and returning the new Issue Fee Transmittal Form PTOL-85(b), which includes the following language thereon: "Commissioner for Patents is requested to apply the Issue Fee and Publication Fee (if any) or re-apply any previously paid issue fee to the application identified above." Petitioner is advised that, whether a fee is indicated as being due or not, the Issue Fee Transmittal Form **must** be completed and timely submitted to avoid abandonment. Note the language in bold text on the first page of the Notice of Allowance and Fee(s) Due (PTOL-85).

IN THE UNITED STATES PATENT AND TRADEMARK OFFICE

Appl. No.	:	10/612,906	Confirmation No. 4320
Applicant	:	M. ARAKI et al	
Filed	:	July 7, 2003	
Titled	:	STORAGE SYSTEM	
TC/A.U.	:	2182	
Examiner	:	H. Kim	
Docket No.	:	ASA-843-03	
Customer No.:		24956	

RECEIVED
MAY 17 2006
OFFICE OF PETITIONS

Commissioner for Patents
Mail Stop Petitions
P.O. Box 1450
Alexandria, VA 22313-1450

PETITION UNDER 37 CFR §1.313(c)(2)
TO WITHDRAW THE APPLICATION FROM ISSUE

Sir:

Applicants hereby petition under 37 CFR §1.313(c)(2) to withdraw the above-identified application from issue. A Request for Continued Examination (RCE) accompanies this Petition. This application is being withdrawn from issue so that the documents contained in an accompanying Information Disclosure Statement may be properly considered on the merits.

The Commissioner is hereby authorized to charge Deposit Account 50-1417 for any additional fees that are deemed necessary.

Respectfully submitted,

MATTINGLY, STANGER, MALUR & BRUNDIDGE, P.C.

By _____
Shrinath Malur
Reg. No. 34,663
(703) 684-1120

May 17, 2006

05/18/2006 CKHLOK 00000002 10612906
01 FC:1464 130.00 OP

UNITED STATES PATENT AND TRADEMARK OFFICE

COMMISSIONER FOR PATENTS
UNITED STATES PATENT AND TRADEMARK OFFICE
P.O. BOX 1450
ALEXANDRIA, VA 22313-1450
www.uspto.gov

Paper No.

FINNEGAN, HENDERSON, FARABOW,
GARRETT & DUNNER
LLP
901 NEW YORK AVENUE, NW
WASHINGTON DC 20001-4413

COPY MAILED

AUG 07 2009

OFFICE OF PETITIONS

In re Patent No. 7,455,831	:	
Vicic et al.	:	DECISION DISMISSING
Application No. 10/612,916	:	REQUEST FOR
Issue Date: November 25, 2008	:	RECONSIDERATION OF
Filed: July 7, 2003	:	PATENT TERM ADJUSTMENT
Attorney Docket No.	:	UNDER 37 CFR 1.705
05725.1222-00	:	

This is in response to the APPLICATION FOR PATENT TERM ADJUSTMENT—POST GRANT, filed on December 30, 2008. Patentee requests that the determination of patent term adjustment be corrected from five hundred thirty-six (536) days to nine hundred eight-three (983) days.

The request for reconsideration of patent term adjustment is **DISMISSED** with respect to making any change in the patent term adjustment determination under 35 U.S.C. § 154(b) of 536 days.

BACKGROUND

This application was filed on July 7, 2003. On November 15, 2007, a request for continued examination (RCE) was filed. On August 7, 2008, the Office mailed a notice that the initial determination of patent term adjustment under 35 U.S.C. 154(b)

to date is 536 days[1]. On November 25, 2008, the application matured into U.S. Patent No. 7,455,831, with a revised patent term adjustment of 536 days. The Office determined that the 496 days of Office delay pursuant to 35 U.S.C. 154(b)(1)(B) and 37 CFR 1.702(b)[2,3] overlaps with the 717 days of Office delay pursuant to 35 U.S.C. 154(b)(1)(A) and 37 CFR 1.702(a)(1)[4,5] accorded prior to the filing of the request for continued examination. As such, the Office allowed only entry of the adjustment of 717 days. No additional days of patent term adjustment were entered at issuance under the three-year pendency provision. Given the applicant delay of 181 days, the patent issued with a revised patent term adjustment of 536 (717 - 181) days.

---

[1] 717 days of Office delay was reduced by 181 days of applicant delay for a patent term adjustment of 536 days. No request for reconsideration of this initial determination was filed.

[2] Pursuant to 35 U.S.C. 154(b)(1)(B), 37 CFR 1.702(b) provides, in pertinent part, that:

> Failure to issue a patent within three years of the actual filing date of the application. Subject to the provisions of 35 U.S.C. 154(b) and this subpart, the term of an original patent shall be adjusted if the issuance of the patent was delayed due to the failure of the Office to issue a patent within three years after the date on which the application was filed under 35 U.S.C. 111(a) or the national stage commenced under 35 U.S.C. 371(b) or (f) in an international application, but not including:
>
> (i) any time consumed by continued examination of the application requested by the applicant under section 132(b).

[3] As of the filing of the RCE on November 15, 2007, the application was pending three years and 496 days.

[4] 37 CFR § 1.702, provides grounds for adjustment of patent term due to examination delay under the Patent Term Guarantee Act of 1999 (original applications, other than designs, filed on or after May 29, 2000).

> (a) Failure to take certain actions within specified time frames. Subject to the provisions of 35 U.S.C. 154(b) and this subpart, the term of an original patent shall be adjusted if the issuance of the patent was delayed due to the failure of the Office to:
>
> (1) Mail at least one of a notification under 35 U.S.C. 132 or a notice of allowance under 35 U.S.C. 151 not later than fourteen months after the date on which the application was filed under 35 U.S.C. 111(a) or fulfilled the requirements of 35 U.S.C. 371 in an international application;

[5] A first Office action was not mailed until August 25, 2006, fourteen months and 717 days after the application filing date, July 7, 2003.

On December 30, 2008, patentee timely submitted this request for reconsideration of patent term adjustment (with required fee), asserting that the correct number of days of Patent Term Adjustment is 983 days under the courts interpretation of the overlap provision as set forth in Wyeth v. Dudas, 580 F. Supp. 2d 138, 88 U.S.P.Q. 2d 1538 (D.D.C. 2008). Patentee asserts that pursuant to Wyeth, a PTO delay under §154(b)(1)(A) overlaps with a delay under §154(b)(1)(B) only if the delays "occur on the same day." Patentee maintains that the total non-overlapping PTO delay under §154(b)(1)(A) & (B) is 1164 (717 + 447) days as these periods do not occur on the same day.[6] Further, given the applicant delay of 181 days, patentee asserts entitlement to 983 (1164 - 181) days of patent term adjustment.

OPINION

Patentee's interpretation of the period of overlap has been considered, but found inconsistent with the Office's interpretation of the overlap provision, 35 U.S.C. 154(b)(2)(A). 35 U.S.C. 154(b)(2)(A) limits the adjustment of patent term, as follows:

> to the extent that the periods of delay attributable to grounds specified in paragraph (1) overlap, the period of any adjustment granted under this subsection shall not exceed the actual number of days the issuance of the patent was delayed.

As explained in *Explanation of 37 CFR 1.703(f)*[7] *and of the United States Patent and Trademark Office Interpretation of 35 U.S.C. 154(b)(2)(A)*, 69 Fed. Reg. 34283 (June 21, 2004), the Office interprets 35 U.S.C. 154(b)(2)(A) as permitting either patent term adjustment under 35 U.S.C. 154(b)(1)(A)(i)-(iv), or patent term adjustment under 35 U.S.C. 154(b)(1)(B), but not as

---

[6] Patentees state that the overlapping period is 49 days, between the start of the three year period on July 7, 2006, and the issuance of the first Office action on August 25, 2006, 49 days later.

[7] Likewise, 37 CFR 1.703(f) provides that:

> To the extent that periods of delay attributable to the grounds specified in §1.702 overlap, the period of adjustment granted under this section shall not exceed the actual number of days the issuance of the patent was delayed.

permitting patent term adjustment under both 35 U.S.C. 154(b)(1)(A)(i)-(iv) and 154(b)(1)(B). Accordingly, the Office implements the overlap provision as follows:

> If an application is entitled to an adjustment under 35 U.S.C. 154(b)(1)(B), the entire period during which the application was pending (except for periods excluded under 35 U.S.C. 154(b)(1)(B)(i)-(iii)), and not just the period beginning three years after the actual filing date of the application, is the period of delay under 35 U.S.C. 154(b)(1)(B) in determining whether periods of delay overlap under 35 U.S.C. 154(b)(2)(A). Thus, any days of delay for Office issuance of the patent more than 3 years after the filing date of the application, which overlap with the days of patent term adjustment accorded prior to the issuance of the patent will not result in any additional patent term adjustment. See 35 U.S.C. 154(b)(1)(B), 35 U.S.C. 154(b)(2)(A), and 37 CFR § 1.703(f). See *Changes to Implement Patent Term Adjustment Under Twenty Year Term; Final Rule*, 65 Fed. Reg. 54366 (Sept. 18, 2000). See also *Revision of Patent Term Extension and Patent Term Adjustment Provisions; Final Rule*, 69 Fed. Reg. 21704 (April 22, 2004), 1282 Off. Gaz. Pat. Office 100 (May 18, 2004). See also *Explanation of 37 CFR 1.703(f) and of the United States Patent and Trademark Office Interpretation of 35 U.S.C. 154(b)(2)(A)*, 69 Fed. Reg. 34283 (June 21, 2004).

Further, as stated in the *Explanation of 37 CFR 1.703(f) and of the United States Patent and Trademark Office Interpretation of 35 U.S.C. 154(b)(2)(A)*, the Office has consistently taken the position that if an application is entitled to an adjustment under the three-year pendency provision of 35 U.S.C. 154(b)(1)(B), the entire period during which the application was pending before the Office (except for periods excluded under 35 U.S.C. 154(b)(1)(B)(i)-(iii)), and not just the period beginning three years after the actual filing date of the application, is the relevant period under 35 U.S.C. 154(b)(1)(B) in determining whether periods of delay "overlap" under 35 U.S.C. 154(b)(2)(A).

This interpretation is consistent with the statute. Taken together the statute and rule provide that to the extent that periods of delay attributable to grounds specified in 35 U.S.C. 154(b)(1) and in corresponding §1.702 overlap, the period of

adjustment granted shall not exceed the actual number of days the issuance of the patent was delayed.

In this instance, the relevant period under 35 U.S.C. 154(b)(1)(B) in determining whether periods of delay "overlap" under 35 U.S.C. 154(b)(2)(A) is the period during which the application was pending before the Office beginning on the application filing date under 35 U.S.C. 111(a), July 7, 2003, and ending on the date of filing of a request for continued examination (RCE), November 15, 2007 (not including any other periods excluded under 35 U.S.C. 154(b)(1)(B)(i)-(iii)). The relevant period ends with the filing of the RCE as the three-year time frame specified in 35 U.S.C. 154(b)(1)(B) does not include the period subsequent to the filing of the RCE. 35 U.S.C. 154(b)(1)(B)(i).

Pursuant to 35 U.S.C. 154(b)(1)(A) and 37 CFR 1.702(a)(1), 717 days of patent term adjustment were accorded during the pendency of the application for Office delay prior to the filing of the request for continued examination. There were no Office delays subsequent to the filing of the request for continued examination. Pursuant to 35 U.S.C. 154(b)(1)(B) and 37 CFR 1.702(b), 496 days of patent term adjustment accrued for Office issuance of the patent more than 3 years after the filing date of the application.

All of the 496 days of patent term adjustment under 37 CFR 1.702(b) overlap with the 717 days of patent term adjustment under 37 CFR 1.702(a)(1). Entry of both the 496 days and the 717 days is neither permitted nor warranted. 717 days is the actual number of days issuance of the patent was delayed.

Accordingly, at issuance, the Office properly entered 536 days of patent term adjustment, having considered the 496 days of Office delay under the three-year pendency provision.

CONCLUSION

In view thereof, the Office affirms that the revised determination of patent term adjustment at the time of the issuance of the patent is 536 days.

The Office acknowledges submission of the $200.00 fee set forth in 37 CFR 1.18(e). No additional fees are required.

Telephone inquiries specific to this matter should be directed to Senior Petitions Attorney Douglas I. Wood, at (571) 272-3231.

Nancy Johnson
Senior Petitions Attorney
Office of Petitions

UNITED STATES PATENT AND TRADEMARK OFFICE

Commissioner for Patents
United States Patent and Trademark Office
P.O. Box 1450
Alexandria, VA 22313-1450
www.uspto.gov

DR.MARK FRIEDMAN LTD.
C/O BILL POLKINGHORN
DISCOVERY DISPATCH
9003 FLORIN WAY
UPPER MARLBORO MD 20772

COPY MAILED

MAY 01 2008

OFFICE OF PETITIONS

In re Application of	:	
Michael ZUNKE et al.	:	
Application No. 10/612,921	:	DECISION ON PETITION
Filed: July 07, 2003	:	
Attorney Docket No. 2808/12	:	

This is a decision on the petition under 37 CFR 1.137(b), filed March 10, 2008, which is being treated as a petition under 37 CFR 1.181 (no fee) requesting withdrawal of the holding of abandonment in the above-identified application.

The petition is **GRANTED**.

Petitioner request the Notice of Abandonment mailed March 08, 2007 for failure to respond to the Office action mailed January 13, 2006 be withdrawn as petitioner timely filed a response. As evidenced by the e-filed acknowledgement receipt a RCE and fee was timely received July 13, 2006 by the USPTO. Accordingly, the notice of abandonment is withdrawn as premature.

Telephone inquiries concerning this decision should be directed to Michelle R. Eason at (571) 272-4231.

This application is being referred to the Technology Center Art Unit 3621 for the appropriate action on the RCE.

David A. Bucei
Petitions Examiner
Office of Petitions

UNITED STATES PATENT AND TRADEMARK OFFICE

Commissioner for Patents
United States Patent and Trademark Office
P.O. Box 1450
Alexandria, VA 22313-1450
www.uspto.gov

OBLON, SPIVAK, MCCLELAND,
MAIER & NEUSTADT, P.C.
1940 DUKE STREET
ALEXANDRIA, VA 22314

DEC 1 6 2008

In re Application of:
Kazuhiro Shitama, et al.
Serial No.: 10/612,927
Filed: July 7, 2003
Attorney Docket No.: 239814US6

DECISION ON PETITION
UNDER 37 C.F.R § 1.181

This is a decision on the petition filed on October 10, 2008 under 37 C.F.R. 181, requesting the consideration of the references cited in the Information Disclosure Statement (IDS) filed on September 26, 2007.

The request is GRANTED.

Petitioner asserts that the above-referenced application has been allowed, however, references AO to AT cited in the above-mentioned IDS were never acknowledged or made of record.

Since the above-mentioned IDS is in conformity with the requirements of 37 C.F.R. § 1.97-1.98, the application will be forwarded to the examiner for consideration of the cited references.

Any inquiry regarding this decision should be directed to Chau Nguyen, Workgroup Quality Assurance Specialist, at (571) 272-3126.

Valencia Martin-Wallace, Director
Technology Center 2400
Networks, Multiplex, Cables and Security

Best Available Copy

UNITED STATES PATENT AND TRADEMARK OFFICE

Commissioner for Patents
United States Patent and Trademark Office
P.O. Box 1450
Alexandria, VA 22313-1450
www.uspto.gov

COPY MAILED

MAY 24 2007

OFFICE OF PETITIONS

FOLEY AND LARDNER LLP
SUITE 500
3000 K STREET NW
WASHINGTON DC 20007

In re Application of	:	
Masanori Taketsugu	:	
Application No. 10/612,953	:	ON PETITION
Filed: July 7, 2003	:	
Attorney Docket No. 053969-0155	:	

This is a decision on the petition, filed May 22, 2007, under 37 CFR 1.313(c)(2) to withdraw the above-identified application from issue after payment of the issue fee.

The petition is **GRANTED.**

The above-identified application is withdrawn from issue for consideration of a submission under 37 CFR 1.114 (request for continued examination). See 37 CFR 1.313(c)(2).

Petitioner is advised that the issue fee paid on March 2, 2007 in the above-identified application cannot be refunded. If, however, the above-identified application is again allowed, petitioner may request that it be applied towards the issue fee required by the new Notice of Allowance.[1]

Telephone inquiries should be directed to the undersigned at (571) 272-3208.

The examiner of Technology Center AU 2618 will consider the request for continued examination under 37 CFR 1.114.

Karen Creasy

Karen Creasy
Petitions Examiner
Office of Petitions

---

[1] The request to apply the issue fee to the new Notice may be satisfied by completing and returning the new Issue Fee Transmittal Form PTOL-85(b), which includes the following language thereon: "Commissioner for Patents is requested to apply the Issue Fee and Publication Fee (if any) or re-apply any previously paid issue fee to the application identified above." Petitioner is advised that, whether a fee is indicated as being due or not, the Issue Fee Transmittal Form **must** be completed and timely submitted to avoid abandonment. Note the language in bold text on the first page of the Notice of Allowance and Fee(s) Due (PTOL-85).

UNITED STATES PATENT AND TRADEMARK OFFICE

UNITED STATES DEPARTMENT OF COMMERCE
United States Patent and Trademark Office
Address: COMMISSIONER FOR PATENTS
P.O. Box 1450
Alexandria, Virginia 22313-1450
www.uspto.gov

Zilka-Kotab, PC
P.O. BOX 721120
SAN JOSE, CA 95172-1120

Mail Date: 06/21/2010

Applicant	: Tommy Olaus Johnson	: DECISION ON REQUEST FOR
Patent Number	: 7640586	: RECALCULATION of PATENT
Issue Date	: 12/29/2009	: TERM ADJUSTMENT IN VIEW
Application No	: 10/612,996	: OF WYETH AND NOTICE OF INTENT TO
Filed	: 07/07/2003	: ISSUE CERTIFICATE OF CORRECTION
		:

The Request for Recalculation is **GRANTED** to the extent indicated.

The patent term adjustment has been determined to be **1123** days. The USPTO will *sua sponte* issue a certificate of correction reflecting the amount of PTA days determined by the recalculation.

Prior to the issuance of the certificate of correction, the USPTO will afford patentee an opportunity to be heard and request reconsideration. Accordingly, patentee has **one month or thirty (30) days**, whichever is longer, to file a request for reconsideration of this patent term adjustment calculation. See 35 U.S.C. 154(b)(3)(B)(ii) and 37 CFR 1.322(a)(4). No extensions of time will be granted under 37 CFR 1.136.

Patentee should use document code PET.OP if electronically filing a request for reconsideration of this patent term adjustment calculation. The patentee must also include the information required by 37 CFR 1.705(b)(2) and the fee required by 37 CFR 1.18(e). If patentee does not file a timely request for reconsideration of this patent term adjustment calculation including the information required by 37 CFR 1.705(b)(2) and the fee required by 37 CFR 1.18(e), the USPTO will issue a certificate of correction reflecting the PTA determination noted above.

Patentee should be aware that in order to preserve the right to review in the United States District Court for the District of Columbia of the USPTO patent term adjustment determination, patentee must ensure that he or she also take the steps required under 35 U.S.C. 154(b)(4)(A) in a timely manner. Nothing in the request for recalculation should be construed as providing an alternative time frame for commencing a civil action under 35 U.S.C. 154(b)(4)(A).

Any questions concerning this decision should be directed to the Office of Patent Legal Administration at 571-272-7702.

UNITED STATES PATENT AND TRADEMARK OFFICE

UNITED STATES DEPARTMENT OF COMMERCE
United States Patent and Trademark Office
Address: COMMISSIONER FOR PATENTS
P.O. Box 1450
Alexandria, Virginia 22313-1450
www.uspto.gov

CAPITOL PATENT & TRADEMARK LAW FIRM, PLLC
P.O. BOX 1995
VIENNA, VA 22183

Mail Date: 04/21/2010

Applicant	: Feihong Chen	: DECISION ON REQUEST FOR
Patent Number	: 7596140	: RECALCULATION of PATENT
Issue Date	: 09/29/2009	: TERM ADJUSTMENT IN VIEW
Appliction No	: 10/613,104	: OF WYETH AND NOTICE OF INTENT TO
Filed	: 07/07/2003	: ISSUE CERTIFICATE OF CORRECTION
		:

The Request for Recalculation is **GRANTED** to the extent indicated.

The patent term adjustment has been determined to be **1834** days. The USPTO will *sua sponte* issue a certificate of correction reflecting the amount of PTA days determined by the recalculation.

Prior to the issuance of the certificate of correction, the USPTO will afford patentee an opportunity to be heard and request reconsideration. Accordingly, patentee has **one month or thirty (30) days**, whichever is longer, to file a request for reconsideration of this patent term adjustment calculation. See 35 U.S.C. 154(b)(3)(B)(ii) and 37 CFR 1.322(a)(4). No extensions of time will be granted under 37 CFR 1.136.

Patentee should use document code PET.OP if electronically filing a request for reconsideration of this patent term adjustment calculation. The patentee must also include the information required by 37 CFR 1.705(b)(2) and the fee required by 37 CFR 1.18(e). If patentee does not file a timely request for reconsideration of this patent term adjustment calculation including the information required by 37 CFR 1.705(b)(2) and the fee required by 37 CFR 1.18(e), the USPTO will issue a certificate of correction reflecting the PTA determination noted above.

Patentee should be aware that in order to preserve the right to review in the United States District Court for the District of Columbia of the USPTO patent term adjustment determination, patentee must ensure that he or she also take the steps required under 35 U.S.C. 154(b)(4)(A) in a timely manner. Nothing in the request for recalculation should be construed as providing an alternative time frame for commencing a civil action under 35 U.S.C. 154(b)(4)(A).

Any questions concerning this decision should be directed to the Office of Patent Legal Administration at 571-272-7702.

UNITED STATES PATENT AND TRADEMARK OFFICE

Commissioner for Patents
United States Patent and Trademark Office
P.O. Box 1450
Alexandria, VA 22313-1450
www.uspto.gov

BIRCH STEWART KOLASCH & BIRCH
PO BOX 747
FALLS CHURCH, VA 22040-0747

MAILED

FEB 23 2010

OFFICE OF PETITIONS

In re Patent No. **7,559,898**	:	
Issue Date: July 14, 2009	:	
Application No. 10/613,112	:	NOTICE UNDER 37 CFR 1.28(C)
Filed: July 7, 2003	:	
Attorney Docket No. **1617-0104P**	:	

This is a notice regarding your request for acceptance of a fee deficiency submission under 37 CFR 1.28. On September 1, 1998, the Court of Appeals for the Federal Circuit held that 37 CFR 1.28(c) is the sole provision governing the time for correction of the erroneous payment of the issue fee as a small entity. **See DH Technology v. Synergystex International, Inc. 154 F.3d 1333, 47 USPQ2d 1865 (Fed. Cir. Sept. 1, 1998).**

The Office no longer investigates or rejects original or reissue applications under 37 CFR 1.56. **1098 Off. Gaz. Pat. Office 502 (January 3, 1989).** Therefore, nothing in this Notice is intended to imply that an investigation was done.

Your fee deficiency submission under 37 CFR 1.28 is hereby **ACCEPTED**.

This application is no longer entitled to small entity status. Accordingly, all future fees paid in this application must be paid at the large entity rate.

Telephone inquiries concerning this decision should be directed to the undersigned at (571) 272-7253.

/Monica A. Graves/
Petitions Examiner, Office of Petitions

UNITED STATES PATENT AND TRADEMARK OFFICE

COMMISSIONER FOR PATENTS
UNITED STATES PATENT AND TRADEMARK OFFICE
P.O. BOX 1450
ALEXANDRIA, VA 22313-1450
www.uspto.gov

FENWICK & WEST LLP
SILICON VALLEY CENTER
801 CALIFORNIA STREET
MOUNTAIN VIEW CA 94041

COPY MAILED

MAR 3 0 2004

OFFICE OF PETITIONS

In re Application of Goswami Application No. 10/613,116 Filed: July 3, 2003 Attorney Docket No.23085-08025 For: KINEMATIC QUANTIFICATION OF GAIT ASYMMETRY BASED ON BILATERAL CYCLOGRAMS	DECISION ON PETITION

This is a decision on the petition under 37 CFR 1.53(e), filed December 23, 2003, requesting that Figure 6 be accorded a filing date of July 3, 2003.

The application was filed on July 3, 2003. On December 4, 2003, the Office of Initial Patent Examination mailed a "Notice of Omitted Item(s) in a Nonprovisional Application" (Notice) informing petitioner that Figure 6, as described in the specification, appeared to have been omitted.

Petitioner requests that Figure 6 be accorded a filing date of July 3, 2003 on the basis that 23 sheets of formal drawing figures, including Figure 6, were received in the Patent and Trademark Office (PTO) on July 3, 2003. In support, the instant petition is accompanied by a copy of applicant's itemized postcard receipt showing an Office of Initial Patent Examination generated barcode citing July 3, 2003 as the date of receipt. The postcard lists, *inter alia*, that the filing included 23 sheets of formal drawings.

The return postcard constitutes *prima facie* evidence that 23 sheets of formal drawing figures were filed on July 3, 2003. MPEP 503. A review of the application file reveals that there are 22 sheets of drawing figures present. The missing sheet of drawings corresponds to that which would have contained Figure 6.

Accordingly, the petition under 37 CFR 1.53(e) is **GRANTED**. Pursuant to petitioner's authorization, the petition fee will be refunded by way of a treasury check that will be scheduled shortly.

The application is being returned to Office of Initial Patent Examination for further processing,

with a filing date of **July 3, 2003**, using the copy of Figure 6 submitted with the instant petition. Office records will be corrected to show that 23 sheets of drawings were present on initial filing.

Any inquiries pertaining to this matter may be directed to the undersigned at (703) 308-6712.

E. Shirene Willis

E. Shirene Willis
Senior Petitions Attorney
Office of Petitions

UNITED STATES PATENT AND TRADEMARK OFFICE

Commissioner for Patents
United States Patent and Trademark Office
P.O. Box 1450
Alexandria, VA 22313-1450
www.uspto.gov

LEE & MORSE, P.C.
3141 FAIRVIEW PARK DRIVE
SUITE 500
FALLS CHURCH VA 22042

MAILED

NOV 10 2009

OFFICE OF PETITIONS

In re Application of	:	
Kyung-Hun Jang, et al.	:	
Application No. 10/613,125	:	DECISION GRANTING PETITION
Filed: December 17, 2007	:	UNDER 37 CFR 1.313(c)(2)
Attorney Docket No. 249/387	:	

This is a decision on the petition under 37 CFR 1.313(c)(2), filed, November 10, 2009 to withdraw the above-identified application from issue after payment of the issue fee.

The petition is **GRANTED**.

The above-identified application is withdrawn from issue for consideration of a submission under 37 CFR 1.114 (request for continued examination). *See* 37 CFR 1.313(c)(2).

Petitioner is advised that the issue fee paid on October 13, 2009 cannot be refunded. If, however, this application is again allowed, petitioner may request that it be applied towards the issue fee required by the new Notice of Allowance.[1]

Telephone inquiries should be directed to Terri Johnson at (571) 272-2991.

This application is being referred to Technology Center AU 2435 for processing of the request for continued examination under 37 CFR 1.114 and for consideration of the concurrently filed .

Terri Johnson

Terri Johnson
Petitions Examiner
Office of Petitions

---

[1] *The request to apply the issue fee to the new Notice may be satisfied by completing and returning the new Part B – Fee(s) Transmittal Form (along with any balance due at the time of submission). Petitioner is advised that the Issue Fee Transmittal Form* ***must*** *be completed and timely submitted to avoid abandonment of the application.*

UNITED STATES PATENT AND TRADEMARK OFFICE

Commissioner for Patents
United States Patent and Trademark Office
P.O. Box 1450
Alexandria, VA 22313-1450
www.uspto.gov
DIW May-08

LEON D. ROSEN
FREILICH, HORNBAKER & ROSEN
SUITE 1220
10960 WILSHIRE BLVD.
LOS ANGELES CA 90024

COPY MAILED
MAY 16 2008
OFFICE OF PETITIONS

In re Application of	:	
Kim et al.	:	
Application Number: 10/613199	:	ON PETITION
Filing Date: 07/03/2003	:	
Attorney Docket Number: 03/139	:	

This is a decision on the petition under 37 CFR 1.137(a), filed on April 16, 2008, which is treated, in the alternative, under the unintentional provisions of 37 CFR 1.137(b).

The petition under 37 CFR 1.137(a) is **DISMISSED**.

The petition under 37 CFR 1.137(b) is **GRANTED**.

The application became abandoned on June 16, 2007, for failure to timely a reply to the Notification of Non-Compliant Appeal Brief (37 CFR 41.37) mailed on May 15, 2007, which set a one (1) month shortened period for reply. No extensions of the time for reply in accordance with 37 CFR 1.136(a) were obtained. Notice of Abandonment was mailed on April 10, 2008.

A grantable petition under 37 CFR 1.137(a) must be accompanied by:

(1) the required reply, unless previously filed; In a nonprovisional application abandoned for failure to prosecute, the required reply may be met by the filing of a continuing application. In a nonprovisional utility or plant application filed on or after June 8, 1995, and abandoned for failure to prosecute, the required reply may also be met by the filing of a request for continued examination in compliance with § 1.114. In an application or patent, abandoned or lapsed for failure to pay the issue fee or any portion thereof, the required reply must be the payment of the issue fee or any outstanding balance thereof. In an application, abandoned for failure to pay the publication fee, the required reply must include payment of the publication fee.

(2) the petition fee as set forth in 37 CFR 1.17(l);

(3) a showing to the satisfaction of the Director that the entire delay in filing the required reply from the due date for the reply until the filing of a grantable petition pursuant to 37 CFR 1.137(a) was unavoidable; and

(4) any terminal disclaimer (and fee as set forth in 37 CFR 1.20(d)) required pursuant to 37 CFR 1.137(c)).

The petition lacks item (3), above.

As to item (3), the Director may revive an abandoned application if the delay in responding to the relevant outstanding Office requirement is shown to the satisfaction of the Director to be "unavoidable".[1] Decisions on reviving abandoned applications on the basis of "unavoidable" delay have adopted the reasonably prudent person standard in determining if the delay was unavoidable:

> The word 'unavoidable' . . . is applicable to ordinary human affairs, and requires no more or greater care or diligence than is generally used and observed by prudent and careful men in relation to their most important business. It permits them in the exercise of this care to rely upon the ordinary and trustworthy agencies of mail and telegraph, worthy and reliable employees, and such other means and instrumentalities as are usually employed in such important business. If unexpectedly, or through the unforeseen fault or imperfection of these agencies and instrumentalities, there occurs a failure, it may properly be said to be

[1] 35 U.S.C. § 133.

> unavoidable, all other conditions of promptness in its rectification being present.[2]

The showing of record is inadequate to establish unavoidable delay within the meaning of 35 U.S.C. § 133 and 37 CFR 1.137(a).[3] Specifically, an application is "unavoidably" abandoned only where petitioner, or counsel for petitioner, takes all action necessary for a proper response to the outstanding Office action, but through the intervention of unforeseen circumstances, such as failure of mail, telegraph, facsimile, or the negligence of otherwise reliable employees, the response is not timely received in the Office.[4]

Petitioner asserts that a response to the Notification of Non-Compliant Appeal Brief (37 CFR 41.37) mailed on May 15, 2007 was timely filed, along with a return receipt postcard, but that the return receipt postcard was never stamped by the USPTO and returned.

A copy of the reply to the Notification of Non-Compliant Appeal Brief (37 CFR 41.37) mailed on May 15, 2007 is included with the subject petition.

While it is unfortunate if petitioner did not receive the return postcard stamped with the Office receipt date, the showing of record does not rise to the level of unavoidable delay because the showing of record is that petitioners did not avail themselves of the procedures set forth at 37 CFR 1.8 and 1.10 in that petitioners did not file the reply by first-class mail or "Express Mail Post Office to Addressee Service" with the United States Postal Service (USPS).

In this regard, although petitioner states in the petition that "[a]pplicant mailed the Reply with the certificate of mailing on time," no certificate of mailing in accordance with 37 CFR 1.8 or 1.10 is located on the copy of the reply to the Notification of

---

[2] In re Mattullath, 38 App. D.C. 497, 514-15 (1912)(quoting Ex parte Pratt, 1887 Dec. Comm'r Pat. 31, 32-33 (1887)); see also Winkler v. Ladd, 221 F. Supp. 550, 552, 138 USPQ 666, 167-68 (D.D.C. 1963), aff'd, 143 USPQ 172 (D.C. Cir. 1963); Ex parte Henrich, 1913 Dec. Comm'r Pat. 139, 141 (1913). In addition, decisions on revival are made on a "case-by-case basis, taking all the facts and circumstances into account." Smith v. Mossinghoff, 671 F.2d 533, 538, 213 USPQ 977, 982 (D.C. Cir. 1982). Finally, a petition cannot be granted where a petitioner has failed to meet his or her burden of establishing that the delay was "unavoidable." Haines v. Quigg, 673 F. Supp. 314, 316-17, 5 USPQ2d 1130, 1131-32 (N.D. Ind. 1987).

[3] See MPEP 711(c)(III)(C)(2) for a discussion of the requirements for a showing of unavoidable delay.

[4] Ex parte Pratt, 1887 Dec. Comm'r Pat. 31 (Comm'r Pat. 1887).

Non-Complaint Appeal Brief mailed on May 15, 2007. The showing of record, therefore, is that petitioner did not file the reply in accordance with 37 CFR 1.8 or 1.10.

Petitioner's failure to file the reply at issue in compliance with 37 CFR 1.8 or 1.10 precludes a finding that the delay was unavoidable. A "reasonably prudent person" would file papers or fees in compliance with 37 CFR 1.8 or 1.10 to ensure their timely filing in the USPTO, as well as preserve adequate evidence of such filing, a delay caused by an applicant's failure to file papers or fees in compliance with 37 CFR 1.8 and 1.10 does not constitute "unavoidable" delay.[5]

As the showing of record does not rise to the level of unavoidable delay, the petition under 37 CFR 1.137(a) is **dismissed**.

PETITION UNDER 37 CFR 1.137(b)

It is noted that petitioner states:

> If the US Patent Office finds that the above grounds do not support a petition to revive on the grounds of unavoidability then petitioner requests that the abandonment be found to be unintentionable (*sic*).

As it is clear that petitioner is requesting treatment in the alternative under the unintentional provisions of 37 CFR 1.137(b), despite the miscaptioning of the word "unintentional," the petition will be treated in the alternative under the unintentional provisions of 37 CFR 1.137(b). Petitioner **must** inform the Office if this is an incorrect interpretation.

The petition is **granted**.

The statement contained in the instant petition does not set forth that the entire delay from the due date of the required reply to the date of the filing of a grantable petition was unintentional as required by 37 CFR 1.137(b)(3). However, the statement contained in the instant petition is being so construed. Petitioner **must** notify the Office if this is not a correct interpretation.

---

[5] See Krahn v. Comm'r, 15 USPQ2d 1823, 1825 (E.D. Va. 1990); see also, MPEP 711.03(c)(III)(C)(2).

The petition fee of $1,540.00 is being charged to counsel's deposit account as authorized in the letter filed with the petition on April 16, 2008.

Receipt of the "Summary of Claimed Subject Matter 37 CFR 41.37(c)(1)(v)" filed as the required reply, is acknowledged.

The application is referred to Technology Center Art Unit 2832 for further processing.

Telephone inquiries concerning this matter may be directed to the undersigned at (571)272-3231.

Douglas I. Wood
Senior Petitions Attorney
Office of Petitions

UNITED STATES PATENT AND TRADEMARK OFFICE

Commissioner for Patents
United States Patent and Trademark Office
P.O. Box 1450
Alexandria, VA 22313-1450
www.uspto.gov

ERIC M. SMITH
WALL MARJAMA & BILINSKI LLP
101 SOUTH SALINA STREET
SUITE 400
SYRACUSE, NY 13202

COPY MAILED
JUL 12 2006
OFFICE OF PETITIONS

In re Application of :
Charles P. Barber et al :
Application No. 10/613,208 : ON PETITION
Filed: July 3, 2003 :
Attorney Docket No. 283-263 CON

This is a decision on the petition filed, July 7, 2006 under 37 CFR 1.313(c)(2) to withdraw the above-identified application from issue after payment of the issue fee.

The petition is **GRANTED**.

The above-identified application is withdrawn from issue for consideration of a submission under 37 CFR 1.114 (request for continued examination). See 37 CFR 1.313(c)(2).

Petitioner is advised that the issue fee paid on April 17, 2006 in the above-identified application cannot be refunded. If, however, the above-identified application is again allowed, petitioner may request that it be applied towards the issue fee required by the new Notice of Allowance.[1]

Telephone inquiries should be directed to Irvin Dingle at (571) 272-3210.

This matter is being referred to Technology Center AU 2876 for processing of the request for continued examination under 37 CFR 1.114 and for consideration of the concurrently filed amendment.

Irvin Dingle
Petitions Examiner
Office of Petitions

---

[1] The request to apply the issue fee to the new Notice may be satisfied by completing and returning the new Issue Fee Transmittal Form PTOL-85(b), which includes the following language thereon: Commissioner for Patents is requested to apply the Issue Fee and Publication Fee (if any) or re-apply any previously paid issue fee to the application identified above. Petitioner is advised that, whether a fee is indicated as being due or not, the Issue Fee Transmittal Form **must** be completed and timely submitted to avoid abandonment. Note the language in bold text on the first page of the Notice of Allowance and Fee(s) Due (PTOL-85).

UNITED STATES PATENT AND TRADEMARK OFFICE

Commissioner for Patents
United States Patent and Trademark Office
P.O. Box 1450
Alexandria, VA 22313-1450
www.uspto.gov

BROWDY AND NEIMARK, P.L.L.C.
624 NINTH STREET, NW
SUITE 300
WASHINGTON DC 20001-5303

OCT 19 2007

In re Application of
Christoffer Bro et al
Serial No.: 10/613,219
Filed: July 7, 2003
Attorney Docket No.: BRO-1

: PETITION DECISION

This is in response to the petition under 37 CFR 1.181, filed June 27, 2007, requesting withdrawal of the Finality of the Office action mailed February 27, 2007.

BACKGROUND

A review of the relevant file history shows that the examiner mailed a non-Final Office action to applicants on May 22, 2006, addressing claims 1-6 and 8-12. (In response to a previous Office action applicants had amended claim 1 and canceled claim 7.) The examiner rejected claims 1, 4 and 9-11 under 35 U.S.C. 112, second paragraph as indefinite for various reasons and noted that this was a new rejection not necessitated by applicants' amendments. Claims 1-6 and 8-12 were rejected under 35 U.S.C. 112, first paragraph as (1) lacking written description, and (2) enablement, in the specification and noted that these were also new rejections not necessitated by applicants' amendments. Claims 1-6 and 8-12 were also rejected under 35 U.S.C. 102(e) as anticipated by Weinstock et al.

Applicants replied on November 22, 2006, amending claims 1-2, 4-6, and 8-12, canceling claim 3, and adding claims 13-25. Applicants replied to all of the grounds of rejection asserted.

The examiner mailed a Final Office action to applicants on February 27, 2007. The examiner set forth a restriction requirement between claims 1-2,4-6 and 8-14, as directed to the elected invention as elected by original presentation and claims 15-25, directed to a different invention and proceeded to examine again claim 1-2, 4-6 and 8-14. The potential for rejoinder of the withdrawn claims was noted. Claims 1-2, 4-6 and 8-14 were again rejected under 35 U.S.C. 112, first paragraph as lacking written description, and as lacking enablement in the specification. The examiner responded to applicants' arguments as to these rejections and withdrew the other rejections of record.

Applicants filed this petition on June 27, 2007, objecting to the finality of the Office action as premature. Applicants also filed a reply to the Final Office action concurrently and have since filed a Notice of Appeal on August 27, 2007. The amendment has not been considered by the examiner pending decision on this petition.

DISCUSSION

Applicants request withdrawal of the finality of the Office action of February 27, 2007, on the basis that the examiner for the first time argues that a mere mutant of the enzyme PGM2 lacks written description and enablement as opposed to previous arguments which were directed to coverage of non-PGM2 enzymes.

Applicants note that the original claims were directed to enzymes having a particular property and included the PGM2 enzyme as well as others. The May 22, 2006, Office action, as noted by applicants, includes a statement/argument by the examiner that "The results are not necessarily predictive of any other enzyme, wild or mutant, capable of catalyzing the conversion." (Other than the non-wild type PGM2 enzyme which was shown to catalyze the conversion.) Applicants interpret this as being directed to any wild type or mutant enzyme other than PGM2, either wild type or mutant or non-wild type. However, the argument can also be interpreted as being inclusive of wild type and mutant PGM2 enzymes. Applicants then note that the claims were limited to the PGM2 enzyme by incorporating claim 3 into claim 1 in response to this argument.

Applicants argue that since claim 3 already limited the enzyme to PGM2, the question of written description and enablement were before the examiner prior to the last Office action and that the examiner's maintaining the rejections under 35 U.S.C. 112, first paragraph, for lack of written description and enablement and making the action Final was in error.

As noted above, the examiner's argument/statement, as quoted by applicants from the May 22, 2006, Office action, covers both wild type and mutant types of enzymes, including PGM2. It does not exclude all PGM2 enzymes, but makes it clear that only the non-wild type PGM2 enzyme is clearly supported under 35 U.S.C. 112, first paragraph, in the specification.

DECISION

The petition is **DENIED.**

The application will be forwarded to the examiner for consideration of applicants' reply to the Final Office action filed June 27, 2007.

The time for filing an Appeal Brief or taking other appropriate action in response to the Notice of Appeal filed August 27, 2007, continues to run from that date and may be extended under 37 CFR 1.136(a).

Should there be any questions about this decision please contact William R. Dixon, Jr., by letter addressed to Director, TC 1600, at the address listed above, or by telephone at 571-272-0519 or by facsimile sent to the general Office facsimile number 571-273-8300.

Christopher Low
Acting Director, Technology Center 1600

UNITED STATES PATENT AND TRADEMARK OFFICE

Commissioner for Patents
United States Patent and Trademark Office
P.O. Box 1450
Alexandria, VA 22313-1450
www.uspto.gov

MAILED

JUL 20 2009

OFFICE OF PETITIONS

WOLF GREENFIELD & SACKS, P.C.
600 ATLANTIC AVENUE
BOSTON MA 02210-2206

In re Application of	:	
Arthur Kreig	:	ON APPLICATION FOR
Application No. 10/613,228	:	PATENT TERM ADJUSTMENT
Filed: July 3, 2003	:	
Attorney Docket No.	:	
C1037.70045US00		

This is in response to the APPLICATION FOR PATENT TERM ADJUSTMENT RECONSIDERATION UNDER 37 C.F.R. § 1.705(B) filed May 27, 2009. Applicant requests that the determination of patent term adjustment be corrected from zero (0) days to eight hundred sixty three (863) days. Applicant requests this correction solely on the basis that the Office will take in excess of three years to issue this patent.

As the instant application for patent term adjustment requests reconsideration of the patent term adjustment as it relates to the Office's failure to issue the patent within 3 years of the filing date, the application for patent term adjustment under 37 CFR 1.705(b) is **DISMISSED as PREMATURE**.

Knowledge of the actual date the patent issues is required to calculate the amount, if any, of additional patent term patentee is entitled to for Office failure to issue the patent within 3 years. See § 1.702(b). (This is true even where a request for continued examination (RCE) was filed). The computer will not undertake the § 1.702(b) calculation until the actual date of issuance of the patent has been determined. Likewise, the computer will not calculate any further Office delay under § 1.702(a)(4) or applicant delay under § 1.704(c)(10) until the actual date of issuance of the patent has been determined. As such, the Office can not make a determination on the correctness of the patent term adjustment until the patent has issued.

Requesting reconsideration of the patent term adjustment to be indicated on the patent under 37 CFR 1.705(b) based on the initial determination of patent term adjustment and a projected issuance date of the patent (or even the filing date of the

request for continued examination) is premature. Accordingly, it is appropriate to dismiss as premature such a request.

Rather than file an application for patent term adjustment under 37 CFR 1.705(b) contesting the 37 CFR 1.702(b) calculation at the time of the mailing of the notice of allowance, applicant is advised that they may wait until the time of the issuance of the patent and file a request for reconsideration of the patent term adjustment pursuant to 37 CFR 1.705(d). As the USPTO does not calculate the amount of time earned pursuant to 37 CFR 1.702(b) until the time of the issuance of the patent, the Office will consider any request for reconsideration of the patent term adjustment due to an error in the calculation of 37 CFR 1.702(b) to be timely if the request for reconsideration is filed within two months of the issuance of the patent. However, as to all other bases for contesting the initial determination of patent term adjustment received with the notice of allowance, applicant must timely file an application for patent term adjustment prior to the payment of the issue fee[1].

The Office acknowledges submission of the $200.00 fee set forth in 37 CFR 1.18(e) for consideration of the application for patent term adjustment under 37 CFR 1.705(b).

Any request for reconsideration of the patent term adjustment indicated on the patent must be timely filed within 2 months after issuance pursuant to 37 CFR 1.705(d) and must include payment of the required fee under 37 CFR 1.18(e).

---

[1] For example, if applicant disputes both the calculation of patent term adjustment under 37 CFR 1.702(a)(1) for Office failure to mail a first Office action or notice of allowance not later than fourteen months after the date on which the application was filed and under 37 CFR 1.702(b) for Office failure to issue a patent within three years of the actual filing date of the application, then applicant must still timely file an application for patent term adjustment prior to the payment of the issue fee to contest the calculation of Office delay in issuing a first Office action or notice of allowance. See 37 CFR 1.705(b) and 35 U.S.C. 154(b)(3)(B). A dispute as to the calculation of the §1.702(a)(1) period raised on request for reconsideration of patent term adjustment under 37 CFR 1.705(d) will be dismissed as untimely filed.

The Office of Data Management has been advised of this decision. This application is being referred to the Office of Data Management for issuance of the patent.

Telephone inquiries specific to this decision should be directed to Petitions Attorney Charlema Grant at (571) 272-3215.

Kery Fries
Senior Legal Advisor Attorney
Office of Patent Legal Administration

Docket No.: C1037.70045US00
(PATENT)

IN THE UNITED STATES PATENT AND TRADEMARK OFFICE

Applicant:	Arthur M. Krieg
Serial No.:	10/613,228
Confirmation No.:	4680
Filed:	July 3, 2003
For:	NUCLEIC ACID COMPOSITIONS FOR STIMULATING IMMUNE RESPONSES
Examiner:	N. M. Minnifield
Art Unit:	1645

Certificate of Electronic Filing Under 37 CFR 1.8
I hereby certify that this paper (along with any paper referred to as being attached or enclosed) is being transmitted via the Office electronic filing system in accordance with § 1.6(a)(4).

Dated: May 27, 2009 Signature: (Nicole Millette Lapomardo)

COMMISSIONER FOR PATENTS
P.O. Box 1450
Alexandria, VA 22313-1450

APPLICATION FOR PATENT TERM ADJUSTMENT UNDER 37 CFR §1.705

Dear Madam:

In accordance with 37 CFR §1.705(b), Applicant requests reconsideration of the patent term adjustment ("PTA") for U.S. Application No. 10/613,228 ("the '228 Application"). Applicant provides, below, a statement of the facts involved, specifying the correct PTA and the bases under 37 CFR §1.702 for the adjustment, the relevant dates for which adjustment is sought, and the adjustment to which the patent is entitled.

1. On 02/27/2009, the U.S. Patent and Trademark Office ("USPTO") mailed a Notice of Allowance and Determination of Patent Term Adjustment (Exhibit 1) for U.S. Application No. 10/613,228, which indicated that the '228 Application was entitled to a PTA of 0 days.

2. According to the Patent Term Adjustments page (Exhibit 2) of the Patent Application Information Retrieval (PAIR) system, the USPTO accorded the '228 Application a PTA of 110 days for delays that occurred at the USPTO, but reduced the PTA to 0 days because Applicant had allegedly incurred 385 days of delay.

3. Applicant submits that the correct PTA should be 863 days, which is the net USPTO delay of 1248 days minus the apparent net Applicant delay of 385 days.

4. The difference between what Applicant submits is the correct PTA (863 days) and what the Notice of Allowance and Determination of Patent Term Adjustment states is the PTA (0 days) results from the USPTO's failure to issue the '228 Application within three years of its actual filing date, i.e. by 07/03/2006. *See* 35 U.S.C. § 154(b)(1)(B). The USPTO has not included this delay in its calculation of the PTA shown in the PAIR system.

5. Although the issue date of the '228 Application is unknown, the Notice of Allowance and Determination of Patent Term Adjustment assumes that the patent will issue on 09/08/2009, which is the Tuesday before the date that is 28 weeks (six and a half months) after the mailing date of the Notice. The period of delay thus began on the first day following the end of the three-year period (07/04/2006), will conclude on the assumed issue date of 09/08/2009, and results in a USPTO delay of 1163 days.

6. The net USPTO delay of 1248 days is the sum of the delay for failure to issue the '228 Application within the 3-year period (1163 days) and the USPTO delay periods shown in PAIR (110 days) minus the number of days these periods overlap on the calendar (25 days). *See Wyeth v. Dudas*, 580 F. Supp. 2d at 138, 141 (D.D.C. 2008) (holding that the "only way that periods of time can 'overlap' is if they occur on the same day"). The periods of overlap occurred from 02/28/2007 through 03/21/2007 (22 days) and from 08/18/2008 through 08/20/2008 (3 days).

7. A terminal disclaimer was not filed in this case and the '228 Application is not subject to a terminal disclaimer.

Conclusion

Based on the foregoing, Applicant respectfully submits that the correct PTA should be 863 days and not 0 days as listed in the Notice of Allowance and Determination of Patent Term Adjustment. The 863 days of PTA results from the USPTO's failure to issue the '228 Application within 3 years of its filing date.

Applicant submits $200.00, which is the fee set forth in 37 CFR § 1.18(e) for filing an application for PTA. If there is any additional fee occasioned by this application and request that is not covered by the enclosed fee, please charge any deficiency to Deposit Account No. 23/2825.

Respectfully submitted,

Maria A. Trevisan
Registration No. 48,207
WOLF, GREENFIELD & SACKS, P.C.
Federal Reserve Plaza
600 Atlantic Avenue
Boston, MA 02210-2206
617.646.8000

Date: May 27, 2009
x05.27.09

UNITED STATES PATENT AND TRADEMARK OFFICE

Commissioner for Patents
United States Patent and Trademark Office
P.O. Box 1450
Alexandria, VA 22313-1450
www.uspto.gov

In re Application of	: DECISION ON REQUEST
Wiliam G. SHERIDAN	: UNDER 37 CFR 1.97
Serial No: 10/613,233	: FOR CONSIDERATION
Filed: July 3, 2003	: OF INFORMATION
For: FAILURE TOLERANT PASSIVE	: DISCLOSURE STATEMENT
LUBRICATION SYSTEM	:

The request under 37 CFR 1.97(d) for consideration of an information disclosure statement filed on March 2, 2005 after allowance has been:

(X) GRANTED.

( ) DENIED.

The request lacks:

( ) The required fee under 37 CFR 1.97(d)(2) and 1.17(p).

( ) A proper certification as specified in 37 CFR 1.97(e)(1) or 1.97(e)(2). 37 CFR 1.97(e)(1) requires statement to include that each item of information contained in the IDS was **first** cited in **any** communication from a foreign patent office in a counterpart foreign application not more than three months prior to the filing of the IDS.

The information disclosure statement has been placed of record in the file and will be considered by the examiner. See Federal Register 65 Fed. Reg. 54603 (September 8, 2000); Official Gazette 1238 Off. Gaz. Pat Office 77 (September 19, 2000) for rule changes fo 37 CFR 1.97.

Richard Ridley, SPE
Art Unit 3682
(571) 272-6917

UNITED STATES PATENT AND TRADEMARK OFFICE

Commissioner for Patents
United States Patent and Trademark Office
P.O. Box 1450
Alexandria, VA 22313-1450
www.uspto.gov

DINSMORE & SHOHL, LLP
1900 CHEMED CENTER
255 EAST FIFTH STREET
CINCINNATI, OH 45202

COPY MAILED
DEC 0 7 2006
OFFICE OF PETITIONS

In re Application of	:	
MALONE	:	
Application No. 10/613,287	:	DECISION ON PETITION
Filed: July 03, 2003	:	TO WITHDRAW
Attorney Docket No: 30437-1	:	FROM RECORD
	:	

This is a decision on the Request to Withdraw as attorney or agent of record under 37 C.F.R. § 1.36(b), filed September 19, 2006.

The request is **APPROVED**.

A grantable request to withdraw as attorney/agent of record must be signed by every attorney/agent seeking to withdraw or contain a clear indication that one attorney is signing on behalf of another/others. A request to withdraw will not be approved unless at least 30 (thirty) days would remain between the date of approval and the later of the expiration date of a time to file a response or the expiration date of the maximum time period which can be extended under 37 C.F.R. § 1.136(a).

The request was signed by Geoffrey Luther Oberhaus on behalf of all attorneys of record who are associated with Customer No. 24256. All attorneys/agents associated with the Customer No. 24256 have been withdrawn.

Applicant is reminded that there is no attorney of record at this time.

The correspondence address of record has been changed, all future communications from the Office will be directed to the first named signing inventor at the address indicated below until otherwise properly notified by the applicant.

There is no outstanding Office action that requires a reply from the applicant.

Telephone inquiries concerning this decision should be directed to the undersigned at 571-272-6825.

Patricia Volpe
Petitions Examiner
Office of Petitions

cc: Larry Malone
11890 Metz Place
Eads, TN 38028

UNITED STATES PATENT AND TRADEMARK OFFICE

UNITED STATES DEPARTMENT OF COMMERCE
United States Patent and Trademark Office
Address: COMMISSIONER FOR PATENTS
P.O. Box 1450
Alexandria, Virginia 22313-1450
www.uspto.gov

APPLICATION NUMBER	FILING OR 371 (c) DATE	FIRST NAMED APPLICANT	ATTY. DOCKET NO./TITLE
10/613,287	07/03/2003	Larry Malone	30437-1

CONFIRMATION NO. 3967

OC000000021502518

24256
DINSMORE & SHOHL, LLP
1900 CHEMED CENTER
255 EAST FIFTH STREET
CINCINNATI, OH 45202

Date Mailed: 12/06/2006

NOTICE REGARDING CHANGE OF POWER OF ATTORNEY

This is in response to the Power of Attorney filed 09/19/2006.

- The withdrawal as attorney in this application has been accepted. Future correspondence will be mailed to the new address of record. 37 CFR 1.33.

PVolpe

PATRICIA A VOLPE
OP (571) 272-6825

FORMER ATTORNEY/AGENT COPY

UNITED STATES PATENT AND TRADEMARK OFFICE

Commissioner for Patents
United States Patent and Trademark Office
P.O. Box 1450
Alexandria, VA 22313-1450
www.uspto.gov

COPY MAILED

SEP 16 2009

OFFICE OF PETITIONS

Richard P. Komosky
12494 Colony Preserve Drive
Boynton Beach, FL 33436

In re Patent No. 6,895,958	:	
Issue Date: May 24, 2005	:	
Application No. 10/613,292	:	ON PETITION
Filed: July 3, 2003	:	
Attorney Docket No. 1352	:	

This is a decision on the petition under 37 CFR 1.378(c), filed July 20, 2009, to accept the unintentionally delayed payment of a maintenance fee for the above-identified patent.

The petition is **GRANTED**.

This patent expired on May 25, 2009, for failure to pay the three and one-half year maintenance fee. Since this petition was submitted within twenty-four months after the six-month grace period provided in 37 CFR 1.362(e), the petition was timely filed under the provisions of 37 CFR 1.378(c).

The maintenance fee is hereby accepted and the above-identified patent is reinstated as of the mail date of this decision.

Telephone inquiries concerning this decision should be directed to Kimberly Inabinet at (571) 272-4618.

The patent file is being forwarded to Files Repository.

Carl Friedman
Petitions Examiner
Office of Petitions

UNITED STATES PATENT AND TRADEMARK OFFICE

Commissioner for Patents
United States Patent and Trademark Office
P.O. Box 1450
Alexandria, VA 22313-1450
www.uspto.gov

Charles Y. Lackey
PO Box 5871
Winston-Salem, NC 27113-5871

COPY MAILED

MAR 2 1 2005

OFFICE OF PETITIONS

Decision on Petition

In re Application of
James L. Rapier III
Application No. 10/613,306
Filed: July 7, 2003
For: Waste Container with Hidden Slides

This is a decision on the petition under 37 CFR 1.137(a), filed November 19, 2004, to revive the above-identified application.

The petition is **DISMISSED**.

Petitioner contends the abandonment of the application was unavoidable because petitioner did not receive the Notice to File Corrected Application Papers mailed October 2, 2003.

The evidence submitted with the petition

The petition states,

> In the present application, both Petitioner's assistant and Petitioner reviewed the docket system papers (all 12 months) and the client's complete file when the Notice of Abandonment was received[, October 22, 2004]. No documents from the USPTO or other entities were found regarding this application except the return postcard stamped with the filing date and serial number.

The attorney's declaration states,

> Affiant and Affiant's assistant, Diane B. Smith, reviewed the docket records (all twelve months of files) and the file jacket, and no Office Action was found or indicated. Had such Office action been received, it would have been included in the docket system where it would have been seen and reviewed at least twice and included in the file jacket.

A copy of the docket log for the instant application has been submitted. The log indicates that no paper was received between the time the return postcard was received and the time the Notice of Abandonment was received. The docket log indicates that the attorney did not file any papers pertaining to this application after the filing date but before receipt of the Notice of Abandonment.

Facts:

A review of the file indicates a Notice To File Corrected Application Papers was mailed to petitioner on November 6, 2003.

The Notice was received. Petitioner filed a reply to the Notice on November 14, 2003. The reply identifies the application by application number, inventor, filing date, and title. The reply states, "In response to the Notice to File Corrected Application Papers in the above-referenced application mailed November 6, 2003, a copy of which is enclosed, corrected informal drawings for Figures 1a, 4a to 4c are enclosed." Petitioner filed a copy of the Notice to File Corrected Application Papers with the reply. The reply bears the attorney's signature.

Analysis:

Petitioner filed a timely reply to the Notice to File Corrected Application Papers and the Office of Initial Patent Examination has not mailed a Notice of Abandonment for *this* application. Therefore, the Office can not grant the petition since the application does not appear to be abandoned.

Since the application is not abandoned, the Office cannot withdraw the holding of abandonment due to non-receipt of the Notice to File Corrected Application Papers.

Application no. 10/613,308:

Petitioner notes the application number listed on the Notice of Abandonment is application no. 10/613,308 and not application no. 10/613,306. Petitioner notes the application number listed on the Notice to File Corrected Application Papers is application no. 10/613,308 and not application no. 10/613,306. However, petitioner states the application number on both Notices is incorrect.

The basis for petitioner's determination that the application number listed on the Notices is incorrect is unclear. Application no. 10/613,308 is an application filed by petitioner. The filing date and first named applicant listed on the Notices are also the filing date and first named applicant for application no. 10/613,308.

If petitioner wishes to revive application no. 10/613,308, then a petition must be filed for that application. As of December 8, 2003, the petition fee for a small entity under 37 CFR 1.137(a) is $250 and the petition fee under 37 CFR 1.137(b) is $750.

Further correspondence with respect to this matter should be addressed as follows:

By mail: Mail Stop Petition
Commissioner for Patents
P.O. Box 1450
Alexandria, VA 22313-1450

By facsimile: (703) 872-9306
Attn: Office of Petitions

If a request for reconsideration is filed, and a decision on the new petition is not received within three months, petitioner may wish to call the number below to check on the status of the renewed petition.

Telephone inquiries should be directed to Petitions Attorney Steven Brantley at (571) 272-3203.

Charles Steven Brantley
Petitions Attorney
Office of Petitions

Attached: Copy of Notice to File Corrected Application Papers for the instant application
Copy of first page of petitioner's reply filed on November 14, 2003

UNITED STATES PATENT AND TRADEMARK OFFICE

Commissioner for Patents
United States Patent and Trademark Office
P.O. Box 1450
Alexandria, VA 22313-1450
www.uspto.gov

JJGJR.: 06-05

Paper No: __

COPY MAILED

JUN 3 0 2005

OFFICE OF PETITIONS

CHARLES Y. LACKEY
PO BOX 5871
WINSTON-SALEM NC 27113-5871

In re Application of	:	
Rapier	:	
Application No. 10/613,306	:	DECISION ON PETITION
Filing Date: 7 July, 2003	:	
Attorney Docket No. (None)	:	

This is a decision on the petition filed on 30 August, 2004, alleging, *inter alia*, unavoidable delay under 37 C.F.R. §1.137(a), and in light of the allegations of non-receipt, considered as a request to withdraw the holding of abandonment under 37 C.F.R. §1.181.

For the reasons set forth below, the petition:

- under 37 C.F.R.§1.137(a) is **DISMISSED**; and
- as considered as a request to withdraw the holding of abandonment under 37 C.F.R. §1.181 is **DISMISSED**.

NOTES:

(1) There should be no need for further petition in this matter, however, to the extent that Petitioner finds need therefor, any petition (and fee) for reconsideration of this decision under 37 C.F.R. §1.137(a) (as to unavoidable delay) or an alternative

request for relief under 37 C.F.R. §1.137(b)[1] (as to unintentional delay) must be submitted within two (2) months from the mail date of this decision. Extensions of time under 37 C.F.R. §1.136(a) are permitted. The reconsideration request should include a cover letter entitled "Renewed Petition under 37 C.F.R. §1.137(a)"; and/or "Petition under 37 C.F.R. §1.137(b)";

(2) Thereafter, there will be no further reconsideration of this matter.

(3) It appears that Petitioner may not have updated his contact information (including telephone) with the Office of Enrollment and Discipline, and Petitioner is encouraged to correct this oversight without delay.

PLEASE TAKE SPECIAL NOTE:

Petitioner appears:

- to have filed two separate applications on the same date but on behalf of two different applicants, and which were assigned application numbers only two digits apart by the Office; and

- not to have designated docket numbers for the respective applications.

The Office mailed no Notice of Abandonment in the instant file, however, the Office did mail a Notice of Abandonment in the other file.

Nonetheless, Petitioner continues to file petitions to revive under 37 C.F.R. §1.137–alternatively pleaded to be considered as a request to withdraw the holding of abandonment under 37 C.F.R. §1.181–in the instant pending application, rather than the other application, which is abandoned.

Petitioner, as one registered to practice before the Office, is aware that under the provisions of 37 C.F.R. §1.4:

---

[1] Effective December 1, 1997, the provisions of 37 C.F.R. §1.137(b) now provide that where the delay in reply was unintentional, a petition may be filed to revive an abandoned application or a lapsed patent pursuant to 37 C.F.R. §1.137(b). a grantable petition filed under the provisions of 37 C.F.R. §1.137(b) must be accompanied by:

(1) the required reply, unless previously filed. In a nonprovisional application abandoned for failure to prosecute, the required reply may be met by the filing of a continuing application. In an application or patent, abandoned or lapsed for failure to pay the issue fee or any portion thereof, the required reply must be the payment of the issue fee or any outstanding balance thereof.

(2) the petition fee as set forth in 37 C.F.R. §1.17(m);

(3) a statement that the entire delay in filing the required reply from the due date for the reply until the filing of a grantable petition pursuant to 37 C.F.R. §1.137(b) was unintentional. The Commissioner may require additional information where there is a question whether the delay was unintentional; and

(4) any terminal disclaimer (and fee set forth in 37 C.F.R. §1.20(d)) required pursuant to 37 C.F.R. §1.137(c). (Emphasis supplied.)

* * *

> (b) Since each file must be complete in itself, a separate copy of every paper to be filed in a patent, patent file, or other proceeding must be furnished for each file to which the paper pertains, even though the contents of the papers filed in two or more files may be identical. The filing of duplicate copies of correspondence in the file of an application, patent, or other proceeding should be avoided, except in situations in which the Office requires the filing of duplicate copies. The Office may dispose of duplicate copies of correspondence in the file of an application, patent, or other proceeding.

* * *

Moreover:

* * *

> (c) Since different matters may be considered by different branches or sections of the United States Patent and Trademark Office, each distinct subject, inquiry or order must be contained in a separate paper to avoid confusion and delay in answering papers dealing with different subjects.

* * *

Petitioner must address the question of abandonment of the other application, as the rules require, in the other application.

BACKGROUND

The record reflects that:

- as noted above, Petitioner has twice filed a petition to revive in the instant application (Application No. 10/613,306 (the '306 application)) in an attempt to address an abandonment matter in an application that Petitioner apparently filed contemporaneously for another applicant and bearing a proximate but other application number (Application No. 10/316,308 (the '308 application);

- the Office mailed on 2 October, 2003, a Notice to File Corrected Application Papers (drawings) in the '308 application, with reply due on or before 2 December, 2003, and Petitioner has never replied to that Notice;

- the Office mailed on 6 November, 2003, a Notice to File Corrected Application Papers

(drawings) '306 application, with reply due on or before 6 January, 2004, and Petitioner replied to that Notice on 14 November, 2003;

- the Office mailed a Notice of Abandonment in the '308 application on 19 October, 2004, and thereafter Petitioner filed the original petition on 19 November, 2004–however, Petitioner filed the petition in the '306 application rather than the '308 application;

- when the original petition as lodged (incorrectly) by Petitioner in the '306 application was dismissed on 21 March, 2005, Petitioner reasserted/renewed the petition on 28 March, 2005–again in the instant (and incorrect) '306 application.

STATUTES, REGULATIONS AND ANALYSIS

Congress has authorized the Commissioner to "revive an application if the delay is shown to the satisfaction of the Commissioner to have been "unavoidable." 35 U.S.C. §133 (1994).[2]

The regulations at 37 C.F.R. §1.137(a) and (b) set forth the requirements for a petitioner to revive a previously unavoidably or unintentionally, respectively, abandoned application under this congressional grant of authority. The language of 35 U.S.C. §133 and 37 C.F.R. §1.137(a) is clear, unambiguous, and without qualification: the delay in tendering the reply to the outstanding Office action, as well as filing the first petition seeking revival, must have been unavoidable for the reply now to be accepted on petition.[3]

Delays in responding properly raise the question whether delays are unavoidable.[4] Where there is a question whether the delay was unavoidable, Petitioners must meet the burden of establishing that the delay was unavoidable within the meaning of 35 U.S.C. §133 and 37 C.F.R. §1.137(a).[5] And the Petitioner must be diligent in attending to the matter.[6] Failure to do so does not

---

[2] 35 U.S.C. §133 provides:
35 U.S.C. §133 Time for prosecuting application.
Upon failure of the applicant to prosecute the application within six months after any action therein, of which notice has been given or mailed to the applicant, or within such shorter time, not less than thirty days, as fixed by the Commissioner in such action, the application shall be regarded as abandoned by the parties thereto, unless it be shown to the satisfaction of the Commissioner that such delay was unavoidable.

[3] Therefore, by example, an unavoidable delay in the payment of the Filing Fee might occur if a reply is shipped by the US Postal Service, but due to catastrophic accident, the delivery is not made.

[4] See: *Changes to Patent Practice and Procedure*; *Final Rule Notice*, 62 *Fed. Reg.* at 53158-59 (October 10, 1997), 1203 *Off. Gaz. Pat. Office* at 86-87 (October 21, 1997).

[5] See: In re Application of G, 11 USPQ2d 1378, 1380 (Comm'r Pats. 1989).

[6] See: Diligence in Filing Petitions to Revive and Petitions to Withdraw the Holding of Abandonment, 1124 Off. Gaz. Pat. Office 33 (March 19, 1991). It was and is Petitioner's burden to exercise diligence in seeking either to have the holding of abandonment withdrawn or the application revived. See 1124 Off. Gaz. Pat. Office supra.

constitute the care required under Pratt, and so cannot satisfy the test for diligence and due care.

(By contrast, unintentional delays are those that do not satisfy the very strict statutory and regulatory requirements of unavoidable delay, and also, by definition, are not intentional.[7]))

The requirements for a grantable petition under 37 C.F.R. §1.137(a) are the petition and fee, a showing of unavoidable delay, a proper reply, and–where appropriate--a terminal disclaimer and fee if the application was filed before 8 June, 1995.

As discussed above, the Office does not appear to have declared the instant application abandoned, and therefore neither a petition to revive nor a request to withdraw the holding of abandonment is appropriate in the premises as to the instant application.

Should Petitioner wish to address an abandonment matter in another application, Petitioner must–as required by the rules of practice discussed above–file the appropriate papers in the other application. However, in the instant application there appears to be no matter in contest.

CONCLUSION

Accordingly, the petition:

- under 37 C.F.R.§1.137(a) is **dismissed as moot**; and
- as considered as a request to withdraw the holding of abandonment under 37 C.F.R. §1.181 is **dismissed as moot**.

There should be no need for further correspondence with respect to this matter, however, should for some reason Petitioner find the need therefor, further correspondence with respect to this matter should be addressed as follows:

By mail: (Effective 1 May, 2003)[8]
Commissioner for Patents
P.O. Box 1450
Alexandria, VA 22313-1450

---

[7] Therefore, by example, an unintentional delay in the reply might occur if the reply and transmittal form are to be prepared for shipment by the US Postal Service, but other pressing matters distract one's attention and the mail is not timely deposited for shipment.

[8] To determine the appropriate addresses for other subject-specific correspondence, refer to the USPTO Web site at www.uspto.gov.

By FAX: IFW Formal Filings
(703) 872-9306
(Effective 28 September, 2004: (571-273-0025)
ATTN.: Office of Petitions

By hand: Mail Stop: Petition
Customer Service Window
Lobby/Room 1B03
Crystal Plaza Two
220 20th Street S.
Arlington, VA 22202

The instant application is released to OIPE for further processing as necessary before being forwarded for examination in due course.

Telephone inquiries concerning this decision may be directed to the undersigned at (703) 305-9199.

John J. Gillon, Jr.
Senior Attorney
Office of Petitions

UNITED STATES PATENT AND TRADEMARK OFFICE

COMMISSIONER FOR PATENTS
UNITED STATES PATENT AND TRADEMARK OFFICE
P.O. BOX 1450
ALEXANDRIA, VA 22313-1450
www.uspto.gov

NIXON & VANDERHYE, PC
901 NORTH GLEBE ROAD, 11TH FLOOR
ARLINGTON, VA 22203

COPY MAILED

JUL 23 2008

OFFICE OF PETITIONS

In re Application of :
Myles C. S. Harrington, et al. :
Application No.: 10/613,319 : ON PETITION
Filed: July 7, 2003 :
Attorney Docket No.: 3594-14 :

This is a decision on the petition, filed July 21, 2008, under 37 CFR 1.313(c)(2) to withdraw the above-identified application from issue after payment of the issue fee.

The petition is **GRANTED**.

The above-identified application is withdrawn from issue for consideration of a submission under 37 CFR 1.114 (request for continued examination). See 37 CFR 1.313(c)(2).

Petitioner is advised that the issue fee paid on June 24, 2008, cannot be refunded. If, however, this application is again allowed, petitioner may request that it be applied towards the issue fee required by the new Notice of Allowance.[1]

Telephone inquiries relating to this decision should be directed to the undersigned at (571) 272-3204.

The application is being referred to Technology Center AU 3694 for further processing of the request for continued examination under 37 CFR 1.114 and for consideration of the concurrently filed Information Disclosure Statement (IDS).

Sherry D. Brinkley
Petitions Examiner
Office of Petitions

[1] *The request to apply the issue fee to the new Notice may be satisfied by completing and returning the new Part B - Fee(s) Transmittal Form (along with any balance due at the time of submission). Petitioner is advised that the Issue Fee Transmittal Form must be completed and timely submitted to avoid abandonment of the application.*

UNITED STATES PATENT AND TRADEMARK OFFICE

Commissioner for Patents
United States Patent and Trademark Office
P.O. Box 1450
Alexandria, VA 22313-1450
www.uspto.gov

BIELEN, LAMPE & THOEMING
1990 N. CALIFORNIA BOULEVARD
SUITE 720
WALNUT CREEK, CA 94596

COPY MAILED

DEC 2 0 2004

OFFICE OF PETITIONS

In re Application of :
Schafer et al :
Application No. 10/613,336 :
Filed: July 3, 2003 :
Attorney Docket No. 71195-01002 :

ON PETITION

This is a decision on the petition, filed December 9, 2004, under 37 CFR 1.313(c)(2) to withdraw the above-identified application from issue after payment of the issue fee.

The petition is **GRANTED**.

The above-identified application is withdrawn from issue for consideration of a submission under 37 CFR 1.114 (request for continued examination). See 37 CFR 1.313(c)(2).

Petitioner is advised that the issue fee paid on November 26, 2004 in the above-identified application cannot be refunded. If, however, the above-identified application is again allowed, petitioner may request that it be applied towards the issue fee required by the new Notice of Allowance.[1]

Telephone inquiries should be directed to the undersigned at (571) 272-3208.

The examiner of Technology Center AU 3661 will consider the request for continued examination under 37 CFR 1.114.

Karen Creasy

Karen Creasy
Petitions Examiner
Office of Petitions
Office of the Deputy Commissioner
for Patent Examination Policy

---

[1] The request to apply the issue fee to the new Notice may be satisfied by completing and returning the new Issue Fee Transmittal Form PTOL-85(b), which includes the following language thereon: "Commissioner for Patents is requested to apply the Issue Fee and Publication Fee (if any) or re-apply any previously paid issue fee to the application identified above." Petitioner is advised that, whether a fee is indicated as being due or not, the Issue Fee Transmittal Form **must** be completed and timely submitted to avoid abandonment. Note the language in bold text on the first page of the Notice of Allowance and Fee(s) Due (PTOL-85).

UNITED STATES PATENT AND TRADEMARK OFFICE

Commissioner for Patents
United States Patent and Trademark Office
P.O. Box 1450
Alexandria, VA 22313-1450
www.uspto.gov

JOHN F. HOFFMAN, ESQ.
BAKER & DANIELS LLP
SUITE 800
111 EAST WAYNE STREET
FORT WAYNE IN 46802

COPY MAILED

JAN 15 2008

OFFICE OF PETITIONS

In re Application of	:	
Gary Sederholm et al	:	
Application No. 10/613,348	:	DECISION GRANTING PETITION
Filed: July 3, 2003	:	UNDER 37 CFR 1.137(b)
Attorney Docket No. ZIM0363	:	

This is a decision on the petition under 37 CFR 1.137(b), filed June 25, 2007, to revive the above-identified application.

The petition is **GRANTED**.

The petition satisfies the conditions for revival pursuant to the provisions of 37 CFR 1.137(b) in that (1) the reply in the form of an amendment; (2) the petition fee; and (3) the required statement of unintentional delay have been received. Accordingly, the reply, is accepted as having been unintentionally delayed.

Telephone inquiries concerning this decision should be directed to the undersigned at (571) 272-3208.

This matter is being referred to Technology Center AU 3774.

Karen Creasy

Karen Creasy
Petitions Examiner
Office of Petitions

UNITED STATES PATENT AND TRADEMARK OFFICE

Commissioner for Patents
United States Patent and Trademark Office
P.O. Box 1450
Alexandria, VA 22313-1450
www.uspto.gov

COPY MAILED

SEP 1 5 2004

OFFICE OF PETITIONS

FISH & RICHARDSON P.C.
45 ROCKEFELLER PLAZA, SUITE 2800
NEW YORK, NY 10111

In re Application of :
Guillaume et al. :
Application No. 10/613,351 : ON PETITION
Deposited: July 3, 2003 :
Attorney Docket No.: 08291-710003 :

This is a decision on the petition filed October 20, 2003 under 37 CFR 1.181 (a)(2), requesting that the above-identified application be accorded a filing date of July 3, 2003.

The application was deposited on July 3, 2003, claiming status as a divisional of prior application No. 09/937,050. However, on September 29, 2003, the Office of Initial Patent Examination mailed a "Notice of Incomplete Nonprovisional Application" stating that a filing date had **not** been granted and requiring drawings as described in the specification. The "Notice" further stated that the filing date would be the date of receipt of the omitted drawings.

In response, 3 sheets of drawings, including figures No. 1-6, a copy of the first page of patent No. 6,516,363, application 09/937,050 and the present petition were filed on October 20, 2003.

A review of the papers filed on July 3, 2003, reveals that the drawings were present in the USPTO on July 3, 2003, albeit in a copy of PCT/GB00/00939 (WO/00/56631). Since the papers filed on July 3, 2003, included drawings, on petition, the papers may be accorded a filing date of July 3, 2003.

The petition is granted. No petition fee is due. Deposit account 06-1050 is being refunded the $130.00

The application is being returned to the Office of Initial Patent Examination for further processing with a filing date of July 3, 2003, using the copy of the PCT/GB00/00939 (WO 00/56631) supplied on July 3, 2003.

Telephone inquiries related to this decision may be directed to the undersigned at (703) 306-0251.

Charlema R. Grant

Charlema R. Grant
Petitions Attorney
Office of Petitions

UNITED STATES PATENT AND TRADEMARK OFFICE

Commissioner for Patents
United States Patent and Trademark Office
P.O. Box 1450
Alexandria, VA 22313-1450
www.uspto.gov

COOPER & DUNHAM, LLP
1185 AVENUE OF THE AMERICAS
NEW YORK, NY 10036

COPY MAILED
AUG 26 2008

In re Application of :
Minoru Fukuda et al :
Application No. 10/613,352 : ON PETITION
Filed: July 3, 2003 :
Attorney Docket No. 2271/56418-Z-RE

This is a decision on the petition, filed August 25, 2008 under 37 CFR 1.313(c)(2) to withdraw the above-identified application from issue after payment of the issue fee.

The petition is **GRANTED**.

The above-identified application is withdrawn from issue for consideration of a submission under 37 CFR 1.114 (request for continued examination). See 37 CFR 1.313(c)(2).

Petitioner is advised that the issue fee paid on July 28, 2008 in the above-identified application cannot be refunded. If, however, the above-identified application is again allowed, petitioner may request that it be applied towards the issue fee required by the new Notice of Allowance.[1]

Telephone inquiries should be directed to Irvin Dingle at (571) 272-3210.

This matter is being referred to Technology Center AU 2827 for processing of the request for continued examination under 37 CFR 1.114 and for consideration of the concurrently filed Information Disclosure Statement.

Irvin Dingle
Petitions Examiner
Office of Petitions

[1] The request to apply the issue fee to the new Notice may be satisfied by completing and returning the new Issue Fee Transmittal Form PTOL-85(b), which includes the following language thereon: Commissioner for Patents is requested to apply the Issue Fee and Publication Fee (if any) or re-apply any previously paid issue fee to the application identified above. Petitioner is advised that, whether a fee is indicated as being due or not, the Issue Fee Transmittal Form **must** be completed and timely submitted to avoid abandonment. Note the language in bold text on the first page of the Notice of Allowance and Fee(s) Due (PTOL-85).

UNITED STATES PATENT AND TRADEMARK OFFICE

Commissioner for Patents
United States Patent and Trademark Office
P.O. Box 1450
Alexandria, VA 22313-1450
www.uspto.gov

JASON P. FIORILLO
TESTA, HURWITZ & THIBEAULT, LLP
HIGH STREET TOWER
125 HIGH STREET
BOSTON, MA 02110

MAILED

MAY 0 8 2009

OFFICE OF PETITIONS

In re Application of	:	
Saed et al.	:	DECISION ON PETITION
Application No. 10/613,355	:	TO WITHDRAW
Filed: July 3, 2003	:	FROM RECORD
Attorney Docket No. 9931-0026	:	

This is a decision on the Request to Withdraw as attorney or agent of record under 37 C.F.R. § 1.36(b), filed December 29, 2005.

The request is **NOT APPROVED** because it is moot.

A review of the file record indicates that on January 18, 2006 the power of attorney to Testa, Hurwitz & Thibeault, LLP was revoked by the assignee of the patent application. Accordingly, the request to withdraw under 37 C.F.R. § 1.36(b) is moot.

All future communications from the Office will be directed to the below-listed address until otherwise notified by applicant.

Telephone inquires concerning this decision should be directed to the undersigned at 571-272- 7751. All other inquires concerning either the examination or status of the application should be directed to the Technology Center.

Joan Olszewski

Joan Olszewski
Petitions Examiner
Office of Petitions

cc: Stolowitz Ford Cowger LLP
621 SW Morrison St
Suite 600
Portland OR 97205

UNITED STATES PATENT AND TRADEMARK OFFICE

Commissioner for Patents
United States Patent and Trademark Office
P.O. Box 1450
Alexandria, VA 22313-1450
www.uspto.gov

MAILED

AUG 16 2006

Technology Center 2100

TOWNSEND AND TOWNSEND AND CREW, LLP
TWO EMBARCADERO CENTER
EIGHTH FLOOR
SAN FRANCISCO, CA 94111-3834

In re Application of: Suzuki, Motoyuki
Application No. 10/613,357
Filed: 2 July 2003
For: METHOD AND APPARATUS FOR DATA INTEGRATION SECURITY

DECISION ON PETITION
TO MAKE SPECIAL
(ACCELERATED EXAMINATION)
UNDER M.P.E.P. §708.02 (VIII)

This is a decision on the petition filed 17 October 2005, under 37 C.F.R. 102(d) and M.P.E.P. § 708.02(VIII): Accelerated Examination, to make the above-identified application special.

The Petition is **GRANTED**.

M.P.E.P. § 708.02, Section VIII which sets out the prerequisites for a grantable petition for Accelerated Examination under 37 C.F.R. § 102(d) states in relevant part:

A new application (one which has not received any examination by the examiner) may be granted special status provided that applicant (and this term includes applicant's attorney or agent) complies with each of the following items:

(a) Submits a petition to make special accompanied by the fee set forth in 37 CFR 1.17(h);

(b) Presents all claims directed to a single invention, or if the Office determines that all the claims presented are not obviously directed to a single invention, will make an election without traverse as a prerequisite to the grant of special status;

(c) Submits a statement(s) that a pre-examination search was made, listing the field of search by class and subclass, publication, Chemical Abstracts, foreign patents, etc. The pre-examination search must be directed to the invention as claimed in the application for which special status is requested. A search made by a foreign patent office satisfies this requirement;

(d) Submits one copy each of the references deemed most closely related to the subject matter encompassed by the claims if said references are not already of record; and

(e) Submits a detailed discussion of the references, which discussion points out, with the particularity required by 37 CFR 1.111 (b) and (c), how the claimed subject matter is patentable over the references.

Petition to Make Special **GRANTED** since all of the requirements for special status under MPEP § 708.02(VIII) have been met.

The application is being forwarded to the Examiner for accelerated examination in accordance with M.P.E.P. §708.02, Section VIII. If the application is subsequently allowed, it will be given priority for printing. See M.P.E.P. §1309.

Brian L. Johnson
Special Programs Examiner
Technology Center 2100
Computer Architecture, Software and Information Security
571-272-3595

GO

RECEIVED
CENTRAL FAX CENTER
FEB 1 8 2005

IN THE UNITED STATES PATENT AND TRADEMARK OFFICE

In re Application of:	§	BEFORE THE EXAMINER:
Datta et al.	§	B. Lipman
Serial No.: 10/613,373	§	Group Art Unit No.: 1711
Filed: July 03, 2003	§	Attorney Docket No.: 1997B050/3
For: Thermoplastic Polymer	§	
Blends of Isotactic Polypropylene and	§	
Alpha-Olefin/Propylene Copolymers	§	
Customer No.: 23455	§	February 18, 2005

Commissioner for Patents
P. O. Box 1450
Alexandria, VA 22313-1450

PETITION TO MAKE SPECIAL

Sir:

Pursuant to 37 CFR § 1.102(c) and MPEP § 708.02 IV. (APPLICANT'S AGE), Applicant, Charles Cozewith, hereby petitions the Commissioner, through his attorney, that this application be made special and that the prosecution thereof be expedited as much as possible. As a basis for granting the above petition, it is submitted that Applicant is 65 years of age or more. Attached herewith is a copy of Applicant's birth certificate.

Respectfully submitted,

February 18, 2005
Date

Leandro Arechederra III
Attorney for Applicants
Registration No. 52,457

ExxonMobil Chemical Co.
Law Technology
P.O. Box 2149
Baytown, Texas 77522-2149
Phone: 281-834-2173
Fax: 281-834-2495

PETITION GRANTED

Richard Crispino
Special Program Examiner
TC 1700 MAR - 3 2005

I:\BPC\LAW\Prosecution\EMCC Prosecution\1997\1997b050\US\1997B050-3\1997B050-3-US-2005FEB18-Petition to Make Special.doc

IN THE UNITED STATES PATENT AND TRADEMARK OFFICE

In re Application of:	§	BEFORE THE EXAMINER:
Datta et al.	§	Nathan M. Nutter
Serial No.: 10/613,374	§	Group Art Unit No.: 1711
Filed: July 03, 2003	§	Attorney Docket No.: 1998B037A/2
For: Elastic Blends Comprising	§	Confirmation No.: 7189
Crystalline Polymer and	§	
Crystallizable Polymers of Propylene	§	
Customer No.: 23455	§	February 14, 2005

Commissioner for Patents
P. O. Box 1450
Alexandria, VA 22313-1450

RECEIVED
CENTRAL FAX CENTER
FEB 14 2005

PETITION TO MAKE SPECIAL

Sir:

Pursuant to 37 CFR § 1.102(c) and MPEP § 708.02 IV. (APPLICANT'S AGE), Applicant, Charles Cozewith, hereby petitions the Commissioner, through his attorney, that this application be made special and that the prosecution thereof be expedited as much as possible. As a basis for granting the above petition, it is submitted that Applicant is 65 years of age or more. Attached herewith is a copy of Applicant's birth certificate.

Respectfully submitted,

February 14, 2005
Date

Leandro Arechederra III
Attorney for Applicants
Registration No. 52,457

ExxonMobil Chemical Co.
Law Technology
P.O. Box 2149
Baytown, Texas 77522-2149
Phone: 281-834-2173
Fax: 281-834-2495

PETITION GRANTED

Richard Crispino
Special Program Examiner
TC 1700

MAR - 3 2005

I:\BPCLAW\Prosecution\EXCC Prosecution\1998\1998B037A-2\1998B037A-2-US-2005FEB14-Petition to Make Special.doc

UNITED STATES PATENT AND TRADEMARK OFFICE

Commissioner for Patents
United States Patent and Trademark Office
P.O. Box 1450
Alexandria, VA 22313-1450
www.uspto.gov

EXXONMOBIL CHEMICAL COMPANY
5200 BAYWAY DRIVE
P.O. BOX 2149
BAYTOWN TX 77522-2149

COPY MAILED

MAY 0 6 2005

OFFICE OF PETITIONS

In re Application of	:	
Sudhin Datta et al	:	
Application No. 10/613,374	:	ON PETITION
Filed: July 3, 2003	:	
Attorney Docket No. 98B037A/2	:	

This is a decision on the petition, filed May 5, 2005, under 37 CFR 1.313(c)(2) to withdraw the above-identified application from issue after payment of the issue fee.

The petition is **GRANTED.**

The above-identified application is withdrawn from issue for consideration of a submission under 37 CFR 1.114 (request for continued examination). See 37 CFR 1.313(c)(2).

Petitioner is advised that the issue fee paid on April 15, 2005 in the above-identified application cannot be refunded. If, however, the above-identified application is again allowed, petitioner may request that it be applied towards the issue fee required by the new Notice of Allowance.[1]

Telephone inquiries should be directed to the undersigned at (571) 272-3208.

The examiner of Technology Center AU 1711 will consider the request for continued examination under 37 CFR 1.114.

Karen Creasy

Karen Creasy
Petitions Examiner
Office of Petitions
Office of the Deputy Commissioner
for Patent Examination Policy

---

[1] The request to apply the issue fee to the new Notice may be satisfied by completing and returning the new Issue Fee Transmittal Form PTOL-85(b), which includes the following language thereon: "Commissioner for Patents is requested to apply the Issue Fee and Publication Fee (if any) or re-apply any previously paid issue fee to the application identified above." Petitioner is advised that, whether a fee is indicated as being due or not, the Issue Fee Transmittal Form **must** be completed and timely submitted to avoid abandonment. Note the language in bold text on the first page of the Notice of Allowance and Fee(s) Due (PTOL-85).

UNITED STATES PATENT AND TRADEMARK OFFICE

COMMISSIONER FOR PATENTS
UNITED STATES PATENT AND TRADEMARK OFFICE
P.O. BOX 1450
ALEXANDRIA, VA 22313-1450
www.uspto.gov

Stallman & Pollock, LLP
Suite 2200
353 Sacramento Street
San Francisco, CA 94111

COPY MAILED

JAN 1 1 2005

OFFICE OF PETITIONS

In re Application of	:	
Abdurrahman Sezinger, et al.	:	
Application No. 10/613/378	:	ON PETITION
Filed: July 3, 2003	:	
Attorney Docket No. TWI-32410	:	

This is a decision on the petition under 37 CFR 1.137(b), filed June 21, 2004, to revive the above-identified application.

The petition is **GRANTED**.

Telephone inquiries concerning this decision should be directed to the undersigned at (703) 306-3475.

The application file is being forwarded to Technology Center 2800.

Marianne E. Jenkins
Petitions Examiner
Office of Petitions
Office of the Deputy Commissioner
for Patent Examination Policy

UNITED STATES PATENT AND TRADEMARK OFFICE

Commissioner for Patents
United States Patent and Trademark Office
P.O. Box 1450
Alexandria, VA 22313-1450
www.uspto.gov

TEXAS INSTRUMENTS INCORPORATED
P O BOX 655474, M/S 3999
DALLAS TX 75265

COPY MAILED

JUN 0 5 2009

OFFICE OF PETITIONS

In re Patent No. 6,873,450	:	
Issue Date: March 29, 2005	:	
Application No. 10/613,379	:	NOTICE
Filed: July 3, 2003	:	
Attorney Docket No. P108-US	:	

This is a notice regarding your request for acceptance of a fee deficiency submission under 37 CFR 1.28. On September 1, 1998, the Court of Appeals for the Federal Circuit held that 37 CFR 1.28(c) is the sole provision governing the time for correction of the erroneous payment of the issue fee as a small entity. **See DH Technology v. Synergystex International, Inc. 154 F.3d 1333, 47 USPQ2d 1865 (Fed. Cir. Sept. 1, 1998).**

The Office no longer investigates or rejects original or reissue applications under 37 CFR 1.56. **1098 Off. Gaz. Pat. Office 502 (January 3, 1989)**. Therefore, nothing in this Notice is intended to imply that an investigation was done.

Your fee deficiency submission under 37 CFR 1.28 is hereby **ACCEPTED**.

This patent is no longer entitled to small entity status. Accordingly, all future fees paid in this patent must be paid at the large entity rate.

Liana Walsh
Petitions Examiner
Office of Petitions

UNITED STATES PATENT AND TRADEMARK OFFICE

Commissioner for Patents
United States Patent and Trademark Office
P.O. Box 1450
Alexandria, VA 22313-1450
www.uspto.gov
DIW Jun-05

ST. ONGE STEWARD JOHNSTON & REENS, LLC
986 BEDFORD STREET
STAMFORD CT 06905-5619

COPY MAILED

JUL 0 1 2005

OFFICE OF PETITIONS

In re Application of	:	
Martin Brox	:	
Application No. 10/613,381	:	DECISION ON PETITION
Filed: 3 July, 2003	:	
Atty Docket No. 04020-P0002A	:	

This is a decision on the petition filed on 25 May, 2005, under 37 CFR 1.137(b),[1] to revive the above-identified application.

The petition is **GRANTED**.

The application became abandoned on 11 March, 2005, for failure to timely file corrected drawings as required by the Notice of

---

[1] Effective December 1, 1997, the provisions of 37 CFR 1.137(b) now provide that where the delay in reply was unintentional, a petition may be filed to revive an abandoned application or a lapsed patent pursuant to 37 CFR 1.137(b). A grantable petition filed under the provisions of 37 CFR 1.137(b) must be accompanied by:

(1) the required reply, unless previously filed. In a nonprovisional application abandoned for failure to prosecute, the required reply may be met by the filing of a continuing application. In a nonprovisional utility or plant application filed on or after June 8, 1995, and abandoned for failure to prosecute, the required reply may also be met by the filing of a request for continuing examination in compliance with § 1.114. In an application or patent, abandoned or lapsed for failure to pay the issue fee or any portion thereof, the required reply must be the payment of the issue fee or any outstanding balance thereof.

(2) the petition fee as set forth in 37 CFR 1.17(m);

(3) a statement that the entire delay in filing the required reply from the due date for the reply until the filing of a grantable petition pursuant to 37 CFR 1.137(b) was unintentional. The Commissioner may required additional information where there is a question whether the delay was unintentional; and

(4) any terminal disclaimer (and fee as set forth in 37 CFR 1.20(d)) required pursuant to 37 CFR 1.137(c)).

Allowability mailed on 10 December, 2004, which set a three (3)-month statutory period for reply. Notice of Abandonment was mailed on 5 May, 2005.

Petitioner has now filed corrected drawings.

This application is being referred to the Publishing Division for processing into a patent.

Telephone inquiries concerning this matter may be directed to the undersigned at (571) 272-3231.

D Wood

Douglas I. Wood
Senior Petitions Attorney
Office of Petitions

UNITED STATES PATENT AND TRADEMARK OFFICE

Commissioner for Patents
United States Patent and Trademark Office
P.O. Box 1450
Alexandria, VA 22313-1450
www.uspto.gov

MAILED
FROM DIRECTOR'S OFFICE

JUN 23 2006

TECHNOLOGY CENTER 3600

Thelen Reid & Priest LLP
P.O. Box 640640
San Jose, CA 95164-0640

June 13, 2006

In re Application of:	:	**DECISION ON PETITION TO**
Karsten ANDERSEN, ET AL.	:	**REVIEW RESTRICTION**
Application No. 10/613,396	:	**REQUIREMENT UNDER**
Filed: July 3, 2003	:	**37 CFR 1.144**

This is in response to the petition filed March 29, 2006 under 37 CFR 1.144 requesting the Director to review the final requirement for restriction. The petition requests the Director to withdraw the requirement for restriction and substitute a new restriction requirement.

A review of the record indicates that a requirement for restriction was mailed on September 16, 2004. The restriction requirement identified four species:

Species A – Figures 3-17 and claims 1-7 and 9-10;
Species B – Figures 19-25 and claim 8;
Species C – Figures 26-32; and,
Species D – Figures 33-45

Additionally, claim 11 was identified as being generic.

Applicants responded on February 22, 2005 with an election of Species A, claims 1-7 and 9-10. Election was made with traverse. Applicants argued the Examiner failed to identify a Species in connection with claim 11 and that claim 11 should be considered as part of Species A. Applicants further argued, "Law requires that a restriction requirement be based on claims, not on figures."

In the first Office action on the merits dated May 4, 2005, Examiner noted Applicants' election with traverse and withdrew claim 8 as being drawn to a nonelected species. Examiner pointed out the restriction of Species A and B was based on claims and that claim 11 was found to be generic. Therefore, the Examiner deemed the requirement proper and was made Final.

In Applicants' response, dated July 29, 2005, it was further argued the Examiner did not refer to Species C and D. Applicants requested the Examiner to withdraw the restriction to Species C and D as well as identify Species A and B to claims, not to figures. Applicants also argued that since the Examiner did not mention Species C or D in the Office action dated May 4, 2005, it could be assumed the Examiner withdrew the restriction requirement concerning Species C or D. The response also noted that since Examiner did not mention the original characterization of Species A being directed to Figures 3-17 and Species B being directed to Figures 19-25, it could be assumed

the Examiner withdrew the restriction requirement concerning Species A and B to the extent the requirements refer to figures. Applicants also added new claims 12-31.

In the Final Office action dated October 4, 2005, Examiner reiterated there was no obligation or a requirement to set forth the restriction with regard to claims as per MPEP 809.02(a). Examiner also indicated that Applicants incorrectly assumed any restriction requirement was withdrawn or modified.

At the outset, Applicants are reminded that MPEP 809.02(a) clearly indicates the actions that should be followed by the Examiner when making an appropriate restriction between species:

> (A) Identify generic claims or indicate that no generic claims are present, and
>
> (B) Clearly identify each of the disclosed species, to which claims are to be restricted. "**The species are preferably identified as the species of figures 1, 2, and 3"**...If the species cannot be conveniently identified, the claims may be grouped in accordance with the species to which they are restricted. [Emphasis added]

Therefore, it is not improper to identify a species requirement with respect to figures, rather than claims, as argued by Applicants. The Examiner may, for Applicant's convenience, include a proposed listing of claims to which he or she believes reads on particular species.

However as per MPEP 809.02(a), "to be complete, a reply to a requirement...should include a proper election along with a listing of all claims readable thereon, including any claims subsequently added." Therefore, it is not a requirement for the Examiner to provide a listing of claims. It is a requirement for Applicants.

After a careful review of the specification, the following disclosed species are found:

Species A is directed towards the transportation of tower sections (Figures 3-18 and 33-46),
Species B is directed towards the transporting of blades (Figures 19-25),
Species C is directed towards the transportation of nacelles (Figures 26-32), and
Species D is directed towards the transportation of rotor hubs (Figures 47 and 48).

However, the application does not include claims directed towards all of the identified species above. To the contrary, only Species A and B are claimed.

As per MPEP 808.02, restriction is proper if the inventions as claimed are shown to be independent or distinct under the criteria of MPEP 806.05(c). [Emphasis added]

It is agreed only two of the species identified above should have been restricted. Therefore, the restriction requirement dated September 16, 2004 should have been made as follows:

Species A – Directed towards Figures 3-18 and 33-46; and,
Species B – Directed towards Figures 19-25.

Claim 11 is still identified as being generic. Upon the allowance of a generic claim, Applicants will be entitled to consideration of claims to additional species which are written in dependent form or otherwise include all the limitations of an allowed generic claim as provided by 37 CFR 1.141.

The petition is **GRANTED** to the extent indicated.

It is acknowledged that Applicants' requested relief included an election of Species A, as well as identifying claims 1-7 and 9-31 that read on the elected Species.

Since Applicants have received an examination of the above-noted claims consistent with the election of Species A, it will not be necessary for the examiner to modify the restriction requirement in another non-final Office action.

It is also noted that a Request for Continued Examination was filed on May 2, 2006. Therefore, the application will be returned to the examiner for immediate action consistent with this decision.

Telephone inquiries should be directed to D. Glenn Dayoan, Supervisory Patent Examiner, at (571) 272-6659.

John J. Love, Director
Patent Technology Center 3600
(571) 272-5250

Dgd/snm: 6/13/06
SM

UNITED STATES PATENT AND TRADEMARK OFFICE

Commissioner for Patents
United States Patent and Trademark Office
P.O. Box 1450
Alexandria, VA 22313-1450
www.uspto.gov

CROWELL & MORING LLP
INTELLECTUAL PROPERTY GROUP
P.O. BOX 14300
WASHINGTON DC 20044-4300

COPY MAILED

DEC 15 2009

OFFICE OF PETITIONS

In re Application of
Lucy M. Bull et al
Application No. 10/613,422
Filed: July 2, 2003
Attorney Docket No. B500790

DECISION ON PETITION

This is a decision on the petition under the unintentional provisions of 37 CFR 1.137(b), filed September 21, 2009, to revive the above-identified application.

The petition is **GRANTED**.

The petition satisfies the conditions for revival pursuant to the provisions of 37 CFR 1.137(b) in that (1) the reply in the form of an RCE and an amendment; (2) the petition fee; and (3) the required statement of unintentional delay have been received. Accordingly, the reply to the final rejection mailed January 8, 2009, is accepted as having been unintentionally delayed.

An extension of time under 37 CFR 1.136 must be filed prior to the expiration of the maximum extendable period for reply. *See* In re Application of S., 8 USPQ2d 1630, 1631 (Comm'r Pats. 1988). Since the $1,110.00 extension of time fee submitted with the petition on September 21, 2009 was subsequent to the maximum extendable period for reply, this fee is unnecessary and will be credited to petitioner's deposit account as authorized.

Telephone inquiries concerning this decision should be directed to the undersigned at (571) 272-3208.

This application is being referred to Technology Center AU 1797 for appropriate action by the Examiner in the normal course of business on the reply received September 21, 2009.

/KOC/
Karen Creasy
Petitions Examiner
Office of Petitions

UNITED STATES PATENT AND TRADEMARK OFFICE

COMMISSIONER FOR PATENTS
UNITED STATES PATENT AND TRADEMARK OFFICE
P.O. BOX 1450
ALEXANDRIA, VA 22313-1450
www.uspto.gov

AKA CHAN LLP / CISCO
900 LAFAYETTE STREET
SUITE 710
SANTA CLARA, CA 95050

COPY MAILED

AUG 0 8 2008

In re Application of
Vikram Devdas, et al.
Application No. 10/613,426
Filed: July 3, 2003
Attorney Docket No. CISCP816

ON PETITION

This is a decision in response to the petition, filed March 21, 2008, to revive the above-identified application under the provisions of 37 CFR 1.137(b).

The petition is **GRANTED**.

The application became abandoned for a failure to reply in a timely manner to a non-final Office action mailed September 19, 2006. A Notice of Abandonment was mailed on April 26, 2007. On March 21, 2008, the present petition was filed, including an improper Request for Continued Examination (RCE) under 37 CFR 1.114.

The filing of a RCE is not permissible unless prosecution in the application is closed. Accordingly, the improper RCE cannot not be accepted and the RCE filing fees paid are subject to refund. Any request for refund must included a copy of this decision and be mailed to Mail Stop 16, Director of the U.S. Patent and Trademark Office, P. O. Box 1450, Alexandria, VA 22313-1450 or faxed to the Customer Service Help Desk at (571) 273-6500.

The petition satisfies the conditions for revival pursuant to the provisions of 37 CFR 1.137(b) in that petitioner has supplied (1) an amendment; (2) the petition fee of $1,540; and (3) an adequate statement of unintentional delay.

This application is being referred to Technology Center AU 2616 for appropriate action by the Examiner in the normal course of business on the amendment filed March 21, 2008.

Telephone inquiries concerning this decision should be directed to the undersigned at (571) 272-3204. Inquiries relating to further prosecution should be directed to the Technology Center.

Sherry D. Brinkley
Petitions Examiner
Office of Petitions

UNITED STATES PATENT AND TRADEMARK OFFICE

Commissioner for Patents
United States Patent and Trademark Office
P.O. Box 1450
Alexandria, VA 22313-1450
www.uspto.gov

Paper No.

CARMEN PILI EKSTROM
727 SUNSHINE DRIVE
LOS ALTOS CA 94024

APR 17 2007

In re Application of:
Leonel Y. Martinez, et al.
Serial No.: 10/613,433
Filed: July 3, 2003
Attorney Docket No.: MX/JFC-Serv-001

DECISION ON PETITION FROM REQUIREMENT FOR RESTRICTION UNDER 37 CFR § 1.144

This is in response to Applicant's petition under 37 CFR § 1.144 from requirement for restriction, dated December 21, 2005, wherein Applicant petitions for the withdrawal of the restriction requirement first asserted on December 16, 2004 and made final on May 19, 2005.

The petition is hereby DENIED. Applicants' December 21, 2005 arguments regarding two way distinctness are not persuasive since the Examiner has correctly identified inventions II and I as a process of making and product made, not a combination and a subcombination. Applicants' December 21, 2005 arguments regarding "single inventive concept" and "unity of invention" are not persuasive since the instant application was not filed under the Patent Cooperation Treaty, 35 U.S.C. § 371. The restriction requirement made final on May 19, 2005 is sustained.

Telephone inquires should be directed to Dean Reichard at (571) 272-2800 ext 31.

The above-identified application is being forwarded to the Board of Patent Appeals and Interferences (BPAI) for prompt appropriate action.

Andrew Hirshfeld, Acting Director
Technology Center 2800
Semiconductors, Electrical and Optical
Systems and Components

UNITED STATES PATENT AND TRADEMARK OFFICE

UNITED STATES DEPARTMENT OF COMMERCE
United States Patent and Trademark Office
Address: COMMISSIONER FOR PATENTS
P.O. Box 1450
Alexandria, Virginia 22313-1450
www.uspto.gov

APPLICATION NO.	FILING DATE	FIRST NAMED INVENTOR	ATTORNEY DOCKET NO.	CONFIRMATION NO.
10/613,433	07/03/2003	Leonel Yanez Martinez	MX/JFC-Serv-001	5111

7590 08/26/2009

Carmen Pili Ekstrom
727 Sunshine Dr.
Los Altos, CA 94024

EXAMINER
MAYO III, WILLIAM H

ART UNIT	PAPER NUMBER
2831	

MAIL DATE	DELIVERY MODE
08/26/2009	PAPER

Please find below and/or attached an Office communication concerning this application or proceeding.

The time period for reply, if any, is set in the attached communication.

UNITED STATES PATENT AND TRADEMARK OFFICE

COMMISSIONER FOR PATENTS
UNITED STATES PATENT AND TRADEMARK OFFICE
WASHINGTON, D.C. 20231
www.uspto.gov

Carmen Pili Ekstrom
727 Sunshine Dr.
Los Altos, CA 94024

In re Application of:	:	
Martinez et al.	:	DECISION ON PETITION
Serial No.: 10/613,433	:	
Filed: July 3, 2003	:	
Attorney Docket No.: MX/JFC-Serv-001	:	

This is a decision on the petition under 37 C.F.R. § 1.144, filed on August 12, 2009, requesting withdrawal of the restriction requirement first asserted on December 16, 2004 and made final on May 19, 2005.

The petition is DENIED.

Petitioner asserts that, while the examiner determines that the inventions are distinct but are related as process of making and product made, the inventions are related as combination/subcombination and a two-way distinctness must be shown for a proper restriction. It is also asserted that the examiner fails to state whether the process claimed defines a contribution over the prior art for a lack of unity rejection pursuant to 37 CFR 1.475.

It is noted that the arguments presented in this petition are the same as the arguments made in an earlier petition filed December 21, 2005, which petition was denied in a decision of April 17, 2007. Petitioner does not provide any new reasoning to support the assertion that the inventions are related as combination/subcombination. Pursuant to M.P.E.P. § 806.05(a), the two claimed inventions cannot be characterized as being related as combination/subcombination. The reliance on the unity of invention practice for international applications in their U.S. national stage was found not persuasive but no further argument is being presented in the instant petition. Accordingly, the petition is hereby **DENIED.** The restriction requirement made final on May 19, 2005 is again sustained.

Telephone inquiries should be directed to Diego Gutierrez at 571-272-2245.

The above identified application is being forwarded to the examiner for consideration of the Pre-Appeal Brief Request filed August 12, 2009.

John W. Cabeca, Director
Technology Center 2800
Semiconductors, Electrical and Optical
Systems and Components

SCAN! **Please forward case and paper to address shown below.**

SPE RESPONSE FOR CERTIFICATE OF CORRECTION

DATE : 8/8/08

Paper No.: _____

TO SPE OF : ART UNIT 1623 Jiang Shaojia (Anna) spe

SUBJECT : Request for Certificate of Correction for Appl. No.: 10/613437 Patent No.: 7045506

Please respond to this request for a certificate of correction within 7 days.

Please review the requested changes/corrections as shown in the attached certificate of correction. Please complete this form (see below) and forward it with the file to:

Certificates of Correction Branch (CofC)
South Tower - 9A22
Palm Location 7580

HENRY RANDALL
Certificates of Correction Branch
703-308-9390 ext. _____

Thank You For Your Assistance

The request for issuing the above-identified correction(s) is hereby:

Note your decision on the appropriate box.

XXXX ☐ Approved — All changes apply.

☐ Approved in Part — Specify below which changes do not apply.

☐ Denied — State the reasons for denial below.

Comments: The C of C has been approved.

/S. A. Jiang/

SPE

1623

Art Unit

UNITED STATES PATENT AND TRADEMARK OFFICE

UNITED STATES DEPARTMENT OF COMMERCE
United States Patent and Trademark Office
Address: COMMISSIONER FOR PATENTS
P.O. Box 1450
Alexandria, Virginia 22313-1450
www.uspto.gov

TOWNSEND AND TOWNSEND AND CREW
LLP/EVALVE INC. (020489)
TWO EMBARCADERO CENTER
8TH FLOOR
SAN FRANCISCO, CA 94111

Mail Date: 04/21/2010

Applicant	: Eric A. Goldfarb	: DECISION ON REQUEST FOR
Patent Number	: 7608091	: RECALCULATION of PATENT
Issue Date	: 10/27/2009	: TERM ADJUSTMENT IN VIEW
Appliction No	: 10/613,443	: OF WYETH AND NOTICE OF INTENT TO
Filed	: 07/03/2003	: ISSUE CERTIFICATE OF CORRECTION
		:

The Request for Recalculation is **GRANTED** to the extent indicated.

The patent term adjustment has been determined to be **1066** days. The USPTO will *sua sponte* issue a certificate of correction reflecting the amount of PTA days determined by the recalculation.

Prior to the issuance of the certificate of correction, the USPTO will afford patentee an opportunity to be heard and request reconsideration. Accordingly, patentee has **one month or thirty (30) days**, whichever is longer, to file a request for reconsideration of this patent term adjustment calculation. See 35 U.S.C. 154(b)(3)(B)(ii) and 37 CFR 1.322(a)(4). No extensions of time will be granted under 37 CFR 1.136.

Patentee should use document code PET.OP if electronically filing a request for reconsideration of this patent term adjustment calculation. The patentee must also include the information required by 37 CFR 1.705(b)(2) and the fee required by 37 CFR 1.18(e). If patentee does not file a timely request for reconsideration of this patent term adjustment calculation including the information required by 37 CFR 1.705(b)(2) and the fee required by 37 CFR 1.18(e), the USPTO will issue a certificate of correction reflecting the PTA determination noted above.

Patentee should be aware that in order to preserve the right to review in the United States District Court for the District of Columbia of the USPTO patent term adjustment determination, patentee must ensure that he or she also take the steps required under 35 U.S.C. 154(b)(4)(A) in a timely manner. Nothing in the request for recalculation should be construed as providing an alternative time frame for commencing a civil action under 35 U.S.C. 154(b)(4)(A).

Any questions concerning this decision should be directed to the Office of Patent Legal Administration at 571-272-7702.

UNITED STATES PATENT AND TRADEMARK OFFICE

Commissioner for Patents
United States Patent and Trademark Office
P.O. Box 1450
Alexandria, VA 22313-1450
www.uspto.gov

LAWRENCE E. ASHERY
RATNERPRESTIA
ONE WESTLAKES (BERWNY), SUITE 301
P.O. Box 980
VALLEY FORGE, PA 19482

COPY MAILED

APR 2 0 2006

OFFICE OF PETITIONS

In re Application of	:	
Myr, David	:	
Application No. 10/613,467	:	ON PETITION
Filed: July 3, 2003	:	
Attorney Docket No. MAK-105US	:	

This is a decision on the petition under 37 CFR 1.102(c)(1), filed March 10, 2006, to make the above-identified application special based on applicant's age as set forth in M.P.E.P. § 708.02, Section IV.

The petition is **GRANTED**.

A grantable petition to make an application special under 37 CFR 1.102(c)(1) and MPEP § 708.02, Section IV: Applicant's Age must be accompanied by evidence showing that at least one of the applicants is 65 years of age, or more, such as a birth certificate or a statement by applicant. No fee is required.

The instant petition includes a statement signed by the applicant, David Myr, along with a copy of his passport. Accordingly, the above-identified application has been accorded "special" status.

Telephone inquiries concerning this decision should be directed to the undersigned at 571-272-3206.

All other inquiries concerning either the examination or status of the application should be directed to the Technology Center.

This matter is being referred to the Technology Center Art Unit 3628 for action on the merits commensurate with this decision.

Liana Chase
Petitions Examiner
Office of Petitions

UNITED STATES PATENT AND TRADEMARK OFFICE

Commissioner for Patents
United States Patent and Trademark Office
P.O. Box 1450
Alexandria, VA 22313-1450
www.uspto.gov

LEE WEINSTEIN
32A FAIRMONT STREET
ARLINGTON MA 02474

COPY MAILED

APR 0 4 2007

OFFICE OF PETITIONS

In re Application of	:	
Hugh Herr	:	
Application No. 10/613,499	:	DECISION ON PETITION
Filed: July 3, 2003	:	
Attorney Docket No. VblMechlmp01	:	

This is a decision on the petition under the unintentional provisions of 37 CFR 1.137(b), filed November 6, 2006, to revive the above-identified application.

The petition is **GRANTED**.

The application became abandoned for failure to reply in a timely manner to the non-final Office action mailed, January 6, 2006, which set a shortened statutory period for reply of three (3) months. No extensions of time under the provisions of 37 CFR 1.136(a) were obtained. Accordingly, the application became abandoned on April 10, 2006.

The petition satisfies the requirements of 37 CFR 1.137(b) in that petitioner has supplied (1) the reply in the form of a response, (2) the petition fee of $750; and (3) a statement of unintentional delay.

It is not apparent whether the person signing the statement of unintentional delay was in a position to have firsthand or direct knowledge of the facts and circumstances of the delay at issue. Nevertheless, such statement is being treated as having been made as the result of a reasonable inquiry into the facts and circumstances of such delay. See 37 CFR 10.18(b) and Changes to Patent Practice and Procedure; Final Rule Notice, 62 Fed. Reg. 53131, 53178 (October 10, 1997), 1203 Off. Gaz. Pat. Office 63, 103 (October 21, 1997). In the event that such an inquiry has not been made, petitioner must make such an inquiry. If such inquiry results in the discovery that it is not correct that the entire delay in filing the required reply from the due date for the reply until the filing of a grantable petition pursuant to 37 CFR 1.137(b) was unintentional, petitioner must notify the Office.

Telephone inquiries concerning this decision should be directed to April Wise at (571) 272-1642.

This application is being referred to Technology Center AU 3738 for appropriate action by the Examiner in the normal course of business on the reply received

Irvin Dingle
Petitions Examiner
Office of Petitions

UNITED STATES PATENT AND TRADEMARK OFFICE

Commissioner for Patents
United States Patent and Trademark Office
P.O. Box 1450
Alexandria, VA 22313-1450
www.uspto.gov

CHARLES G. CALL
20 EAST GOETH ST CH1
CHICAGO IL 60610

MAILED

JUN 22 2009

OFFICE OF PETITIONS

In re Application of	:	
Hugh HERR	:	
Application No. 10/613,499	:	DECISION ON PETITION
Filed: July 03, 2003	:	
Attorney Docket No. H-18	:	

This is a decision on the renewed petition under 37 CFR 1.137(b), filed May 04, 2009, to revive the above-identified application.

The petition is **DISMISSED**.

Any request for reconsideration of this decision must be submitted within TWO (2) MONTHS from the mail date of this decision. Extensions of time under 37 CFR 1.136(a) are permitted. The reconsideration request should include a cover letter entitled "Renewed Petition under 37 CFR 1.137(b)." This is **not** a final agency action within the meaning of 5 U.S.C. § 704.

The application became abandoned for failure to reply in a timely manner to the non-compliant notice mailed, December 26, 2007, which set a shortened statutory period for reply of one (1) month. No extensions of time under the provisions of 37 CFR 1.136(a) were obtained. Accordingly, the application became abandoned on January 29, 2008.

A grantable petition under 37 CFR 1.137(b) must be accompanied by: (1) the required reply, unless previously filed; (2) the petition fee as set forth in 37 CFR 1.17(m); (3) a statement that the entire delay in filing the required reply from the due date for the reply until the filing of a grantable petition pursuant to 37 CFR 1.137(b) was unintentional; and (4) any terminal disclaimer (and fee as set forth in 37 CFR 1.20(d)) required by 37 CFR 1.137(c). Where there is a question as to whether either the abandonment or the delay in filing a petition under 37 CFR 1.137 was unintentional, the Commissioner may require additional information. *See* MPEP 711.03(c)(II)(C) and (D). The instant petition lacks items (2) above.

The petition in the above-identified application was <u>not</u> accompanied by payment of the required fee. A review of the Office records shows that the credit card provided with the petition was

declined for payment. No consideration on the merits can be given that petition until the required fee is received.

Further correspondence with respect to this matter should be addressed as follows:

By mail: Mail Stop PETITIONS
Commissioner for Patents
Post Office Box 1450
Alexandria, VA 22313-145

By hand: Customer Service Window
Mail Stop Petitions
Randolph Building
401 Dulany Street
Alexandria, VA 22314

By fax: (703) 872-9306
ATTN: Office of Petitions

Any questions concerning this matter may be directed to the undersigned at (571) 272-4231.

Michelle R. Eason
Paralegal Specialist
Office of Petitions

UNITED STATES PATENT AND TRADEMARK OFFICE

Commissioner for Patents
United States Patent and Trademark Office
P.O. Box 1450
Alexandria, VA 22313-1450
www.uspto.gov

CHARLES G. CALL
20 EAST GOETH ST CH1
CHICAGO IL 60610

MAILED

AUG 3 1 2009

OFFICE OF PETITIONS

In re Application of
Hugh M. HERR
Application No. 10/613,499
Filed: July 03, 2003
Attorney Docket No. H-18

DECISION ON PETITION

This is a decision on the renewed petition under the unintentional provisions of 37 CFR 1.137(b), filed June 29, 2009, to revive the above-identified application.

The petition is **GRANTED**.

The application became abandoned for failure to reply in a timely manner to the non-compliant notice mailed, December 26, 2007, which set a shortened statutory period for reply of one (1) month. No extensions of time under the provisions of 37 CFR 1.136(a) were obtained. Accordingly, the application became abandoned on January 27, 2008.

The petition satisfies the conditions for revival pursuant to the provisions of 37 CFR 1.137(b) in that (1) the reply in the form of an amendment (2) the petition fee of $810.00; and (3) the required statement of unintentional delay have been received. Accordingly, the reply to the non-compliant notice of June 17, 2008, is accepted as having been unintentionally delayed.

Telephone inquiries concerning this decision should be directed to the undersigned at (571) 272-4231.

The application file is being referred to Technology Center AU 3774 for appropriate action on the concurrently filed amendment.

Michelle R. Eason
Paralegal Specialist
Office of Petitions

UNITED STATES PATENT AND TRADEMARK OFFICE

Commissioner for Patents
United States Patent and Trademark Office
P.O. Box 1450
Alexandria, VA 22313-1450
www.uspto.gov

GOODWIN PROCTER LLP
ATTN: PATENT ADMINISTRATOR
135 COMMONWEALTH DRIVE
MENLO PARK CA 94025-1105

MAILED

JUL 08 2010

OFFICE OF PETITIONS

In re Application of	:	
Freeman et al.	:	
Application No. 10/613,517	:	ON PETITION
Filed: July 3, 2003	:	
Attorney Docket No. 38187-2688.US	:	

This is a decision on the petition under 37 CFR 1.182, filed June 14, 2010, to change the order of the names of the inventors.

The petition is **GRANTED**.

The order of the names of the inventors will be changed as follows:

1. Dominique M. Freeman
2. Don Alden
3. Dirk Boecker

A Corrected Filing Receipt reflecting the above changes is enclosed.

This matter is now being referred to Technology Center AU 3736 to await examination.

Telephone inquiries regarding this decision should be directed to Joan Olszewski at (571) 272-7751. All other inquiries should be directed to the Technology Center.

/Liana Walsh/
Liana Walsh
Petitions Examiner
Office of Petitions

Enclosure: Corrected Filing Receipt

UNITED STATES PATENT AND TRADEMARK OFFICE

UNITED STATES DEPARTMENT OF COMMERCE
United States Patent and Trademark Office
Address: COMMISSIONER FOR PATENTS
P.O. Box 1450
Alexandria, Virginia 22313-1450
www.uspto.gov

APPLICATION NUMBER	FILING or 371(c) DATE	GRP ART UNIT	FIL FEE REC'D	ATTY.DOCKET.NO	TOT CLAIMS	IND CLAIMS
10/613,517	07/03/2003	3736	1002	38187-2688.US	67	6

CONFIRMATION NO. 4774

CORRECTED FILING RECEIPT

77845
Goodwin Procter LLP
Attn: Patent Administrator
135 Commonwealth Drive
Menlo Park, CA 94025-1105

OC000000042480838

Date Mailed: 07/08/2010

Receipt is acknowledged of this non-provisional patent application. The application will be taken up for examination in due course. Applicant will be notified as to the results of the examination. Any correspondence concerning the application must include the following identification information: the U.S. APPLICATION NUMBER, FILING DATE, NAME OF APPLICANT, and TITLE OF INVENTION. Fees transmitted by check or draft are subject to collection. Please verify the accuracy of the data presented on this receipt. **If an error is noted on this Filing Receipt, please submit a written request for a Filing Receipt Correction. Please provide a copy of this Filing Receipt with the changes noted thereon. If you received a "Notice to File Missing Parts" for this application, please submit any corrections to this Filing Receipt with your reply to the Notice. When the USPTO processes the reply to the Notice, the USPTO will generate another Filing Receipt incorporating the requested corrections**

Applicant(s)

Dominique M. Freeman, La Honda, CA;
Don Alden, Sunnyvale, CA;
Dirk Boecker, Palo Alto, CA;

Assignment For Published Patent Application

Pelikan Technologies, Inc., Palo Alto, CA

Power of Attorney: The patent practitioners associated with Customer Number 77845

Domestic Priority data as claimed by applicant

This application is a CIP of 10/425,815 04/29/2003 ABN
and is a CIP of 10/323,622 12/18/2002 PAT 7,708,701
which is a CIP of 10/127,395 04/19/2002 PAT 7,025,774
This application 10/613,517
is a CIP of 10/237,261 09/05/2002 PAT 7,344,507
and is a CIP of 10/420,535 04/21/2003 PAT 7,258,693
and is a CIP of 10/335,142 12/31/2002 PAT 7,374,544
and is a CIP of 10/423,851 04/24/2003 PAT 7,141,058
and claims benefit of 60/422,988 11/01/2002
and claims benefit of 60/424,429 11/06/2002

Foreign Applications

If Required, Foreign Filing License Granted: 10/01/2003

The country code and number of your priority application, to be used for filing abroad under the Paris Convention, is **US 10/613,517**

Projected Publication Date: Not Applicable

Non-Publication Request: No

Early Publication Request: No
**** SMALL ENTITY ****
Title

Method and apparatus for body fluid sampling and analyte sensing

Preliminary Class

600

PROTECTING YOUR INVENTION OUTSIDE THE UNITED STATES

Since the rights granted by a U.S. patent extend only throughout the territory of the United States and have no effect in a foreign country, an inventor who wishes patent protection in another country must apply for a patent in a specific country or in regional patent offices. Applicants may wish to consider the filing of an international application under the Patent Cooperation Treaty (PCT). An international (PCT) application generally has the same effect as a regular national patent application in each PCT-member country. The PCT process **simplifies** the filing of patent applications on the same invention in member countries, but **does not result** in a grant of "an international patent" and does not eliminate the need of applicants to file additional documents and fees in countries where patent protection is desired.

Almost every country has its own patent law, and a person desiring a patent in a particular country must make an application for patent in that country in accordance with its particular laws. Since the laws of many countries differ in various respects from the patent law of the United States, applicants are advised to seek guidance from specific foreign countries to ensure that patent rights are not lost prematurely.

Applicants also are advised that in the case of inventions made in the United States, the Director of the USPTO must issue a license before applicants can apply for a patent in a foreign country. The filing of a U.S. patent application serves as a request for a foreign filing license. The application's filing receipt contains further information and guidance as to the status of applicant's license for foreign filing.

Applicants may wish to consult the USPTO booklet, "General Information Concerning Patents" (specifically, the section entitled "Treaties and Foreign Patents") for more information on timeframes and deadlines for filing foreign patent applications. The guide is available either by contacting the USPTO Contact Center at 800-786-9199, or it can be viewed on the USPTO website at http://www.uspto.gov/web/offices/pac/doc/general/index.html.

For information on preventing theft of your intellectual property (patents, trademarks and copyrights), you may wish to consult the U.S. Government website, http://www.stopfakes.gov. Part of a Department of Commerce initiative, this website includes self-help "toolkits" giving innovators guidance on how to protect intellectual property in specific countries such as China, Korea and Mexico. For questions regarding patent enforcement issues, applicants may call the U.S. Government hotline at 1-866-999-HALT (1-866-999-4158).

LICENSE FOR FOREIGN FILING UNDER

Title 35, United States Code, Section 184

Title 37, Code of Federal Regulations, 5.11 & 5.15

GRANTED

The applicant has been granted a license under 35 U.S.C. 184, if the phrase "IF REQUIRED, FOREIGN FILING LICENSE GRANTED" followed by a date appears on this form. Such licenses are issued in all applications where the conditions for issuance of a license have been met, regardless of whether or not a license may be required as set forth in 37 CFR 5.15. The scope and limitations of this license are set forth in 37 CFR 5.15(a) unless an earlier license has been issued under 37 CFR 5.15(b). The license is subject to revocation upon written notification. The date indicated is the effective date of the license, unless an earlier license of similar scope has been granted under 37 CFR 5.13 or 5.14.

This license is to be retained by the licensee and may be used at any time on or after the effective date thereof unless it is revoked. This license is automatically transferred to any related applications(s) filed under 37 CFR 1.53(d). This license is not retroactive.

The grant of a license does not in any way lessen the responsibility of a licensee for the security of the subject matter as imposed by any Government contract or the provisions of existing laws relating to espionage and the national security or the export of technical data. Licensees should apprise themselves of current regulations especially with respect to certain countries, of other agencies, particularly the Office of Defense Trade Controls, Department of State (with respect to Arms, Munitions and Implements of War (22 CFR 121-128)); the Bureau of Industry and Security, Department of Commerce (15 CFR parts 730-774); the Office of Foreign AssetsControl, Department of Treasury (31 CFR Parts 500+) and the Department of Energy.

NOT GRANTED

No license under 35 U.S.C. 184 has been granted at this time, if the phrase "IF REQUIRED, FOREIGN FILING LICENSE GRANTED" DOES NOT appear on this form. Applicant may still petition for a license under 37 CFR 5.12, if a license is desired before the expiration of 6 months from the filing date of the application. If 6 months has lapsed from the filing date of this application and the licensee has not received any indication of a secrecy order under 35 U.S.C. 181, the licensee may foreign file the application pursuant to 37 CFR 5.15(b).

UNITED STATES PATENT AND TRADEMARK OFFICE

Commissioner for Patents
United States Patent and Trademark Office
P.O. Box 1450
Alexandria, VA 22313-1450
www.uspto.gov

DARBY & DARBY PC
P O BOX 5257
NEW YORK, NY 10150-5257

COPY MAILED
APR 0 4 2006
OFFICE OF PETITIONS

In re Application of	:
Hisanobu Kanamaru et al	:
Application No. 10/613,523	: DECISION GRANTING PETITION
Filed: July 2, 2003	: UNDER 37 CFR 1.313(c)(2)
Attorney Docket No. 0963/000M888-US0	:

This is a decision on the petition, filed March 31, 2006, under 37 CFR 1.313(c)(2) to withdraw the above-identified application from issue after payment of the issue fee.

The petition is **GRANTED**.

The above-identified application is withdrawn from issue for consideration of a submission under 37 CFR 1.114 (request for continued examination). See 37 CFR 1.313(c)(2).

Petitioner is advised that the issue fee paid on December 5, 2005 in the above-identified application cannot be refunded. If, however, the above-identified application is again allowed, petitioner may request that it be applied towards the issue fee required by the new Notice of Allowance.[1]

Telephone inquiries should be directed to the undersigned at (571) 272-3218.

This matter is being referred to Technology Center AU 3725 for processing of the request for continued examination under 37 CFR 1.114 and for consideration of the Information Disclosure Statement.

Frances Hicks
Frances Hicks
Petitions Examiner
Office of Petitions

C:\Documents and Settings\FHicks\My Documents\470\Apr9\613523.wpd

---

[1] *The request to apply the issue fee to the new Notice may be satisfied by completing and returning the new Part B – Fee(s) Transmittal Form (along with any balance due at the time of submission), which includes the following language thereon: "The Director of the USPTO is requested to apply the Issue Fee and Publication Fee (if any) or to re-apply any previously paid issue fee in the application identified above. Petitioner is advised that, whether a fee is indicated as being due or not, the Issue Fee Transmittal Form* ***must*** *be completed and timely submitted to avoid abandonment. Note the language in bold text on the first page of the Notice of Allowance and Fee(s) Due (PTOL-85).*

UNITED STATES PATENT AND TRADEMARK OFFICE

Commissioner for Patents
United States Patent and Trademark Office
P.O. Box 1450
Alexandria, VA 22313-1450
www.uspto.gov

COPY MAILED

SEP 1 8 2009

OFFICE OF PETITIONS

MARIA A. TREVISAN
WOLF, GREENFIELD & SACKS, P.C.
600 ATLANTIC AVENUE
BOSTON MA 02210

In re Application	:
Arthur M. Krieg et al.	:
Application No. 10/613,524	: DECISION ON APPLICATION
Filed: July 3, 2003	: FOR PATENT TERM ADJUSTMENT
Attorney Docket No.	:
C1037.70042US00	

This is in response to the APPLICATION FOR PATENT TERM ADJUSTMENT UNDER 37 CFR §1.705 filed April 27, 2009. Applicant requests that the determination of patent term adjustment be corrected from 752 days to 1254 days. Applicant requests this correction in part on the basis that the Office will take in excess of three years to issue this patent and in light of the recent court decision in Wyeth v. Dudas, No. 07-1492 (D.D.C. September 30, 2008).

To the extent that this application for patent term adjustment requests reconsideration of the patent term adjustment as it relates to the Office's failure to issue the patent within 3 years of the filing date, the application for patent term adjustment under 37 CFR 1.705(b) is **DISMISSED as PREMATURE**.

Knowledge of the actual date the patent issues is required to calculate the amount, if any, of additional patent term patentees are entitled to for Office failure to issue the patent within three years. See 37 CFR 1.702(b). (This is true even where a request for continued examination (RCE) was filed). The computer will not undertake the § 1.702(b) calculation until the actual date of issuance of the patent has been determined. Likewise, the computer will not calculate any further Office delay under 37 CFR 1.702(a)(4) or applicant delay under 37 CFR 1.704(c)(10) until the actual date of issuance of the patent has been determined. As such, the Office cannot make a determination on the correctness of the patent term adjustment until the patent has issued.

Requesting reconsideration of the patent term adjustment to be indicated on the patent under 37 CFR 1.705(b) based on the initial determination of patent term adjustment

and a projected issuance date of the patent (or even the filing date of the request for continued examination) is premature. Accordingly, it is appropriate to dismiss such a request as premature.

With respect to the over 3 year calculation, rather than file an application for patent term adjustment under 37 CFR 1.705(b) contesting the 37 CFR 1.702(b) calculation at the time of the mailing of the notice of allowance, applicants are advised that they may wait until the time of the issuance of the patent and file a request for reconsideration of the patent term adjustment pursuant to 37 CFR 1.705(d). As the USPTO does not calculate the amount of time earned pursuant to 37 CFR 1.702(b) until the time of the issuance of the patent, the Office will consider any request for reconsideration of the patent term adjustment due to an error in the calculation of 37 CFR 1.702(b) to be timely if the request for reconsideration is filed within two months of the issuance of the patent. However, as to all other bases for contesting the initial determination of patent term adjustment received with the notice of allowance, applicants must timely file an application for patent term adjustment prior to the payment of the issue fee.

To the extent that applicant otherwise requests correction of the patent term adjustment at the time of the mailing of the Notice of Allowance, the application for patent term adjustment is **GRANTED**.

The Office has updated the PALM screen to reflect that the correct Patent Term Adjustment (PTA) determination at the time of the mailing of the Notice of Allowance is six hundred seventy eight **(678)** days. A copy of the updated PALM screen, showing the correct determination, is enclosed.

On January 27, 2009, the Office mailed the Determination of Patent Term Adjustment under 35 U.S.C. 154(b) in the above-identified application. The Notice stated that the patent term adjustment to date is 752 days. The instant application for patent term adjustment was timely filed[1] on or before payment of the issue fee.

With respect to the patent term adjustment at the time of the mailing of the notice of allowance, applicants acknowledge the period of adjustment of 941 days for Office delay.

Applicants argue that following the submission of the RCE on October 30, 2008, Applicant filed a series of Information Disclosure Statements on December 10, 2008, December 22, 2008 and on January 12, 2009, resulting in delays of 41 days (period from 10/31/2008 to 12/10/2008), 53 days (period from 10/31/2008 to 12/22/2008), and 74 days (period from 10/31/2008 to 01/12/2009) for applicant delay. See 37 CFR § 1.704(c)(8).

[1] PALM records indicate that the issue fee was paid on April 27, 2009.

Applicant's argument is persuasive. A period of reduction should be entered for the Information Disclosure Statements (IDS) filed December 10, 2008, December 22, 2008 and January 12, 2009. The period of reduction pursuant to 37 CFR 1.704(c)(8) for filing the IDSs without a 1.704(d) statement after the request for continued examination is 74 days, counting the number of days in the period beginning on the day after the initial reply (the RCE) was filed, October 31, 2008 and ending on the date of filing of the last supplemental paper, the IDS filed January 12, 2009. Accordingly, a period of reduction of 74 days is being entered.

It is noted that under the circumstances entry of a period of reduction for the filing of the interview summary filed January 20, 2009 is not warranted.

In view thereof, the patent term adjustment at the time of the mailng of the notice of allowance is six hundred seventy-eight (678) days.

The Office acknowledges submission of the $200.00 fee set forth in 37 CFR 1.18(e). No additional fees are required.

Applicants are reminded that any delays by the Office pursuant to 37 CFR 1.702(a)(4) and 1.702(b) and any applicant delays under 37 CFR 1.704(c)(10) will be calculated at the time of the issuance of the patent and applicants will be notified of the revised patent term adjustment to be indicated on the patent in the Issue Notification letter that is mailed to applicants approximately three weeks prior to issuance.

The Office of Data Management has been advised of this decision. This matter is being referred to the Office of Data Management for issuance of the patent.

Telephone inquiries specific to this decision should be directed to Senior Petitions Attorney Patricia Faison-Ball at (571) 272-3212.

Nancy Johnson for

Kery A. Fries
Senior Legal Advisor
Office of Patent Legal Administration
Office of Deputy Commissioner
for Examination Policy

Enclosure: Copy of Revised PALM Screen

Day : Thursday
Date: 9/17/2009

PALM INTRANET

Time: 17:23:10

PTA Calculations for Application: 10/613524			
Application Filing Date:	07/03/2003	PTO Delay (PTO):	941
Issue Date of Patent:		Three Years:	0
Pre-Issue Petitions:	0	Applicant Delay (APPL):	189
Post-Issue Petitions:	0	Total PTA (days):	678
PTO Delay Adjustment:	-74		

File Contents History

Number	Date	Contents Description	PTO	APPL	START
94	09/17/2009	ADJUSTMENT OF PTA CALCULATION BY PTO		74	
81	01/27/2009	MAIL NOTICE OF ALLOWANCE			
80	01/22/2009	ISSUE REVISION COMPLETED			
79	01/22/2009	DOCUMENT VERIFICATION			
78	01/21/2009	NOTICE OF ALLOWANCE DATA VERIFICATION COMPLETED			
77	01/21/2009	CASE DOCKETED TO EXAMINER IN GAU			
76	01/21/2009	EXAMINER'S AMENDMENT COMMUNICATION			
75	01/21/2009	NOTICE OF ALLOWABILITY			
74	01/12/2009	EXAMINER INTERVIEW SUMMARY RECORD (PTOL - 413)			
73	12/22/2008	INFORMATION DISCLOSURE STATEMENT (IDS) FILED			
72	12/10/2008	REFERENCE CAPTURE ON IDS			
71	12/10/2008	INFORMATION DISCLOSURE STATEMENT (IDS) FILED			
70	12/22/2008	INFORMATION DISCLOSURE STATEMENT CONSIDERED			
69	12/10/2008	INFORMATION DISCLOSURE STATEMENT CONSIDERED			
68	12/22/2008	INFORMATION DISCLOSURE STATEMENT (IDS) FILED			
67	12/10/2008	INFORMATION DISCLOSURE STATEMENT (IDS) FILED			
66	11/17/2008	DATE FORWARDED TO EXAMINER			
65	10/30/2008	AMENDMENT SUBMITTED/ENTERED WITH FILING OF CPA/RCE			
64	11/17/2008	DATE FORWARDED TO EXAMINER			

63	10/30/2008	REQUEST FOR CONTINUED EXAMINATION (RCE)		92	59
62	11/17/2008	DISPOSAL FOR A RCE/CPA/129 (EXPRESS ABANDONMENT IF CPA)			
61	10/30/2008	REQUEST FOR EXTENSION OF TIME - GRANTED			
60	10/30/2008	WORKFLOW - REQUEST FOR RCE - BEGIN			
59	04/30/2008	MAIL FINAL REJECTION (PTOL - 326)			
58	04/28/2008	FINAL REJECTION			
57	02/12/2008	DATE FORWARDED TO EXAMINER			
56	01/02/2008	RESPONSE AFTER NON-FINAL ACTION		97	54
55	01/02/2008	REQUEST FOR EXTENSION OF TIME - GRANTED			
54	06/27/2007	MAIL NON-FINAL REJECTION			
53	06/11/2007	NON-FINAL REJECTION			
52	04/29/2004	INFORMATION DISCLOSURE STATEMENT CONSIDERED			
51	10/27/2004	INFORMATION DISCLOSURE STATEMENT CONSIDERED			
50	03/21/2005	INFORMATION DISCLOSURE STATEMENT CONSIDERED			
49	12/08/2006	INFORMATION DISCLOSURE STATEMENT CONSIDERED			
48	05/18/2007	DATE FORWARDED TO EXAMINER			
47	05/07/2007	RESPONSE TO ELECTION / RESTRICTION FILED			
46	04/02/2007	MAIL RESTRICTION REQUIREMENT	941		-1
45	03/29/2007	REQUIREMENT FOR RESTRICTION / ELECTION			
44	12/08/2006	REFERENCE CAPTURE ON IDS			
43.7	12/08/2006	INFORMATION DISCLOSURE STATEMENT (IDS) FILED			
43	12/08/2006	INFORMATION DISCLOSURE STATEMENT (IDS) FILED			
42	11/01/2006	MISCELLANEOUS INCOMING LETTER			
41	07/27/2006	PRELIMINARY AMENDMENT			
40	08/01/2006	ERROR(S) IN CRF CORRECTED BY STIC			
39	06/22/2006	MAIL LETTER REQUIRING CRF (UNREADABLE, NON-COMPLIANT, NOT SUBMITTED)			
38	06/20/2006	CRF DISKETTE UNREADABLE / DID NOT COMPLY / REQUIRED BUT NOT SUBMITTED			
37	06/15/2006	CASE DOCKETED TO EXAMINER IN GAU			

36	04/05/2006	CASE DOCKETED TO EXAMINER IN GAU			
35	12/01/2005	IFW TSS PROCESSING BY TECH CENTER COMPLETE			
34.7	03/21/2005	INFORMATION DISCLOSURE STATEMENT (IDS) FILED			
34	03/21/2005	INFORMATION DISCLOSURE STATEMENT (IDS) FILED			
33	10/27/2004	REFERENCE CAPTURE ON IDS			
32.7	10/27/2004	INFORMATION DISCLOSURE STATEMENT (IDS) FILED			
32	10/27/2004	INFORMATION DISCLOSURE STATEMENT (IDS) FILED			
31	08/31/2004	CASE DOCKETED TO EXAMINER IN GAU			
30	04/29/2004	REFERENCE CAPTURE ON IDS			
29.7	04/29/2004	INFORMATION DISCLOSURE STATEMENT (IDS) FILED			
29	04/29/2004	INFORMATION DISCLOSURE STATEMENT (IDS) FILED			
28	06/25/2004	RECEIPT OF ALL ACKNOWLEDGEMENT LETTERS			
27	04/29/2004	NEW OR ADDITIONAL DRAWING FILED			
26	05/03/2004	RECEIPT OF ACKNOWLEDGMENT LETTER			
25	01/27/2004	APPLICATION RETURN FROM OIPE			
24	01/27/2004	APPLICATION RETURN TO OIPE			
23	01/27/2004	APPLICATION DISPATCHED FROM OIPE			
22	01/28/2004	APPLICATION IS NOW COMPLETE			
21	01/12/2004	PAYMENT OF ADDITIONAL FILING FEE/PREEXAM			
19	07/03/2003	CLAIM PRELIMINARY AMENDMENT			
17	01/12/2004	A STATEMENT BY ONE OR MORE INVENTORS SATISFYING THE REQUIREMENT UNDER 35 USC 115, OATH OF THE APPLIC			
16	11/12/2003	RECEIPT OF ACKNOWLEDGMENT LETTER			
15	11/12/2003	NOTICE MAILED--APPLICATION INCOMPLETE--FILING DATE ASSIGNED			
12	10/27/2003	AGENCY REFERRAL LETTER MAILED			
11	10/09/2003	AGENCY REFERRAL LETTER MAILED			
10	10/09/2003	AGENCY REFERRAL LETTER MAILED			
9	10/08/2003	REFERRED BY L&R FOR THIRD-LEVEL SECURITY REVIEW. AGENCY REFERRAL LETTER GENERATED			

8	10/08/2003	REFERRED BY L&R FOR THIRD-LEVEL SECURITY REVIEW. AGENCY REFERRAL LETTER GENERATED			
7	10/08/2003	REFERRED BY L&R FOR THIRD-LEVEL SECURITY REVIEW. AGENCY REFERRAL LETTER GENERATED			
6	10/07/2003	CASE CLASSIFIED BY OIPE			
5	10/07/2003	REFERRED TO LEVEL 2 (LARS) BY OIPE CSR			
4	08/12/2003	IFW SCAN & PACR AUTO SECURITY REVIEW			
3	08/06/2003	CRF IS GOOD TECHNICALLY / ENTERED INTO DATABASE			
2	07/03/2003	CRF DISK HAS BEEN RECEIVED BY PREEXAM / GROUP / PCT			
1	07/03/2003	INITIAL EXAM TEAM NN			

Search Another: Application# Search

EXPLANATION OF PTA CALCULATION

EXPLANATION OF PTE CALCULATION

To go back, right click here and select Back. To go forward, right click here and select Forward. To refresh, right click here and select Refresh.

Back to OASIS | Home page

SPE RESPONSE FOR CERTIFICATE OF CORRECTION

Paper No.: _____

DATE : November 17, 2009

TO SPE OF : ART UNIT 1645 - SPE Robert D. Mondesi.

SUBJECT : Request for Certificate of Correction for Appl. No.: 10/613,524 Patent No.: 7,605,138 B2

Please respond to this request for a certificate of correction within 7 days.

FOR IFW FILES:

Please review the requested changes/corrections as shown in the **COCIN** document(s) in the IFW application image. No new matter should be introduced, nor should the scope or meaning of the claims be changed.

Please complete the response (see below) and forward the completed response to scanning using document code **COCX**.

FOR PAPER FILES:

Please review the requested changes/corrections as shown in the attached certificate of correction. Please complete this form (see below) and forward it with the file to:

Certificates of Correction Branch (CofC)
Randolph Square Building
2800 South Randolph Street
Arlington, VA 22206

Antonio Johnson

Certificates of Correction Branch

(571)272-0483

Thank You For Your Assistance

The request for issuing the above-identified correction(s) is hereby:
Note your decision on the appropriate box.

- ☒ **Approved** — **All** changes apply.
- ☐ **Approved in Part** — Specify below which changes **do not** apply.
- ☐ **Denied** — State the reasons for denial below.

Comments: _____

ROBERT MONDESI
SUPERVISORY PATENT EXAMINER

1645

UNITED STATES PATENT AND TRADEMARK OFFICE

UNITED STATES DEPARTMENT OF COMMERCE
United States Patent and Trademark Office
Address: COMMISSIONER FOR PATENTS
P.O. Box 1450
Alexandria, Virginia 22313-1450
www.uspto.gov

Maria A. Trevisan
Wolf, Greenfield & Sacks, P.C.
600 Atlantic Avenue
Boston, MA 02210

Mail Date: 04/22/2010

Applicant	: Arthur M. Krieg	: DECISION ON REQUEST FOR
Patent Number	: 7605138	: RECALCULATION of PATENT
Issue Date	: 10/20/2009	: TERM ADJUSTMENT IN VIEW
Appliction No	: 10/613,524	: OF WYETH AND NOTICE OF INTENT TO
Filed	: 07/03/2003	: ISSUE CERTIFICATE OF CORRECTION
		:

The Request for Recalculation is **GRANTED** to the extent indicated.

The patent term adjustment has been determined to be **1830** days. The USPTO will *sua sponte* issue a certificate of correction reflecting the amount of PTA days determined by the recalculation.

Prior to the issuance of the certificate of correction, the USPTO will afford patentee an opportunity to be heard and request reconsideration. Accordingly, patentee has **one month or thirty (30) days**, whichever is longer, to file a request for reconsideration of this patent term adjustment calculation. See 35 U.S.C. 154(b)(3)(B)(ii) and 37 CFR 1.322(a)(4). No extensions of time will be granted under 37 CFR 1.136.

Patentee should use document code PET.OP if electronically filing a request for reconsideration of this patent term adjustment calculation. The patentee must also include the information required by 37 CFR 1.705(b)(2) and the fee required by 37 CFR 1.18(e). If patentee does not file a timely request for reconsideration of this patent term adjustment calculation including the information required by 37 CFR 1.705(b)(2) and the fee required by 37 CFR 1.18(e), the USPTO will issue a certificate of correction reflecting the PTA determination noted above.

Patentee should be aware that in order to preserve the right to review in the United States District Court for the District of Columbia of the USPTO patent term adjustment determination, patentee must ensure that he or she also take the steps required under 35 U.S.C. 154(b)(4)(A) in a timely manner. Nothing in the request for recalculation should be construed as providing an alternative time frame for commencing a civil action under 35 U.S.C. 154(b)(4)(A).

Any questions concerning this decision should be directed to the Office of Patent Legal Administration at 571-272-7702.

UNITED STATES PATENT AND TRADEMARK OFFICE

Commissioner for Patents
United States Patent and Trademark Office
P.O. Box 1450
Alexandria, VA 22313-1450
www.uspto.gov

MAILED

APR 19 2010

OFFICE OF PETITIONS

MARIA A. TREVISAN
WOLF, GREENFIELD & SACKS, P.C.
600 ATLANTIC AVENUE
BOSTON MA 02210

In re Patent No. 7,605,138
Issued: October 20 2009
Application No. 10/613,524
Filed: July 3, 2003
Attorney Docket No. C1037.70042US00

:DECISION ON REQUEST
: FOR RECONSIDERATION
: OF PATENT TERM ADJUSTMENT
: AND
: NOTICE OF INTENT TO ISSUE
: CERTIFICATE OF CORRECTION

This is in response to the REQUEST FOR RECONSIDERATION OF PATENT TERM ADJUSTMENT UNDER 37 CFR §I.705(D) filed December 18, 2009. Applicant requests that the determination of patent term adjustment be corrected from 732 days to 1309 days. Applicant requests this correction in part on the basis that the Office will take in excess of three years to issue this patent and in light of the recent court decision in Wyeth v. Dudas, No. 07-1492 (D.D.C. September 30, 2008).

The petition to correct the patent term adjustment indicated on the above-identified patent to indicate that the term of the above-identified patent is extended or adjusted by one thousand two hundred fifty-four (1254) days is **GRANTED to the extent indicated herein**.

At the outset, patentees have miscalculated the total patent term examination. The period of examination delay, "A" delay", pursuant to 37 CFR 1.702(a)(1) is 941 days. As the period from the filing date of the request for continued examination (RCE) to the issue date of the patent is not included in the "B" delay period, the over three year period begins on July 3, 2006 and ends on October 29, 2008, the day before the RCE was filed, and the B delay considering the 273 days of overlap is 849 (not 850) days. See 35 U.S.C. 154(b)(1)(B)(i). Non-overlapping B delay is 576 days.

Additionally, see the decision dated September 18, 2009 which noted that a period of reduction should have been entered for the Information Disclosure Statements (IDS) filed December 10, 2008, December 22, 2008 and January 12, 2009. The period of reduction pursuant to 37 CFR 1.704(c)(8) for filing the IDSs without a 1.704(d) statement after the request for continued examination is 74 days, counting the number of days in the period beginning on the day after the initial reply (the RCE) was filed, October 31, 2008 and ending on the date of filing of the last supplemental paper, the

IDS filed January 12, 2009. Accordingly, the patent term adjustment is 1254 (941 days "A delay" plus 849 days "B delay" minus 273 days overlap minus 263 days applicant delay), not 1309 days.

The Office will *sua sponte* issue a certificate of correction. Pursuant to 37 CFR 1.322, the Office will not issue a certificate of correction without first providing assignee or patentee an opportunity to be heard. Accordingly, patentees are given **one (1) month or thirty (30) days**, whichever is longer, from the mail date of this decision to respond. No extensions of time will be granted under § 1.136.

The application is being forwarded to the Certificates of Branch for issuance of a certificate of correction. The Office will issue a certificate of correction indicating that the term of the above-identified patent is extended or adjusted by **one thousand two hundred fifty-four (1254)** days.

Telephone inquiries specific to this decision should be directed to Senior Petitions Attorney Patricia Faison-Ball at (571) 272-3212.

/Kery A. Fries/

Kery A. Fries
Senior Legal Advisor
Office of Patent Legal Administration
Office of Deputy Commissioner
for Examination Policy

Enclosure: Copy of DRAFT Certificate of Correction

DRAFT

UNITED STATES PATENT AND TRADEMARK OFFICE

CERTIFICATE OF CORRECTION

PATENT : 7,605,138 B2

DATED : October 20, 2009

INVENTOR(S) : Arthur M. Krieg

It is certified that error appears in the above-identified patent and that said Letters Patent is hereby corrected as shown below:

On the cover page,

[*] Notice: Subject to any disclaimer, the term of this patent is extended or adjusted under 35 USC 154(b) by (732) days

Delete the phrase "by 732 days" and insert – by 1254 days--

UNITED STATES PATENT AND TRADEMARK OFFICE

Commissioner for Patents
United States Patent and Trademark Office
P.O. Box 1450
Alexandria, VA 22313-1450
www.uspto.gov

JOSEPH E. CASTERLINE
4839 E. RAIL - N ROAD
TUCSON AZ 85739

COPY MAILED

NOV 03 2005

OFFICE OF PETITIONS

ON PETITION

In re Application of
Joseph Edward Casterline
Application No. 10/612,526
Filed: July 2, 2003
Title of Invention: **HYDRAULIC CONTROL SYSTEM FOR A VARIABLE COMPRESSION RATIO INTERNAL COMBUSTION ENGINE**

This is a decision on the petition filed July 6, 2005 under 37 CFR 1.137(b),[1] to revive the above-identified application.

The petition under 37 CFR 1.137 (b) is **GRANTED**.

This application became abandoned June 3, 2005 for failure to timely pay the issue fee on or before June 2, 2005. The instant petition and this decision precede the mailing of the Notice of Abandonment.

The issue fee, petition fee and publication fee have been applied. All other requirements of 37 CFR 1.137(b) having now been met, this application file is being forwarded to the Publishing Division to be processed into a patent.

Telephone inquiries concerning this matter may be directed to the undersigned Petitions Attorney at (571) 272-3212.

Patricia Faison-Ball
Senior Petitions Attorney
Office of Petitions

---

[1] Effective December 1, 1997, the provisions of 37 CFR 1.137(b) now provide that where the delay in reply was unintentional, a petition may be filed to revive an abandoned application or a lapsed patent pursuant to 37 CFR 1.137(b). A grantable petition filed under the provisions of 37 CFR 1.137(b) must be accompanied by:

(1) the required reply, unless previously filed. In a nonprovisional application abandoned for failure to prosecute, the required reply may be met by the filing of a continuing application. In a nonprovisional application filed on or after June 8, 1995, and abandoned for failure to prosecute, the required reply may also be met by the filing of a request for continued examination in compliance with § 1.114. In an application or patent, abandoned or lapsed for failure to pay the issue fee or any portion thereof, the required reply must be the payment of the issue fee or any outstanding balance thereof.

(2) the petition fee as set forth in 37 CFR 1.17(m);

(3) a statement that the entire delay in filing the required reply from the due date for the reply until the filing of a grantable petition pursuant to 37 CFR 1.137(b) was unintentional. The Commissioner may required additional information where there is a question whether the delay was unintentional; and

(4) any terminal disclaimer (and fee as set forth in 37 CFR 1.20(d)) required pursuant to 37 CFR 1.137(c)).

UNITED STATES PATENT AND TRADEMARK OFFICE

Commissioner for Patents
United States Patent and Trademark Office
P.O. Box 1450
Alexandria, VA 22313-1450
www.uspto.gov

COATS & BENNETT, PLLC
PO BOX 5
RALEIGH NC 27602

COPY MAILED
SEP 19 2006
OFFICE OF PETITIONS

In re Application of
Stevens et al.
Application No. 10/613,548
Filed: July 3, 2003
Attorney Docket No. 5142-001

DECISION ON PETITION

This is a decision on the petition under 37 CFR 1.137(b), filed March 29, 2006, to revive the above-identified application.

The above-identified application became abandoned for failure to file a timely response to the nonfinal Office Action, mailed September 13, 2005, which set a three-month shortened statutory period for reply. The above-identified application became abandoned on December 14, 2005. A Notice of Abandonment was mailed on March 24, 2006.

Petitioner has met the requirements to revive the above-identified application pursuant to 37 CFR 1.137(b). Petitioner submitted the required reply in the form of an amendment, paid the petition fee, and made the proper statement of unintentional delay. Accordingly, the petition is **granted.**

Pursuant to 37 CFR 1.136, a request for an extension of time must be filed prior to the expiration of the maximum period obtainable for reply to avoid abandonment. Accordingly, the $510.00 extension of time fee will be credited to petitioner's Deposit Account.

This matter is being referred to Technology Center Art Unit 3632.

Telephone inquiries specific to this decision may be directed to the undersigned at (571) 272-3211. All other inquiries concerning the examination procedures or status of the application should be directed to the Technology Center.

C. T. Donnell

Christina Tartera Donnell
Senior Petitions Attorney
Office of Petitions

UNITED STATES PATENT AND TRADEMARK OFFICE

Commissioner for Patents
United States Patent and Trademark Office
P.O. Box 1450
Alexandria, VA 22313-1450
www.uspto.gov
DIW 09-04

COPY MAILED

SEP 2 2 2004

OFFICE OF PETITIONS

OSTROLENK, FABER, GERB & SOFFEN, LLP
1180 AVENUE OF THE AMERICAS
NEW YORK NY 10036-8403

In re Application of	:
Gerry Quinn	: DECISION GRANTING PETITION
Application No. 10/613,570	:
Filed: 3 June, 2003	:
Attorney's Docket No. P/3771-6	:

This is a decision on the petition filed on 18 August, 2004, styled under 37 CFR 1.182 and 1.183, which is being treated as a petition under 37 CFR 1.183 to waive the requirement for an extension of time fee with regard to the response filed on 18 August, 2004, to the Notice to File Corrected Application Papers mailed on 13 April, 2004, which set a two (2) month period for reply.

The petition is **DISMISSED** as inappropriate.

Petitioner states that the Notice mailed on 13 April, 2004, was not received by petitioners until 12 August, 2004. Petitioner has submitted a reply to the Notice, accompanied by a two (2) month extension of time. Petitioner requests, however, that the extension of time fee be waived and refunded.

37 CFR 1.183 states:

> In an extraordinary situation, when justice requires, any requirement of the regulations in this part which is not a requirement of the statutes may be suspended or waived by the Commissioner or the Commissioner's designee, *sua sponte*, or on petition of the interested party, subject to such other requirements as may be imposed.

However, the PTO will not normally consider an extraordinary remedy, when the rules already provide an avenue for obtaining the relief sought.[1]

---

[1] See Cantello v. Rasmussen, 220 USPQ 664, 664 (Comm'r Pat. 1982).

Here, as the statutes and regulations provide petitioners with the means for requesting that the Office reset the period of reply when an Office communication is not timely received.[2] As such, it is not necessary to also fashion an extraordinary remedy, even assuming such would constitute a proper exercise of the rules. The petition is therefore dismissed.

As the $130.00 petition fee is a prerequisite for the filing of a petition under 37 CFR 1.183, the petition fee has been charged to counsel's deposit account and will not be refunded.

It is noted that the Notice to File Corrected Application Papers was mailed by the Office of Initial Patent Examination (OIPE). OIPE has the authority to decide petitions to withdraw the holding of abandonment where OIPE mailed the Notice of Abandonment.[3] Therefore, OIPE also has the authority to reset the period for reply, and refund any extension of time fee, if appropriate, where late receipt of a Notice mailed by OIPE is alleged.

The application will be forwarded to the Office of Initial Patent Examination (OIPE) for consideration of the present petition under 37 CFR 1.181.

Telephone inquiries concerning this matter may be directed to the undersigned at 703.308.6918.

D Wood

Douglas I. Wood
Senior Petitions Attorney
Office of Petitions

---

[2] See MPEP 710.06(I) and (II).

[3] MPEP 1002.02(q)(6).

UNITED STATES PATENT AND TRADEMARK OFFICE

UNITED STATES DEPARTMENT OF COMMERCE
United States Patent and Trademark Office
Address: COMMISSIONER FOR PATENTS
P.O. Box 1450
Alexandria, Virginia 22313-1450
www.uspto.gov

Patrick W. Rasche
Armstrong Teasdale LLP
Suite 2600
One Metropolitan Square
St. Louis, MO 63102

Mail Date: 04/21/2010

Applicant	: David Henry Gurr	: DECISION ON REQUEST FOR
Patent Number	: 7603156	: RECALCULATION of PATENT
Issue Date	: 10/13/2009	: TERM ADJUSTMENT IN VIEW
Appliction No	: 10/613,580	: OF WYETH AND NOTICE OF INTENT TO
Filed	: 07/02/2003	: ISSUE CERTIFICATE OF CORRECTION
		:

The Request for Recalculation is **GRANTED** to the extent indicated.

The patent term adjustment has been determined to be **1203** days. The USPTO will *sua sponte* issue a certificate of correction reflecting the amount of PTA days determined by the recalculation.

Prior to the issuance of the certificate of correction, the USPTO will afford patentee an opportunity to be heard and request reconsideration. Accordingly, patentee has **one month or thirty (30) days**, whichever is longer, to file a request for reconsideration of this patent term adjustment calculation. See 35 U.S.C. 154(b)(3)(B)(ii) and 37 CFR 1.322(a)(4). No extensions of time will be granted under 37 CFR 1.136.

Patentee should use document code PET.OP if electronically filing a request for reconsideration of this patent term adjustment calculation. The patentee must also include the information required by 37 CFR 1.705(b)(2) and the fee required by 37 CFR 1.18(e). If patentee does not file a timely request for reconsideration of this patent term adjustment calculation including the information required by 37 CFR 1.705(b)(2) and the fee required by 37 CFR 1.18(e), the USPTO will issue a certificate of correction reflecting the PTA determination noted above.

Patentee should be aware that in order to preserve the right to review in the United States District Court for the District of Columbia of the USPTO patent term adjustment determination, patentee must ensure that he or she also take the steps required under 35 U.S.C. 154(b)(4)(A) in a timely manner. Nothing in the request for recalculation should be construed as providing an alternative time frame for commencing a civil action under 35 U.S.C. 154(b)(4)(A).

Any questions concerning this decision should be directed to the Office of Patent Legal Administration at 571-272-7702.

UNITED STATES PATENT AND TRADEMARK OFFICE

Commissioner for Patents
United States Patent and Trademark Office
P.O. Box 1450
Alexandria, VA 22313-1450
www.uspto.gov

MANATT PHELPS AND PHILLIPS
ROBERT D. BECKER
1001 PAGE MILL ROAD, BUILDING 2
PALO ALTO CA 94304

COPY MAILED

MAR 1 2 2008

OFFICE OF PETITIONS

In re Application of	:	
WAUGH, Jacob et al.	:	
Application No. 10/613,584	:	DECISION ON PETITION
Filed: July 02, 2003	:	TO WITHDRAW
Attorney Docket No. **25040-031**	:	FROM RECORD

This is a decision on the Request to Withdraw as attorney or agent of record under 37 C.F.R. § 1.36(b), filed November 26, 2007.

The request is **APPROVED**.

A grantable request to withdraw as attorney/agent of record must be signed by every attorney/agent seeking to withdraw or contain a clear indication that one attorney is signing on behalf of another/others. A request to withdraw will not be approved unless at least 30 (thirty) days would remain between the date of approval and the later of the expiration date of a time to file a response or the expiration date of the maximum time period which can be extended under 37 C.F.R. § 1.136(a).

The request was signed by Shawn Hansen on behalf of all attorneys of record who are associated with customer No. 36614. All attorneys/agents associated have been withdrawn. Applicant is reminded that there is no attorney of record at this time.

All future correspondence will be directed to the second named inventor Mahmood Razavi at the address indicated below.

Telephone inquiries concerning this decision should be directed to Tredelle Jackson at 571-272-2783.

Tredelle D. Jackson
Petitions Examiner
Office of Petitions

cc: **MAHMOOD RAZAVI**
14 LAURELWOOD
IRVINE, CA 92620

UNITED STATES PATENT AND TRADEMARK OFFICE

Commissioner for Patents
United States Patent and Trademark Office
P.O. Box 1450
Alexandria, VA 22313-1450
www.uspto.gov

ROSS J. OEHLER
AVENTIS PHARMACEUTICALS INC.
ROUTE 202-206
MAIL CODE: D303A
BRIDGEWATER NJ 08807

COPY MAILED

JUN 22 2004

OFFICE OF PETITIONS

In re Application of	:	
Majid et al.	:	
Application No. 10/613,588	:	DECISION DISMISSING
Filed: July 5, 2003	:	PETITION
Attorney Docket No. USAV2003/0110	:	
US NP		

This is a decision on the petition under 37 CFR 1.10, filed October 10, 2003, requesting that the above-identified application be accorded a filing date of July 3, 2003, rather than the presently accorded filing date of July 7, 2003.

Petitioner asserted that petitioner deposited the above-identified application with the USPS using "Express Mail Service" on July 3, 2003, as evidenced by the signed certificate of mailing. In addition, petitioner noted that petitioner filed two related applications with the USPTO on the same day of July 3, 2003, using the same USPS Express Mail Service in two separate packages, both of which were assigned the correct filing date of July 3, 2003.

It is unclear from the petition if petitioner is alleging that there is a discrepancy between the filing date accorded by the United States Patent and Trademark Office (USPTO) and the date-in entered by the United States Patent and Trademark Office (USPS) (37 CFR 1.10(c)) or that the date-in was incorrectly entered by the USPS (37 CFR 1.10(d)). Therefore, the Office will treat this petition under both 37 CFR 1.10(c) and (d).

Paragraph (a) of 37 CFR 1.10 states that:

> Any correspondence received by the Patent and Trademark Office (Office) that was delivered by the "Express Mail Post Office to Addressee" service of the

> United States Postal Service (USPS) will be considered filed in the Office on the date of deposit with the USPS. The date of deposit with the USPS is shown by the "date-in" on the "Express Mail" mailing label or other official USPS notation. If the USPS deposit date cannot be determined, the correspondence will be accorded the Office receipt date as the filing date. See §1.6(a) (Emphasis added).

Consideration under 37 CFR 1.10(c)

Paragraph (c) of 37 CFR 1.10 states that:

> Any person filing correspondence under this section that was received by the Office and delivered by the "Express Mail Post Office to Addressee" service of the USPS, who can show a discrepancy between the filing date accorded by the Office to the correspondence and the date of deposit as shown by the "date-in" on the "Express Mail" mailing label or other official USPS notation, may petition the Commissioner to accord the correspondence a filing date as of the "date-in" on the "Express Mail" mailing label or other official USPS notation, provided that:
>
> (1) The petition is filed promptly after the person becomes aware that the Office has accorded, or will accord, a filing date other than the USPS deposit date;
>
> (2) The number of the "Express Mail" mailing label was placed on the paper(s) or fee(s) that constitute the correspondence prior to the original mailing by "Express Mail;" and
>
> (3) The petition includes a true copy of the "Express Mail" mailing label showing the "date-in," and of any other official notation by the USPS relied upon to show the date of deposit.

The present petition lacks the showing required by item (3) above. The "date-in" on the "Express Mail" mailing label No. EL816576588US is blank. Further, petitioner failed to provide any other official notation by the USPS to show the date of deposit as July 3, 2003.

Consideration under 37 CFR 1.10(d)

Paragraph (d) of 37 CFR 1.10 states that:

> Any person filing correspondence under this section that was received by the Office and delivered by the "Express Mail Post Office to Addressee" service of the USPS, who can show that the "date-in" on the "Express Mail" mailing label or other official notation entered by the USPS was incorrectly entered or omitted by the USPS, may petition the Commissioner to accord the correspondence a filing date as of the date the correspondence is shown to have been deposited with the USPS provided that:
>
> (1) The petition is filed promptly after the person becomes aware that the Office has accorded, or will accord, a filing date based upon an incorrect entry by the USPS;
>
> (2) The number of the "Express Mail" mailing label was placed on the paper(s) and fee(s) that constitute the correspondence prior to the original mailing by "Express Mail;" and
>
> (3) The petition includes a showing, which establishes, to the satisfaction of the Commissioner, that the requested filing date was the date the correspondence was deposited in "Express Mail Post Office to Addressee" service prior to the last scheduled pickup for that day. Any showing pursuant to this paragraph must be corroborated by evidence from the USPS or that came into being after deposit and within one business day of the deposit of the correspondence in the "Express Mail Post Office to Addressee" service of the USPS.

The present petition lacks the showing required by item (3) above.

Initially, the Office notes:

> Correspondence should be deposited directly with an employee of the USPS to ensure that the person depositing the correspondence receives a legible copy of the "Express Mail" mailing label with the "date-in"

> clearly marked. Persons dealing indirectly with the employees of the USPS (such as by deposit in an "Express Mail" drop box) do so at the risk of not receiving a copy of the "Express Mail" mailing label with the desired "date-in" clearly marked. The paper(s) or fee(s) that constitute the correspondence should also include the "Express Mail" mailing label number thereon.

37 CFR 1.10(b).

A grantable petition under 37 CFR 1.10(d) must include "a showing which establishes, to the satisfaction of the Commissioner, that the requested filing date was the date the correspondence was deposited in 'Express Mail Post Office to Addressee' service prior to the last scheduled pickup for that day." In addition, the showing "must be corroborated by evidence from the USPS or that came into being after deposit and within one business day of the deposit of the correspondence in the 'Express Mail Post Office to Addressee' service of the USPS." Evidence from the USPS may be, for example, the Express Mail Corporate Account Mailing Statement or a statement by an appropriate official of the USPS that according to a USPS record the "date-in" on petitioner's Express Mail receipt is erroneous, accompanied by a copy of the relevant USPS record. Evidence that came into being within one day after the deposit of the correspondence as Express Mail may be, for example, a log book which contains information such as the Express Mail label number; the application number, attorney docket number or other such file identification number; the place, date and time of deposit; the time of the last scheduled pick-up for that date and place of deposit; the depositor's initials or signature; and the date and time of the log book entry.

In support of petitioner's assertion, petitioner submitted a copy of the USPS Track & Confirm sheet, which indicated that a package bearing Express Mail label No. EL816576588US was delivered to the USPTO and received by R. Atiati at 11:09 am on July 5, 2003. Additionally, petitioner attempted to demonstrate that the above-identified application was deposited with the USPS on July 3, 2003, because petitioner filed two related application with the USPTO on the same day of July 3, 2003, using the same USPS Express Mail Service in two separate packages. The Track & Confirm sheets for these related applications indicated that they were received by R. Atiati of the USPTO on July 5, 2003, and were assigned the filing dates of July 3, 2003. However, the fact that the USPTO accorded two related application the filing date of July 3, 2003, has no bearing on this matter. The filing date for each application must be established based on direct evidence relating to each specific application.

The Office notes that petitioner bears the burden to prove that the "date-in" was incorrectly entered on the "Express Mail" mailing label. Petitioner has not provided any direct evidence of the delivery of the present application to the USPS on July 3, 2003. If the USPS deposit date cannot be determined, the correspondence will be accorded the date of receipt in the USPTO as the filing date. See MPEP 513. Therefore, absent evidence from the USPS or that came into being after deposit and within one business day of the deposit of the correspondence in the "Express Mail" service, which corroborates the allegation that the application was, in fact, deposited with the USPS on July 3, 2003, before the last scheduled pick-up for that day, the application will be accorded the date of receipt in the USPTO, July 5, 2003.

Accordingly, the petition is **dismissed**.

Any request for reconsideration must be filed within TWO (2) MONTHS of the date of this decision in order to be considered timely. See 37 CFR 1.181(f).

Further correspondence with respect to this matter should be addressed as follows and to the **attention of Senior Petitions Attorney Christina Tartera Donnell:**

By mail: Mail Stop Petition
Commissioner for Patents
P.O. Box 1450
Alexandria, VA 22313-1450

By FAX: (703) 872-9306
Attn: Office of Petitions

By hand: U.S. Patent and Trademark Office
220 20th Street S.
Customer Window, Mail Stop Petition
Crystal Plaza Two, Lobby, Room 1B03
Arlington, VA 22202

The Office of Initial Patent Examination is directed to correct the filing date of the above-identified application to July 5, 2003.

Telephone inquiries regarding this matter should be directed to the undersigned at (703) 306-5589.

Christina Tartera Donnell

Christina Tartera Donnell
Senior Petitions Attorney
Office of Petitions

UNITED STATES PATENT AND TRADEMARK OFFICE

Commissioner for Patents
United States Patent and Trademark Office
P.O. Box 1450
Alexandria, VA 22313-1450
www.uspto.gov

ROSS J. OEHLER
AVENTIS PHARMACEUTICALS INC.
ROUTE 202-206
MAIL CODE: D303A
BRIDGEWATER NJ 08807

COPY MAILED

AUG 1 8 2004

OFFICE OF PETITIONS

In re Application of	:	
Majid et al.	:	
Application No. 10/613,588	:	DECISION GRANTING
Filed: July 3, 2003	:	PETITION
Attorney Docket No. USAV2003/0110 US NP	:	

This is a decision on the renewed petition under 37 CFR 1.10, filed August 6, 2004, requesting that the above-identified application be accorded a filing date of July 3, 2003, rather than the presently accorded filing date of July 5, 2003.

Petitioner asserted that petitioner deposited the above-identified application with the USPS using "Express Mail Service" on July 3, 2003. In support of the allegation, the petition is accompanied by a United States Postal Service Track & Confirm receipt indicating that a package bearing Express Mail label No. EL816576588US was accepted by the USPS on July 3, 2003, at 15:00, in Edison NJ 08899. The same Express Mail label number was placed on the original application papers located in the official file.

Accordingly, the petition is **granted**.

The Office of Initial Patent Examination is directed to correct the filing date of the above-identified application to July 3, 2003, and to mail a corrected filing receipt.

Telephone inquiries regarding this matter should be directed to the undersigned at (703) 306-5589.

Christina Tartera Donnell

Christina Tartera Donnell
Senior Petitions Attorney
Office of Petitions

UNITED STATES PATENT AND TRADEMARK OFFICE

UNITED STATES DEPARTMENT OF COMMERCE
United States Patent and Trademark Office
Address: COMMISSIONER FOR PATENTS
P.O. Box 1450
Alexandria, Virginia 22313-1450
www.uspto.gov

NUTTER MCCLENNEN & FISH LLP
SEAPORT WEST
155 SEAPORT BOULEVARD
BOSTON, MA 02210-2604

Mail Date: 04/20/2010

Applicant	: Eric Feron	: DECISION ON REQUEST FOR
Patent Number	: 7568709	: RECALCULATION of PATENT
Issue Date	: 08/04/2009	: TERM ADJUSTMENT IN VIEW
Appliction No	: 10/613,613	: OF WYETH
Filed	: 07/03/2003	:
		:

The Patentee's Request for Recalculation is **DISMISSED.**

This Request is deemed ineligible for consideration for one or more of the following reasons:

(A). The patent for which PTA recalculation is requested is either a design or reissue application or is a reexamination proceeding;

(B). The patent for which PTA recalculation is requested resulted from a utility or plant application filed under 35 USC 111(a) before May 29, 2000 and no CPA filed in the application on/after May 29, 2000;

(C). The patent for which PTA recalculation is requested resulted from an international application in which the international filing date was before May 29, 2000 and no CPA filed in the application on/after May 29, 2000;

(D). The patent for which PTA recalculation is requested issued on/after March 2, 2010;

(E). The Request for Recalculation was filed more than 180 days after the grant date of the patent and the request was not filed within two months of a dismissal of a request for reconsideration of the of the patent term under 37 CFR 1.705(d);

(F). The Request for Recalculation is not solely limited to USPTO pre-Wyeth interpretation of 35 U.S.C. 154(b)(2)(A);

or

(G). A civil action was filed pursuant to 35 U.S.C. 154(b)(4)(A)concerning the same patent at issue in this request.

Patentee may file a reply to this decision dismissing the Request for Recalculation. Patentee must file such reply within one month or thirty days, whichever is longer, of the mail date of the decision dismissing the Request for Recalculation. No fee is required if patentee is asserting in the reply that the dismissal for ineligibility is improper.

Patentee should use document code PET.OP if electronically filing a reply to this dismissal. If the USPTO finds that the request was improperly deemed ineligible, the USPTO will mail applicant a recalculation determination.

Patentee should be aware that in order to preserve the right to review in the United States District Court for the District of Columbia of the USPTO patent term adjustment determination, patentee must ensure that he or she also take the steps required under 35 U.S.C. 154(b)(4)(A). Nothing in the request for recalculation should be construed as providing an alternative time frame for commencing a civil action under 35 U.S.C. 154 (b)(4)(A).

Any questions concerning this decision should be directed to the Office of Patent Legal Administration at 571-272-7702.

UNITED STATES PATENT AND TRADEMARK OFFICE

Commissioner for Patents
United States Patent and Trademark Office
P.O. Box 1450
Alexandria, VA 22313-1450
www.uspto.gov

STEVEN F. WEINSTOCK
ABBOTT LABORATORIES
100 ABBOTT PARK ROAD
DEPT. 377/AP6A
ABBOTT PARK IL 60064-6008

COPY MAILED

MAY 1 9 2004

OFFICE OF PETITIONS

In re Application of	:	
Qiu et al.	:	
Application No. 10/613,622	:	DECISION ON PETITION
Filed: April 5, 2004	:	
Attorney Docket No. 7089.US.01	:	

This is a decision on the petition filed April 5, 2004, requesting that the above-identified application be accorded a filing date of April 5, 2004, the date of receipt of omitted drawing. It does not appear from the petition that applicant is requesting an earlier filing date.

The above-identified application was deposited on July 2, 2003. However, on October 1, 2003, the Office of Initial Patent Examination mailed a Notice of Incomplete Nonprovisional Application, stating that the application was deposited without drawings and that the filing date would be the date of receipt of the drawings. Additionally, the Notice indicated that the oath/declaration was unsigned.

In response, on April 5, 2004, applicant filed the present petition, one sheet of drawings containing Figure 1, an authorization to charge the Deposit Account for the petition fee, and an executed declaration. Applicant has not submitted any arguments that the drawing sheet was filed with the application on July 2, 2003.

The Office file is the official record of the papers originally filed in this application. A review of the official file reveals no drawings are present in the file. An applicant alleging that a paper was filed in the Office and later misplaced has the burden of proving the allegation by a preponderance of the evidence.

The Office has a well established and well publicized practice of providing a receipt for papers filed in the Office to any applicant desiring a receipt. The practice requires that any paper for which a receipt is desired be filed in the Office with a self-addressed postcard identifying the paper. A postcard receipt which itemizes and properly identifies the papers that are being filed serves as prima facie evidence of receipt in the Office of all the items listed thereon on the date-stamped thereon by the Office. See MPEP 503.

No date-stamped postcard receipt has been submitted in this case. If applicant has a postcard receipt showing that one sheet of drawings was filed on July 2, 2003, the postcard receipt or a copy thereof should be supplied.

At the present time, the petition is **granted** to the extent that the application will be accorded a filing date of April 5, 2004, with Figure 1 submitted on that date. No petition fee is necessary. The $130.00 petition fee and the $1,480.00 extension of time fees are unnecessary and will be refunded to Deposit Account No. 01-0025.

The Office of Initial Patent Examination is directed to process the present application with a filing date of April 5, 2004, using Figure 1 filed on that date..

Any inquiries should be directed to the undersigned at (703) 306-5589.

Christina Tartera Donnell

Christina Tartera Donnell
Senior Petitions Attorney
Office of Petitions

UNITED STATES PATENT AND TRADEMARK OFFICE

OFFICE

COPY MAILED

DEC 0 9 2005

Director's Office
Office of Patent Publication

PARSONS HSUE & DE RUNTZ LLP
595 MARKET STREET
SUITE 1900
SAN FRANCISCO, CA 94105

In re Application of
CHEN, WAYNE, et al.
Application No. 10/613,634
Filed: July 3, 2003
Attorney Docket No. TNCR.178US1

DECISION ON PETITION

This is a decision on the Petition Re Wrongful Holding of Abandonment, received in the United States Patent & Trademark (USPTO) via facsimile transmission on December 2, 2005, which is being treated as a Petition To Withdraw Holding Of Abandonment Under 37 CFR 1.181. Petitioner request that the holding of abandonment be withdrawn and the application proceed to issue.

The petition is **DISMISSED**.

The above-identified application was held abandoned for Applicants failure to timely pay the issue fee as required in the Notice of Allowance mailed July 13, 2005. The Notice of Abandonment indicates that the submitted fee of $0 is insufficient. A balance of $1,700 is due. Issue fee of $1,400 and publication fee of $300.

The Office acknowledges receipt of PART B – FEE(S) TRANSMITTAL via facsimile transmission on October 25, 2005, authorizing that the Issue Fee, Publication Fee, and Advance Order Copies Fee be charged to Deposit Account No. 50-2664. Unfortunately, on October 12, 2005, when an attempt was made by the Office of Finance to charge such fees, there were insufficient funds in the Deposit Account.

37 CFR 1.25 (a) and (b), which states in part:

> 1.25(a) ...An amount sufficient to cover all fee, services, copies, etc., requested must always be on deposit. Charges to accounts with insufficient funds will not be accepted."
> 1.25 (b) ...An authorization to charge a fee to a deposit account will not be considered payment of the fee on the date the authorization to charge the fee is effective as to the particular fee to be charged unless sufficient funds are present in the account to cover the fee.

In light of the non-compliance with 37 CFR 1.25, the holding of abandonment cannot be withdrawn.

Applicant may seek relief by filing a petition for Revival of Abandoned Application under CFR § 1.137 (a) or (b). (Forms are available at USPTO website http://www.uspto.gov)

- Under 37 CFR 1.137(a), a petition for the revival of an ***unavoidably*** abandoned application
- Under 37 CFR 1.137(b), a petition for the revival of an ***unintentionally*** abandoned application

Further inquires with respect to filing a petition under 37 CFR 1.137 may be directed to the Office of Petitions at 571-272-3282 or addressed as follows:

By mail: Mail Stop Petitions
Commissioner for Patents
Office of Petitions
P O Box 1450
Alexandria, VA 22313-1450

Telephone inquires concerning this decision matter may be directed to the undersigned at 703 308-9250.

Thomas E. Hawkins

Thomas E. Hawkins
Paralegal Specialist
Office of the Director
Office of Patent Publication

UNITED STATES PATENT AND TRADEMARK OFFICE

Commissioner for Patents
United States Patent and Trademark Office
P.O. Box 1450
Alexandria, VA 22313-1450
www.uspto.gov

PARSONS HSUE & DE RUNTZ LLP
595 MARKET STREET
SUITE 1900
SAN FRANCISCO CA 94105

COPY MAILED

FEB 1 0 2006

OFFICE OF PETITIONS

In re Application of	:	
Chen et al.	:	
Application No. 10/613,634	:	ON PETITION
Filed: July 3, 2003	:	
Attorney Docket No. TNCR.178US1	:	

This is a decision on the petition under 37 C.F.R. § 1.137(b), filed January 30, 2006, to revive the above-identified application.

The petition is **GRANTED.**

The petition satisfies the conditions for revival pursuant to the provisions of 37 CFR 1.137(b) in that (1) the reply in the form of an Issue Fee Transmittal with payment of the issue and publication fees; (2) the petition fee; and (3) the required statement of unintentional delay have been received. Accordingly, the response has been accepted as having been unintentionally delayed.

This matter is being referred to the Publishing Division for processing into a patent.

Telephone inquiries regarding this decision should be directed to the undersigned at (571) 272-3282.

Liana Chase
Petitions Examiner
Office of Petitions

SPE RESPONSE FOR CERTIFICATE OF CORRECTION

Paper No.:20090805

DATE : August 11, 2009

TO SPE OF : ART UNIT 1616

SUBJECT : Request for Certificate of Correction on Patent No.: 7,214,364

A response is requested with respect to the accompanying request for a certificate of correction.

Please complete this form and return with file, within **7** days to:
Certificates of Correction Branch - PK 3-910
Palm location **7590** - Tel. No. 305-8201

With respect to the change(s) requested, correcting Office and/or Applicant's errors, should the patent read as shown in the certificate of correction? No new matter should be introduced, nor should the scope or meaning of the claims be changed.

Thank You For Your Assistance **Certificates of Correction Branch**

The request for issuing the above-identified correction(s) is hereby:
Note your decision on the appropriate box.

☐ **Approved** **All** changes apply.

☐ **Approved in Part** Specify below which changes **do not** apply.

☒ **Denied** State the reasons for denial below.

Comments:

The request is denied because the declarations from the added inventors lack a statement indicating that the addition is necessitated by amendment of the claims. See 37 C.F.R. 1.48(c)(2). To correct the inventorship of U.S. Patent No. 7,214,364 the petitioners need to submit the documents set forth in 37 C.F.R. 1.324 (b)(1)-(4) and pay the fee set forth in 37 C.F.R. 1.20(b), because the inventorship is being corrected on an issued patent.

/Johann Richter/
SPE 1616

UNITED STATES PATENT AND TRADEMARK OFFICE

Commissioner for Patents
United States Patent and Trademark Office
P.O. Box 1450
Alexandria, VA 22313-1450

Serial no. :10/613639
Date Mailed : August 14, 2009
Patent No. : 7,214,364 B2
Patent Issued : Maya 8, 2007
Inventor(s) : Alan Bruce Montgomery
Title :INHALABLE AZTREONAM LYSINATE FORMULATION FOR TREATMENT AND PREVENTION OF PULMONARY BACTERIAL INFECTIONS

Re: Request for Certificate of Correction

Consideration has been given your request for the issuance of a certificate of correction for the above-identified patent.

Respecting the alleged errors noted in your request your request is being denied because the declarations from the added inventors lack a statement of the claims. See 37C.F.R. 1.48 (c)(2). To correct the inventorship of U.S. Patent no. 7,214,364 the petitioners need to submit the documents set forth in 37 C.F.R> 1.324 (b)(1)-(4) and pay the fee set forth in 37 C.F.R.1.20(b), because the inventorship is being corrected on an issued patent.

In view of the foregoing your request is hereby denied.

Magdalene Talley
For Mary Diggs, Supervisor
Decisions and Certificate
Of Correction Branch
(703)756-1540
Fax (571)270-9942

Hans Verny
425 Sherman Avenue, Ste. 230
Palo Alto, CA 94306

MD/mt

SPE RESPONSE FOR CERTIFICATE OF CORRECTION

Paper No.:20100326

DATE : March 27, 2010

TO SPE OF : ART UNIT 1616

SUBJECT : Request for Certificate of Correction on Patent No.: 7214364

A response is requested with respect to the accompanying request for a certificate of correction.

Please complete this form and return with file, within **7** days to:
Certificates of Correction Branch - ST (South Tower) 9A22
Palm location **7590** - Tel. No. (703) 305-8309

With respect to the change(s) requested, correcting Office and/or Applicant's errors, should the patent read as shown in the certificate of correction? No new matter should be introduced, nor should the scope or meaning of the claims be changed.

Thank You For Your Assistance **Certificates of Correction Branch**

The request for issuing the above-identified correction(s) is hereby:

Note your decision on the appropriated box.

☒ **Approved** All changes apply.

☐ **Approved in Part** Specify below which changes **do not** apply.

☐ **Denied** State the reasons for denial below.

Comments:

/JOHANN R RICHTER/
Supervisory Patent Examiner.Art Unit 1616

UNITED STATES PATENT AND TRADEMARK OFFICE

Commissioner for Patents
United States Patent and Trademark Office
P.O. Box 1450
Alexandria, VA 22313-1450
www.uspto.gov

RAJU LAW FIRM, LLC
P.O. BOX 12372
ATLANTA GA 30355

COPY MAILED

OCT 0 2 2006

OFFICE OF PETITIONS

In re Application of :
Barnes et al. :
Application No. 10/613,644 :
Filed: July 3, 2003 :
Attorney Docket No. 0015-0001 :

ON PETITION

This is a decision on the petition under 37 CFR 1.181 to withdraw the holding of abandonment, filed June 15, 2006.

The petition to withdraw the holding of abandonment is **Granted**.

This above-identified application became abandoned for failure to file a response to a Notice to File Corrected Application Papers mailed on October 2, 2003. The Notice to File Corrected Application Papers set an extendable two (2) month period for reply. No timely request for extension of time was obtained under the provisions of 37 CFR §1.136(a). A reply was received on November 13, 2003. A Notice of Incomplete Reply was mailed December 12, 2003, the period of reply continued to run from the original Notice. Accordingly, this application became abandoned on December 3, 2003. A Notice of Abandonment was mailed on April 19, 2006.

Petitioner contends that a response to the Notice to File Corrected Application Papers was received on November 13, 2003. The Notice required a substitute specification and additional claim fees in the amount of $126. Petitioner states upon receipt of the Notice of Incomplete Reply he was perplexed as to why the new Notice stated an additional $43 was required. Petitioner contends he spoke to Eleanor Kurtz who looked into the matter and determined the second notice was incorrect and miscalculated. Petitioner insist that he was informed that $43 was not required but $3 was owed due to a fee increase one dollar per claim. Petitioner states on December 15, 2003 he faxed over a credit card authorization for $3.00. Petitioner has provided a copy of the

correspondence faxed.

A review of the records shows that petitioner responded to the Notice of Incomplete reply with the submission of the $3 authorization. Further review of the record shows that petitioner submitted three Independent claims over 3. Effective October 1, 2003 the independent claims over three for a small entity required $43.00 per claim. Accordingly, the October 2, 2003 Notice should have required petitioner to submit $129.00 for the three excess claims.

In view of the evidence presented, the holding of abandonment is vacated.

This application is being forwarded to the Office of Initial Patent Examination for further processing

Telephone inquiries concerning this matter should be directed to the undersigned at (571) 272-3215.

Charlema R. Grant

Charlema R. Grant
Petitions Attorney
Office of Petitions

UNITED STATES PATENT AND TRADEMARK OFFICE

Commissioner for Patents
United States Patent and Trademark Office
P.O. Box 1450
Alexandria, VA 22313-1450
www.uspto.gov

ROBERTS ABOKHAIR & MARDULA
SUITE 1000
11800 SUNRISE VALLEY DRIVE
RESTON, VA 20191

COPY MAILED
JUL 2 0 2004
OFFICE OF PETITIONS

In re Application of
Zalenski, Papp, Cooney, Milota, and Mostowfi
Application No.: 10/613,656
Filed: July 3, 2003
Attorney Docket No: 2870-001CIP
For: SYSTEM AND METHOD FOR USING MULTIPLE COMMUNICATION PROTOCOLS IN MEMORY LIMITED PROCESSORS

: DECISION ACCORDING
: RULE 47(a) STATUS

This is in response to the petition under 37 CFR 1.47(a), filed June 4, 2004.

The petition is **GRANTED**.

The above-identified application and papers have been reviewed and found in compliance with 37 CFR 1.47(a). This application is hereby accorded Rule 1.47(a) status.

The above-cited application was filed on July 3, 2003, and was not accompanied by a proper oath or declaration. A Notice to File Missing Parts of Nonprovisional Application was mailed on November 5, 2003, requiring an properly executed declaration and $65.00 surcharge. The notice allowed an extendable period for reply of two months from its mailing date. On January 6, 2004, the instant petition was filed along with a request for an extension of time within the fifth month and an oath or declaration.

Petitioner has shown that inventors Mostowfi, Milota, and Papp have refused to join the filing of the above-identified application after having been presented with the application papers. The above-identified application and papers have been reviewed and found in compliance with 37 CFR 1.47(a). This application is hereby accorded Rule 1.47(a) status.

As provided in Rule 1.47(c), this Office will forward notice of this application's filing to the non-signing inventor at the addresses given in the petition. Notice of the filing of this application will also be published in the Official Gazette.

This application will be forwarded to the Office of Initial Patent Examination for further processing.

Telephone inquiries should be directed to the undersigned at (703) 305-0010.

Kenya A. McLaughlin
Petitions Attorney
Office of Petitions

UNITED STATES PATENT AND TRADEMARK OFFICE

Commissioner for Patents
United States Patent and Trademark Office
P.O. Box 1450
Alexandria, VA 22313-1450
www.uspto.gov

Darius Mostowfi
248 Beverly Drive
San Carlos, CA 94072

COPY MAILED
JUL 2 0 2004
OFFICE OF PETITIONS

In re Application of
Zalenski, Papp, Cooney, Milota, and Mostowfi :
Application No. 10/613,656 :
Filed: July 3, 2003 : LETTER
Attorney Docket Number: 2870-001CIP :
For: SYSTEM AND METHOD FOR USING MULTIPLE COMMUNICATION PROTOCOLS IN MEMORY LIMITED PROCESSORS

Dear Mr. Mostowfi:

You are named as a joint inventor in the above-identified United States reissue patent application filed under the provisions of 35 U.S.C. 116 (United States Code) and 37 CFR 1.47(a), Rules of Practice in Patent Cases. Should a patent be granted on the application you will be designated therein as a joint inventor.

As a joint inventor, you are entitled to inspect any paper in the file wrapper of the application, order copies of all or any part thereof (at a prepaid cost per 37 CFR 1.19) or make your position of record in the application. Alternatively, you may arrange to do any of the preceding through a registered patent attorney or agent presenting written authorization from you. If you care to join the application, counsel of record (see below) would presumably assist you. Joining in the application would entail the filing of an appropriate oath or declaration by you pursuant to 37 CFR 1.63. It should be further noted that any assignee of record of the entire interest in the application may request that the inventor(s) be excluded from access to the application. If the request is granted, you will be informed of that fact and will only be permitted to inspect the application on sufficient showing of why such inspection is necessary to conserve your rights. See *MPEP* 106, citing, *In re The Kellog Switchboard & Supply Company*, 1906 C.D. 274 (Comm'r Pat. 1906).

Telephone inquiries regarding this communication should be directed to Petitions Attorney Kenya A. McLaughlin at (703) 305-0010. Requests for information regarding your application should be directed to the File Information Unit at (703) 308-2733. Information regarding how to pay for and order a copy of the application, or a specific paper in the application, should be directed to Certification Division at (703) 308-9726 or 1-800-972-6382 (outside the Washington D.C. area).

Kenya A. McLaughlin

Kenya A. McLaughlin
Petitions Attorney
Office of Petitions

ROBERTS ABOKHAIR & MARDULA
SUITE 1000
11800 SUNRISE VALLEY DRIVE
RESTON, VA 20191

UNITED STATES PATENT AND TRADEMARK OFFICE

Commissioner for Patents
United States Patent and Trademark Office
P.O. Box 1450
Alexandria, VA 22313-1450
www.uspto.gov

Andre Milota
421 E. 18th Street, Apt. 410
Oakland, CA 94606

COPY MAILED
JUL 20 2004
OFFICE OF PETITIONS

In re Application of
Zalenski, Papp, Cooney, Milota, and Mostowfi :
Application No. 10/613,656 :
Filed: July 3, 2003 : LETTER
Attorney Docket Number: 2870-001CIP :
For: SYSTEM AND METHOD FOR USING MULTIPLE COMMUNICATION PROTOCOLS IN MEMORY LIMITED PROCESSORS

Dear Mr. Milota:

You are named as a joint inventor in the above-identified United States reissue patent application filed under the provisions of 35 U.S.C. 116 (United States Code) and 37 CFR 1.47(a), Rules of Practice in Patent Cases. Should a patent be granted on the application you will be designated therein as a joint inventor.

As a joint inventor, you are entitled to inspect any paper in the file wrapper of the application, order copies of all or any part thereof (at a prepaid cost per 37 CFR 1.19) or make your position of record in the application. Alternatively, you may arrange to do any of the preceding through a registered patent attorney or agent presenting written authorization from you. If you care to join the application, counsel of record (see below) would presumably assist you. Joining in the application would entail the filing of an appropriate oath or declaration by you pursuant to 37 CFR 1.63. It should be further noted that any assignee of record of the entire interest in the application may request that the inventor(s) be excluded from access to the application. If the request is granted, you will be informed of that fact and will only be permitted to inspect the application on sufficient showing of why such inspection is necessary to conserve your rights. See *MPEP* 106, citing, *In re The Kellog Switchboard & Supply Company*, 1906 C.D. 274 (Comm'r Pat. 1906).

Telephone inquiries regarding this communication should be directed to Petitions Attorney Kenya A. McLaughlin at (703) 305-0010. Requests for information regarding your application should be directed to the File Information Unit at (703) 308-2733. Information regarding how to pay for and order a copy of the application, or a specific paper in the application, should be directed to Certification Division at (703) 308-9726 or 1-800-972-6382 (outside the Washington D.C. area).

Kenya A. McLaughlin

Kenya A. McLaughlin
Petitions Attorney
Office of Petitions

ROBERTS ABOKHAIR & MARDULA
SUITE 1000
11800 SUNRISE VALLEY DRIVE
RESTON, VA 20191

UNITED STATES PATENT AND TRADEMARK OFFICE

Commissioner for Patents
United States Patent and Trademark Office
P.O. Box 1450
Alexandria, VA 22313-1450
www.uspto.gov

Albert Papp
996 West Dana Street
Mountain View, CA 94041

In re Application of
Zalenski, Papp, Cooney, Milota, and Mostowfi
Application No. 10/613,656
Filed: July 3, 2003
Attorney Docket Number: 2870-001CIP
For: SYSTEM AND METHOD FOR USING MULTIPLE COMMUNICATION PROTOCOLS IN MEMORY LIMITED PROCESSORS

LETTER

COPY MAILED
JUL 2 0 2004
OFFICE OF PETITIONS

Dear Mr. Milota:

You are named as a joint inventor in the above-identified United States reissue patent application filed under the provisions of 35 U.S.C. 116 (United States Code) and 37 CFR 1.47(a), Rules of Practice in Patent Cases. Should a patent be granted on the application you will be designated therein as a joint inventor.

As a joint inventor, you are entitled to inspect any paper in the file wrapper of the application, order copies of all or any part thereof (at a prepaid cost per 37 CFR 1.19) or make your position of record in the application. Alternatively, you may arrange to do any of the preceding through a registered patent attorney or agent presenting written authorization from you. If you care to join the application, counsel of record (see below) would presumably assist you. Joining in the application would entail the filing of an appropriate oath or declaration by you pursuant to 37 CFR 1.63. It should be further noted that any assignee of record of the entire interest in the application may request that the inventor(s) be excluded from access to the application. If the request is granted, you will be informed of that fact and will only be permitted to inspect the application on sufficient showing of why such inspection is necessary to conserve your rights. See *MPEP* 106, citing, *In re The Kellog Switchboard & Supply Company*, 1906 C.D. 274 (Comm'r Pat. 1906).

Telephone inquiries regarding this communication should be directed to Petitions Attorney Kenya A. McLaughlin at (703) 305-0010. Requests for information regarding your application should be directed to the File Information Unit at (703) 308-2733. Information regarding how to pay for and order a copy of the application, or a specific paper in the application, should be directed to Certification Division at (703) 308-9726 or 1-800-972-6382 (outside the Washington D.C. area).

Kenya A. McLaughlin

Kenya A. McLaughlin
Petitions Attorney
Office of Petitions

ROBERTS ABOKHAIR & MARDULA
SUITE 1000
11800 SUNRISE VALLEY DRIVE
RESTON, VA 20191

UNITED STATES PATENT AND TRADEMARK OFFICE

Commissioner for Patents
United States Patent and Trademark Office
P.O. Box 1450
Alexandria, VA 22313-1450
www.uspto.gov

ROBERTS ABOKHAIR & MARDULA
SUITE 1000
11800 SUNRISE VALLEY DRIVE
RESTON VA 20191

COPY MAILED

JUN 27 2005

OFFICE OF PETITIONS

In re Application of
Zalenski, Papp, Cooney, Milota, Mostowfi
Application No. 10/613,656
Filed: July 3, 2003,
Attorney Docket No. 2870-001CIP

: DECISION
: DISMISSING PETITION

This application has been referred to this office in light of the communication filed November 12, 2004, by an attorney not of record on behalf of a non-signing inventor, which is being treated as a petition seeking acceptance of a power of attorney by less than all the joint inventors.

The petition is dismissed.

The above-identified application was accorded Rule 47 status in the absence of the making of this application by joint inventor Mostowfi. In such situations, any subsequent communications filed by the non signing inventor are merely placed in the file. See MPEP 409.03(j). Furthermore, a non-signing inventor is not entitled to a hearing (Cogar v. Schuyler, 464 F.2d 747, 173 USPQ 389 (D.C. Cir. 1972)), and is not entitled to prosecute the application if status under 37 CFR 1.47 has been accorded

Here, however, on November 12, 2004, the non-signing inventor filed a communication containing a combined declaration and power of attorney allegedly "appointing" Naren Chaganti No. 44,602 as his registered representative. Chaganti, in turn, asserts that the parties are in litigation, that Mostowfi is the sole inventor, and seeks to change the correspondence address. Chaganti's request for a change of correspondence address is summarily **denied. A registered practitioner who is not of record may not change the correspondence address herein. See MPEP 403.**

However, petitioner appears to be unaware of the significance of the fact that this application has been accorded Rule 47 status due to Mostowfi's refusal to join with the other named inventors in signing the declaration filed under 37 CFR 1.63. Since petitioner has refused to join with the other named inventors in signing the declaration herein, the procedure set forth in MPEP 402.10 requiring a petition under 37 CFR 1.182 seeking appointment of diverse counsel does not apply to this case. Rather, that procedure is only available to those inventors who have already jointly signed the oath or declaration and then seek diverse representation.

The declaration under 37 CFR 1.63 signed by Mostowfi that was proffered with the instant petition asserts only his sole inventorship and manifestly does not recognize the other named inventors as

being joint inventors in the above-identified application. As such, Mostowfi cannot properly said to have "joined" in this application at this time within the meaning of MPEP 409.03(i). As further noted in that MPEP section, a non signing inventor is not entitled to prosecute the application in which he refuses to join.

Should non-signing inventor Mostowfi subsequently join in this application by executing an appropriate oath or declaration acknowledge the other joint inventors, any future request for a separate power of attorney for Chaganti will require the agreement of the other signatory inventors. See MPEP 409.03(i), which further notes:

> If a nonsigning inventor feels that he or she is the sole inventor of an invention claimed in a 37 CFR 1.47 application naming him or her as a joint inventor, the nonsigning inventor may file his or her own application and request that his or her application be placed in interference with the 37 CFR 1.47 application. If the claims in both the nonsigning inventor's application and the 37 CFR 1.47 application are otherwise found allowable, an interference may be declared.

A courtesy copy of this decision is being mailed to counsel Chaganti who filed the petition of behalf of Mostowfi on a one time basis only. The USPTO will not undertake dual correspondence. See 37 CFR 1.33(a).

Petitioner's "representative" is placed on notice that the Office considers the filing of a petition or other paper on behalf of a party, as here, having no standing in an application, and not otherwise authorized by the rules of practice, to be a petition or paper presented for an improper purpose (37 CFR 10.18). For example, the filing of a paper on behalf of a party in situations not authorized by the rules of practice delays the examination and processing of applications, which may cause harm to the general public if it results in the Office missing any one of the examination time frames specified in 35 U.S.C. §§ 154(b)(1)(A) or 154(b)(1)(B). Therefore, the Office may refer any further third party petitions in this or any other application to the Office of Enrollment and Discipline for appropriate action.

Telephone inquiries related to this decision, from persons other than Chaganti or Mostowfi, should be directed to the undersigned at (571) 272-3217.

Brian Hearn

Brian Hearn
Senior Petitions Examiner
Office of Petitions
Office of the Deputy Commissioner
for Patent Examination Policy

cc:
Naren Chaganti
432 S. Curson Ave Ste 12H
Los Angeles CA 90036

UNITED STATES PATENT AND TRADEMARK OFFICE

Commissioner for Patents
United States Patent and Trademark Office
P.O. Box 1450
Alexandria, VA 22313-1450
www.uspto.gov

Jon L. Roberts, Esq.
Roberts Abokhair & Mardula, LLC
11800 Sunrise Valley Drive, Suite 1000
Reston, VA 20191-5302

COPY MAILED

JUL 24 2006

OFFICE OF PETITIONS

In re Application of	:	
Anthony Zalenski	:	
Application No. 10/613,656	:	DECISION ON PETITION
Filed: July 3, 2003	:	TO WITHDRAW
Attorney Docket No. 2870-001CIP	:	FROM RECORD
	:	

This is a decision on the Request to Withdraw as attorney or agent of record under 37 C.F.R. § 1.36(b), filed December 16, 2003.

The request is **APPROVED**.

A grantable request to withdraw as attorney/agent of record must be signed by every attorney/agent seeking to withdraw or contain a clear indication that one attorney is signing on behalf of another/others. A request to withdraw will not be approved unless at least 30 (thirty) days would remain between the date of approval and the later of the expiration date of a time to file a response or the expiration date of the maximum time period which can be extended under 37 C.F.R. § 1.136(a).

The request was signed by Jon L. Roberts on behalf of all attorneys of record.

All attorneys/agents have been withdrawn.

Applicant is reminded that there is no attorney of record at this time.]

All future correspondence will be directed to the first named inventor Anthony Zalenski at the address indicated below.

The request to change the correspondence of record is not acceptable as the requested correspondence address is not that of: (1) the first named signing inventor; or (2) an intervening assignee of the entire interest under 37 C.F.R 3.71. All future communications from the Office will be directed to the first named signing inventor or the assignee of the entire interest at the first copied address below until otherwise properly notified by the applicant.

There is no outstanding Office action at this time.

Telephone inquiries concerning this decision should be directed to Terri Williams at 571-272-2991.

David Bucci
Petitions Examiner
Office of Petitions

cc: Anthony Zalenski
4060 NW 24th Terrace
Boca Raton, FL 33431

cc: Paul Arena
I2 Telecom International, Inc.
1200 Abemathy Road, Suite 1800
Atlanta, GA 30328

UNITED STATES PATENT AND TRADEMARK OFFICE

UNITED STATES DEPARTMENT OF COMMERCE
United States Patent and Trademark Office
Address: COMMISSIONER FOR PATENTS
P.O. Box 1450
Alexandria, Virginia 22313-1450
www.uspto.gov

APPLICATION NUMBER	FILING OR 371 (c) DATE	FIRST NAMED APPLICANT	ATTY. DOCKET NO./TITLE
10/613,656	07/03/2003	Anthony Zalenski	2870-001CIP

CONFIRMATION NO. 2953

OC000000019715654

OC000000019715654

22208
ROBERTS ABOKHAIR & MARDULA
SUITE 1000
11800 SUNRISE VALLEY DRIVE
RESTON, VA 20191

Date Mailed: 07/21/2006

NOTICE REGARDING CHANGE OF POWER OF ATTORNEY

This is in response to the Power of Attorney filed 12/16/2005.

- The withdrawal as attorney in this application has been accepted. Future correspondence will be mailed to the new address of record. 37 CFR 1.33.

Terri S Williams

TERRI S WILLIAMS
OP (571) 272-2991

FORMER ATTORNEY/AGENT COPY

UNITED STATES PATENT AND TRADEMARK OFFICE

Commissioner for Patents
United States Patent and Trademark Office
P.O. Box 1450
Alexandria, VA 22313-1450
www.uspto.gov

KING & SPALDING
191 PEACHTREE STREET, N.W.
ATLANTA, GA 30303-1763

COPY MAILED

FEB 14 2005

OFFICE OF PETITIONS

In re Patent No. 6,833,961 :
Issue Date: December 21, 2004 :
Application No. 10/613,674 : ON PETITION
Filed: July 3, 2003 :
Attorney Docket No. 08690.105004 CON2 :

This is a decision on the petition filed January 31, 2005, which is being treated as a petition under 37 CFR 3.81(b)[1] to accept the addition of the second assignee on the front page of the above-identified patent.

The petition is GRANTED.

This matter is being referred to the Certificates of Correction Branch for issuance of a Certificate of Correction to:

(1) **Add the assignee:**
Chardon Tool & Supply Co., Inc.
Chardon, OH (US)

(2) **Correct the other item listed in the draft Certificate of Correction**

Telephone inquiries concerning this matter may be directed to Wan Laymon at (571) 272-3220. Any questions concerning the issuance of the Certificate of Correction should be directed to the Certificates of Correction Branch at (703) 305-8309.

Wan Laymon
Petitions Examiner
Office of Petitions
Office of the Deputy Commissioner
for Patent Examination Policy

[1] *See* Official Gazette of June 22, 2004

UNITED STATES PATENT AND TRADEMARK OFFICE

Commissioner for Patents
United States Patent and Trademark Office
P.O. Box 1450
Alexandria, VA 22313-1450
www.uspto.gov

MAY - 9 2005

WILLIAM J. MCNICHOL, JR., ESQUIRE
REED SMITH LLP
2500 ONE LIBERTY PLACE
1650 MARKET STREET
PHILADELPHIA PA 19103-7301

In re Application of	:
Patel et al.	:
Serial No.: 10/613,698	: PETITION TO MAKE SPECIAL
Filed: July 3, 2003	:
Attorney Docket No.: 03-40102-US	:

This is in response to applicants' petition filed April 19, 2005, to make the above-identified application special under the provisions of 37 CFR 1.102(c), based on the age of the applicant. No fee is required for this petition.

Applicants have satisfied the provisions set forth in M.P.E.P. 708.02, IV. Therefore, the petition is **GRANTED**.

The application will be forwarded to the examiner for action on the merits commensurate with this decision.

Should there be any questions with regard to this letter please contact Marianne C. Seidel by letter addressed to the Director, Technology Center 1600, PO BOX 1450, ALEXANDRIA, VA 22313-1450, or by telephone at 571-272-0584 or by facsimile transmission to the general Office facsimile number.

Marianne C. Seidel
Special Program Examiner
Technology Center 1600

UNITED STATES PATENT AND TRADEMARK OFFICE

UNITED STATES DEPARTMENT OF COMMERCE
United States Patent and Trademark Office
Address: COMMISSIONER FOR PATENTS
P.O. Box 1450
Alexandria, Virginia 22313-1450
www.uspto.gov

WALL & TONG, LLP/
ALCATEL-LUCENT USA INC.
595 SHREWSBURY AVENUE
SHREWSBURY, NJ 07702

Mail Date: 04/21/2010

Applicant	: Girish P. Chandranmenon	: DECISION ON REQUEST FOR
Patent Number	: 7599323	: RECALCULATION of PATENT
Issue Date	: 10/06/2009	: TERM ADJUSTMENT IN VIEW
Appliction No	: 10/613,702	: OF WYETH AND NOTICE OF INTENT TO
Filed	: 07/02/2003	: ISSUE CERTIFICATE OF CORRECTION
		:

The Request for Recalculation is **GRANTED** to the extent indicated.

The patent term adjustment has been determined to be **1222** days. The USPTO will *sua sponte* issue a certificate of correction reflecting the amount of PTA days determined by the recalculation.

Prior to the issuance of the certificate of correction, the USPTO will afford patentee an opportunity to be heard and request reconsideration. Accordingly, patentee has **one month or thirty (30) days**, whichever is longer, to file a request for reconsideration of this patent term adjustment calculation. See 35 U.S.C. 154(b)(3)(B)(ii) and 37 CFR 1.322(a)(4). No extensions of time will be granted under 37 CFR 1.136.

Patentee should use document code PET.OP if electronically filing a request for reconsideration of this patent term adjustment calculation. The patentee must also include the information required by 37 CFR 1.705(b)(2) and the fee required by 37 CFR 1.18(e). If patentee does not file a timely request for reconsideration of this patent term adjustment calculation including the information required by 37 CFR 1.705(b)(2) and the fee required by 37 CFR 1.18(e), the USPTO will issue a certificate of correction reflecting the PTA determination noted above.

Patentee should be aware that in order to preserve the right to review in the United States District Court for the District of Columbia of the USPTO patent term adjustment determination, patentee must ensure that he or she also take the steps required under 35 U.S.C. 154(b)(4)(A) in a timely manner. Nothing in the request for recalculation should be construed as providing an alternative time frame for commencing a civil action under 35 U.S.C. 154(b)(4)(A).

Any questions concerning this decision should be directed to the Office of Patent Legal Administration at 571-272-7702.

UNITED STATES PATENT AND TRADEMARK OFFICE

Commissioner for Patents
United States Patent and Trademark Office
P.O. Box 1450
Alexandria, VA 22313-1450
www.uspto.gov

GREENBERG TRAURIG, LLP
MET LIFE BUILDING
200 PARK AVENUE
NEW YORK NY 10166

COPY MAILED

JUN 0 8 2007

OFFICE OF PETITIONS

In re Application of Tobin Application No. 10/613,707 Filed: July 3, 2003 Attorney Docket: 63365.010100 Title of Invention: Configurable Toy and Item of Wearing Appeal	: : : : : : :	ON PETITION

This is a decision on the petition under 37 CFR 1.137(b) to revive the application filed on December 1, 2004. This petition is properly treated as a petition to withdraw the holding of abandonment under 37 CFR 1.181 .

The petition to withdraw the holding of abandonment is **GRANTED**.

The petition under 37 CFR 1.137(b) is **Dismissed as Moot**.

This above-identified application became abandoned for failure to timely file a response to a non-final Office Action which was mailed on March 22, 2004. The non-final Office Action set a three (3) month shortened statutory period for reply. No extensions of time were obtained under the provisions of 37 CFR §1.136(a). Accordingly, this application became abandoned on June 23, 2004. A Notice of Abandonment was mailed on October 4, 2004.

Petitioner asserts that the non-final Office action on March 22, 2004 was never received. Petitioner states a search of the file jacket and docket records confirms the non-final Office action was not received. In support of petitioner's contention, a copy of the docket records has been provided. The record shows that the mailing was returned to the Office for an unknown reasons.

The Notice of Abandonment is hereby vacated and the holding of abandonment is withdrawn.

The petition fee in the amount of $685.00 will be refunded to deposit account 50-1561.

This application is being forwarded to Art Unit 3712 for re-mailing of the non-final Office Action to the correspondence address of record. The extendable three month time period for reply will be set to run from the mailing date of the new Office Communication.

Telephone inquiries concerning this matter should be directed to the undersigned at (571) 272-3215.

Charlema R. Grant

Charlema R. Grant
Petitions Attorney
Office of Petitions

UNITED STATES PATENT AND TRADEMARK OFFICE

COMMISSIONER FOR PATENTS
UNITED STATES PATENT AND TRADEMARK OFFICE
P.O. BOX 1450
ALEXANDRIA, VA 22313-1450
www.uspto.gov

COPY MAILED

JAN 0 2 2004

OFFICE OF PETITIONS

3M INNOVATIVE PROPERTIES COMPANY
PO BOX 33427
ST. PAUL MN 55133-3427

In re Application of
Karim et al.
Application No. 10/613,722
Filed: July 3, 2003
Attorney Docket No. 55093US009

DECISION ON PETITION

This is a decision on the petition filed December 4, 2003 (certificate of mailing December 1, 2003), requesting that the above-identified application be accorded a filing date of July 3, 2003.

On July 3, 2003, applicants deposited the above-identified application. However, on October 1, 2003, the Office of Initial Patent Examination mailed a "Notice Of Incomplete Application" requiring drawings of applicants' invention and stating that the filing date would be the date of receipt of the omitted drawings. It is noted that the specification filed on July 3, 2003, describes drawings containing Figures 1-2, but no drawings were filed on July 3, 2003.

On December 4, 2003 (certificate of mailing December 1, 2003), applicants submitted the present petition and a $130.00 petition fee. Applicants admitted that the application was deposited without drawings on July 3, 2003. Applicants asserted that the drawings were not necessary for the understanding of the subject matter sought to be patented. Applicants stated that the missing drawings presented graphs of data relating to 3 comparative examples, and therefore, did not involve the embodiment of the invention. Applicants did not submit any drawings with the present petition.

As stated in MPEP § 601.01(f), it is the practice of the United States Patent and Trademark Office (Office) to treat an application that contains at least one process or method claim as an application for which a drawing is <u>not</u> necessary for an understanding of the invention under 35 U.S.C. 113 (first sentence).

MPEP § 601.01(f) also states that:

> A nonprovisional application having at least one claim, or a provisional application having at least some disclosure, directed to the subject matter discussed above for which a drawing is usually not considered essential for a filing date, describing drawing figure(s) in the specification, but filed without drawings will be treated as an application

filed without all of the drawing figures referred to in the specification as discussed in MPEP § 601.01(g), so long as the application contains something that can be construed as a written description and the names of all the inventors.

This application contains method claims. Therefore, the application should have been treated as an application filed without all of the drawing figures referred to in the specification as discussed in MPEP § 601.01(g).

MPEP § 601.01(g) states that if an application is filed without all of the drawing figure(s) referred to in the specification, a "Notice of Omitted Item(s)" is mailed indicating that the application has been accorded a filing date, but is lacking some of the figures of drawings described in the specification.

In view of the above, the requirement for drawings as set forth in the "Notice of Incomplete Application" of October 1, 2003, was mailed in error and is hereby withdrawn.

The petition is **granted**. The application will be accorded a filing date of July 3, 2003, without any drawings, as requested in the petition.

The $130.00 petition fee is unnecessary and will be credited to Deposit Account No. 13-3723, as authorized.

The Office of Initial Patent Examination is directed to accord the above-identified application a filing date of July 3, 2003, without any drawings, and to mail a corrected filing receipt.

Any inquiries related to this decision should be directed to the undersigned at (703) 306-5589.

Christina Tartera Donnell

Christina Tartera Donnell
Senior Petitions Attorney
Office of Petitions

UNITED STATES PATENT & TRADEMARK OFFICE
Washington, D.C. 20231

REQUEST FOR **PATENT** FEE REFUND

1 Date of Request: 12|30|03

2 Serial/Patent # 10|613,722

	3 Please refund the following fee(s):	4 PAPER NUMBER	5 DATE FILED	6 AMOUNT
	Filing			$
	Amendment			$
	Extension of Time			$
	Notice of Appeal/Appeal			$
X	Petition	—	12/4/03	$ 130
	Issue			$
	Cert of Correction/Terminal Disc.			$
	Maintenance			$
	Assignment			$
	Other			$

7 TOTAL AMOUNT OF REFUND $ 130

8 TO BE REFUNDED BY:

	Treasury Check
X	Credit Deposit A/C #:

9 1 3 -- 3 7 2 3

10 REASON:

	Overpayment
	Duplicate Payment
X	No Fee Due (Explanation):

Notice of Incomplete is withdrawn

11 REFUND REQUESTED BY: C.T. Donnell

TYPED/PRINTED NAME: C. T. Donnell TITLE: Pet. Atty

SIGNATURE: C. T. Donnell PHONE: 306-5589

OFFICE: 4700

****

THIS SPACE RESERVED FOR FINANCE USE ONLY:

APPROVED: [illegible] DATE: 1/2/04

Instructions for completion of this form appear on the back. After completion, attach white and yellow copies to the official file and mail or hand-carry to:

Office of Finance
Refund Branch
Crystal Park One, Room 802B

FORM PTO 1577
(01/90)

32692
PATENT TRADEMARK OFFICE

OIPE
DEC 04 2003
PATENT & TRADEMARK OFFICE

Patent
Case No.: 55093US009

IN THE UNITED STATES PATENT AND TRADEMARK OFFICE

First Named Inventor:	KARIM, NAIMUL		
Application No.:	10/613722	Group Art Unit:	Unknown
Filed:	July 3, 2003	Examiner:	
Title:	DENTAL MATERIALS WITH EXTENDABLE WORK TIME, KITS, AND METHODS		

RESPONSE TO NOTICE OF INCOMPLETE NONPROVISIONAL APPLICATION AND PETITION TO ACCORD FILING DATE

Mail Stop: Office of Petitions
Commissioner for Patents
Washington, DC 20231

CERTIFICATE OF MAILING
I hereby certify that this correspondence is being deposited with the United States Postal Service as First Class Mail in an envelope addressed to: Commissioner for Patents, Washington, DC 20231 on:
01 December 2003 — Renee A Wolff
Date — Signed by: Renee A. Wolff

Dear Sir:

This is in response to the NOTICE OF INCOMPLETE NONPROVISIONAL APPLICATION mailed on October 1, 2003 (copy enclosed). The application was deposited without drawings on July 3, 2003. The drawings are not necessary for the understanding of the subject matter sought to be patented, therefore no drawings are being submitted at this time. The missing drawings present graphs of data relating to 3 comparative examples, and thus do not involve embodiments of the present invention. Please accord a filing date of July 3, 2003. A Preliminary Amendment deleting from the specification any reference to the omitted drawing is also being submitted.

Please charge the petition fee of $130.00 set forth in 37 CFR 1.17(h) to our Deposit Account No. 13-3723. Please charge any additional fees or reimburse any excessive fees to that Deposit Account. A duplicate copy of this document is submitted for charging purposes.

12/05/2003 SSITHIB1 00000114 133723 10613722
01 FC:1460 130.00 DA

Respectfully submitted,

December 1, 2003
Date

By: Sean Edman
Sean J. Edman, Reg. No.: 42,506
Telephone No.: (651) 575-1369

Office of Intellectual Property Counsel
3M Innovative Properties Company
Facsimile No.: 651-736-3833

12/05/2003 SSITHIB1 00000114 133723 10613722
01 FC:1460 130.00 DA

UNITED STATES PATENT AND TRADEMARK OFFICE

Commissioner for Patents
United States Patent and Trademark Office
P.O. Box 1450
Alexandria, VA 22313-1450
www.uspto.gov

Hewlett-Packard Company
Intellectual Property Administration
3404 E. Harmony Road
P.O. Box 272400
Fort Collins CO 80527-2400

COPY MAILED

MAR 04 2008

In re Application of	:	
Chen et al.	:	
Application No. 10/613,750	:	ON PETITION
Filed: July 3, 2003	:	
Attorney Docket No. B-5154 621086-5	:	

This is a decision on petition to withdraw the holding of abandonment under 37 CFR 1.181 filed January 22, 2008.

The petition to withdraw the holding of abandonment is **Dismissed**.

Any request for reconsideration should be filed within **TWO MONTHS** of the mailing date of this decision in order to be considered timely. 37 CFR 1.181(f). This time period may not be extended pursuant to 37 CFR 1.136.

This application was held abandoned August 16, 2007 for failure to timely reply to the non-final Office action mailed on May 15, 2007. The Notice set a three (3) month extendable time period for reply. A Notice of Abandonment was mailed January 7, 2008.

Petitioner asserts that a reply to the non-final Office action was submitted on August 15, 2007. As evidence, petitioner has submitted a copy of the reply which contains an amendment, specification, claims and figure 3. The response also includes a certificate of mailing dated August 15, 2007 pursuant to 37 CFR 1.8. Petitioner has also provided a copy of a postcard receipt with an Office stamp of August 20, 2007.

Pursuant to 37 CFR 1.8, correspondence will be considered timely if the party who forwarded such correspondence:

(1) Informs the Office of the previous mailing or transmission of the correspondence promptly after becoming aware that the Office has no evidence of receipt of the correspondence;

(2) Supplies an additional copy of the previously mailed or transmitted correspondence and certificate; and

(3) Includes a statement which attests on a personal knowledge basis or to the satisfaction of the Director to the previous timely mailing or transmission. If the correspondence was sent by facsimile transmission, a copy of the sending unit's report confirming transmission may be used to support this statement. The Office may require additional evidence to determine if the correspondence was timely filed.

Petitioner has failed to meet requirement (3). Petitioner has established that correspondence was received in the Office on August 20, 2007 via the postcard receipt. However since the date on the postcard receipt is not within the shortened statutory time period of reply, petitioner has failed to establish that the correspondence was timely mailed.

Petitioner must provide a statement which attest on personal knowledge that the documents were mailed on August 15, 2007. As stated in 37 CFR 1.8(b)(3) the statement that attests to the previous timely mailing or transmission of the correspondence must be on a personal knowledge basis, or to the satisfaction of the Director of the USPTO. If the statement attesting to the previous timely mailing is not made by the person who signed the Certificate of Mailing (i.e., there is no personal knowledge basis), then the statement attesting to the previous timely mailing should include evidence that supports the conclusion that the correspondence was actually mailed (e.g., copies of a mailing log establishing that correspondence was mailed for that application). A review of the certificate of mailing shows that it was executed by Richard P. Berg. A statement has not been provided by Mr. Berg nor has Attorney Krayner provided a statement.

It is further noted that Attorney Krayner has not been given the authority to prosecute the above-identified application. If appropriate a power of attorney should be provided.

Further correspondence with respect to this matter should be addressed as follows:

By mail:

Mail Stop Petition
Commissioner for Patents
P.O. Box 1450
Alexandria, VA 22313-1450

By facsimile: (571) 273-8300

By delivery service:
(FedEx, UPS, DHL, etc.)

U.S. Patent and Trademark Office
Customer Service Window,
Randolph Building
401 Dulany Street
Alexandria, VA 22314

Telephone inquiries concerning this matter should be directed to the undersigned at (571) 272-3215.

Charlema R. Grant

Charlema R. Grant
Petitions Attorney
Office of Petitions

UNITED STATES PATENT AND TRADEMARK OFFICE

Commissioner for Patents
United States Patent and Trademark Office
P.O. Box 1450
Alexandria, VA 22313-1450
www.uspto.gov

Hewlett-Packard Company
Intellectual Property Administration
3404 E. Harmony Road
P.O. Box 272400
Fort Collins CO 80527-2400

COPY MAILED

MAR 28 2008

OFFICE OF PETITIONS

In re Application of
Chen et al.
Application No. 10/613,750
Filed: July 3, 2003
Attorney Docket No. B-5154 621086-5

ON PETITION

This is a decision on the renewed petition to withdraw the holding of abandonment under 37 CFR 1.181 filed March 19, 2008.

The petition is **GRANTED**.

This application was held abandoned August 16, 2007 for failure to timely reply to the non-final Office action mailed on May 15, 2007. The Notice set a three (3) month extendable time period for reply. A Notice of Abandonment was mailed January 7, 2008. A petition filed under 37 CFR 1.181 was dismissed on March 4, 2008.

Petitioner asserts that a reply to the non-final Office action was submitted on August 15, 2007. As evidence, petitioner has submitted a copy of the reply which contains an amendment, specification, claims and figure 3. The response also includes a certificate of mailing dated August 15, 2007 pursuant to 37 CFR 1.8. Petitioner has also provided a copy of a postcard receipt with an Office stamp of August 20, 2007.

Pursuant to 37 CFR 1.8, correspondence will be considered timely if the party who forwarded such correspondence:

(1) Informs the Office of the previous mailing or transmission of the correspondence promptly after becoming aware that the Office has no evidence of receipt of the correspondence;

(2) Supplies an additional copy of the previously mailed or transmitted correspondence and certificate; and

(3) Includes a statement which attests on a personal knowledge basis or to the satisfaction of the Director to the previous timely mailing or transmission. If the correspondence was sent by facsimile transmission, a copy of the sending unit's report confirming transmission may be used to support this statement. The Office may require additional evidence to determine if the correspondence was timely filed.

The petition satisfies the above requirements of 37 CFR 1.8(b). Accordingly, the holding of abandonment for failure to timely file a reply to the Office action of May 15, 2007 is hereby withdrawn and the application restored to pending status.

The copy of the reply received will be accepted in place of the reply shown to have been mailed (or transmitted by facsimile) on January 22, 2008.

It is noted the address presented on the petition differs from the correspondence address of record. While a courtesy copy of this decision is being mailed to the person signing the present petition, all future correspondence will be directed to the address currently of record until such time as appropriate instructions are received to the contrary.

This application is being referred to Technology Center AU 2134 for appropriate action in the normal course of business on the reply received.

Telephone inquiries concerning this matter should be directed to the undersigned at (571) 272-3215.

Charlema R. Grant

Charlema R. Grant
Petitions Attorney
Office of Petitions

cc: Richard Berg
Ladas & Parry
5670 Wilshire Blvd, Ste 2100
Los Angeles, CA 90036

UNITED STATES PATENT AND TRADEMARK OFFICE

Commissioner for Patents
United States Patent and Trademark Office
P.O. Box 1450
Alexandria, VA 22313-1450
www.uspto.gov

MERCHANT & GOULD P.C.
P.O. BOX 2903
MINNEAPOLIS, MN 55402-0903

COPY MAILED

NOV 23 2004

OFFICE OF PETITIONS

ON PETITION

In re Application of :
Zimmel et al :
Application No. 10/613,757 :
Filed: July 2, 2003 :
Attorney Docket No. 2316.1789US01 :

This is a decision on the petition, filed November 15, 2004, under 37 CFR 1.313(c)(2) to withdraw the above-identified application from issue after payment of the issue fee.

The petition is **GRANTED**.

The above-identified application is withdrawn from issue for consideration of a submission under 37 CFR 1.114 (request for continued examination). See 37 CFR 1.313(c)(2).

Petitioner is advised that the issue fee paid on July 19, 2004 in the above-identified application cannot be refunded. If, however, the above-identified application is again allowed, petitioner may request that it be applied towards the issue fee required by the new Notice of Allowance.[1]

Telephone inquiries should be directed to Wan Laymon at (571) 272-3220.

This matter is being referred to Technology Center AU 2839 for processing of the request for continued examination under 37 CFR 1.114.

Wan Laymon
Petitions Examiner
Office of Petitions
Office of the Deputy Commissioner
for Patent Examination Policy

---

[1] The request to apply the issue fee to the new Notice may be satisfied by completing and returning the new Issue Fee Transmittal Form PTOL-85(b), which includes the following language thereon: "Commissioner for Patents is requested to apply the Issue Fee and Publication Fee (if any) or re-apply any previously paid issue fee to the application identified above." Petitioner is advised that, whether a fee is indicated as being due or not, the Issue Fee Transmittal Form **must** be completed and timely submitted to avoid abandonment. Note the language in bold text on the first page of the Notice of Allowance and Fee(s) Due (PTOL-85).

UNITED STATES PATENT AND TRADEMARK OFFICE

Commissioner for Patents
United States Patent and Trademark Office
P.O. Box 1450
Alexandria, VA 22313-1450
www.uspto.gov

COPY MAILED

SEP 29 2008

OFFICE OF PETITIONS

BOZICEVIC, FIELD & FRANCIS LLP
1900 UNIVERSITY AVENUE
SUITE 200
EAST PALO ALTO, CA 94303

In re Application of	:	
Lishan Aklog	:	
Application No. 10/613,761	:	DECISION ON PETITION
Filed: July 2, 2003	:	TO WITHDRAW
Attorney Docket No. FLEX - 001	:	FROM RECORD
	:	

This is a decision on the Request to Withdraw as attorney or agent of record under 37 C.F.R. § 1.36(b), filed February 17, 2006 and resubmitted July 13, 2006.

The request is **MOOT**.

A review of the file record indicates that the power of attorney to BOZICEVIC, FIELD & FRANCIS LLP, has been revoked by the assignee of the patent application on July 24, 2006. Accordingly, the request to withdraw under 37 C.F.R. § 1.36(b) is moot.

All future communications from the Office will continue to be directed to the correspondence address of record until otherwise notified by applicant.

Telephone inquires concerning this decision should be directed to the undersigned at 571-272-4914.

Ramesh Krishnamurthy

Ramesh Krishnamurthy
Petitions Examiner
Office of Petitions

SPE RESPONSE FOR CERTIFICATE OF CORRECTION

Paper No.: —

DATE : 7/16/08

TO SPE OF : ART UNIT 2839

SUBJECT : Request for Certificate of Correction for Appl. No.: 10/613764 Patent No: 7233731 B2

A response is requested with respect to a request for a certificate of correction.

With respect to the change(s) requested to correct Office and/or Applicant's errors, should the patent read as shown in the certificate of correction attached herewith or the COCIN document(s), in IFW images for the above-identified patented application? No new matter should be introduced, nor should the scope or meaning of the claims be changed.

If the response is for an IFW, within **7** days, please complete and forward the response, to the employee (named below) via scanning into application images, using document code **COCX**.

If the response is for a paper file wrapper, please complete the response and forward the response with the paper file wrapper, to the employee (named below), within **7** days, to:

Certificates of Correction Branch (CofC)
South Tower - 9A22
Palm Location 7580

VIRGINIA TOLBERT
Certificates of Correction Branch
703-308-9390 ext. 113

Thank You For Your Assistance

The request for issuing the above-identified correction(s) is hereby:
Note your decision on the appropriate box.

- ☐ **Approved** — **All** changes apply.
- ☐ **Approved in Part** — Specify below which changes **do not** apply.
- ☐ **Denied** — State the reasons for denial below.

Comments: _____

_____ **SPE** _____ **Art Unit**

SPE RESPONSE FOR CERTIFICATE OF CORRECTION

DATE : 7/16/08

Paper No.: —

TO SPE OF : ART UNIT 2839

SUBJECT : Request for Certificate of Correction for Appl. No.: 10/613764 Patent No: 7233731 B2

A response is requested with respect to a request for a certificate of correction.

With respect to the change(s) requested to correct Office and/or Applicant's errors, should the patent read as shown in the certificate of correction attached herewith or the COCIN document(s), in IFW images for the above-identified patented application? No new matter should be introduced, nor should the scope or meaning of the claims be changed.

If the response is for an IFW, within **7** days, please complete and forward the response, to the employee (named below) via scanning into application images, using document code **COCX**.

If the response is for a paper file wrapper, please complete the response and forward the response with the paper file wrapper, to the employee (named below), within **7** days, to:

Certificates of Correction Branch (CofC)
South Tower - 9A22
Palm Location 7580

VIRGINIA TOLBERT
Certificates of Correction Branch
703-308-9390 ext. 113

Thank You For Your Assistance

The request for issuing the above-identified correction(s) is hereby:
Note your decision on the appropriate box.

- ☒ **Approved** — **All** changes apply.
- ☐ **Approved in Part** — Specify below which changes **do not** apply.
- ☐ **Denied** — State the reasons for denial below.

Comments: _____

/Javaid Nasri/ — **SPE**

2839 — **Art Unit**

UNITED STATES PATENT AND TRADEMARK OFFICE

Commissioner for Patents
United States Patent and Trademark Office
P.O. Box 1450
Alexandria, VA 22313-1450
www.uspto.gov

BRENT P. JOHNSON
SHERIDAN ROSS P.C.
SUITE 1200
1560 BROADWAY
DENVER CO 80202-5141

COPY MAILED

DEC 23 2005

OFFICE OF PETITIONS

In re Application of
John K. Lowther
Application No. 10/613,777
Filed: February 2, 2004
Attorney Docket No: 7066-1-CIP3-CON

ON PETITION

This is a decision on the petition filed September 28, 2005, to withdraw the holding of abandonment under 37 CFR 1.181, or in the alternative, to revive the above identified application under 37 CFR 1.137(b). [1]

The petition to withdraw the holding of abandonment is **DISMISSED**.
The petition to revive under 37 CFR 1.137(b) is **GRANTED**.

The application was held abandoned on November 2, 2004, for failure to file a timely response to a restriction requirement September 29, 2004. The office action set a one month shortened statutory period. Accordingly, a Notice of Abandonment was mailed on June 3, 2005.

In the petition to withdraw the holding of abandonment under 37 CFR 1.181, petitioner asserts that in a telephone conversation between petitioner and the Examiner responsible for examining this application, the Examiner agreed to make the necessary

---

[1] Effective December 1, 1997, the provisions of 37 CFR 1.137(b) now provide that where the delay in reply was unintentional, a petition may be filed to revive an abandoned application or a lapsed patent pursuant to 37 CFR 1.137(b). A grantable petition filed under the provisions of 37 CFR 1.137(b) must be accompanied by:

(1) the required reply, unless previously filed. In a nonprovisional application abandoned for failure to prosecute, the required reply may be met by the filing of a continuing application. In an application or patent, abandoned or lapsed for failure to pay the issue fee or any portion thereof, the required reply must be the payment of the issue fee or any outstanding balance thereof.

(2) the petition fee as set forth in 37 CFR 1.17(m);

(3) a statement that the entire delay in filing the required reply from the due date for the reply until the filing of a grantable petition pursuant to 37 CFR 1.137(b) was unintentional. The Commissioner may required additional information where there is a question whether the delay was unintentional; and

(4) any terminal disclaimer (and fee as set forth in 37 CFR 1.20(d)) required pursuant to 37 CFR 1.137(c)).

elections and issue a first office action. Unfortunately however, the requirement for responding to communications mailed from the USPTO must be in writing as is required by 37 CFR 1.2. Petitioners are advised that in the absence of the restriction requirement not being withdrawn by the USPTO, then by law a response was required. The failure to file a response caused the application to become abandoned.

Applicants are not afforded an opportunity to withhold a written response to an office communication even based on a conversation and reliance upon that conversation with an office employee. In view thereof, the holding of abandonment will not be withdrawn.

With respect to the petition to revive, the petition fee in the amount of $1500.00 has been charged to deposit account no. 19-1970.

All other requirements under 37 CFR 1.137(b) having been met, this matter is being referred to Technology Center 3723 for appropriate action on the election filed September 28, 2005.

Telephone inquiries concerning this matter may be directed to the undersigned Petitions Attorney at (571) 272-3212.

Patricia Faison-Ball

Patricia Faison-Ball
Senior Petitions Attorney
Office of Petitions

UNITED STATES PATENT AND TRADEMARK OFFICE

UNITED STATES DEPARTMENT OF COMMERCE
United States Patent and Trademark Office
Address: COMMISSIONER FOR PATENTS
P.O. Box 1450
Alexandria, Virginia 22313-1450
www.uspto.gov

INTERNATIONAL BUSINESS MACHINES CORPORATION
Richard Lau
IPLAW DEPARTMENT / Bldg 008-2
2455 SOUTH ROAD - MS P386
POUGHKEEPSIE, NY 12601

Mail Date: 04/20/2010

Applicant	: Thomas B. Mathias	: DECISION ON REQUEST FOR
Patent Number	: 7620950	: RECALCULATION of PATENT
Issue Date	: 11/17/2009	: TERM ADJUSTMENT IN VIEW
Appliction No	: 10/613,779	: OF WYETH AND NOTICE OF INTENT TO
Filed	: 07/01/2003	: ISSUE CERTIFICATE OF CORRECTION
		:

The Request for Recalculation is **GRANTED** to the extent indicated.

The patent term adjustment has been determined to be **1900** days. The USPTO will *sua sponte* issue a certificate of correction reflecting the amount of PTA days determined by the recalculation.

Prior to the issuance of the certificate of correction, the USPTO will afford patentee an opportunity to be heard and request reconsideration. Accordingly, patentee has **one month or thirty (30) days**, whichever is longer, to file a request for reconsideration of this patent term adjustment calculation. See 35 U.S.C. 154(b)(3)(B)(ii) and 37 CFR 1.322(a)(4). No extensions of time will be granted under 37 CFR 1.136.

Patentee should use document code PET.OP if electronically filing a request for reconsideration of this patent term adjustment calculation. The patentee must also include the information required by 37 CFR 1.705(b)(2) and the fee required by 37 CFR 1.18(e). If patentee does not file a timely request for reconsideration of this patent term adjustment calculation including the information required by 37 CFR 1.705(b)(2) and the fee required by 37 CFR 1.18(e), the USPTO will issue a certificate of correction reflecting the PTA determination noted above.

Patentee should be aware that in order to preserve the right to review in the United States District Court for the District of Columbia of the USPTO patent term adjustment determination, patentee must ensure that he or she also take the steps required under 35 U.S.C. 154(b)(4)(A) in a timely manner. Nothing in the request for recalculation should be construed as providing an alternative time frame for commencing a civil action under 35 U.S.C. 154(b)(4)(A).

Any questions concerning this decision should be directed to the Office of Patent Legal Administration at 571-272-7702.

UNITED STATES PATENT AND TRADEMARK OFFICE

Commissioner for Patents
United States Patent and Trademark Office
P.O. Box 1450
Alexandria, VA 22313-1450
www.uspto.gov

Patrick W. Rashe
Armstrong Teasdale, LLP
One Metropolitan Square, Suite 2600
St. Louis, MO 63102

COPY MAILED

AUG 07 2008

OFFICE OF PETITIONS

In re Application of	:	
Jiang Hsieh, et. al.	:	
Application No. 10/613,791	:	ON PETITION
Filed: July 3, 2003	:	
Attorney Docket No. 15-CT	:	

This is a decision on the petition under 37 CFR 1.137(b), filed on January 18, 2008, to revive the above-identified application.

There is no indication that the person signing the instant petition was ever given a power of attorney or authorization of agent to prosecute the above-identified application. However, in accordance with 37 CFR 1.34(a), the signature of William J. Zychlewicz appearing on the petition shall constitute a representation to the United States Patent and Trademark Office that he is authorized to represent the particular party in whose behalf he acts.

The petition satisfies the requirements of 37 CFR 1.137(b) in that petitioner has supplied (1) the reply in the form of a Request for Continued Examination (RCE) under 37 CFR 1.114, with the $810 filing fee and an amendment; (2) the petition fee of $1,540; and (3) a proper statement of unintentional delay. Therefore, the petition is **GRANTED**.

This application is being revived for consideration of the RCE.

The application file is being referred to Technology Center Art Unit 2882, for further processing.

Telephone inquiries concerning this decision should be directed to the undersigned at (571) 272-3226.

Andrea Smith
Petitions Examiner
Office of Petitions

UNITED STATES PATENT AND TRADEMARK OFFICE

Commissioner for Patents
United States Patent and Trademark Office
P.O. Box 1450
Alexandria, VA 22313-1450
www.uspto.gov
DIW Aug-07

JEFFREY M. GREENMAN
BAYER HEALTHCARE LLC
400 MORGAN LANE
WEST HAVEN CT 06516

COPY MAILED

AUG 21 2007

OFFICE OF PETITIONS

In re Application of	:	
Sirinyan et al.	:	
Application Number: 10/613819	:	DECISION ON PETITION
Filing Date: 07/03/2003	:	
Attorney Docket Number: AH / L A 31 923C2	:	

This is a decision on the petition filed on 26 June, 2007, under 37 CFR 1.137(b), [1] to revive the above-identified application.

The petition is **GRANTED**.

The application became abandoned on 27 July, 2005, for failure to timely submit a reply to the final Office action mailed on 26 April, 2005, which set a three (3) month shortened statutory period for reply. Notice of Abandonment was mailed on 19 December, 2005.

Petitioner has filed a Request for Continued Examination (RCE) and an amendment as the submission required under 37 CFR 1.114.

---

[1] Effective December 1, 1997, the provisions of 37 CFR 1.137(b) now provide that where the delay in reply was unintentional, a petition may be filed to revive an abandoned application or a lapsed patent pursuant to 37 CFR 1.137(b). A grantable petition filed under the provisions of 37 CFR 1.137(b) must be accompanied by:

(1) the required reply, unless previously filed. In a nonprovisional application abandoned for failure to prosecute, the required reply may be met by the filing of a continuing application. In a nonprovisional utility or plant application filed on or after June 8, 1995, and abandoned for failure to prosecute, the required reply may also be met by the filing of a request for continuing examination in compliance with § 1.114. In an application or patent, abandoned or lapsed for failure to pay the issue fee or any portion thereof, the required reply must be the payment of the issue fee or any outstanding balance thereof. In an application, abandoned for failure to pay the publication fee, the required reply must include payment of the publication fee.

(2) the petition fee as set forth in 37 CFR 1.17(m);

(3) a statement that the entire delay in filing the required reply from the due date for the reply until the filing of a grantable petition pursuant to 37 CFR 1.137(b) was unintentional. The Commissioner may required additional information where there is a question whether the delay was unintentional; and

(4) any terminal disclaimer (and fee as set forth in 37 CFR 1.20(d)) required pursuant to 37 CFR 1.137(c)).

It is not apparent whether the person signing the statement of unintentional delay was in a position to have firsthand or direct knowledge of the facts and circumstances of the delay at issue. Nevertheless, such statement is being treated as having been made as the result of a reasonable inquiry into the facts and circumstances of such delay.[2] In the event that such an inquiry has not been made, petitioner must make such an inquiry. If such inquiry results in the discovery that it is not correct that the entire delay in filing the required reply from the due date for the reply until the filing of a grantable petition pursuant to 37 CFR 1.137(b) was unintentional, petitioner must notify the Office.

Further, there is no indication that petitioner herein was ever empowered to prosecute the instant application. If petitioner desires to receive future correspondence regarding this application, the appropriate power of attorney documentation must be mailed. A courtesy copy of this decision will be mailed to petitioner. However, all future correspondence will be directed to the address of record until such time as appropriate instructions are received to the contrary.

This application is being referred to Technology Center 1623 for further processing.

Telephone inquiries concerning this matter may be directed to the undersigned at (571) 272-3231.

D Wood

Douglas I. Wood
Senior Petitions Attorney
Office of Petitions

Cc:

SHOOK, HARDY & BACON LLP
2555 GRAND BLVD
KANSAS CITY MO 64108-2613

---

[2] See 37 CFR 10.18(b) and Changes to Patent Practice and Procedure; Final Rule Notice, 62 Fed. Reg. 53131, 53178 (October 10, 1997), 1208 Off. Gaz. Pat. Office 63, 103 (October 21, 1997).

UNITED STATES PATENT AND TRADEMARK OFFICE

COMMISSIONER FOR PATENTS
UNITED STATES PATENT AND TRADEMARK OFFICE
P.O. BOX 1450
ALEXANDRIA, VA 22313-1450
www.uspto.gov

Hughes Electronics Corporation
Patent Docket Administration
Bldg. 1, Mail Stop A109
P.O. Box 956
El Segundo, California 90245-0956

MAILED

JUN 17 2004

Technology Center 2100

In re Application of: Mustafa Eroz et al.	)	
Application No.: 10/613,823	)	
Filed: July 7, 2003	)	**DECISION ON PETITION**
For: METHOD AND SYSTEM FOR	)	**FOR ACCELERATED**
PROVIDING LOW DENSITY	)	**EXAMINATION UNDER**
PARITY CHECK (LDPC)	)	**M.P.E.P. §708.02(VIII)**
ENCODING	)	

This is a decision on the petition, filed February 27, 2004 and resubmitted May 3, 2004, under 37 C.F.R. §1.102(d) and M.P.E.P. §708.02(VIII): Accelerated Examination, to make the above-identified application special.

M.P.E.P. §708.02, Section VIII which sets out the prerequisites for a grantable petition for Accelerated Examination under 37 C.F.R. §1.102(d) states in relevant part:

A new application (one which has not received any examination by the examiner) may be granted special status provided that applicant (and this term includes applicant's attorney or agent) complies with each of the following items:

(a) Submits a petition to make special accompanied by the fee set forth in 37 CFR 1.17(h);

(b) Presents all claims directed to a single invention, or if the Office determines that all the claims presented are not obviously directed to a single invention, will make an election without traverse as a prerequisite to the grant of special status.

(c) Submits a statement(s) that a pre - examination search was made, listing the field of search by class and subclass, publication, Chemical Abstracts, foreign patents, etc. A search made by a foreign patent office satisfies this requirement;

(d) Submits one copy each of the references deemed most closely related to the subject matter encompassed by the claims if said references are not already of record; and

(e) ***Submits a detailed discussion*** of the references, which discussion points out, with the particularity required by 37 CFR 1.111(b) and (c), how the claimed subject matter is

patentable over the references.

In those instances where the request for this special status does not meet all the prerequisites set forth above, ***applicant will be notified and the defects in the request will be stated.*** The application will remain in the status of a new application awaiting action in its regular turn. In those instances where a request is defective in one or more respects, applicant will be given one opportunity to perfect the request in a renewed petition to make special. If perfected, the request will then be granted. If not perfected in the first renewed petition, any additional renewed petitions to make special may or may not be considered at the discretion of the Group Special Program Examiner.

Applicant's submission is deficient in that there is no detailed discussion of the reference as required by section (e) to the extent required by 37 CFR 1.111(b) and (c). Specifically, the submission is deficient in that it merely reproduces the Abstracts provided in each reference accompanied by a statement that the particular reference does not include the features of the claimed invention. Note that the *identical statement*, that the entirety of independent claim 1 and the preferable features of claim 8 are not taught or suggested by the reference, is presented for each of the fifteen references purported to be "most closely related". That is, the submission does not satisfy the requirement, as it does not provide a ***detailed discussion*** of the references and it does not point out how the ***claimed subject matter is patentable over the references.***

Accordingly, the Petition is **DISMISSED**. The application file is being forwarded to Central Files to await examination in its proper turn based on its effective filing date.

Any request for reconsideration must be filed within two months of the mailing date of this decision.

Pinchus M. Laufer
Special Programs Examiner
Technology Center 2100
Computer Architecture, Software, and Information Security
(703) 306-4160

UNITED STATES PATENT AND TRADEMARK OFFICE

Commissioner for Patents
United States Patent and Trademark Office
P.O. Box 1450
Alexandria, VA 22313-1450
www.uspto.gov

Hughes Electronics Corporation
Patent Docket Administration
Bldg. 1, Mail Stop A109
P.O. Box 956
El Segundo, California 90245-0956

MAIL

NOV 2 6 2004

DIRECTOR OFFICE
TECHNOLOGY CENTER 2100

In re Application of: Mustafa Eroz et al.	)	
Application No.: 10/613,823	)	
Filed: July 7, 2003	)	**DECISION ON PETITION**
For: METHOD AND SYSTEM FOR	)	**FOR ACCELERATED**
PROVIDING LOW DENSITY	)	**EXAMINATION UNDER**
PARITY CHECK (LDPC)	)	**M.P.E.P. §708.02(VIII)**
ENCODING	)	

This is a decision on the petition, filed August 9, 2004 under 37 C.F.R. §1.102(d) and M.P.E.P. §708.02(VIII): Accelerated Examination, to make the above-identified application special. The petition was filed in response to a dismissal of the original petition filed February 27, 2004.

The original petition was dismissed for failing to provide a detailed discussion of the references and for not specifically pointing out how the claimed subject matter is patentable over the references.

The newly submitted petition corrects the first deficiency in that detailed descriptions of the references have now been provided. However, the second deficiency has not been cured. As stated in the first decision:

> Specifically, the submission is deficient in that it merely reproduces the Abstracts provided in each reference accompanied by a statement that the particular reference does not include the features of the claimed invention. Note that the *identical statement*, that the entirety of independent claim 1 and the preferable features of claim 8 are not taught or suggested by the reference, is presented for each of the fifteen references purported to be "most closely related". That is, the submission does not satisfy the requirement, as it does not provide a ***detailed discussion*** of the references and it does not point out how the ***claimed subject matter is patentable over the references***.

Applicant has provided the same statement reproducing the entirety of independent claim 1 and has supplemented it with statements related to features not present in the claims. Thus, Applicant has failed to specifically point out what feature (or features) of the claim are not found in the references.

Accordingly, the Petition is **DENIED**. The application file is being forwarded to Central Files to await examination in its proper turn based on its effective filing date.

Pinchus M. Laufer
Special Programs Examiner
Technology Center 2100
Computer Architecture, Software, and Information Security
(571) 272-3599

UNITED STATES PATENT AND TRADEMARK OFFICE

COMMISSIONER FOR PATENTS
UNITED STATES PATENT AND TRADEMARK OFFICE
P.O. BOX 1450
ALEXANDRIA, VA 22313-1450
www.uspto.gov

Hughes Electronics Corporation
Patent Docket Administration
Bldg.. 1, Mail Stop A109
P.O. Box 956
El Segundo, California 90245-0956

MAILED
JUN 0 2 2004
Technology Center 2100

In re Application of: Mustafa Eroz et al.	)	
Application No.: 10/613,824	)	**DECISION ON PETITION**
Filed: July 3, 2003	)	**FOR ACCELERATED**
For: METHOD AND SYSTEM FOR	)	**EXAMINATION UNDER**
ROUTING IN LOW DENSITY	)	**M.P.E.P. §708.02(VIII)**
PARITY CHECK (LDPC)	)	
DECODERS	)	

This is a decision on the petition, filed February 27, 2004 under 37 C.F.R. §1.102(d) and M.P.E.P. §708.02(VIII): Accelerated Examination, to make the above-identified application special.

M.P.E.P. §708.02, Section VIII which sets out the prerequisites for a grantable petition for Accelerated Examination under 37 C.F.R. §1.102(d) states in relevant part:

A new application (one which has not received any examination by the examiner) may be granted special status provided that applicant (and this term includes applicant's attorney or agent) complies with each of the following items:

(a) Submits a petition to make special accompanied by the fee set forth in 37 CFR 1.17(h);

(b) Presents all claims directed to a single invention, or if the Office determines that all the claims presented are not obviously directed to a single invention, will make an election without traverse as a prerequisite to the grant of special status.

(c) Submits a statement(s) that a pre - examination search was made, listing the field of search by class and subclass, publication, Chemical Abstracts, foreign patents, etc. A search made by a foreign patent office satisfies this requirement;

(d) Submits one copy each of the references deemed most closely related to the subject matter encompassed by the claims if said references are not already of record; and

(e) ***Submits a detailed discussion*** of the references, which discussion points out, with the particularity required by 37 CFR 1.111(b) and (c), how the claimed subject matter is patentable over the references.

> In those instances where the request for this special status does not meet all the prerequisites set forth above, ***applicant will be notified and the defects in the request will be stated***. The application will remain in the status of a new application awaiting action in its regular turn. In those instances where a request is defective in one or more respects, applicant will be given one opportunity to perfect the request in a renewed petition to make special. If perfected, the request will then be granted. If not perfected in the first renewed petition, any additional renewed petitions to make special may or may not be considered at the discretion of the Group Special Program Examiner.

Applicant's submission is deficient in that it does not comply with (e) above. That is, it does not contain a detailed discussion of the references as required by section (e) above to the extent required by 37 CFR 1.111(b) and (c). Applicant's submission merely reproduces or paraphrases the Abstracts provided in each reference accompanied by a statement that the particular reference fails to disclose "a combination of method and structure for decoding LDPC-Coded signals ...". His distinction is a recitation of the entirety of independent claim 1 except for the step of outputting the signal.. Note that the *identical statement*, is presented for each of the nine references purported to be "most closely related". That is, the submission does not satisfy the requirement, as it does not provide a ***detailed discussion*** of the references and it does not point out how the ***claimed subject matter is patentable over the references***.

Accordingly, the Petition is **DISMISSED**. The application file is being forwarded to Central Files to await examination in its proper turn based on its effective filing date.

Any request for reconsideration must be filed within two months of the mailing date of this decision.

Pinchus M. Laufer
Special Programs Examiner
Technology Center 2100
Computer Architecture, Software, and Information Security
(703) 306-4160

UNITED STATES PATENT AND TRADEMARK OFFICE

Commissioner for Patents
United States Patent and Trademark Office
P.O. Box 1450
Alexandria, VA 22313-1450
www.uspto.gov

Hughes Electronics Corporation
Patent Docket Administration
Bldg.. 1, Mail Stop A109
P.O. Box 956
El Segundo, California 90245-0956

MAILED

NOV 2 6 2004

Technology Center 2100

In re Application of: Mustafa Eroz et al.	)	**DECISION ON PETITION FOR ACCELERATED EXAMINATION UNDER M.P.E.P. §708.02(VIII)**
Application No.: 10/613,824	)	
Filed: July 3, 2003	)	
For: METHOD AND SYSTEM FOR ROUTING IN LOW DENSITY PARITY CHECK (LDPC) DECODERS	)	

This is a decision on the petition, filed August 9, 2004 under 37 C.F.R. §1.102(d) and M.P.E.P. §708.02(VIII): Accelerated Examination, to make the above-identified application special. The petition was filed in response to a dismissal of the original petition filed February 27, 2004.

The original petition was dismissed for failing to provide a detailed discussion of the references and for not specifically pointing out how the claimed subject matter is patentable over the references.

The newly submitted petition corrects the first deficiency in that detailed descriptions of the references have now been provided. However, the second deficiency has not been cured. As stated in the first decision:

> Applicant's submission merely reproduces or paraphrases the Abstracts provided in each reference accompanied by a statement that the particular reference fails to disclose "a combination of method and structure for decoding LDPC-Coded signals ...". This distinction is a recitation of the entirety of independent claim 1 except for the step of outputting the signal.. Note that the *identical statement*, is presented for each of the nine references purported to be "most closely related". That is, the submission does not satisfy the requirement, as it does not provide a ***detailed discussion*** of the references and it does not point out how the ***claimed subject matter is patentable over the references***.

Applicant has provided the same statement as in the original petition and has supplemented it with statements related to features not present in the claims. Thus, Applicant has failed to specifically point out what feature (or features) of the claim are not found in the references.

Accordingly, the Petition is **DENIED**. The application file is being forwarded to Central Files to await examination in its proper turn based on its effective filing date.

Pinchus M. Laufer
Special Programs Examiner
Technology Center 2100
Computer Architecture, Software, and Information Security
(571) 272-3599

UNITED STATES PATENT AND TRADEMARK OFFICE

UNITED STATES DEPARTMENT OF COMMERCE
United States Patent and Trademark Office
Address: COMMISSIONER FOR PATENTS
P.O. Box 1450
Alexandria, Virginia 22313-1450
www.uspto.gov

INGRASSIA FISHER & LORENZ, P.C. (FS)
7010 E. COCHISE ROAD
SCOTTSDALE, AZ 85253

Mail Date: 04/20/2010

Applicant	: Robert W. Boesel	: DECISION ON REQUEST FOR
Patent Number	: 7596134	: RECALCULATION of PATENT
Issue Date	: 09/29/2009	: TERM ADJUSTMENT IN VIEW
Appliction No	: 10/613,853	: OF WYETH AND NOTICE OF INTENT TO
Filed	: 07/02/2003	: ISSUE CERTIFICATE OF CORRECTION
		:

The Request for Recalculation is **GRANTED** to the extent indicated.

The patent term adjustment has been determined to be **1810** days. The USPTO will *sua sponte* issue a certificate of correction reflecting the amount of PTA days determined by the recalculation.

Prior to the issuance of the certificate of correction, the USPTO will afford patentee an opportunity to be heard and request reconsideration. Accordingly, patentee has **one month or thirty (30) days**, whichever is longer, to file a request for reconsideration of this patent term adjustment calculation. See 35 U.S.C. 154(b)(3)(B)(ii) and 37 CFR 1.322(a)(4). No extensions of time will be granted under 37 CFR 1.136.

Patentee should use document code PET.OP if electronically filing a request for reconsideration of this patent term adjustment calculation. The patentee must also include the information required by 37 CFR 1.705(b)(2) and the fee required by 37 CFR 1.18(e). If patentee does not file a timely request for reconsideration of this patent term adjustment calculation including the information required by 37 CFR 1.705(b)(2) and the fee required by 37 CFR 1.18(e), the USPTO will issue a certificate of correction reflecting the PTA determination noted above.

Patentee should be aware that in order to preserve the right to review in the United States District Court for the District of Columbia of the USPTO patent term adjustment determination, patentee must ensure that he or she also take the steps required under 35 U.S.C. 154(b)(4)(A) in a timely manner. Nothing in the request for recalculation should be construed as providing an alternative time frame for commencing a civil action under 35 U.S.C. 154(b)(4)(A).

Any questions concerning this decision should be directed to the Office of Patent Legal Administration at 571-272-7702.

UNITED STATES PATENT AND TRADEMARK OFFICE

Commissioner for Patents
United States Patent and Trademark Office
P.O. Box 1450
Alexandria, VA 22313-1450
www.uspto.gov

LIPSITZ & McALLISTER, LLC
755 MAIN STREET
MONROE, CT 06468

COPY MAILED

APR 24 2007

OFFICE OF PETITIONS

In re Application of	:	
Krit Panusopone et al	:	
Application No. 10/613,865	:	DECISION GRANTING PETITION
Filed: July 3, 2003	:	UNDER 37 CFR 1.137(b)
Attorney Docket No. GIC-600.1	:	

This is a decision on the petition under 37 CFR 1.137(b), filed August 17, 2006, to revive the above-identified application.

The petition is **GRANTED**.

The above-identified application became abandoned for failure to reply in a timely manner to the non-final Office action mailed August 15, 2005, which set a shortened statutory period for reply of three (3) months. No extensions of time under the provisions of 37 CFR 1.136(a) were obtained. Accordingly, the above-identified application became abandoned on November 16, 2005. A Notice of Abandonment was mailed on March 3, 2006.

The petition satisfies the conditions for revival pursuant to the provisions of 37 CFR 1.137(b) in that (1) the reply, (2) the $1,500 petition fee, and (3) the required statement of unintentional delay have been received. Accordingly, the reply to the non-final Office action of August 15, 2005 is accepted as having been unintentionally delayed.

It is not apparent whether the person signing the statement of unintentional delay was in a position to have firsthand or direct knowledge of the facts and circumstances of the delay at issue. Nevertheless, such statement is being treated as having been made as the result of a reasonable inquiry into the facts and circumstances of such delay. See 37 CFR 10.18(b) and Changes to Patent Practice and Procedure; Final Rule Notice, 62 Fed. Reg. 53131, 53178 (October 10, 1997), 1203 Off. Gaz. Pat. Office 63, 103 (October 21, 1997). In the event that such an inquiry has not been made, petitioner must make such an inquiry. If such inquiry results in the discovery that it is not correct that the entire delay in filing the required reply from the due date for the reply until the filing of a grantable petition pursuant to 37

CFR 1.137(b) was unintentional, petitioner must notify the Office.

There is no indication that the person signing the petition was ever given a power of attorney or authorization of agent to prosecute the above-identified application. If the person signing the petition desires to receive future correspondence regarding this application, the appropriate power of attorney or authorization of agent must be submitted. While a courtesy copy of this decision is being mailed to the person signing the petition, all future correspondence will be directed to the address currently of record until such time as appropriate instructions are received to the contrary.

Telephone inquiries concerning this decision should be directed to the undersigned at (571) 272-3218.

This matter is being referred to Technology Center AU 2621 for appropriate action in the normal course of business on the reply received August 15, 2005.

Frances Hicks
Petitions Examiner
Office of Petitions

cc:

Thomas Bethea, Jr.
101 Tournament Drive
Horsham, PA 19044

UNITED STATES PATENT AND TRADEMARK OFFICE

Commissioner for Patents
United States Patent and Trademark Office
P.O. Box 1450
Alexandria, VA 22313-1450
www.uspto.gov
DIW 09-04

DERGOSITS & NOAH LLP
SUITE 1450
FOUR EMBARCADERO CENTER
SAN FRANCISCO CA 94111

COPY MAILED

SEP 30 2004

OFFICE OF PETITIONS

In re Application of	:
Lipton et al.	:
Application No. 10/613,866	: DECISION DISMISSING
Filed: 2 July, 2003	: PETITION
Atty Docket No. 300.82	:

This is a decision in reference to the petition styled under 37 CFR 1.182, filed on 3 December, 2003, which is treated as a petition under 37 CFR 1.53 requesting that the above-identified application be accorded a filing date of 2 July, 2003, with Figure 3 described in the specification as a part of the original disclosure.

The Office apologizes for the delay in responding to the present petition.

On 2 July, 2003, the application was filed.

On 1 October, 2003, the Office of Initial Patent Examination (OIPE) mailed a Notice of Omitted Item(s) in a Nonprovisional Application stating that, *inter alia*, the application had been accorded a filing date of 2 July, 2003, but that Figure 3 described in the specification (description and claims) appeared to have been omitted from the application.

In response, on 3 December, 2003 (certificate of mailing date 1 December, 2003), the present petition was filed, accompanied by a copy of seven (7) drawing sheets. Petitioners concede that Figure 3 was inadvertently omitted from the application papers filed on 2 July, 2003, but state that the omitted Figure 3 is "virtually identical" to a drawing figure contained in a provisional application, No. 60/393,605.

The petition is <u>dismissed</u>.

The mailing of a "Notice of Omitted Items" permits the applicant to either: (1) promptly establish prior receipt in the PTO of the drawing(s) at issue (generally by way of a date-stamped postcard receipt (MPEP 503)), or (2) promptly submit the omitted drawing(s) in a nonprovisional application and accept the date of such submission as the application filing date. An applicant asserting that the missing drawings were in fact deposited in the PTO with the application papers must file a petition (and the appropriate petition fee) with evidence of such deposit. An applicant desiring to submit the omitted drawings in a nonprovisional application and accept the date of such submission as the application filing date must file any omitted drawing(s) with an oath or declaration in compliance with 37 CFR 1.63 and 1.64 referring to such drawing(s) and a petition under 37 CFR 1.182 (with the petition fee under 37 CFR 1.17(h)) requesting the later filing date within two months of the date of the "Notice of Omitted Items" (37 CFR 1.181(f)).

In this case, however, petitioners neither assert that the missing drawing was deposited on 2 July, 2003, nor request the 3 December, 2003 (the date the drawing was supplied), filing date. Rather, petitioners simply state that the omitted Figure 3 is identical to a figure contained in another application.

MPEP 201.06(c) states that:

> . . . an applicant may incorporate by reference the prior application by including, in the application-as-filed, a statement that such specifically enumerated prior application or applications are "hereby incorporated herein by reference." The statement may appear in the specification or in the application transmittal letter. The inclusion of this incorporation by reference of the prior application(s) will permit an applicant to amend the continuing application to include any subject matter in such prior application(s), <u>without the need for a petition</u>. (emphasis supplied)

However, a review of the transmittal letter and specification for the present application reveals that the prior provisional application, No. 60/393,605, was not incorporated by reference into the disclosure of this application. The mere reference to another application is not an incorporation of anything therein

into the application containing the reference.[1] To allow one to retroactively incorporate by reference a second application into a first application would allow the addition of matter into an application that was not present on filing which would be contrary to our statutes and rules. Still further, the question of new matter is not an issue here. Figure 3 was simply not filed in the USPTO on 2 July, 2003. Matter included in Figure 3 may be submitted as an amendment for consideration by the examiner under MPEP sections 608.02(p) and 608.04. In view of the above, the application cannot be accorded 2 July, 2003, as the application filing date with drawing Figure 3 as a part of the original disclosure.

Petitioners may wish to consider filing a petition under 37 CFR 1.182 requesting that the Office accord the application a filing date of 3 December, 2003, using the copy of Figure 3 supplied on that date.

The application will be processed using only the application papers present on filing. The copy of the seven (7) sheets of drawings filed with the present petition will not be processed for examination, but will be retained in the application file.

As this petition was not necessitated by an error on the part of the Office, the petition fee will not be refunded.

The application is being returned to Initial Patent Examination Division for further processing with a filing date of 2 July, 2003, using only the application papers filed on that date.

Telephone inquiries concerning this matter may be directed to the undersigned at (571)272-3231.

D Wood

Douglas I. Wood
Senior Petitions Attorney
Office of Petitions

---

[1] See In re de Seversky, 177 USPQ 144, 146 (C.C.P.A. 1973); Dart Industries v. Banner, 207 USPQ 273, 276 (D.C. Cir. 1980).

UNITED STATES PATENT AND TRADEMARK OFFICE

Commissioner for Patents
United States Patent and Trademark Office
P.O. Box 1450
Alexandria, VA 22313-1450
www.uspto.gov

COPY MAILED

OCT 12 2007

OFFICE OF PETITIONS

SMYRSKI LAW GROUP,
A PROFESSIONAL CORPORATION
3310 AIRPORT AVENUE, SW
SANTA MONICA, CA 90405

In re Application of	:	
Lenny Lipton et al.	:	
Application No. 10/613,866	:	DECISION ON PETITION
Filed: July 2, 2003	:	TO MAKE SPECIAL UNDER
Attorney Docket No. 300.82	:	37 CFR 1.102(c)(1)
	:	

This is a decision on the petition under 37 CFR 1.102(c)(1), filed August 11, 2006, to make the above-identified application special based on applicant's age as set forth in M.P.E.P. § 708.02, Section IV.

The petition is **GRANTED**.

A grantable petition to make an application special under 37 CFR 1.102(c)(1) and MPEP § 708.02, Section IV: Applicant's Age must be accompanied by evidence showing that at least one of the applicants is 65 years of age, or more, such as a birth certificate or a statement by applicant. No fee is required

The instant petition includes a statement by the applicant and a photocopy of applicant's passport. Accordingly, the above-identified application has been accorded "special" status.

Telephone inquiries concerning this decision should be directed to Kimberly Inabinet at 571-272-4618.

All other inquiries concerning either the examination or status of the application should be directed to the Technology Center.

Upon completion of the pre-examination processing by the Office of Initial Patent Examining, this application will be referred to Technology Center Art Unit 2621 for action on the merits commensurate with this decision.

Kimberly Inabinet

Kimberly Inabinet
Petitions Examiner
Office of Petitions

UNITED STATES PATENT AND TRADEMARK OFFICE

COMMISSIONER FOR PATENTS
UNITED STATES PATENT AND TRADEMARK OFFICE
P.O. BOX 1450
ALEXANDRIA, VA 22313-1450
www.uspto.gov

MAIL

MAY 03 2004

DIRECTOR OFFICE
TECHNOLOGY CENTER 2600

Hughes Electronics Corporation
Patent Docket Administration
Bldg. 1, Mail Stop A109
P.O. Box 956
El Segundo CA 90245-0956

In re Application of:
Mustafa Eroz, et al.
Application No. 10/613,877
Filed: July 3, 2003
For: BIT LABELING FOR AMPLITUDE PHASE SHIFT CONSTELLATION USED WITH LOW DENSITY PARITY CHECK (LDPC) CODES

DECISION ON PETITION TO MAKE SPECIAL

This is a decision on the petition filed February 27, 2004 under Manual of Patent Examination Procedure §708.02, VIII requesting accelerated examination.

The petition under Manual of Patent Examination Procedure §708.02, VIII, must:
(1) be filed prior to receiving any examination by the examiner,
(2) be accompanied by the required fee- $130,
(3) the claims should be directed to a single invention (if it is determined that the claims pertain to more than one invention, then applicant will have to make an election without traverse or forfeit accelerated examination status),
(4) state that a pre-examination search was made, and fully discuss the search method employed, such as classes and subclasses searched, publications, Chemical abstracts, patents, etc. A search made by a foreign patent office satisfies this requirement,
(5) be accompanied by a copy of each of the references most closely related to the subject matter encompassed by the claims if said references are not already of record,
(6) fully discuss the references, pointing out with the particularity required by 37 C.F.R. §1.111(b) and (c), how the claimed subject matter is patentable over the references.

The petition meets all the above-listed requirements. Accordingly, the petition is **GRANTED**.

The application will retain its special status throughout its entire prosecution, including any appeal to the Board of Patent Appeals and Interferences, subject only to diligent prosecution by the applicant. The application will be forwarded to the examiner for expedited action in its turn.

Krista Zele
Special Program Examiner
Technology Center 2600
Communications
(703) 305-4701

BEST AVAILABLE COPY

UNITED STATES PATENT AND TRADEMARK OFFICE

COMMISSIONER FOR PATENTS
UNITED STATES PATENT AND TRADEMARK OFFICE
P.O. BOX 1450
ALEXANDRIA, VA 22313-1450
www.uspto.gov

INTELLECTUAL PROPERTY DEPARTMENT
DURA AUTOMOTIVE SYSTEMS, INC.
2791 RESEARCH DR.
ROCHESTER HILLS, MI 48309

COPY MAILED

OCT 0 9 2003

OFFICE OF PETITIONS

In re Application of
Casimir R. Kiczek et al
Application No. 10/613,890
Filed: July 3, 2003
Attorney Docket No. 02-11

ON PETITION

This is a decision on the petition under 37 CFR 1.137(b), filed September 29, 2003, to revive the above-identified application.

The petition is **GRANTED**.

37 CFR 1.137(b)(3) requires a statement that the entire delay in filing the required reply from the due date for the reply until the filing of a grantable petition pursuant to 37 CFR 1.137(b) was unintentional. If the statement contained in the instant petition varies from the language required by 37 CFR 1.137(b)(3), the statement contained in the instant petition is being construed as the statement required by 37 CFR 1.137(b)(3) and petitioner must notify the Office if this is **not** a correct interpretation of the statement contained in the instant petition.

Telephone inquiries concerning this decision should be directed to Irvin Dingle at (703) 306-5684.

The application file is being forwarded to the Initial Patent Examination Unit.

Irvin Dingle
Petitions Examiner
Office of Petitions
Office of the Deputy Commissioner
for Patent Examination Policy

UNITED STATES PATENT AND TRADEMARK OFFICE

COMMISSIONER FOR PATENTS
UNITED STATES PATENT AND TRADEMARK OFFICE
P.O. BOX 1450
ALEXANDRIA, VA 22313-1450
www.uspto.gov

INTELLECTUAL PROPERTY DEPARTMENT
DURA AUTOMOTIVE SYSTEMS, INC.
2791 RESEARCH DRIVE
ROCHESTER HILLS, MI 48309

COPY MAILED

OCT 2 1 2003

OFFICE OF PETITIONS

In re Application of	:	
Casimir R. Kiczek et al	:	
Application No. 10/613,890	:	DECISION ON PETITION
Filed: July 3, 2003	:	
Attorney Docket No. 02-11	:	

This is a substitute decision on the petition under 37 CFR 1.137(b), filed September 29, 2003, to revive the above-identified application. The decision mailed October 9, 2003 is vacated for the reason stated below.

The petition is dismissed as moot.

The previous decision granting the petition to revive under 37 CFR 1.137(b) was mailed in error. In this regard, Office computer database records for this file indicate that a Notice to File Missing Parts of Nonprovisional Application requiring the submission of an executed oath or declaration and surcharge was mailed October 1, 2003, setting a period for reply of two months. There is no other indication in the file record of a Notice having been mailed previous to the Notice of October 1, 2003. Therefore, since the period for reply to the Notice of October 1, 2003 has not yet expired, this application is not in fact abandoned.

An executed "Declaration and Power of Attorney," as well as the required surcharge, was received prior to the mailing of the Notice of October 1, 2003. Therefore, the Notice of October 1, 2003 is vacated.

The terminal disclaimer submitted with the petition to revive is unnecessary and will not be processed. Also, petitioner should note that the filing of a terminal disclaimer is unnecessary as a condition for revival in applications filed on or after June 8, 1995. *Note* 37 CFR 1.137(d). Accordingly, the $110 fee submitted for the terminal disclaimer will be refunded to petitioner's deposit account.

Additionally, since the petition to revive is likewise unnecessary, the $1,300 fee submitted therefor is refundable. However, since there is no indication that the $130 surcharge fee was received, $130 of the $1,300 fee submitted for the instant petition will be applied towards the surcharge. The $1,170 balance will be credited to petitioner's deposit account.

The USPTO wishes to apologize for any inconvenience caused petitioner in this matter.

Telephone inquiries concerning this decision should be directed to Irvin Dingle at (703) 306-5684.

Frances Hicks

Frances Hicks
Petitions Examiner
Office of Petitions
Office of the Deputy Commissioner
for Patent Examination Policy

UNITED STATES PATENT AND TRADEMARK OFFICE

Commissioner for Patents
United States Patent and Trademark Office
P.O. Box 1450
Alexandria, VA 22313-1450
www.uspto.gov

WILLIAM L. PARADICE, III
4880 STEVENS CREEK BOULEVARD
SUITE 201
SAN JOSE CA 95129

COPY MAILED
DEC 09 2008

In re Application of	:	
Varadarajan Srinivasan, et al.	:	
Application No. 10/613,891	:	ON PETITION
Filed: July 2, 2003	:	
Attorney Docket No. NLMI.P194	:	

This is a decision on the petition under the unintentional provisions of 37 CFR 1.137(b), filed August 15, 2008, to revive the above-identified application.

The petition is **GRANTED**.

The application became abandoned for failure to timely file a reply within the meaning of 37 CFR 1.113 to the final Office action of January 24, 2008. The proposed reply required for consideration of a petition to revive must be a Notice of Appeal (and appeal fee required by 37 CFR 41.20(b)(2), an amendment that *prima facie* places the application in condition for allowance, a Request for Continued Examination and submission (37 CFR 1.114), or the filing of a continuing application under 37 CFR 1.53(b). See MPEP 711.03(c)(III)(A)(2). No extensions of time pursuant to the provisions of 37 CFR 1.136(a) were obtained. Accordingly, the date of abandonment of this application is April 25, 2008.

The petition satisfies the requirements of 37 CFR 1.137(b) in that petitioner has supplied (1) the reply in the form of a Request for Continued Examination (RCE) and fee of $810, and the submission required by 37 CFR 1.114; (2) the petition fee of $1,540; and (3) a proper statement of unintentional delay.

Telephone inquiries concerning this decision should be directed to Terri Williams at (571) 272-2991.

This application is being referred to Technology Center AU 2419 for processing of the RCE and for appropriate action by the Examiner in the normal course of business on the amendment submitted in accordance with 37 CFR 1.114.

Chris Bottorff
Petitions Examiner
Office of Petitions

UNITED STATES PATENT AND TRADEMARK OFFICE

UNITED STATES DEPARTMENT OF COMMERCE
United States Patent and Trademark Office
Address: COMMISSIONER FOR PATENTS
P.O. Box 1450
Alexandria, Virginia 22313-1450
www.uspto.gov

Mahamedi Paradice Kreisman LLP (NLMI)
550 South Winchester Blvd.
Suite 605
San Jose, CA 95128

Mail Date: 04/21/2010

Applicant	: Varadarajan Srinivasan	: DECISION ON REQUEST FOR
Patent Number	: 7616571	: RECALCULATION of PATENT
Issue Date	: 11/10/2009	: TERM ADJUSTMENT IN VIEW
Appliction No	: 10/613,891	: OF WYETH AND NOTICE OF INTENT TO
Filed	: 07/02/2003	: ISSUE CERTIFICATE OF CORRECTION
		:

The Request for Recalculation is **GRANTED** to the extent indicated.

The patent term adjustment has been determined to be **1329** days. The USPTO will *sua sponte* issue a certificate of correction reflecting the amount of PTA days determined by the recalculation.

Prior to the issuance of the certificate of correction, the USPTO will afford patentee an opportunity to be heard and request reconsideration. Accordingly, patentee has **one month or thirty (30) days**, whichever is longer, to file a request for reconsideration of this patent term adjustment calculation. See 35 U.S.C. 154(b)(3)(B)(ii) and 37 CFR 1.322(a)(4). No extensions of time will be granted under 37 CFR 1.136.

Patentee should use document code PET.OP if electronically filing a request for reconsideration of this patent term adjustment calculation. The patentee must also include the information required by 37 CFR 1.705(b)(2) and the fee required by 37 CFR 1.18(e). If patentee does not file a timely request for reconsideration of this patent term adjustment calculation including the information required by 37 CFR 1.705(b)(2) and the fee required by 37 CFR 1.18(e), the USPTO will issue a certificate of correction reflecting the PTA determination noted above.

Patentee should be aware that in order to preserve the right to review in the United States District Court for the District of Columbia of the USPTO patent term adjustment determination, patentee must ensure that he or she also take the steps required under 35 U.S.C. 154(b)(4)(A) in a timely manner. Nothing in the request for recalculation should be construed as providing an alternative time frame for commencing a civil action under 35 U.S.C. 154(b)(4)(A).

Any questions concerning this decision should be directed to the Office of Patent Legal Administration at 571-272-7702.

UNITED STATES PATENT AND TRADEMARK OFFICE

Commissioner for Patents
United States Patent and Trademark Office
P.O. Box 1450
Alexandria, VA 22313-1450
www.uspto.gov

KOLISCH HARTWELL, P.C.
520 S.W. YAMHILL STREET
SUITE 200
PORTLAND OR 97204

COPY MAILED

JAN 06 2005

OFFICE OF PETITIONS

In re Application of Motte et al. Application No.10/613,907 Filed: July 3, 2003 Attorney Docket No. IGR-306C Title of Invention: International Trading System and Method	:	DECISION ON PETITION

This is a decision on the petition under 37 CFR §1.137(b), filed November 24, 2004, to revive the above-identified application.

This above-identified application became abandoned for failure to file a response to a Notice to file Missing Parts of a Nonprovisional Application which was mailed on October 1, 2003. The Notice to File Missing Parts set an extendable two (2) month period for reply. No timely request for extensions of time were obtained under the provisions of 37 CFR §1.136(a). Accordingly, this application became abandoned on December 2, 2003. A Notice of Abandonment was mailed on November 23, 2004.

The requirements for a grantable petition under 37 CFR §1.137(b) have been met. This petition is hereby **Granted**.

The Office acknowledges receipt of the declaration.

This application is being forwarded to the Office of Initial Patent Examination for further processing of the application.

Telephone inquiries concerning this matter should be directed to the undersigned at (571) 272-3215.

Charlema R. Grant

Charlema R. Grant
Petitions Attorney
Office of Petitions

UNITED STATES PATENT AND TRADEMARK OFFICE

Commissioner for Patents
United States Patent and Trademark Office
P.O. Box 1450
Alexandria, VA 22313-1450
www.uspto.gov

EDWARD P. DUTKIEWICZ, ESQ.
EDWARD P. DUTKEIWICZ, P.A.
640 DOUGLAS AVENUE
DUNEDIN, FL 34698-7001

COPY MAILED

AUG 1 1 2005

OFFICE OF PETITIONS

In re Application of
Terepka
Application No. 10/613,910
Filed: July 3, 2003
Attorney Docket No. TD32/01

Decision on Petition

This is a decision in response to the paper filed May 20, 2005, which is being treated as a petition under 37 CFR 1.53(e)(2), to establish that page 2 of the specification was part of the originally filed application.

The petition is **dismissed**.

The application was filed on July 3, 2003.

On May 13, 2005, a Notice was mailed stating that page 2 of the specification did not appear to be included as part of the application filed.

The papers filed May 20, 2005, allege paper 2 was filed on July 3, 2003. However, evidence concerning page 2 will not be considered since a petition fee of $400 has not been paid. Prior to filing a request for reconsideration and the fee of $400, petitioner may wish to review the itemization requirements for postcards listed in MPEP 503.

Any request for reconsideration must be submitted within TWO (2) MONTHS from the mail date of this decision. Extensions of time under 37 CFR 1.136(a) are permitted. Any reconsideration request should include a cover letter entitled "Renewed Petition under 37 CFR 1.137(a)." This is **not** a final agency action within the meaning of 5 U.S.C. § 704.

Further correspondence with respect to this matter should be addressed as follows:

By mail: Mail Stop Petition
Commissioner for Patents
P.O. Box 1450
Alexandria, VA 22313-1450

By facsimile: (703) 872-9306
Attn: Office of Petitions

Unless a request for reconsideration is filed, the Office will process the application without page 2 of the specification and the examiner will consider for entry the new copy of the specification filed on May 20, 2005.

Telephone inquiries should be directed to Petitions Attorney Steven Brantley at (571) 272-3203.

Charles Steven Brantley
Petitions Attorney
Office of Petitions

UNITED STATES PATENT AND TRADEMARK OFFICE

COMMISSIONER FOR PATENTS
UNITED STATES PATENT AND TRADEMARK OFFICE
P.O. BOX 1450
ALEXANDRIA, VA 22313-1450
www.uspto.gov

WOLF GREENFIELD & SACKS, PC
FEDERAL RESERVE PLAZA
600 ATLANTIC AVENUE
BOSTON MA 02210-2211

COPY MAILED

AUG 0 8 2005

OFFICE OF PETITIONS

Applicant: Krieg et al.
Appl. No.: 10/613,916
Filing Date: July 3, 2003
Title: IMMUNOSTIMULATORY NUCLEIC ACID MOLECULES
Attorney Docket No.: C1039.70075US00
Pub. No.: US 2005/0070491 A1
Pub. Date: March 31, 2005

This is a decision on the request for corrected of patent application publication under 37 CFR 1.221(b), filed on May 6, 2005, for the above-identified application

The request is DISMISSED.

Applicant requests that the application be republished because the patent application publication contains a material error, as the second preliminary amendment filed on June 25, 2004 was not included in the patent application publication.

37 CFR 1.221(b) is applicable "only when the Office makes a material mistake which is apparent from Office records . . . Any request for a corrected publication or revised patent application publication other than provided as provided in paragraph (a) of this section must be filed within two months from the date of the patent application publication. This period is not extendable." A material mistake must affect the public's ability to appreciate the technical disclosure of the patent application publication, to determine the scope of the patent application publication, or to determine the scope of the provisional rights that an applicant may seek to enforce upon issuance of a patent.[1]

The patent application publication does not include a mistake in the publication by the Office because patent application publications are not required to include preliminary amendments, according to 37 CFR 1.215(a)[2], which says the following, in part:

---

[1] Changes to Implement Eighteen-Month Publication of Patent Applications, 65 FR 57023, 57038 (Sept. 20, 2000), 1239 Off. Gaz. Pat. Office Notices 63, 75 (Oct. 10, 2000) (final rule).

[2] Changes to Suport Implementation of the United States Patent and Trademark Office 2st Century Strategic Plan; Final Rule, 69 FR 56482 (Sept. 21, 2004).

> (a) ... The patent application publication will be based upon the specification and drawings deposited on the filing date of the application, as well as the executed oath or declaration submitted to complete the application. The patent application publication may also be based upon amendments to the specification (other than the abstract or the claims) that are reflected in a substitute specification under Sec. 1.125(b), amendments to the abstract under Sec. 1.121(b), amendments to the claims that are reflected in a complete claim listing under Sec. 1.121(c), and amendments to the drawings under Sec. 1.121(d), provided that such substitute specification or amendment is submitted in sufficient time to be entered into the Office file wrapper of the application before technical preparations for publication of the application have begun.

§ 1.215(c) says the following:

> (c) At applicant's option, the patent application publication will be based upon the copy of the application (specification, drawings, and oath or declaration) as amended, provided that applicant supplies such a copy in compliance with the Office electronic filing system requirements within one month of the mailing date of the first Office communication that includes a confirmation number for the application, or fourteen months of the earliest filing date for which a benefit is sought under title 35, United States Code, whichever is later.

While the patent application publication may now include a preliminary amendment, the Office is not required to use the preliminary amendment. The Office has recently changed the procedures for publication of patent applications so as to publish applications as amended, when possible. Until this past year, patent application publications were published as originally filed. See Patent Application Publications May Now Include Amendments, 1281 Off. Gaz. Pat. Office Notices 53 (April 13, 2004). The preliminary amendments filed July 3, 2003 and June 25, 2004 do not comply with 37 CFR 1.121. The applicant did not supply a copy of the application in compliance with 37 CFR 1.215(c). The Office correctly published the application in accordance with 37 CFR 1.215(a).

Applicant is reminded of his duty to conduct a reasonable inquiry before filing a paper before the Office. See MPEP 410.

Applicant's request for a corrected patent application publication on May 6, 2005, may constitute a "failure to engage in reasonable efforts to conclude processing or examination of the application." See 1.704(c). This determination will be made on or after a mailing of a Notice of Allowance.

The applicant is advised that a "request for republication of an application previously published" may be filed under 37 CFR 1.221(a). Such a request for republication "must include a copy of the application in compliance with the Office's electronic filing system requirements and be accompanied by the publication fee set forth in § 1.18(d) and the processing fee set forth in § 1.17(i)." If the request for republication does not comply with the electronic filing system requirements, the republication will not take place and the publication fee set forth in § 1.18(d) will be refunded. The processing fee will be retained.

Any request for republication under 37 CFR 1.221(a), must be submitted via the EFS system and questions or request for reconsideration of the decision, should be addressed as follows:

By mail to: Mail Stop PGPUB
Commissioner for Patents
P.O. Box 1450
Alexandria, Va. 22313-1450

By facsimile: 571-273-8300

Inquiries relating to this matter may be directed to Mark Polutta at (571) 272-7709.

Mark O. Polutta
Office of Patent Legal Administration
Office of the Deputy Commissioner
for Patent Examination Policy

UNITED STATES PATENT AND TRADEMARK OFFICE

Commissioner for Patents
United States Patent and Trademark Office
P.O. Box 1450
Alexandria, VA 22313-1450
www.uspto.gov

COPY MAILED

OCT 27 2006

OFFICE OF PETITIONS

C. BRANDON BROWNING
SIROTE & PERMUTT, P.C.
PO BOX 55727
BIRMINGHAM AL 35255-5727

In re Application of	:	
Frank Scozzari	:	
Application No. 10/613,920	:	ON PETITION
Filed: July 2, 2003	:	
Attorney Docket No. 051162-00001	:	

This is a decision on the petition under 37 CFR 1.137(b), filed July 10, 2006, to revive the above-identified application.

The petition is **DISMISSED**.

Any request for reconsideration of this decision must be submitted within TWO (2) MONTHS from the mail date of this decision. Extensions of time under 37 CFR 1.136(a) are permitted. The reconsideration request should include a cover letter entitled "Renewed Petition under 37 CFR 1.137(b)." This is **not** final agency action within the meaning of 5 U.S.C. § 704.

A grantable petition under 37 CFR 1.137(b)[1] must be accompanied by: (1) the required reply,[2] unless previously filed; (2) the petition fee as set forth in 37 CFR 1.17(m); (3) a statement that the entire delay in filing the required reply from the due date for the reply until the filing of a grantable petition pursuant to 37 CFR 1.137(b) was unintentional; and (4) any terminal disclaimer (and fee as set forth in 37 CFR 1.20(d)) required by 37 CFR 1.137(c). Where there is a question as to whether either the abandonment or the delay in filing a petition under 37 CFR 1.137 was unintentional, the Commissioner may require additional information. See MPEP 711.03(c)(III)(C) and (D). The instant petition lack(s) item(s) 1.

---

[1] As amended effective December 1, 1997. See Changes to Patent Practice and Procedure; Final Rule Notice, 62 Fed. Reg. 53131, 53194-95 (October 10, 1997), 1203 Off. Gaz. Pat. Office 63, 119-20 (October 21, 1997).

[2] In a nonprovisional application abandoned for failure to prosecute, the required reply may be met by the filing of a continuing application. In an application or patent, abandoned or lapsed for failure to pay the issue fee or any portion thereof, the required reply must be the payment of the issue fee or any outstanding balance thereof.

The fee for a Request for Continued Examination (RCE) was submitted on July 10, 2006. However, the RCE request itself was not submitted.

Further correspondence with respect to this matter should be addressed as follows:

By mail:	Mail Stop PETITIONS Commissioner for Patents Post Office Box 1450 Alexandria, VA 22313-1450
By hand:	Customer Window located at: Randolph Building 401 Dulany Street Alexandria, VA 22314
By fax:	(571) 273-8300 ATTN: Office of Petitions

Telephone inquiries concerning this decision should be directed to the undersigned at (571) 272-3208.

Karen Creasy

Karen Creasy
Petitions Examiner
Office of Petitions

UNITED STATES PATENT AND TRADEMARK OFFICE

Commissioner for Patents
United States Patent and Trademark Office
P.O. Box 1450
Alexandria, VA 22313-1450
www.uspto.gov

C. BRANDON BROWNING
SIROTE & PERMUTT, P.C.
PO BOX 55727
BIRMINGHAM AL 35255-5727

COPY MAILED

APR 0 2 2007

OFFICE OF PETITIONS

In re Application of	:	
Frank Scozzari	:	
Application No. 10/613,920	:	DECISION GRANTING PETITION
Filed: July 2, 2003	:	UNDER 37 CFR 1.137(b)
Attorney Docket No. 051162-00001	:	

This is a decision on the renewed petition under 37 CFR 1.137(b), filed November 28, 2006, to revive the above-identified application.

The petition is **GRANTED**.

The petition satisfies the conditions for revival pursuant to the provisions of 37 CFR 1.137(b) in that (1) the reply in the form of an RCE and a previously filed amendment; (2) the petition fee; and (3) the required statement of unintentional delay have been received. Accordingly, the reply to the Final Rejection of November 19, 2004, is accepted as having been unintentionally delayed.

Telephone inquiries concerning this decision should be directed to the undersigned at (571) 272-3208.

This matter is being referred to Technology Center AU 3617.

Karen Creasy

Karen Creasy
Petitions Examiner
Office of Petitions

UNITED STATES PATENT AND TRADEMARK OFFICE

COMMISSIONER FOR PATENTS
UNITED STATES PATENT AND TRADEMARK OFFICE
P.O. BOX 1450
ALEXANDRIA, VA 22313-1450
www.uspto.gov

JOHNS MANVILLE
LEGAL DEPARTMENT
10100 WEST UTE AVENUE
LITTLETON, CO 80127

COPY MAILED

JUL 0 6 2005

OFFICE OF PETITIONS

In re Application of
James P. Hamilton, et al.
Application No. 10/613,939
Filed: July 7, 2003
Attorney Docket No. 7127

ON PETITION

This is a decision on the petition under 37 CFR 1.313(c)(2), filed July 6, 2005 to withdraw the above-identified application from issue after payment of the issue fee.

It does not appear that the petition is signed by an attorney of record. However, in accordance with 37 CFR 1.34(a), the signature of Melissa M. Hayworth appearing on the correspondence shall constitute a representation to the United States Patent and Trademark Office that she is authorized to represent the particular party on whose behalf she acts. However, if Ms. Hayworth desires to receive correspondence regarding this file, the appropriate power of attorney documentation must be submitted. A courtesy copy of this decision is being mailed to Ms. Hayworth, the petitioner herein. However, until otherwise instructed, all future correspondence regarding this application file will be directed solely to the above-noted correspondence address of record.

The petition is **GRANTED**.

The above-identified application is withdrawn from issue for consideration of a submission under 37 CFR 1.114 (request for continued examination). See 37 CFR 1.313(c)(2).

Petitioner is advised that the issue fee paid on June 3, 2005 in the above-identified application cannot be refunded. If, however, the above-identified application is again allowed, petitioner may request that it be applied towards the issue fee required by the new Notice of Allowance. [1]

Telephone inquiries relating to this decision should be directed to the undersigned at (571) 272-3204.

[1] The request to apply the issue fee to the new Notice may be satisfied by completing and returning the new Issue Fee Transmittal Form PTOL-85(b), which includes the following language thereon: " Commissioner for Patents is requested to apply the Issue Fee and Publication Fee (if any) or re-apply any previously paid issue fee to the application identified above." Petitioner is advised that, whether a fee is indicated as being due or not, the Issue Fee Transmittal Form **must** be completed and timely submitted to avoid abandonment. Note the language in bold text on the first page of the Notice of Allowance and Fee(s) Due (PTOL-85).

The application is being referred to Technology Center AU 1755 for further processing of the request for continued examination under 37 CFR 1.114 filed July 6, 2005.

Sherry D. Brinkley
Petitions Examiner
Office of Petitions
Office of the Deputy Commissioner
for Patent Examination Policy

cc: MELISSA M. HAYWORTH
P. O. BOX 1404
ALEXANDRIA, VA 22313-1404

UNITED STATES PATENT AND TRADEMARK OFFICE

Commissioner for Patents
United States Patent and Trademark Office
P.O. Box 1450
Alexandria, VA 22313-1450
www.uspto.gov

Date : July 6, 2005

TO : Director, Office of Patent Publication

FROM : Office of the Deputy Commissioner for Patent Examination Policy

SUBJECT : Withdrawal from Issue of

Applicant(s) : James P. Hamilton, et al.
Application No. : 10/613,939
Filed : July 7, 2003

The above-identified application has been assigned Patent No. 6,919,285 and an issue date of July 19, 2005.

It is hereby directed that this application be withdrawn from issue at the request of the applicant.

Do not refund the issue fee.

The following erratum should be published in the Official Gazette if the above-identified application is published in the OG of July 19, 2005:

> "All reference to Patent No. 6,919,285 to JAMES P. HAMILTON, ET AL. of COLORADO for LOW BORON E-GLASS COMPOSITION appearing in the Official Gazette of July 19, 2005, should be deleted since no patent was granted."

Sherry D. Brinkley
Petitions Examiner
Office of Petitions
Office of the Deputy Commissioner
for Patent Examination Policy

cc: Paul Harrison, Crystal Park 3-44l (FAX-306-2737)
Deneise Boyd, Crystal Park 2, Suite 1100 (FAX-308-5413)
Mary Louise McAskill, Crystal Park 3-910 (FAX 305-4372)
Niomi Farmer, Crystal Park 3-9l0 (FAX-305-4372)
Mary E. Johnson (Cookie), P/OCS, CM1-6D07
Duane K.Davis, P/OCS, CM1-6A07
Tamara K. Greene, PK3-910

UNITED STATES PATENT AND TRADEMARK OFFICE

Commissioner for Patents
United States Patent and Trademark Office
P.O. Box 1450
Alexandria, VA 22313-1450
www.uspto.gov

Rebecca J. Brandau
Husch & Eppenberger, LLC
190 Carondelet Plaza
St Louis, MO 63105

COPY MAILED
JUL 1 9 2006
OFFICE OF PETITIONS

In re Application of	:	
Theodosios Korankianitis et al.	:	
Application No. 10/613,949	:	DECISION ON PETITION
Filed: July 3, 2003	:	TO WITHDRAW
Attorney Docket No. 716875.6	:	FROM RECORD
	:	

This is a decision on the Request to Withdraw as attorney or agent of record under 37 C.F.R. § 1.36(b), filed September 14, 2005.

The request is **NOT APPROVED**.

A grantable request to withdraw as attorney/agent of record must be signed by every attorney/agent seeking to withdraw or contain a clear indication that one attorney is signing on behalf of another/others. A request to withdraw will not be approved unless at least 30 (thirty) days would remain between the date of approval and the later of the expiration date of a time to file a response or the expiration date of the maximum time period which can be extended under 37 C.F.R. § 1.136(a).

The Office cannot approve the request at this time since the reasons provided do not meet any of the conditions under the mandatory or permissive categories enumerated in 37 CFR 10.40. Section 10.40 of Title 37 of the Code of Federal Regulation states, "[a] practitioner shall not withdraw from employment in a proceeding before the Office without permission from the Office[.]" More specifically, 37 CFR 10.40 states, "[i]f paragraph (b) of this section is not applicable, a practitioner may not request permission to withdraw in matter pending before the Office unless such request or such withdrawal is" for one the permissive reasons listed in 37 CFR 10.40(c). The reasons set forth in the request, privileged, does not meet any the conditions set forth in 37 CFR 10.40.

Please note that attorney docket number 75446-007 on request differs from that of record 716875.6.

All future communications from the Office will continue to be directed to the above-listed address until otherwise notified by applicant.

Telephone inquiries concerning this decision should be directed to Monica Graves at 571-272-7253.

David Bucci
Petitions Examiner
Office of Petitions

cc: Kay K. Wallace
Martin, Pringle, Oliver, Wallace & Bauer, LLP
100 North Broadway, Suite 500
Wichita, Kansas 67202-31

UNITED STATES PATENT AND TRADEMARK OFFICE

Commissioner for Patents
United States Patent and Trademark Office
P.O. Box 1450
Alexandria, VA 22313-1450
www.uspto.gov

HUSCH & EPPENBERGER, LLC
190 CARONDELET PLAZA, SUITE 600
ST. LOUIS MO 63105-3441

COPY MAILED

NOV 0 7 2006

OFFICE OF PETITIONS

In re Application of

KORAKIANITIS, et al.
Application No. 10/613,949
Filed: July 3, 2003
Attorney Docket No. 716875.6

DECISION ON PETITION
TO WITHDRAW
FROM RECORD

This is a decision on the renewed Request to Withdraw as attorney or agent of record under 37 C.F.R. § 1.36(b), filed July 24, 2006.

The request is **APPROVED**.

A grantable request to withdraw as attorney/agent of record must be signed by every attorney/agent seeking to withdraw or contain a clear indication that one attorney is signing on behalf of another/others. A request to withdraw will not be approved unless at least 30 (thirty) days would remain between the date of approval and the later of the expiration date of a time to file a response or the expiration date of the maximum time period which can be extended under 37 C.F.R. § 1.136(a).

The request was signed by Rebecca J. Brandau on behalf of all attorneys of record who are associated with customer No. 29493. All attorneys/agents associated with the Customer Number 29493 have been withdrawn. Applicant is reminded that there is no attorney of record at this time.

The request to change the correspondence of record is not acceptable as the requested correspondence address is not that of: (1) the first named signing inventor; or (2) an intervening assignee of the entire interest under 37 C.F.R 3.71. All future communications from the Office will be directed to the first named signing inventor at the first copied address below until otherwise properly notified by the applicant.

Telephone inquiries concerning this decision should be directed to the undersigned at 571-272-7253.

Monica A. Graves
Petitions Examiner
Office of Petitions

cc: **Theodosios Korankianitis**
27 Chesterfield Lake
St. Louis, MO 63005

cc: **Ms. Kay K. Wallace**
c/o Dwight D. Wallace, Esq.
Martin Pringle Oliver Wallace & Bauer LLP
100 North Broadway, Suite 500
Wichita, Kansas 67202-31

UNITED STATES PATENT AND TRADEMARK OFFICE

COMMISSIONER FOR PATENTS
UNITED STATES PATENT AND TRADEMARK OFFICE
P.O. BOX 1450
ALEXANDRIA, VA 22313-1450
www.uspto.gov

COPY MAILED

DEC 1 9 2003

OFFICE OF PETITIONS

FISH & RICHARDSON P.C.
45 ROCKEFELLER PLAZA, SUITE 2800
NEW YORK, NY 10111

In re Application of :
Guillaume et al. :
Application No. 10/613,952 : ON PETITION
Deposited: July 3, 2003 :
Attorney Docket No.: 08291-710002 :

This is a decision on the petition filed October 20, 2003 under 37 CFR 1.181 (a)(2), requesting that the above-identified application be accorded a filing date of July 3, 2003. This petition is being treated under 37 CFR 1.53.

The application was deposited on July 3, 2003, claiming status as a divisional of prior application No. 09/937,050. However, on October 7, 2003, the Office of Initial Patent Examination mailed a "Notice of Incomplete Nonprovisional Application" stating that a filing date had **not** been granted and requiring drawings as described in the specification. The "Notice" further stated that the filing date would be the date of receipt of the omitted drawings.

In response, 3 sheets of drawings, including figures No. 1-6, a copy of the first page of patent No. 6,516,363, application 09/937,050 and the present petition were filed on October 20, 2003. The Office has obtained a copy of applicants' transmittal letter which includes a statement incorporating the entire disclosure of the prior application into the disclosure of the present application.

In view of the incorporation by reference of the prior application, the drawings of figures 1-6 supplied on October 20, 2003, would not constitute new matter if they were part of the original disclosure of the prior application. Applicants state that application No. 09/937,050 contains the drawings referred to in the specification of the present application and that the drawings supplied with the petition are the drawings which were not received on July 3, 2003.

Based on applicants' representation that the drawings which are described in the specification are a part of the disclosure of application No. 09/937,050 and the entire disclosure of application No. 09/937,050 was specifically incorporated by reference in the present application on July 3, 2003, it appears that the drawings were present in the Office on July 3, 2003, albeit in the file of another application, i.e., application No.09/937,050. Therefore, on petition, the application may be accorded the requested filing date.

The petition is granted.

The petition fee will not be refunded, since the petition was not necessitated by any error on the part of the USPTO.

Of course, the primary examiner is expected to compare the drawings supplied on October 20, 2003, to the disclosure of prior application No. 09/937,050 in order to verify that the drawings are, in fact, part of the disclosure of the prior application.

A newly executed oath or declaration is not required under 37 CFR 1.51(b)(2) and 1.53(f) in a continuation or divisional application, provided that the specification and drawings filed in the continuation or divisional application contain no matter that would have been new matter in the prior application. See 37 CFR 1.63(d)(1). For initial processing purposes, it is presumed that the drawings filed October 20, 2003, contain no matter that would have been new matter in the prior application.

The application is being returned to the Office of Initial Patent Examination for further processing with a **filing date of July 3, 2003**, using the three (3) sheets of drawings supplied on October 3, 2003.

Telephone inquiries related to this decision may be directed to Petitions Attorney Charlema R. Grant at (703) 306-0251.

C. T. Donnell

Christina T. Donnell
Senior Petitions Attorney
Office of Petitions

UNITED STATES PATENT AND TRADEMARK OFFICE

COMMISSIONER FOR PATENTS
UNITED STATES PATENT AND TRADEMARK OFFICE
P.O. BOX 1450
ALEXANDRIA, VA 22313-1450
WWW.USPTO.GOV

Paper No. None

PATREA L. PABST
PABST PATENT GROUP LLP
400 COLONY SQUARE
SUITE 1200
ATLANTA GA 30361

COPY MAILED

APR 26 2006

OFFICE OF PETITIONS

In re Application of :
Donald L. Wise et al. :
Application No. 10/613,975 : DECISION ON PETITION
Filed: July 3, 2003 : UNDER 37 C.F.R. §1.137(b)
Attorney Docket Number: CSI 130 :
Title: VACCINES TO INDUCE :
MUCOSAL IMMUNITY :

This is a decision on the petition, pursuant to 37 C.F.R. §1.137(b)[1], to revive the above-identified application, filed on February 22, 2006.

The above-identified application became abandoned for failure to reply within the meaning of 37 CFR §1.113 in a timely manner to the final Office action mailed June 16, 2004, which set a shortened statutory period for reply of three (3) months. An after-final amendment was received on August 10, 2004, and an advisory action was mailed on November 3, 2004. No further

1 A grantable petition pursuant to 37 CFR 1.137(b) must be accompanied by:
(1) The reply required to the outstanding Office action or notice, unless previously filed;
(2) The petition fee as set forth in § 1.17(m);
(3) A statement that the entire delay in filing the required reply from the due date for the reply until the filing of a grantable petition pursuant to this paragraph was unintentional. The Commissioner may require additional information where there is a question whether the delay was unintentional, and;
(4) Any terminal disclaimer (and fee as set forth in § 1.20(d)) required pursuant to paragraph (d) of this section.

responses were received, and no extensions of time were requested. Accordingly, the above-identified application became abandoned on September 17, 2004. A notice of abandonment was mailed on February 16, 2005.

With the present petition, Petitioner has submitted a notice of appeal along with the associated fee, the petition fee, the proper statement of unintentional delay, and an appeal brief. A terminal disclaimer is not required.

The petition is **GRANTED**.

The Technology Center will be notified of this decision.

Telephone inquiries regarding this decision should be directed to the undersigned at (571) 272-3225. All other inquiries concerning examination procedures or status of the application should be directed to the Technology Center.

Paul Shanoski

Paul Shanoski
Senior Attorney
Office of Petitions
United States Patent and Trademark Office

UNITED STATES PATENT AND TRADEMARK OFFICE

Commissioner for Patents
United States Patent and Trademark Office
P.O. Box 1450
Alexandria, VA 22313-1450
www.uspto.gov

PARTEA L. PABST
PABST PATENT GROUP, LLP
400 COLONY SQUARE, SUITE 1200
1201 PEACHTREE STREET
ATLANTA, GA 30361

COPY MAILED

MAR 1 4 2008

OFFICE OF PETITIONS

In re Application of	:	
WISE, et al.	:	
Application No. 10/613,975	:	DECISION ON PETITION
Filed: July 3, 2003	:	TO WITHDRAW
Attorney Docket No. **22956-0822(MIT5083)**	:	FROM RECORD
	:	

This is a decision on the Request to Withdraw as attorney or agent of record under 37 C.F.R. § 1.36(b), filed August 30, 2007.

The request is **NOT APPROVED** as moot.

A review of the file record indicates that the power of attorney to **PABST PATENT GROUP, LLP** has been revoked by the assignee of the patent application on October 11, 2007. Accordingly, the request to withdraw under 37 C.F.R. § 1.36(b) is moot.

All future communications from the Office will continue to be directed to the below-listed address until otherwise notified by applicant.

Telephone inquires concerning this decision should be directed to the undersigned at 571-272-7253.

Monica A. Graves
Petitions Examiner
Office of Petitions

cc: **NUTTER MCCLENNEN & FISH LLP**
WORLD TRADE CENTER WEST
155 SEAPORT BOULEVARD
BOSTON MA 02210-2604

UNITED STATES PATENT AND TRADEMARK OFFICE

COMMISSIONER FOR PATENTS
UNITED STATES PATENT AND TRADEMARK OFFICE
P.O. BOX 1450
ALEXANDRIA, VA 22313-1450
www.uspto.gov

Paper No.

FOLEY & LARDNER LLP
150 EAST GILMAN STREET
P.O. BOX 1497
MADISON WI 53701-1497

COPY MAILED

AUG 17 2009

OFFICE OF PETITIONS

In re Patent No. 7,483,400	:	
Kuusinen et al.	:	DECISION DISMISSING
Application No. 10/613,986	:	REQUEST FOR
Issue Date: January 27, 2009	:	RECONSIDERATION OF
Filed: July 3, 2003	:	PATENT TERM ADJUSTMENT
Attorney Docket No.	:	UNDER 37 CFR 1.705
088245-0194	:	

This is in response to the REQUEST FOR RECONSIDERATION OF PATENT TERM ADJUSTMENT UNDER 37 C.F.R. §1.705, filed March 4, 2009. Patentee requests that the determination of patent term adjustment be corrected from one thousand fifty (1050) days to one thousand six hundred seven (1607) days.

The request for reconsideration of patent term adjustment is **DISMISSED** with respect to making any change in the patent term adjustment determination under 35 U.S.C. § 154(b) of 1050 days.

BACKGROUND

This application was filed on July 3, 2003. On September 19, 2008, the Office mailed a notice that the initial determination of patent term adjustment under 35 U.S.C. 154(b) to date is 1050 days[1]. On January 27, 2009, the application matured into U.S. Patent No. 7,483,400, with a revised patent term adjustment of 1050 days. The Office determined that the 939 days of Office delay pursuant to 35 U.S.C. 154(b)(1)(B) and 37 CFR 1.702(b)[2,3]

[1] 1050 days of Office delay was reduced by 0 days of applicant delay for a patent term adjustment of 1050 days. No request for reconsideration of this initial determination was filed.

[2] Pursuant to 35 U.S.C. 154(b)(1)(B), 37 CFR 1.702(b) provides, in pertinent part, that:

overlaps with the 1050 days of Office delay pursuant to 35 U.S.C. 154(b)(1)(A) and 37 CFR 1.702(a)(1) and (a)(2)[4,5] accorded prior to the issuance of the patent. As such, 0 additional days of patent term adjustment were entered at issuance under the three-year pendency provision. Given the applicant delay of 0 days, the patent issued with a revised patent term adjustment of 1050 (1050 - 0) days.

On March 4, 2009, patentee timely submitted this request for reconsideration of patent term adjustment (with required fee), asserting that the correct number of days of Patent Term

---

Failure to issue a patent within three years of the actual filing date of the application. Subject to the provisions of 35 U.S.C. 154(b) and this subpart, the term of an original patent shall be adjusted if the issuance of the patent was delayed due to the failure of the Office to issue a patent within three years after the date on which the application was filed under 35 U.S.C. 111(a) or the national stage commenced under 35 U.S.C. 371(b) or (f) in an international application, but not including:

(i) any time consumed by continued examination of the application requested by the applicant under section 132(b).

[3] As of the issuance of the patent on January 27, 2009, the application was pending three years and 939 days.

[4] 37 CFR § 1.702, provides grounds for adjustment of patent term due to examination delay under the Patent Term Guarantee Act of 1999 (original applications, other than designs, filed on or after May 29, 2000).

> (a) Failure to take certain actions within specified time frames. Subject to the provisions of 35 U.S.C. 154(b) and this subpart, the term of an original patent shall be adjusted if the issuance of the patent was delayed due to the failure of the Office to:
>
> (1) Mail at least one of a notification under 35 U.S.C. 132 or a notice of allowance under 35 U.S.C. 151 not later than fourteen months after the date on which the application was filed under 35 U.S.C. 111(a) or fulfilled the requirements of 35 U.S.C. 371 in an international application;
>
> (2) The number of days, if any, in the period beginning on the day after the date that is four months after the date a reply under § 1.111 was filed and ending on the date of mailing of either an action under 35 U.S.C. 132, or a notice of allowance under 35 U.S.C. 151, whichever occurs first;

[5] A first Office action was not mailed until July 17, 2007, fourteen months and 1047 days after the application filing date, July 3, 2003. A notice of allowance was not mailed until September 19, 2008, four (4) months and three (3) days after the filing of a reply on May 16, 2008 in response to an Office action.

Adjustment is 1607 days under the courts interpretation of the overlap provision as set forth in Wyeth v. Dudas, 580 F. Supp. 2d 138, 88 U.S.P.Q. 2d 1538 (D.D.C. 2008). Patentee asserts that pursuant to Wyeth, a PTO delay under §154(b)(1)(A) overlaps with a delay under §154(b)(1)(B) only if the delays "occur on the same day." Patentee maintains that the total non-overlapping PTO delay under §154(b)(1)(A) & (B) is 1607 (1050 + 939 - 382 overlap)[6] days as these periods do not occur on the same day. Further, given the applicant delay of 0 days, patentee asserts entitlement to 1607 (1607 - 0) days of patent term adjustment.

OPINION

Patentee's interpretation of the period of overlap has been considered, but found inconsistent with the Office's interpretation of the overlap provision, 35 U.S.C. 154(b)(2)(A). 35 U.S.C. 154(b)(2)(A) limits the adjustment of patent term, as follows:

> to the extent that the periods of delay attributable to grounds specified in paragraph (1) overlap, the period of any adjustment granted under this subsection shall not exceed the actual number of days the issuance of the patent was delayed.

As explained in *Explanation of 37 CFR 1.703(f)*[7] *and of the United States Patent and Trademark Office Interpretation of 35 U.S.C. 154(b)(2)(A)*, 69 Fed. Reg. 34283 (June 21, 2004), the Office interprets 35 U.S.C. 154(b)(2)(A) as permitting either patent

---

[6] Patentee asserts that the period of delay under 35 U.S.C. 154(a)(1)(A) and 37 CFR 1.702(a) overlaps by 382 days with the period under 35 U.S.C. 154(b)(1)(B) and 37 CFR 1.702(b). Specifically, the overlapping periods are (I) the period between the day after the date which is three years after the filing date of the application, July 3, 2006, and the date on which the first Office action was mailed, July 17, 2007, or 379 days; and (II) the day after the date which is four months after September 16, 2008, the day a reply was filed in response to a non-final Office action mailed on May 16, 2008, and September 19, 2008, the date on which a notice of allowance in response to that reply was filed, or 3 days.

[7] Likewise, 37 CFR 1.703(f) provides that:

> To the extent that periods of delay attributable to the grounds specified in §1.702 overlap, the period of adjustment granted under this section shall not exceed the actual number of days the issuance of the patent was delayed.

term adjustment under 35 U.S.C. 154(b)(1)(A)(i)-(iv), or patent term adjustment under 35 U.S.C. 154(b)(1)(B), but not as permitting patent term adjustment under both 35 U.S.C. 154(b)(1)(A)(i)-(iv) and 154(b)(1)(B). Accordingly, the Office implements the overlap provision as follows:

> If an application is entitled to an adjustment under 35 U.S.C. 154(b)(1)(B), the entire period during which the application was pending (except for periods excluded under 35 U.S.C. 154(b)(1)(B)(i)-(iii)), and not just the period beginning three years after the actual filing date of the application, is the period of delay under 35 U.S.C. 154(b)(1)(B) in determining whether periods of delay overlap under 35 U.S.C. 154(b)(2)(A). Thus, any days of delay for Office issuance of the patent more than 3 years after the filing date of the application, which overlap with the days of patent term adjustment accorded prior to the issuance of the patent will not result in any additional patent term adjustment. See 35 U.S.C. 154(b)(1)(B), 35 U.S.C. 154(b)(2)(A), and 37 CFR § 1.703(f). See *Changes to Implement Patent Term Adjustment Under Twenty Year Term; Final Rule*, 65 Fed. Reg. 54366 (Sept. 18, 2000). See also *Revision of Patent Term Extension and Patent Term Adjustment Provisions; Final Rule*, 69 Fed. Reg. 21704 (April 22, 2004), 1282 Off. Gaz. Pat. Office 100 (May 18, 2004). See also *Explanation of 37 CFR 1.703(f) and of the United States Patent and Trademark Office Interpretation of 35 U.S.C. 154(b)(2)(A)*, 69 Fed. Reg. 34283 (June 21, 2004).

Further, as stated in the *Explanation of 37 CFR 1.703(f) and of the United States Patent and Trademark Office Interpretation of 35 U.S.C. 154(b)(2)(A)*, the Office has consistently taken the position that if an application is entitled to an adjustment under the three-year pendency provision of 35 U.S.C. 154(b)(1)(B), the entire period during which the application was pending before the Office (except for periods excluded under 35 U.S.C. 154(b)(1)(B)(i)-(iii)), and not just the period beginning three years after the actual filing date of the application, is the relevant period under 35 U.S.C. 154(b)(1)(B) in determining whether periods of delay "overlap" under 35 U.S.C. 154(b)(2)(A).

This interpretation is consistent with the statute. Taken together the statute and rule provide that to the extent that periods of delay attributable to grounds specified in 35 U.S.C.

154(b)(1) and in corresponding §1.702 overlap, the period of adjustment granted shall not exceed the actual number of days the issuance of the patent was delayed.

In this instance, the relevant period under 35 U.S.C. 154(b)(1)(B) in determining whether periods of delay "overlap" under 35 U.S.C. 154(b)(2)(A) is the period during which the application was pending before the Office beginning on the application filing date under 35 U.S.C. 111(a), July 3, 2003, and ending on the date of issuance of the patent, January 27, 2009 (not including any other periods excluded under 35 U.S.C. 154(b)(1)(B)(i)-(iii)).

Pursuant to 35 U.S.C. 154(b)(1)(A) and 37 CFR 1.702(a), 1050 days of patent term adjustment were accorded during the pendency of the application for Office delay. Pursuant to 35 U.S.C. 154(b)(1)(B) and 37 CFR 1.702(b), 939 days of patent term adjustment accrued for Office issuance of the patent more than 3 years after the filing date of the application.

The 939 days of patent term adjustment under 37 CFR 1.702(b) overlap with the 1050 days of patent term adjustment under 37 CFR 1.702(a)(1). Entry of both the 939 days and the 1050 days is neither permitted nor warranted. 1050 days is the actual number of days issuance of the patent was delayed.

Accordingly, at issuance, the Office properly entered 0 additional days of adjustment pursuant to § 1.702(b) for a total of the greater period of 1050 days for Office delay.

CONCLUSION

In view thereof, the Office affirms that the revised determination of patent term adjustment at the time of the issuance of the patent is 1050 days (1050 days of Office delay - 0 days of applicant delay).

The Office acknowledges submission of the $200.00 fee set forth in 37 CFR 1.18(e). No additional fees are required.

Telephone inquiries specific to this matter should be directed to Senior Petitions Attorney Douglas I. Wood, at (571) 272-3231.

Olivia Brown for/

Nancy Johnson
Senior Petitions Attorney
Office of Petitions

UNITED STATES PATENT AND TRADEMARK OFFICE

Commissioner for Patents
United States Patent and Trademark Office
P.O. Box 1450
Alexandria, VA 22313-1450
www.uspto.gov

YOON S. HAM, ESQ.
PIPER RUDNICK LLP
P O BOX 9271
RESTON, VA 20195

COPY MAILED

NOV 1 8 2004

OFFICE OF PETITIONS

In re Patent No. 6,812,042 :
Issue Date: November 2, 2004 :DECISION ON PETITION
Application No. 10/613,993 :UNDER 37 CFR 1.313(c)(2)
Filed: July 8, 2003 :
Attorney Docket No. 312973-P0061 :

This is a decision on the petition under 37 CFR 1.313(c)(2), filed November 12, 2004, to withdraw the above-identified application from issue.

The petition is **DISMISSED as moot**.

The instant petition to withdraw from issue was filed after the issuance of the instant application into a patent. Accordingly, as this case matured into Patent No. 6,812,042 on November 2, 2004, the petition cannot be granted and is dismissed as involving a moot issue.

Since this application has issued, the concurrently filed request for continued examination (RCE) is improper and will not be processed. In view thereof, petitioner may request a refund of the $790 filing fee submitted.

Please send all requests for refunds to the following address or fax number listed below:

Mail Stop 16
Director of the US Patent and Trademark Office
PO Box 1450
Alexandria, VA 22313-1450

To check the status of your refund request, please contact the Refund Branch Customer Service Help Desk.

Refund Branch Point of Contact

Customer Service Help Desk
Phone: 703-305-4229
Fax: 703-308-5077

Refund requests should include at a minimum, the following information:

name, address, and phone number;
patent/application/registration/serial/order number;
refund amount due;
reason/explanation of why refund is due; and
any supporting documentation.

Any questions concerning this matter may be directed to the undersigned at (571) 272-3218.

Frances Hicks
Petitions Examiner
Office of Petitions
Office of the Deputy Commissioner
for Patent Examination Policy

UNITED STATES PATENT AND TRADEMARK OFFICE

Commissioner for Patents
United States Patent and Trademark Office
P.O. Box 1450
Alexandria, VA 22313-1450
www.uspto.gov

SEP 14 2004

In re Application of :
William H. Velke :
Application No. 10/614,004 : DECISION ON PETITION
Filed: July 8, 2003 :
For: Method and Device to Improve the Ratio Of Oxygen Mass Versus Fuel Mass During Ignition in Combustion Mechanisms Operating With Fluid Hydrocarbon Fuels

This is a decision on the petition to make special filed on June 9, 2004. The petition is based upon the practice described in MPEP § 708.02(VI) "Energy." Therefore, no petition fee is required.

The petition is granted.

The petition to make special based upon the practice in MPEP § 708.02(VI) is deemed to satisfy all of the requirements therefore. Accordingly, the examiner will treat this application as special throughout its prosecution. Prior to the next action on the merits, the examiner will conduct a rigorous search for potentially interfering applications. The interference search will be brought up to date prior to each successive action.

The Supervisory Patent Examiner of Patent Examining Art Unit 3749 is being informed of this decision, and will advise the examiner to take future action consistent therewith.

PETITION GRANTED.

Stephen Marcus, Special Program Examiner
Technology Center 3700

WILLIAM H. VELKE
277 CAMPBELLVILLE ROAD
P.O. BOX 154
CAMPBELLVILLE, ONTARIO
CANADA L0P 1B0

AIR MAIL

UNITED STATES PATENT AND TRADEMARK OFFICE

Commissioner for Patents
United States Patent and Trademark Office
P.O. Box 1450
Alexandria, VA 22313-1450
www.uspto.gov

YOUNG & THOMPSON
745 SOUND 23RD ST
2ND FLOOR
ARLINGTON VA 22202

COPY MAILED

JUL 19 2005

OFFICE OF PETITIONS

In re Application of	:	
Meyer, et al.	:	
Application No. 10/614,028	:	DECISION ON PETITION
Filed: July 8, 2003	:	
Attorney Docket No. 0514-1050-1	:	

This is a decision on the "PETITION TO ACCORD A FILING DATE UNDER 37 CFR 1.53(e)", filed June 22, 2005, to accord the above-identified application a filing date of July 8, 2003, with 6 sheets of drawings as part of the original disclosure.

The petition is **GRANTED**.

Application papers in the above-identified application were filed on July 8, 2003. However, on April 22, 2005, the Initial Patent Examination Division mailed applicants a "Notice of Incomplete NonProvisional Application." Applicants were notified that the application papers had not been accorded a filing date because the application was deposited without drawings.

In response, applicants filed the instant petition. Accompanying the petition was a copy of 6 drawing sheets. Applicants maintain that the application as originally filed included 6 pages of drawings. In support thereof, applicant submitted a postcard receipt identifying this application, itemizing "6 Sheets of Formal Drawings" as enclosed, bearing a United States Patent and Trademark Office date-stamp of July 8, 2003, and lacking any notation of non-receipt of any item listed.

A postcard receipt which itemizes and properly identifies the items which are being filed serves as *prima facie* evidence of receipt in the Office of all items listed thereon on the date stamped thereon by the Office. See MPEP 503.

Given the basis for granting the petition, the $400 petition fee has been refunded to Deposit Account No. 25-0120.

The application is being forwarded to the Office of Initial Patent Examination (OIPE) for further processing with a filing date of July 8, 2003, using the application papers received in the Office on that date and the 6 pages of drawings as resupplied on petition filed June 22, 2005, and for indication in Office records that 6 sheets of drawings were present on filing.

Telephone inquiries related to this decision should be directed to the undersigned at 571-272-3207.

Cliff Congo
Petitions Attorney
Office of Petitions

UNITED STATES PATENT AND TRADEMARK OFFICE

MAILED
FROM DIRECTOR'S OFFICE

JUN 15 2006

TECHNOLOGY CENTER 3600

Commissioner for Patents
United States Patent and Trademark Office
P.O. Box 1450
Alexandria, VA 22313-1450
www.uspto.gov

YOUNG & THOMPSON
745 South 23rd Street
2nd Floor
Arlington, VA 22202

In re Application of	:	
Clement Meyer, et al.	:	Petition for Supervisory Review
Application Number 10/614,028	:	under 37 C.F.R. §1.181
Filed: 07/08/2003	:	
For: PROCESS FOR AUTOMATIC	:	
REMOVAL OF PACKAGES	:	

This is a decision on the petition filed on February 16, 2006, under 37 C.F.R. §1.181 requesting supervisory review of the office actions mailed on October 3, 2005, and January 26, 2006.

The petition is DISMISSED.

Petitioner alleges that the non-final office action mailed on October 3, 2005, does not treat the correct claims of the application, and requests that a new office action be provided and the period for response restarted.

Background

1. The instant application was filed on July 8, 2003. As originally filed, the application included the specification (on pages 1-7) and claims 1-8 (on two pages numbered 8 and 9).
2. Filed concurrently was a preliminary amendment that included claims 8, 9, 10, and 13, all having the status identifier "amended", and claim 14, which was identified as "new".
3. Although both the remarks filed with the preliminary amendment, and the transmittal form filed with the application refer to 14 pending claims, no documents in the record include any claims numbered 11 or 12. Further, the text of the "amended" claim 8 found in the preliminary amendment does not match the text of the originally filed claim 8.
4. The application was subsequently converted from a paper application file to and electronic file, which became the official record of the application at the USPTO.

5. As part of the conversion process, USPTO technical support staff created a document entitled "CLMPTO". The CLMPTO document incorporates all the pending claims in an application into a single document in order to facilitate indexing and scanning into the electronic application file. The CLMPTO document for this file includes:

    a. claims 1-7 of the eight originally filed claims identified in item 1 above, and

    b. claims 8, 9, 10, 13, and 14 identified in item 2 above.

   Claims 13 and 14 were renumbered as claims 11 and 12 under 37 C.F.R. §1.126.
6. The examiner's office action mailed October 3, 2005, treats claims 1-12 as they appear in the CLMPTO document.
7. In response to a first request for a corrected office action, a letter holding the reply nonresponsive was mailed on January 26, 2006, setting an extendable one-month period for response.

Analysis

Petitioner states that he believes that the examiner has inadvertently examined the claims of the provisional application from which benefit is claimed. A review of the provisional application, application number 60/396,572, reveals that it contains 8 claims on pages 6 and 7, all in French. No copy of these claims is found in the instant application file. Thus, it is clear that the office action does not treat the claims of the provisional application, because the provisional application claims are neither in English, nor present in the application file.

Petitioner is correct that the examiner did examine claims 8, 9, 10, 13 (renumbered as claim 11), and 14 (renumbered as claim 12) of the preliminary amendment filed on July 8, 2003. As noted above, these amended claims were included in the CLMPTO document.

All of the documents referred to above can be viewed using the private or public PAIR system at the USPTO website, www.uspto.gov. Neither of the documents attached to the reply filed on November 23, 2005, which are identified as a listing of the claims as originally filed and as amended by an amendment filed on July 8, 2003, correspond to any of the sets of claims found in the official application file. Thus, the examiner correctly acted upon the claims that are actually of record in the official application file. A copy of the treated claims is attached for Petitioner's information. The Office is unable to provide a corrected office action treating different claims, because no other claims are present in the official application file.

Should Petitioner feel that the official application file of record in the Office is incorrect, a petition to accept late submission of copies of the documents in dispute

may be filed. Upon the granting of such a petition, the issuance of a corrected office action will be reconsidered.

Conclusion

The petition for supervisory review of the office action mailed on October 3, 2005, is DISMISSED.

The period for response set in the January 26, 2006, communication continues to run[1].

Telephone inquiries should be directed to Katherine Matecki at (571) 272-6951.

John J. Love
Director, Technology Center 3600
(571) 272-5250

Enclosed: Copy of claims acted on by the examiner

[1] **§ 1.181 Petition to the Director.**

.....

(f) The mere filing of a petition will not stay any period for reply that may be running against the application, nor act as a stay of other proceedings. Any petition under this part not filed within two months of the mailing date of the action or notice from which relief is requested may be dismissed as untimely, except as otherwise provided. This two-month period is not extendable.

CLMPTO 070803 AEC

Claims:

BEST AVAILABLE COPY

1. Process for the automatic removal of packages from a winding station of a yarn winding machine, comprising means (1) for holding and disengaging a full package (2), a package guide (3) guiding the yarn to be wound during winding, a bar (7) for disengagement from the winding guide (3), a package drive (4), heads (5) for gripping and holding a spool (6) and a device (7) for supplying the station with spools (6), characterized in that it consists essentially in providing, during each removal cycle, a relaxation of the tension of the supply yarn, then restarting a new winding cycle after completion of the removal.

2. Process according to claim 1, characterized in that the relaxation of the tension of the supply yarn is carried out during stopping of winding, namely during the phase of deceleration of the package or upon total stoppage of the package, or again after total stoppage of the package before disengagement of the full package or during this disengagement or just after the disengagement.

3. Process according to claim 2, characterized in that the relaxation of the tension of the supply yarn is carried out, by driving the package (1) in the reverse direction of its winding rotation, by means of the package drive (4), which is actuated in the opposite direction, for a short period of time, by means of a mechanical, electrical, electronic or like reverser.

BEST AVAILABLE COPY

4. Process according to claim 2, characterised in that the relaxation of the tension of the supply yarn is carried out after total stopping of the package, during disengagement of the full package (2) by the relaxation of the tension of the supply yarn upstream of the winding station.

5. Process according to claim 2, characterised in that the relaxation of the tension of the supply yarn is carried out by action on the path of the yarn upstream of the winding guide (3), the assembly of the drive motors for winding, the winding guide and the pre-supply being stopped.

6. Process according to claim 5, characterised in that obtaining the relaxation is carried out by a relative displacement of the different deflection cylinders forming the pre-supply in the direction of shortening the path of the yarn during stopping.

7. Process according to claim 5, characterized in that obtaining the relaxation is carried out by action on the length of the path of the yarn by provision of one or several deflection cylinders along said path, these deflection cylinders being movable outside a rectilinear path.

BEST AVAILABLE COPY

8. (amended) Process according to claim 3, characterized in that the relaxation of the tension of the supply yarn is carried out upstream of the winding station.

9. (amended) Process according to claim 3, characterized in that the relaxation of the tension of the supply yarn is effected, by driving the package (2) in the reverse direction of its winding rotation, by means of the package drive (4), which is actuated in the opposite direction, for a short period of time, by means of a mechanical, electrical, electronic or like reverser.

10. (amended) Process according to claim 2, characterized in that the relaxation of the tension of the supply yarn is carried out effected by action on the path of the yarn upstream of the winding guide (3), the assembly of the drive motors for winding, for the winding guide and for the pre-supply being stopped.

Rule 1.26 11 ~~12~~ (amended) Process according to claim 9, characterized in that the different controls for reversing the operation of the package drive (4) or the movement of the different deflection cylinders is carried out automatically.

--~~11~~ 12. (new). Process according to claim 12, characterized in that the different controls for reversing the operation of the package drive (4) or the movement of the different deflection cylinders is carried out automatically.--

BEST AVAILABLE COPY

UNITED STATES PATENT AND TRADEMARK OFFICE

Commissioner for Patents
United States Patent and Trademark Office
P.O. Box 1450
Alexandria, VA 22313-1450
www.uspto.gov

MAR - 6 2006

032006

BIRCH, STEWART, KOLASCH & BIRCH
P.O. BOX 747
FALLS CHURCH, VA 22040-0747

In re Application of:
Sadanori Yamanaka et al.
Serial No.: 10/614,062
Filed: July 8, 2003
Attorney Docket No.: 3885-0107P

DECISION *SUA SPONTE*
WITHDRAWING HOLDING
OF ABANDONMENT

This is a decision, *sua sponte*, withdrawing the holding of abandonment of the above-identified application.

A Notice of Appeal was filed on August 11, 2005. An Appeal Brief was due within two months of the date of the Notice of Appeal and extensions of this time period were governed by 37 C.F.R. § 1.136(a). Before the maximum extendable time for filing the Appeal Brief expired, the application was erroneously held abandoned and a Notice of Abandonment was mailed on February 21, 2006.

Although no petition or request to withdraw the holding of abandonment in this application has been filed, the Notice of Abandonment is hereby vacated and the holding of abandonment is withdrawn in view of the fact that a Request for Continued Prosecution (RCE) along with a submission under 37 C.F.R. § 1.114(c) and a petition for an extension of time of four months were timely filed on February 21, 2006. The application is not abandoned in fact.

The RCE will be processed and an Office action will be prepared by the examiner in due course.

Any inquiry regarding this decision should be directed to Hien H. Phan, Special Program Examiner, at (703) 308-7502.

Robert Oberleitner, Group Director
Technology Center 2800
Semiconductors, Electrical and Optical
Systems and Components

UNITED STATES PATENT AND TRADEMARK OFFICE

Commissioner for Patents
United States Patent and Trademark Office
P.O. Box 1450
Alexandria, VA 22313-1450
www.uspto.gov

JAMES G. STAPLES
586 INGLESIDE PARK
EVANSTON IL 60201

COPY MAILED

SEP 2 4 2009

OFFICE OF PETITIONS

ON PETITION

In re Application of
Ronald R. Bartman et al.
Application No. 10/614,074
Filed: July 7, 2003
Attorney Docket No. 1005-U.S.

This is a decision on the petition filed September 8, 2009 under 37 CFR 1.137(b),[1] to revive the above-identified application.

The petition is **GRANTED**.

In response to a non-Final Office Action mailed June 30, 2008 an amendment was filed on September 8, 2008. However, in response thereof, a Notice of Non-Compliant Amendment (37 CFR 1.121) was mailed December 10, 2008 which set a one month period for reply. No reply or extensions of time having been requested, this application became abandoned January 12, 2009. Accordingly, a Notice of Abandonment was mailed June 23, 2009.

All other requirements having been met , this matter is being referred to Technology Center 3635 for appropriate action on the amendment filed September 8, 2009.

Telephone inquiries concerning this matter should be directed to the undersigned Petitions Attorney at (571) 272-3212.

Patricia Faison-Ball
Senior Petitions Attorney
Office of Petitions

---

[1] Effective December 1, 1997, the provisions of 37 CFR 1.137(b) now provide that where the delay in reply was unintentional, a petition may be filed to revive an abandoned application or a lapsed patent pursuant to 37 CFR 1.137(b). A grantable petition filed under the provisions of 37 CFR 1.137(b) must be accompanied by:

(1) the required reply, unless previously filed. In a nonprovisional application abandoned for failure to prosecute, the required reply may be met by the filing of a continuing application. In a nonprovisional application filed on or after June 8, 1995, and abandoned for failure to prosecute, the required reply may also be met by the filing of a request for continued examination in compliance with § 1.114. In an application or patent, abandoned or lapsed for failure to pay the issue fee or any portion thereof, the required reply must be the payment of the issue fee or any outstanding balance thereof. In an application abandoned for failure to pay the publication fee, the required reply must include payment of the publication fee.

(2) the petition fee as set forth in 37 CFR 1.17(m);

(3) a statement that the entire delay in filing the required reply from the due date for the reply until the filing of a grantable petition pursuant to 37 CFR 1.137(b) was unintentional. The Commissioner may required additional information where there is a question whether the delay was unintentional; and

(4) any terminal disclaimer (and fee as set forth in 37 CFR 1.20(d)) required pursuant to 37 CFR 1.137(c)).

UNITED STATES PATENT AND TRADEMARK OFFICE

Commissioner for Patents
United States Patent and Trademark Office
P.O. Box 1450
Alexandria, VA 22313-1450
www.uspto.gov

Finnegan, Henderson, Farabow,
Garrett & Dunner, L.L.P.
1300 I Street, N.W.
Washington DC 20005-3315

PROCESSED BY
PG PUB DIVISION

JAN 3 1 2005

Applicant: Pascale Lazzeri et al.
Appl. No.: 10/614,092
Filing Date: July 8, 2003
Title: DETERGENT COSMETIC COMPOSITIONS COMPRISING AN ANIONIC SURFACTANT, AN AMPHOTERIC, CATIONIC, AND/OR NONIONIC SURFACTANT, AND A POLYSACCHARIDE, AND USE THEREOF
Attorney Docket No.: 05725.1209-00
Pub. No.: US 2004/0077510 A1
Pub. Date: April 22, 2004

This is a decision on the request for corrected of patent application publication under 37 CFR 1.221(b), filed on June 22, 2004 for the above-identified application.

The request is granted.

Inquiries relating to this matter may be directed to Mark Polutta at (571) 272-7709 (voice)

Shelly Littman, For

Mark O. Polutta
Office of Patent Legal Administration
Office of the Deputy Commissioner
for Patent Examination Policy

SPE: D. Mc Ginty

SPE RESPONSE FOR CERTIFICATE OF CORRECTION

Paper No.: 20070312

DATE : 3/3/07

TO SPE OF : ART UNIT 1751

SUBJECT : Request for Certificate of Correction for Appl. No.: 10/614092 Patent No.: 7157413

Please respond to this request for a certificate of correction within 7 days.

Please review the requested changes/corrections as shown in the **COCIN** document(s) in the IFW application image. No new matter should be introduced, nor should the scope or meaning of the claims be changed.

Please complete the response (see below) and forward the completed response to scanning using document code **COCX**.

Lamonte M. Newsome
Certificates of Correction Branch
703-308-9390 ext. 112

Thank You For Your Assistance

The request for issuing the above-identified correction(s) is hereby:
Note your decision on the appropriate box.

- ☒ **Approved** — **All** changes apply.
- ☐ **Approved in Part** — Specify below which changes **do not** apply.
- ☐ **Denied** — State the reasons for denial below.

Comments: _____

DOUGLAS MCGINTY
SUPERVISORY PATENT EXAMINER

Douglas J. McGinty — SPE

1751 — Art Unit

UNITED STATES PATENT AND TRADEMARK OFFICE

UNITED STATES DEPARTMENT OF COMMERCE
United States Patent and Trademark Office
Address: COMMISSIONER FOR PATENTS
P.O. Box 1450
Alexandria, Virginia 22313-1450
www.uspto.gov

Morgan, Lewis & Bockius LLP/Google
2 Palo Alto Square
3000 El Camino Real, Suite 700
Palo Alto, CA 94306

Mail Date: 04/20/2010

Applicant	: Daniel Dulitz	: DECISION ON REQUEST FOR
Patent Number	: 7627613	: RECALCULATION of PATENT
Issue Date	: 12/01/2009	: TERM ADJUSTMENT IN VIEW
Appliction No	: 10/614,111	: OF WYETH AND NOTICE OF INTENT TO
Filed	: 07/03/2003	: ISSUE CERTIFICATE OF CORRECTION
		:

The Request for Recalculation is **GRANTED** to the extent indicated.

The patent term adjustment has been determined to be **587** days. The USPTO will *sua sponte* issue a certificate of correction reflecting the amount of PTA days determined by the recalculation.

Prior to the issuance of the certificate of correction, the USPTO will afford patentee an opportunity to be heard and request reconsideration. Accordingly, patentee has **one month or thirty (30) days**, whichever is longer, to file a request for reconsideration of this patent term adjustment calculation. See 35 U.S.C. 154(b)(3)(B)(ii) and 37 CFR 1.322(a)(4). No extensions of time will be granted under 37 CFR 1.136.

Patentee should use document code PET.OP if electronically filing a request for reconsideration of this patent term adjustment calculation. The patentee must also include the information required by 37 CFR 1.705(b)(2) and the fee required by 37 CFR 1.18(e). If patentee does not file a timely request for reconsideration of this patent term adjustment calculation including the information required by 37 CFR 1.705(b)(2) and the fee required by 37 CFR 1.18(e), the USPTO will issue a certificate of correction reflecting the PTA determination noted above.

Patentee should be aware that in order to preserve the right to review in the United States District Court for the District of Columbia of the USPTO patent term adjustment determination, patentee must ensure that he or she also take the steps required under 35 U.S.C. 154(b)(4)(A) in a timely manner. Nothing in the request for recalculation should be construed as providing an alternative time frame for commencing a civil action under 35 U.S.C. 154(b)(4)(A).

Any questions concerning this decision should be directed to the Office of Patent Legal Administration at 571-272-7702.

SPE RESPONSE FOR CERTIFICATE OF CORRECTION

Paper No.: _____

DATE : **7-7-10**

TO SPE OF : ART UNIT **2613**

SUBJECT : Request for Certificate of Correction for Appl. No.: **10614112** Patent No.: **7359643**

Please respond to this request for a certificate of correction within 7 days.

FOR IFW FILES:

Please review the requested changes/corrections as shown in the **COCIN** document(s) in the IFW application image. No new matter should be introduced, nor should the scope or meaning of the claims be changed.

Please complete the response (see below) and forward the completed response to scanning using document code **COCX**.

FOR PAPER FILES:

Please review the requested changes/corrections as shown in the attached certificate of correction. Please complete this form (see below) and forward it with the file to:

Certificates of Correction Branch (C of C)
Randolph Square – 9D10-E
Palm Location 7580

Omega Lewis
Certificates of Correction Branch

703-756-1575

Thank You For Your Assistance

The request for issuing the above-identified correction(s) is hereby:
Note your decision on the appropriate box.

XApproved	**All** changes apply.
☐ **Approved in Part**	Specify below which changes **do not** apply.
☐ **Denied**	State the reasons for denial below.

Comments: _____

_____

_____

/Kenneth Vanderpuye/ **SPE**
Art Unit 2613

UNITED STATES PATENT AND TRADEMARK OFFICE

Commissioner for Patents
United States Patent and Trademark Office
P.O. Box 1450
Alexandria, VA 22313-1450
www.uspto.gov

OLIFF & BERRIDGE PLC
PO BOX 19928
ALEXANDRIA VA 22320

COPY MAILED

MAR 03 2005

OFFICE OF PETITIONS

In re Application of	:	
Aronson, et al.	:	
Application No. 10/614,125	:	DECISION ON PETITION
Filed: July 8, 2003	:	
Attorney Docket No. 116439	:	

This is a decision on the "PETITION FOR FILING DATE UNDER 37 C.F.R. §1.53(b)", filed December 9, 2004, which is being treated as a petition to accord the above-identified application a filing date of July 8, 2003.

The petition is **GRANTED**.

Application papers in the above-identified application were filed on July 8, 2003. On January 20, 2004, applicants filed an English language translation of the specification, together with the $130 surcharge for a non-English specification. At that time the application was erroneously accorded a filing date of January 20, 2004.

A review of the application file reveals that the application was entitled to a filing date (i.e. contained a specification, claims, and drawings) on July 8, 2003.

Given the basis for granting the petition, no petition fee was required, and none has been charged.

The application is being forwarded to the Office of Initial Patent Examination (OIPE) for further processing with a filing date of July 8, 2003, using the application papers received in the Office on that date, and for issuance of a new filing receipt. Thereafter the application will be forwarded to Group Art Unit 2851 for examination in due course.

Telephone inquiries related to this decision should be directed to Petitions Attorney Cliff Congo at 571-272-3207.

Charles Pearson
Director
Office of Petitions

UNITED STATES PATENT AND TRADEMARK OFFICE

COMMISSIONER FOR PATENTS
UNITED STATES PATENT AND TRADEMARK OFFICE
P.O. BOX 1450
ALEXANDRIA, VA 22313-1450
www.uspto.gov

SACCO & ASSOCIATES, PA
P.O. BOX 30999
PALM BEACH GARDENS, FL 33420-0999

COPY MAILED

APR 26 2005

OFFICE OF PETITIONS

ON PETITION

In re Application of :
Stephen B. Brown, et al. :
Application No. 10/614,149 :
Filed: July 7, 2003 :
Attorney Docket No. 7162-74 :

This is a decision on the petition, filed April 21, 2005, under 37 CFR 1.313(c)(2) to withdraw the above-identified application from issue after payment of the issue fee.

The petition is **GRANTED**.

The above-identified application is withdrawn from issue for consideration of a submission under 37 CFR 1.114 (request for continued examination). See 37 CFR 1.313(c)(2).

Petitioner is advised that the issue fee paid on April 8, 2005, in the above-identified application cannot be refunded. If, however, the above-identified application is again allowed, petitioner may request that it be applied towards the issue fee required by the new Notice of Allowance. [1]

Telephone inquiries relating to this decision should be directed to the undersigned at (571) 272-3204.

The application is being referred to Technology Center AU 2817 for further processing of the request for continued examination under 37 CFR 1.114.

Sherry D. Brinkley
Petitions Examiner
Office of Petitions
Office of the Deputy Commissioner
for Patent Examination Policy

[1] The request to apply the issue fee to the new Notice may be satisfied by completing and returning the new Issue Fee Transmittal Form PTOL-85(b), which includes the following language thereon: "Commissioner for Patents is requested to apply the Issue Fee and Publication Fee (if any) or re-apply any previously paid issue fee to the application identified above." Petitioner is advised that, whether a fee is indicated as being due or not, the Issue Fee Transmittal Form **must** be completed and timely submitted to avoid abandonment. Note the language in bold text on the first page of the Notice of Allowance and Fee(s) Due (PTOL-85).

UNITED STATES PATENT AND TRADEMARK OFFICE

Commissioner for Patents
United States Patent and Trademark Office
P.O. Box 1450
Alexandria, VA 22313-1450
www.uspto.gov

ANDREWS KURTH LLP
1350 I STREET, N.W.
SUITE 1100
WASHINGTON, DC 20005

COPY MAILED

APR 16 2008

OFFICE OF PETITIONS

In re Application of
Chung-Yih Wang et al
Application No. 10/614,151
Filed: July 8, 2003
Attorney Docket No. 33080/US/2

ON PETITION

This is a decision on the petition under 37 CFR 1.137(b), filed November 19, 2007, to revive the above-identified application.

The petition is **GRANTED**.

The above-identified application became abandoned for failure to reply in a timely manner to the non-final Office action mailed May 16, 2007, which set a shortened statutory period for reply of three (3) months. No extension of time under the provisions of 37 CFR 1.136(a) were obtained. Accordingly, the above-identified application became abandoned on August 17, 2007.

An extension of time under 37 CFR 1.136 must be filed prior to the expiration of the maximum extendable period for reply. See In re Application of S., 8 USPQ2d 1630, 1631 (Comm'r Pats. 1988). Accordingly, since the $1050 extension of time submitted with the petition on November 19, 2007 was subsequent to the maximum extendable period for reply, this fee is unnecessary and will be credit to petitioner's deposit account.

Telephone inquiries concerning this decision should be directed to Irvin Dingle at (571) 272-3210.

This matter is being referred to Technology Center AU 2146 for further processing.

Irvin Dingle
Petitions Examiner
Office of Petitions

SPE RESPONSE FOR CERTIFICATE OF CORRECTION

Paper No.: _____

DATE : 2/16/60

TO SPE OF : ART UNIT 2827

SUBJECT : Request for Certificate of Correction on Patent No.: 6961277

A response is requested with respect to the accompanying request for a certificate of correction.

Please complete this form and return with file, within **7** days to:
Palm location **7580, Certificates of Correction Branch – South Tower – 9A22**
If response is for an IFW, **return to employee (named below) via PUBSCofC Team in MADRAS.**
With respect to the change(s) requested, correcting Office and/or Applicant's errors, should the patent read as shown in the certificate of correction (COCIN)? No new matter should be introduced, nor should the scope or meaning of the claims be changed.

Valerie Jackson

Thank You For Your Assistance

Certificates of Correction Branch
Tel. No. 703-308-9390 ext. 114

The request for issuing the above-identified correction(s) is hereby:
Note your decision on the appropriate box.

- ☒ **Approved** — All changes apply.
- ☐ **Approved in Part** — Specify below which changes do not apply.
- ☐ **Denied** — State the reasons for denial below.

Comments:

OK TO enter V.N 2/23/06

VIET Q. NGUYEN
PRIMARY EXAMINER

SPE 2822

2827
Art Unit

OIPE IAP13
JAN 17 2006
PATENT & TRADEMARK OFFICE

Docket No.: M4065.0715/P715
(PATENT)

IN THE UNITED STATES PATENT AND TRADEMARK OFFICE

In re Letters Patent of:
John T. Moore et al.

Patent No.: 6,961,277

Issued: November 1, 2005

For: METHOD OF REFRESHING A PCRAM MEMORY DEVICE

REQUEST FOR CERTIFICATE OF CORRECTION
PURSUANT TO 37 C.F.R. §§ 1.322 & 1.323

Attention: Certificate of Correction Branch
Commissioner for Patents
P.O. Box 1450
Alexandria, VA 22313-1450

OK to enter
VN
2/23/06

Dear Sir:

Upon reviewing the above-identified patent, Patentee noted omissions and typographical errors which should be corrected.

In the **U.S. Patent Documents** portion of the References Cited section, the USPTO omitted the listing of forty-nine patents. Exhibit A, attached, shows the IDS forms as considered and signed by the Examiner. The patents that should be added are as follows:

01/19/2006 MBEYENE1 00000039 6961277
01 FC:1811 100.00 OP

3,622,319	11/1971	Sharp
3,743,847	7/1973	Boland
4,269,935	5/1981	Masters et al.

FEB 1 2006

PTO/SB/44 (04-05)
Approved for use through 04/30/2007. OMB 0651-0033
U.S. Patent and Trademark Office: U.S. DEPARTMENT OF COMMERCE
Under the Paperwork Reduction Act of 1995, no persons are required to respond to a collection of information unless it displays a valid OMB control number.
(Also Form PTO-1050)

UNITED STATES PATENT AND TRADEMARK OFFICE
CERTIFICATE OF CORRECTION

PATENT NO. : 6,961,277

APPLICATION NO. : 10/614,160

ISSUE DATE : November 1, 2005

INVENTORS : John T. Moore et al.

It is certified that errors appear in the above-identified patent and that said Letters Patent is hereby corrected as shown below:

In the **U.S. Patent Documents** portion of the References Cited section, forty-nine patents. should be added as follows:

3,622,319	11/1971	Sharp
3,743,847	7/1973	Boland
4,269,935	5/1981	Masters et al.
4,312,938	1/1982	Drexler, et al.
4,316,946	1/1982	Masters, et al.
4,320,191	3/1982	Yoshikawa et al.
4,405,710	9/1983	Balasubramanyam et al.
4,419,421	12/1983	Wichelhaus, et al.
4,499,557	2/1985	Holmberg et al.
4,671,618	06/09/1987	Wu et al.
4,795,657	1/1989	Formigoni et al.
4,800,526	01/24/1989	Lewis

OK TO enter VN 2/23/06

MAILING ADDRESS OF SENDER (Please do not use customer number below):
Thomas J. D'Amico
DICKSTEIN SHAPIRO MORIN & OSHINSKY LLP 1
2101 L Street NW
Washington, DC 20037-1526

FEB 1 2006

UNITED STATES PATENT AND TRADEMARK OFFICE

COMMISSIONER FOR PATENTS
UNITED STATES PATENT AND TRADEMARK OFFICE
P.O. BOX 1450
ALEXANDRIA, VA 22313-1450
www.uspto.gov

Michael J. Malone
1907 Juniper Lane
Bensalem, PA 19020

MAILED

APR 1 5 2005

Technology Center 2100

In re Application of MALONE
Application No.: 10/614,161
Filing Date: July 8, 2003
For: SERIAL HARD DISK DRIVE SELECTOR

DECISION ON PETITION FOR ACCELERATED EXAMINATION UNDER M.P.E.P. §708.02(VIII)

This is a decision on the petition filed July 8, 2003 under 37 CFR §1.102(d) and M.P.E.P. §708.02(VIII): Accelerated Examination, to make the above-identified application special.

M.P.E.P. §708.02, Section VIII, which sets out the prerequisites for a grantable petition for Accelerated Examination under 37 CFR §1.102(d), states in relevant part:

> A new application (one which has not received any examination by the examiner) may be granted special status provided that applicant (and this term includes applicant's attorney or agent) complies with each of the following items:
>
> (A) Submits a petition to make special accompanied by the fee set forth in 37 CFR 1.17(h);
>
> (B) Presents all claims directed to a single invention, or if the Office determines that all the claims presented are not obviously directed to a single invention, will make an election without traverse as a prerequisite to the grant of special status. The election may be made by applicant at the time of filing the petition for special status. Should applicant fail to include an election with the original papers or petition and the Office determines that a requirement should be made, the established telephone restriction practice will be followed. If otherwise proper, examination on the merits will proceed on claims drawn to the elected invention. If applicant refuses to make an election without traverse, the application will not be further examined at that time. The petition will be denied on the ground that the claims are not directed to a single invention, and the application will await action in its regular turn. Divisional applications directed to the nonelected inventions will not automatically be given special status based on papers filed with the petition in the parent application. Each such application must meet on its own all requirements for the new special status;
>
> (C) Submits a statement(s) that a pre-examination search was made, listing the field of search by class and subclass, publication, Chemical Abstracts, foreign patents, etc. >The pre-examination search must be directed to the invention as claimed in the application for which special status is requested.< A search made by a foreign patent office satisfies this requirement >if the claims in

the corresponding foreign application are of the same or similar scope to the claims in the U.S. application for which special status is requested<;

(D) Submits one copy each of the references deemed most closely related to the subject matter encompassed by the claims if said references are not already of record; and

(E) Submits a detailed discussion of the references, which discussion points out, with the particularity required by 37 CFR 1.111 (b) and (c), how the claimed subject matter is patentable over the references.

Because the petition filed July 8, 2003 meets the criteria set forth above, the petition to make special is **GRANTED**.

Applicant should consider filing an Information Disclosure Statement (Form PTO-1449 or PTO-SB08A) to ensure that the references cited in the petition will be considered by the assigned examiner.

The application file is being forwarded to the Examiner for accelerated examination in accordance with M.P.E.P. §708.02, Section VIII. If the application is subsequently allowed, it will be given priority for printing. See M.P.E.P. §1309.

Pinchus M. Laufer
Special Programs Examiner
Technology Center 2100
Computer Architecture, Software, and Information Security
571-272-3599

UNITED STATES PATENT AND TRADEMARK OFFICE

COMMISSIONER FOR PATENTS
UNITED STATES PATENT AND TRADEMARK OFFICE
P.O. BOX 1450
ALEXANDRIA, VA 22313-1450
www.uspto.gov

MATTINGLY, STANGER, MALUR & BRUNDIDGE, P.C.
1800 DIAGONAL ROAD
SUITE 370
ALEXANDRIA, VA 22314

MAILED

JAN 10 2006

Technology Center 2100

In re Application of TAKAMOTO et al	:	
Application No.: 10/614,190	:	DECISION ON PETITION
Filing Date: July 8, 2003	:	FOR ACCELERATED
For: NETWORK STORAGE SYSTEM	:	EXAMINATION UNDER
	:	M.P.E.P. §708.02(VIII)
	:	

This is a decision on the petition filed December 13, 2005 under 37 CFR §1.102(d) and M.P.E.P. §708.02(VIII): Accelerated Examination, to make the above-identified application special.

The petition is **GRANTED**.

M.P.E.P. §708.02, Section VIII, which sets out the prerequisites for a grantable petition for Accelerated Examination under 37 CFR §1.102(d), states in relevant part:

> A new application (one which has not received any examination by the examiner) may be granted special status provided that applicant (and this term includes applicant's attorney or agent) complies with each of the following items:
>
> (A) Submits a petition to make special accompanied by the fee set forth in 37 CFR 1.17(h);
>
> (B) Presents all claims directed to a single invention, or if the Office determines that all the claims presented are not obviously directed to a single invention, will make an election without traverse as a prerequisite to the grant of special status. The election may be made by applicant at the time of filing the petition for special status. Should applicant fail to include an election with the original papers or petition and the Office determines that a requirement should be made, the established telephone restriction practice will be followed. If otherwise proper, examination on the merits will proceed on claims drawn to the elected invention. If applicant refuses to make an election without traverse, the application will not be further examined at that time. The petition will be denied on the ground that the claims are not directed to a single invention, and the application will await action in its regular turn. Divisional applications directed to the nonelected inventions will not automatically be given special status based on papers filed with the petition in the parent application. Each such application must meet on its own all requirements for the new special status;

(C) Submits a statement(s) that a pre-examination search was made, listing the field of search by class and subclass, publication, Chemical Abstracts, foreign patents, etc. >The pre-examination search must be directed to the invention as claimed in the application for which special status is requested.< A search made by a foreign patent office satisfies this requirement >if the claims in the corresponding foreign application are of the same or similar scope to the claims in the U.S. application for which special status is requested<;

(D) Submits one copy each of the references deemed most closely related to the subject matter encompassed by the claims if said references are not already of record; and

(E) Submits a detailed discussion of the references, which discussion points out, with the particularity required by 37 CFR 1.111 (b) and (c), how the claimed subject matter is patentable over the references.

Because the petition filed December 13, 2005 meets the criteria set forth above, the petition to make special is **GRANTED**.

The application file is being forwarded to the Examiner for accelerated examination in accordance with M.P.E.P. §708.02, Section VIII. If the application is subsequently allowed, it will be given priority for printing. See M.P.E.P. §1309.

Pinchus M. Laufer
Special Programs Examiner
Technology Center 2100
Computer Architecture, Software, and Information Security
571-272-3599

PTO/SB/21 (09-04)
Approved for use through 07/31/2006. OMB 0651-0031
U.S. Patent and Trademark Office: U.S. DEPARTMENT OF COMMERCE
Under the Paperwork Reduction Act of 1995, no persons are required to respond to a collection of information unless it displays a valid OMB control number.

OIPE IAP70 SEP 24 2007 PATENT & TRADEMARK OFFICE

TRANSMITTAL FORM

(to be used for all correspondence after initial filing)

Total Number of Pages in this Submission	7

Application Number	10/614,217
Filing Date	July 8, 2003
First Named Inventor	Ellis T. CHA
Art Unit	2627
Examiner Name	Tianjie CHEN
Attorney Docket Number	2855/97

ENCLOSURES *(check all that apply)*

- [x] Fee Transmittal Form
  - [ ] Fee Attached
- [ ] Amendment / Reply
  - [ ] After Final
  - [ ] Affidavits/declaration(s)
- [ ] Extension of Time Request
- [ ] Express Abandonment Request
- [ ] Information Disclosure Statement
- [ ] Certified Copy of Priority Document(s)
- [ ] Reply to Missing Parts/ Incomplete Application
  - [ ] Reply to Missing Parts under 37 CFR1.52 or 1.53
- [ ] Drawing(s)
- [ ] Licensing-related Papers
- [ ] Petition
- [ ] Petition to Convert to a Provisional Application
- [ ] Power of Attorney, Revocation Change of Correspondence Address
- [ ] Terminal Disclaimer
- [ ] Request for Refund
- [ ] CD, Number of CD(s) _____
  - [ ] Landscape Table on CD
- [ ] After Allowance Communication to TC
- [ ] Appeal Communication to Board of Appeals and Interferences
- [ ] Appeal Communication to TC (Appeal Notice, Brief, Reply Brief)
- [ ] Proprietary Information
- [ ] Status Letter
- [x] Other Enclosure(s) *(please identify below)*: see Remarks

Remarks

1. Request for Certificate of Correction
2. Certificate of Correction
3. US 7,233,460 Patent –with changes marked in Red [not included in page count]
4. Post Card

SIGNATURE OF APPLICANT, ATTORNEY, OR AGENT

Firm	Kenyon & Kenyon LLP		
Signature			
Printed Name	Jeffrey R. Joseph		
Date	September 20, 2007	Reg. No.	54,204

CERTIFICATE OF TRANSMISSION/MAILING

I hereby certify that this correspondence is being facsimile transmitted to the USPTO or deposited with the United States Postal Service with sufficient postage as first class mail in an envelope addressed to: Commissioner for Patents, P.O. Box 1450, Alexandria, VA 22313-1450 on the date shown below. **M/S: CERTIFICATE OF CORRECTION BRANCH**

Signature			
Typed or printed name	Blanche Guzman-Salmon	Date	September 20, 2007

This collection of information is required by 37 CFR 1.5. The information is required to obtain or retain a benefit by the public which is to file (and by the USPTO to process) an application. Confidentiality is governed by 35 U.S.C. 122 and 37 CFR 1.11 and 1.14. This collection is estimated to 12 minutes to complete, including gathering, preparing, and submitting the completed application form to the USPTO. Time will vary depending upon the individual case. Any comments on the amount of time you require to complete this form and/or suggestions for reducing this burden, should be sent to the Chief Information Officer, U.S. Patent and Trademark Office, U.S. Department of Commerce, P.O. Box 1450, Alexandria, VA 22313-1450. DO NOT SEND FEES OR COMPLETED FORMS TO THIS ADDRESS. **SEND TO: Commissioner for Patents, P.O. Box 1450, Alexandria, VA 22313-1450.**
If you need assistance in completing the form, call 1-800-PTO-9199 and select option 2.

SEP 26 2007

PTO/SB/17 (10-04v2)
Approved for use through 07/31/2006. OMB 0651-0032
U.S. Patent and Trademark Office: U.S. DEPARTMENT OF COMMERCE
Under the Paperwork Reduction Act of 1995, no persons are required to respond to a collection of information unless it displays a valid OMB control number.

OIPE IAP10 SEP 24 2007 PATENT & TRADEMARK OFFICE

FEE TRANSMITTAL for FY 2006

Effective 10/01/2004. Patent fees are subject to annual revision.

☒ Applicant claims small entity status. See 37 CFR 1.27

TOTAL AMOUNT OF PAYMENT ($) **100.00**

Complete if Known	
Application Number	10/614,217
Filing Date	July 8, 2003
First Named Inventor	Ellis T. CHA
Examiner Name	Tianjie CHEN
Art Unit	2627
Attorney Docket No.	2855/97

METHOD OF PAYMENT *(check all that apply)*

☐ Check ☐ Credit card ☐ Money Order ☐ Other ☐ None

☒ Deposit Account:

Deposit Account Number: **11-0600**

Deposit Account Name: **Kenyon & Kenyon LLP**

The Director is authorized to: *(check all that apply)*

☒ Charge fee(s) indicated below ☒ Credit any overpayments
☒ Charge any additional fee(s) or any underpayment of fee(s)
☒ Charge fee(s) indicated below, **except for the filing fee** to the above-identified deposit account.

FEE CALCULATION

1. BASIC FILING FEE

Large Entity Fee Code	Large Entity Fee ($)	Small Entity Fee Code	Small Entity Fee ($)	Fee Description	Fee Paid
1001	790	2001	395	Utility filing fee	
1002	350	2002	175	Design filing fee	
1003	550	2003	275	Plant filing fee	
1004	790	2004	395	Reissue filing fee	
1005	160	2005	80	Provisional filling fee	
				SUBTOTAL (1)	($) 0

2. EXTRA CLAIM FEES FOR UTILITY AND REISSUE

			Extra Claims		Fee from below		Fee Paid
Total Claims		-20 **	=	X	50.00	=	
Independent Claims		-3 **	=	X	200.00	=	
Multiple Dependent				X		=	

Large Entity Fee Code	Large Entity Fee ($)	Small Entity Fee Code	Small Entity Fee ($)	Fee Description
1202	50	2202	25	Claims in excess of 20
1201	200	2201	100	Independent claims in excess of 3
1203	360	2203	180	Multiple dependent claim, if not paid
1204	200	2204	100	** Reissue independent claims over original patent
1205	50	2205	25	** Reissue claims in excess of 20 and over original patent

SUBTOTAL (2) ($) 0

***or number previously paid, if greater; For Reissues, see above*

FEE CALCULATION (continued)

3. ADDITIONAL FEES

Large Entity Fee Code	Large Entity Fee ($)	Small Entity Fee Code	Small Entity Fee ($)	Fee Description	Fee Paid
1051	130	2051	65	Surcharge - late filing fee or oath	
1052	50	2052	25	Surcharge - late provisional filing fee or cover sheet.	
1053	130	1053	130	Non-English specification	
1812	2,520	1812	2,520	For filing a request for *ex parte* reexamination	
1804	920*	1804	920*	Requesting publication of SIR prior to Examiner action	
1805	1,840*	1805	1,840*	Requesting publication of SIR after Examiner action	
1251	120	2251	60	Extension for reply within first month	
1252	450	2252	225	Extension for reply within second month	
1253	1,020	2253	510	Extension for reply within third month	
1254	1,590	2254	795	Extension for reply within fourth month	
1255	2,160	2255	1,080	Extension for reply within fifth month	
1401	500	2401	250	Notice of Appeal	
1402	500	2402	250	Filing a brief in support of an appeal	
1403	1,000	2403	500	Request for oral hearing	
1451	1,510	1451	1,510	Petition to institute a public use proceeding	
1452	500	2452	250	Petition to revive – unavoidable	
1453	1,500	2453	750	Petition to revive – unintentional	
1501	1,400	2501	685	Utility issue fee (or reissue)	
1502	490	2502	245	Design issue fee	
1503	660	2503	330	Plant issue fee	
1460	130	1460	130	Petitions to the Commissioner	
1807	50	1807	50	Processing fee under 37 CFR 1.17 (q)	
1806	180	1806	180	Submission of Information Disclosure Stmt	
8021	40	8021	40	Recording each patent assignment per property (times number of properties)	
1809	790	2809	395	Filing a submission after final rejection (37 CFR § 1.129(a))	
1810	790	2810	395	For each additional invention to be examined (37 CFR § 1.129(b))	
1801	790	2801	395	Request for Continued Examination (RCE)	
1802	900	1802	900	Request for expedited examination of a design application	

Other fee (specify) **Request for Certificate of Correction** 100.00

*Reduced by Basic Filing Fee Paid

SUBTOTAL (3) ($) 100.00

SUBMITTED BY				Complete *(if applicable)*	
Name (Print/Type)	Jeffrey R. Joseph	*Registration No. (Attorney/Agent)*	54,204	*Telephone*	(408) 975-7500
Signature	Jeffrey R. Joseph			*Date*	September 20, 2007

WARNING: Information on this form may become public. Credit card information should not be included on this form. Provide credit card information and authorization on PTO-2038.

This collection of information is required by 37 CFR 1.17 and 1.27. The information is required to obtain or retain a benefit by the public which is to file (and by the USPTO to process) an application. Confidentiality is governed by 35 U.S.C. 122 and 37 CFR 1.14. This collection is estimated to take 12 minutes to complete, including gathering, preparing, and submitting the completed application form to the USPTO. Time will vary depending upon the individual case. Any comments on the amount of time you require to complete this form and/or suggestions for reducing this burden, should be sent to the Chief Information Officer, U.S. Patent and Trademark Office, U.S. Department of Commerce, P.O. Box 1450, Alexandria, VA 22313-1450. DO NOT SEND FEES OR COMPLETED FORMS TO THIS ADDRESS. **SEND TO: Commissioner for Patents, P.O. Box 1450, Alexandria, VA 22313-1450.**

If you need assistance in completing this form, call 1-800-PTO-9199 (1-800-786-9199) and select option 2.

SEP 26 20

C of C

Denied. /Tianjie Chen/ 10/30/2008

OIPE IAP70 SEP 24 2007 PATENT & TRADEMARK OFFICE

Patent **Attorney Docket No.: 2855/97**

IN THE UNITED STATES PATENT AND TRADEMARK OFFICE

APPLICANTS	:	Ellis R. CHA
SERIAL NO.	:	10/614,217
FILED	:	July 8, 2003
PATENT NO.	:	7,233,460 B2
ISSUED	:	June 19, 2007
FOR	:	ULTRA-LOW FLYING HEIGHT SLIDER DESIGN
GROUP ART UNIT	:	2627
EXAMINER	:	Tianjie CHEN

Certificate SEP 26 2007 of Correction

M/S: CERTIFICATE OF CORRECTION BRANCH
Commissioner for Patents
P.O. Box 1450
Alexandria, VA 22313-1450

CERTIFICATE OF MAILING

I hereby certify that this correspondence is being facsimile transmitted to the United States Patent and Trademark Office via facsimile number: (571) 273-8300 or deposited with the United States Postal Service as first class mail in an envelope addressed to: M/S: CERTIFICATE OF CORRECTION BRANCH, Commissioner for Patents, P.O. Box 1450, Alexandria, VA 22313-1450 on

Dated: September 20, 2007 Signature Blanche Guzman-Salmon
Blanche Guzman-Salmon

REQUEST FOR CERTIFICATE OF CORRECTION

Dear Sir:

We have reviewed the above patent and have found errors in the printing of the patent. We respectfully request that the enclosed Certificate of Correction on Form PTO-1050 be issued correcting the mistakes set forth therein under authority of 35 U.S.C. §255. The exact column and line number where the errors occurred in the patent are listed on the enclosed certificate.

09/25/2007 EEKUBAY1 00000011 110600 7233460
01 FC:1811 100.00 DA

SEP 26 2007

The errors that appear in the patent are various typographical errors made by Applicant and therefore, a fee is required.

Please charge payment of the Certificate of Correction fee of **$100.00** to Deposit Account No. **11-0600**.

The Office is hereby authorized to charge any additional fees, or credit any overpayments, to Kenyon & Kenyon LLP, Deposit Account No. **11-0600**.

Respectfully submitted,

KENYON & KENYON LLP

Dated: September 20, 2007

By: Jeffrey R. Joseph
(Reg. No. 54,204)

KENYON & KENYON LLP
333 West San Carlos St., Suite 600
San Jose, CA 95110

Telephone: (408) 975-7500
Facsimile: (408) 975-7501

SJ01 106919 v1

SEP 26 2007

PTO/SB/44 (05-03)
Approved for use through 01/31/2004. OMB 0651-0033
U.S. Patent and Trademark Office; U.S. DEPARTMENT OF COMMERCE
Under the Paperwork Reduction Act of 1995, no persons are required to respond to a collection of information unless it displays a valid OMB control number.
(Also Form PTO-1050)

UNITED STATES PATENT AND TRADEMARK OFFICE
CERTIFICATE OF CORRECTION

PATENT NO : 7,233,460 B2

DATED : June 19, 2007

INVENTOR(S) : Ellis T. Cha

It is certified that error appears in the above-identified patent and that said Letters Patent is hereby corrected as shown below:

Column 6, Line 17
"eg., 5 mils (millionths of an inch) or 130 microns (or micrometers)" should be --eg., 5 microns (or micrometers)or 130 microns (or micrometers)--

Column 7, Line 45
"30 mils" should be --30 micrometers--

Column 9, Line 12 [Claim 5]
"30 mils" should be --30 microns--

Column 9, Line 56 [Claim 13]
"30 mils" should be --30 microns--

MAILING ADDRESS OF SENDER: KENYON & KENYON LLP
333 W. San Carlos, Ste 600
San Jose, CA 95110
Telephone: (408) 975-7500
Facsimile: (408) 975-7501
Attorney Ref.: 2855/97

PATENT NO. 7,233,460 B2

Date: Sept. 20, 2007

No. of additional copies

This collection of information is required by 37 CFR 1.322, 1.323, and 1.324. The information is required to obtain or retain a benefit by the public which is to file (and by the USPTO to process) an application. Confidentiality is governed by 35 U.S.C. 122 and 37 CFR 1.14. This collection is estimated to take 1.0 hour to complete, including gathering, preparing, and submitting the completed application form to the USPTO. Time will vary depending upon the individual case. Any comments on the amount of time you require to complete this form and/or suggestions for reducing this burden, should be sent to the Chief Information Officer, U.S. Patent and Trademark Office, U.S. Department of Commerce, P.O. Box 1450, Alexandria, VA 22313-1450. DO NOT SEND FEES OR COMPLETED FORMS TO THIS ADDRESS. **SEND TO: Commissioner for Patents, P.O. Box 1450, Alexandria, VA 22313-1450.**

If you need assistance in completing the form, call 1-800-PTO-9199 and select option 2.

SEP 26 20..

US007233460B2

(12) **United States Patent**
Cha

(10) **Patent No.: US 7,233,460 B2**
(45) **Date of Patent: Jun. 19, 2007**

(54) **ULTRA-LOW FLYING HEIGHT SLIDER DESIGN**

(75) Inventor: **Ellis T. Cha**, San Ramon, CA (US)

(73) Assignee: **SAE Magnetics (H.K.) Ltd.**, Kwai Chung, N.T. (HK)

(*) Notice: Subject to any disclaimer, the term of this patent is extended or adjusted under 35 U.S.C. 154(b) by 0 days.

(21) Appl. No.: **10/614,217**

(22) Filed: **Jul. 8, 2003**

(65) **Prior Publication Data**

US 2005/0010684 A1 Jan. 13, 2005

(51) **Int. Cl.**
G11B 21/21 (2006.01)

(52) **U.S. Cl.** **360/236**

(58) **Field of Classification Search** 360/236.3, 360/235.4, 235.6, 235.7, 235.8, 235.9, 236, 360/236.1, 236.2, 236.6
See application file for complete search history.

(56) **References Cited**

U.S. PATENT DOCUMENTS

6,556,381	B2 *	4/2003	Kohira et al.	360/236.3
6,594,113	B2 *	7/2003	Rao et al.	360/235.8
6,628,480	B2 *	9/2003	Kohira et al.	360/235.6
6,678,119	B1 *	1/2004	Pendray et al.	360/236.6
2003/0218832	A1 *	11/2003	Tsuchiyama et al.	360/235.8
2004/0090709	A1 *	5/2004	Mundt et al.	360/236.3
2004/0212929	A1 *	10/2004	Otsuka	360/235.7

* cited by examiner

Primary Examiner—Tianjie Chen
(74) *Attorney, Agent, or Firm*—Kenyon & Kenyon

(57) **ABSTRACT**

A subambient pressure air bearing slider for disk drives and the like is presented where features of the slider are modular, in that certain parameters of the slider can be modified independently of one another. In one example, lateral dimensions and placement of side and trailing air bearing surfaces can be used to control flying height sensitivity due to crowning in the slider. Longitudinal dimensions of the side air bearing surfaces can be used to control flying height sensitivity due to camber in the slider body. Low-profile members (e.g., ones that do not form air bearing surfaces) may be used to control the dimensions of the subambient pressure region to control overall flying height.

23 Claims, 6 Drawing Sheets

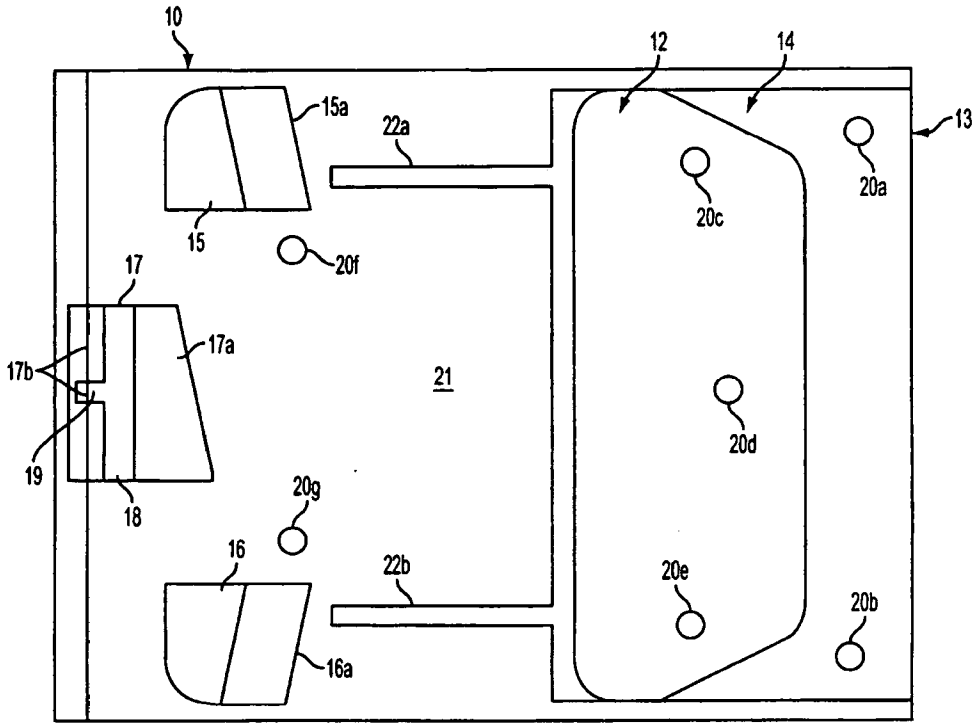

SEP 2 3 2007

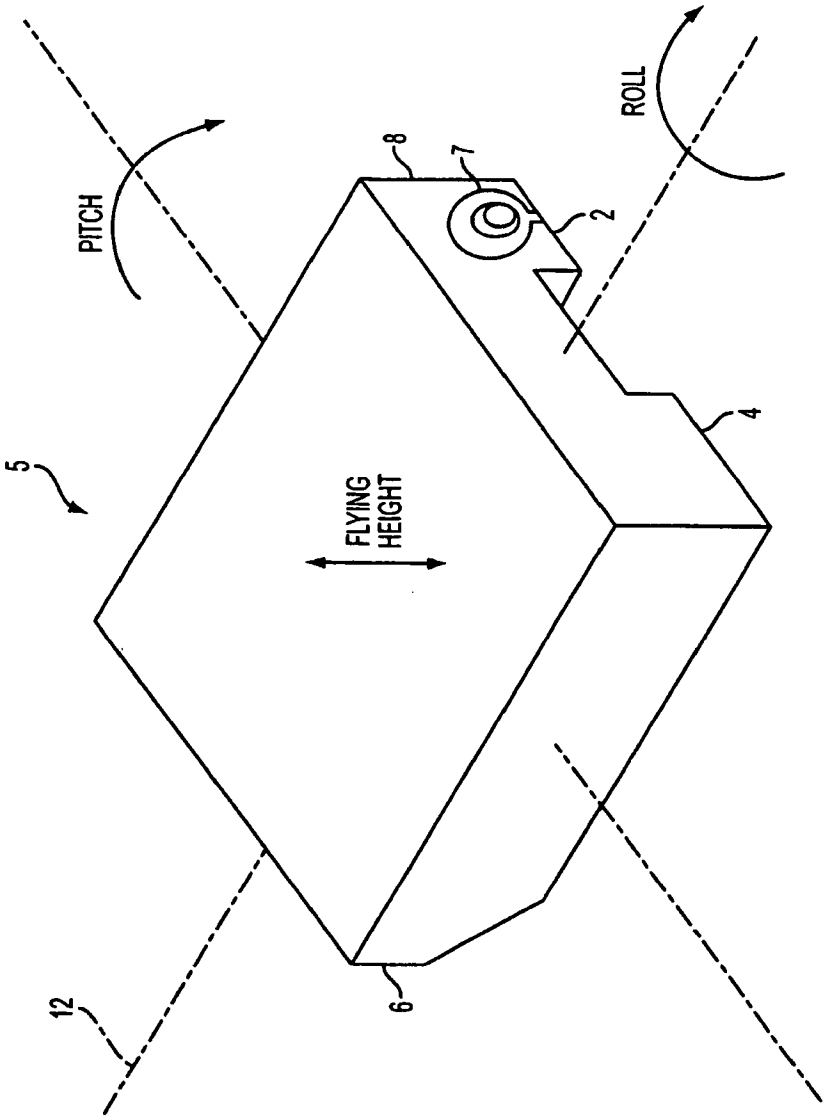

FIG. 1
PRIOR ART

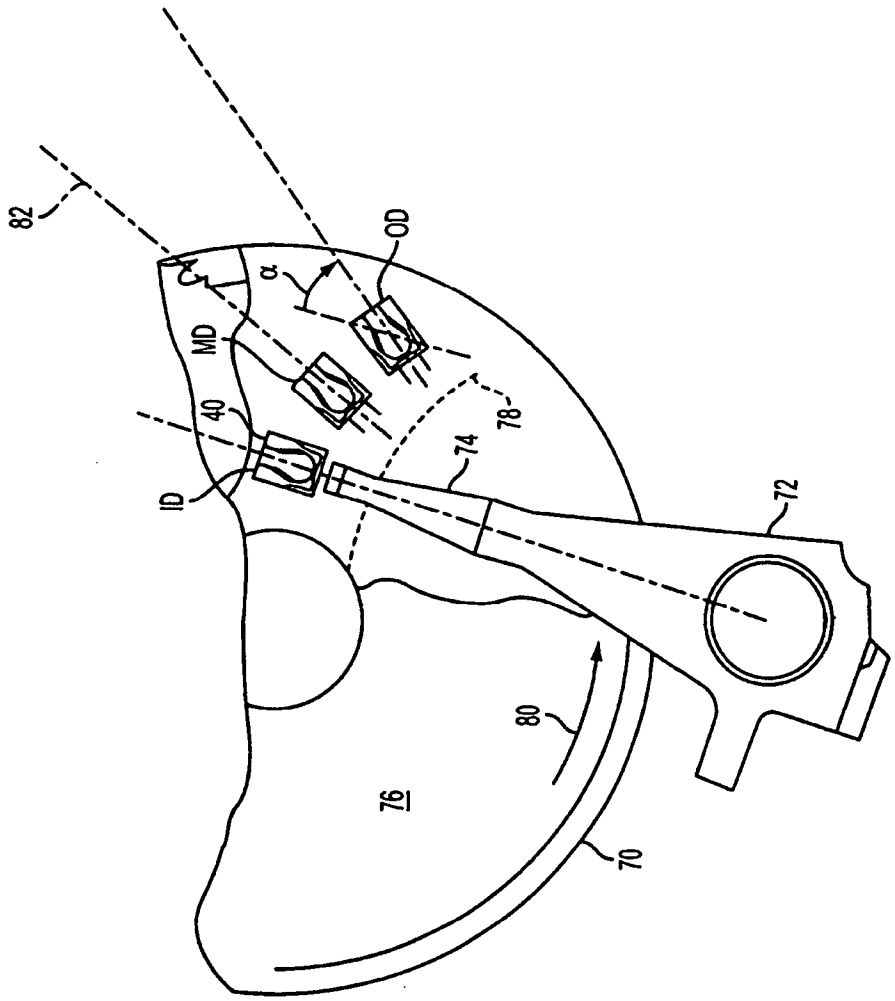

FIG. 2

SEP 2 0 2007

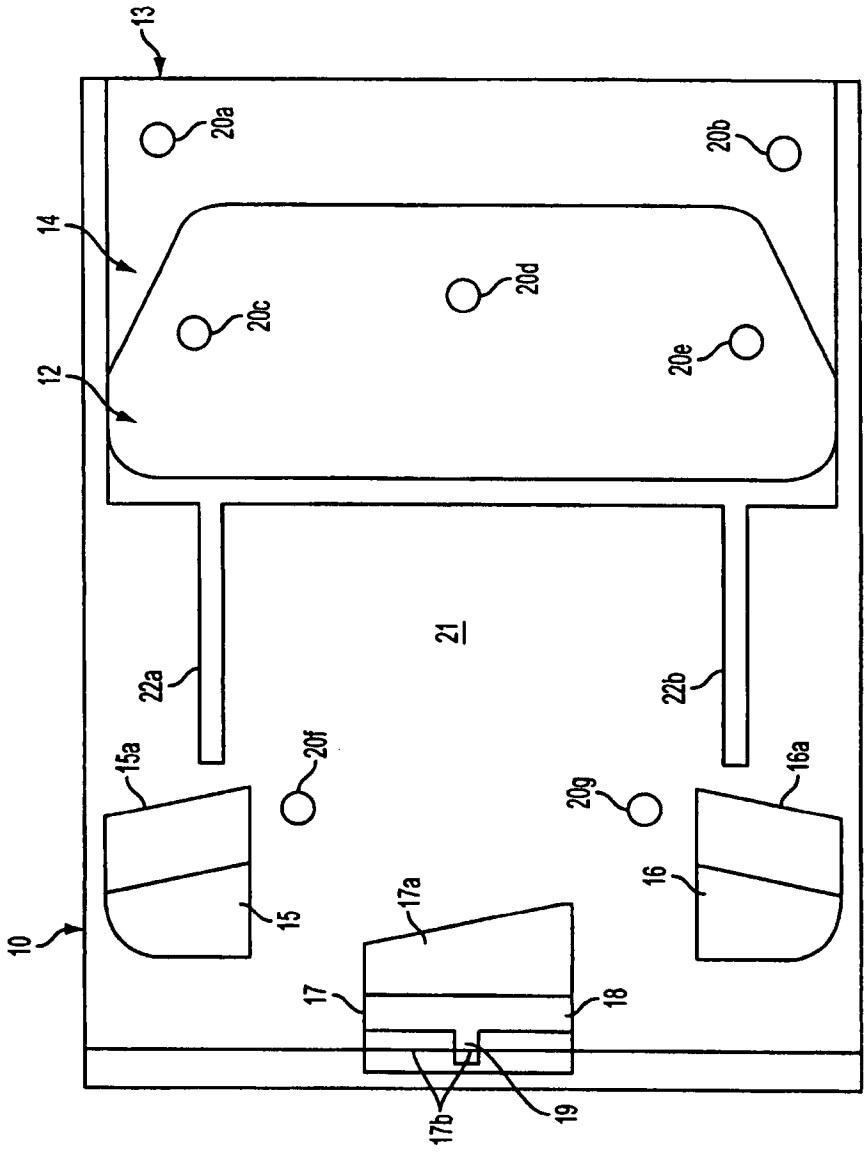
10
12
13
14
15
15a
16
16a
17
17a
17b
18
19
20a
20b
20c
20d
20e
20f
20g
21
22a
22b

FIG. 3

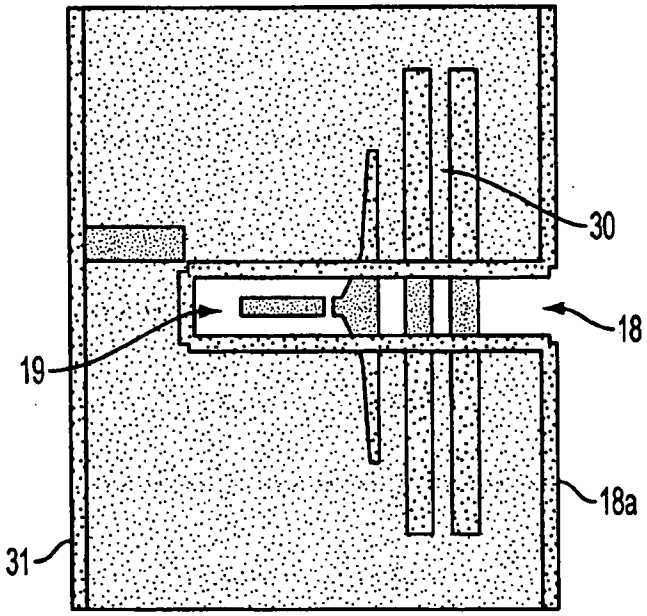

FIG. 4

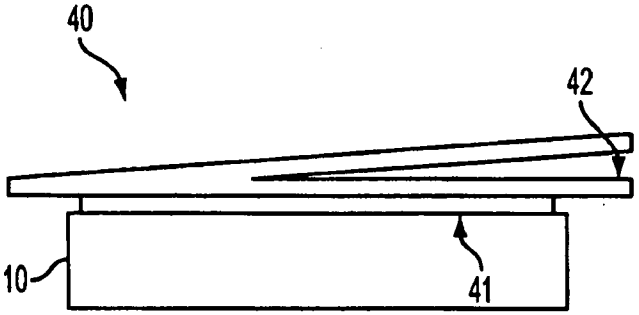

FIG. 5

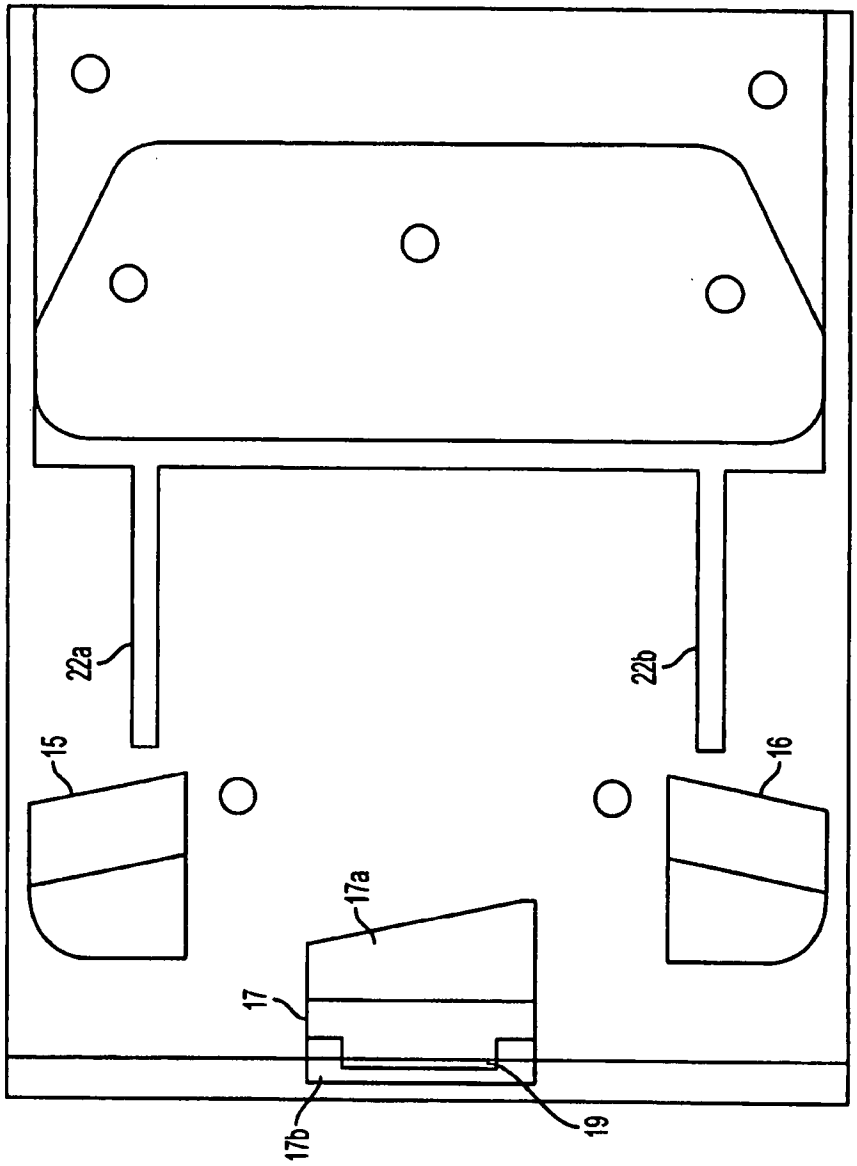

FIG. 6A

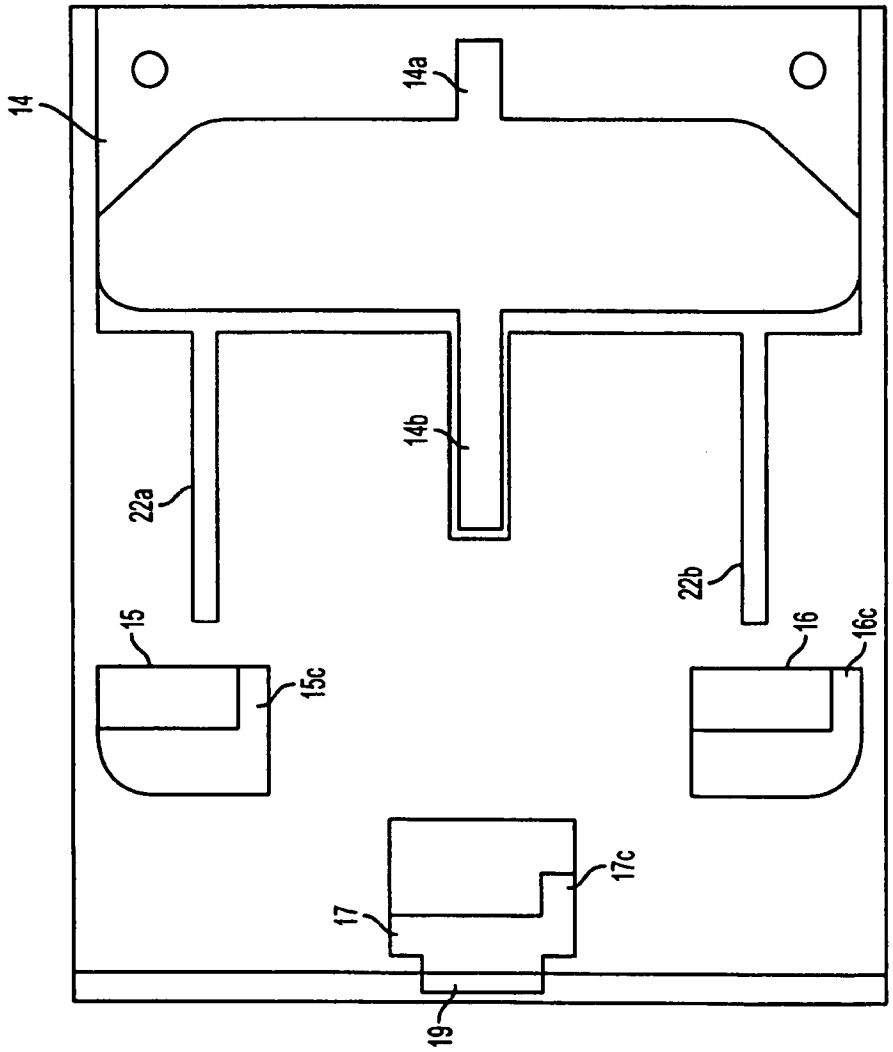

FIG. 6B

SEP 2 6 2007

ULTRA-LOW FLYING HEIGHT SLIDER DESIGN

FIELD OF THE INVENTION

The present invention is directed to air bearing slider designs in disk drives. More particularly, the present invention pertains to a modular design for an air bearing surfaces of a slider to achieve an ultra-low flying height.

BACKGROUND OF THE INVENTION

Hard disk drives are common information storage devices essentially consisting of a series of rotatable disks that are accessed by magnetic reading and writing elements. These data transferring elements, commonly known as transducers, are typically carried by and embedded in a slider body that is held in a close relative position over discrete data tracks formed on a disk to permit a read or write operation to be carried out. In order to properly position the transducer with respect to the disk surface, an air bearing surface (ABS) formed on the slider body experiences a fluid air flow that provides sufficient lift force to "fly" the slider and transducer above the disk data tracks. The high speed rotation of a magnetic disk generates a stream of air flow or wind along its surface in a direction substantially parallel to the tangential velocity of the disk. The air flow cooperates with the ABS of the slider body which enables the slider to fly above the spinning disk. In effect, the suspended slider is physically separated from the disk surface through this self-actuating air bearing. The ABS of a slider is generally configured on the slider surface facing the rotating disk, and greatly influences its ability to fly over the disk under various conditions.

Some of the major objectives in ABS designs are to fly the slider and its accompanying transducer as close as possible to the surface of the rotating disk, and to uniformly maintain that constant close distance regardless of variable flying conditions. The height or separation gap between the air bearing slider and the spinning magnetic disk is commonly defined as the flying height. In general, the mounted transducer or read/write element flies only approximately a few micro-inches above the surface of the rotating disk. The flying height of the slider is viewed as one of the most critical parameters affecting the magnetic disk reading and recording capabilities of a mounted read/write element. For example, there are many advantages for reducing or having a relatively small flying height. A relatively small flying height allows the transducer to achieve greater resolution between different data bit locations and magnetic fields emanating from closely defined regions on the disk surface. Also, a low flying slider is known to provide improved high density recording or storage capacity of magnetic disks which is usually limited by the distance between the transducer and the magnetic media. Narrow separation gaps permit shorter wavelength signals to be recorded or read as a result. At the same time, with the increasing popularity of lightweight and compact notebook type computers that utilize relatively small yet powerful disk drives, the need for a progressively smaller slider body with a lower flying height has continually grown.

It has also been observed that a constant flying height provides desirable benefits which may be more readily achieved through particular ABS designs. Fluctuations in flying height are known to adversely affect the resolution and the data transfer capabilities of the accompanying transducer or read/write element. The amplitude of the signal being recorded or read does not vary as much when the flying height is relatively constant. Additionally, changes in flying height may result in unintended contact between the slider assembly and the magnetic rotating disk. Sliders are generally considered to be either direct contacting, pseudo-contacting or flying sliders which is descriptive of their intended contact with a rotating disk. Regardless of the type of slider, it is often desirable to avoid unnecessary contact with the surface of the spinning magnetic disk so as to reduce the wear on both the slider body and the disk. The deterioration or wear of the recording media may lead to the loss of recorded data, while slider wear may also result in the ultimate failure of the transducer or magnetic element.

What often causes changes to the flying height is the continual high speed movement of the slider across the rotating disk while performing read or write operations. For example, depending on the radial position of the slider, the respective linear velocity of the disk varies. Higher velocities are observed at the outer edge of the rotating disk, while lower velocities are found at the inner edge. As a result, the air bearing slider flies at different relative speeds at different radial positions relative to the disk. Because sliders typically fly higher at higher velocities, there is a tendency for flying heights to increase when positioned above the outer regions of the disk. At the same time, lower velocities at the inner regions of the disk cause the slider to fly lower. Accordingly, slider designs must account for the noticeable effect that variations in radial position, and relative velocity, have on the flying height.

The flying height of a slider is also adversely affected by changes in skew. The skew angle is defined and measured as the angle formed between the longitudinal axis of the slider body and the direction of the air flow tangential to the disk rotation. When the mounted slider is positioned near the inner or outer edges of the spinning disk, its longitudinal axis is often skewed in relation to the direction of the air flow. The longitudinal axis of the slider may be defined as a center line of reference running along the length of the slider body. These angular orientations or skew angles typically vary as a rotary actuator arm and gimbal suspension assembly turns about its pivot point thereby moving the slider in an arcuate path across the rotating disk. In view of the growing demand for compact disk drives having relatively smaller actuator arms, larger skew angles are ever more present because of the shortened arm length. It has often been observed that at skew values above zero, sliders are pressurized at reduced values which cause an undesirable decrease in flying height. Even a relatively moderate skew angle range adversely affects the flying capabilities of a slider. As a result, ABS designs continually attempt to minimize slider sensitivity to changes in skew.

Another fluctuation in flying height may be identified as slider roll. The roll angle is measured and defined by the difference in flying height between the longitudinal sides of the slider. Whenever a slider flies at skew with respect to the direction of the air flow, an unequal pressure distribution tends to occur between the ABS and the disk. This imbalance causes slider roll where one side of the slider body is closer to the disk surface than the other side. A slider, however, is preferably positioned at a constant slider roll regardless of any changes in the flying conditions including differences in tangential velocity between the inner and outer tracks of the rotating disk, and continuous lateral movement above the surface of the disk or varying skew angles.

As shown in FIG. **1** an ABS design known for a common catamaran slider **5** may be formed with a pair of parallel rails **2** and **4** that extend along the outer edges of the slider surface

facing the disk. Other ABS configurations including three or more additional rails, with various surface areas and geometries, have also been developed. The two rails **2** and **4** typically run along at least a portion of the slider body length from the leading edge **6** to the trailing edge **8**. The leading edge **6** is defined as the edge of the slider that the rotating disk passes before running the length of the slider **5** towards a trailing edge **8**. As shown, the leading edge **6** may be tapered despite the large undesirable tolerance typically associated with this machining process. The transducer or magnetic element **7** is typically mounted at some location along the trailing edge **8** of the slider as shown in FIG. **1**. The rails **2** and **4** form an air bearing surface on which the slider flies, and provide the necessary lift upon contact with the air flow created by the spinning disk. As the disk rotates, the generated wind or air flow runs along underneath, and in between, the catamaran slider rails **2** and **4**. As the air flow passes beneath the rails **2** and **4**, the air pressure between the rails and the disk increases thereby providing positive pressurization and lift. Catamaran sliders generally create a sufficient amount of lift, or positive load force, to cause the slider to fly at appropriate heights above the rotating disk. In the absence of the rails **2** and **4**, the large surface area of the slider body **5** would produce an excessively large air bearing surface area. In general, as the air bearing surface area increases, the amount of lift created is also increased. Without rails, the slider would therefore fly too far from the rotating disk thereby foregoing all of the described benefits of having a low flying height.

As illustrated in FIG. **2**, a head gimbal assembly **40** often provides the slider with multiple degrees of freedom such as vertical spacing, or pitch angle and roll angle which describe the flying height of the slider. As shown in FIG. **2**, a suspension **74** holds the HGA **40** over the moving disk **76** (having edge **70**) and moving in the direction indicated by arrow **80**. In operation of the disk drive shown in FIG. **2**, an actuator **72** moves the HGA over various diameters of the disk **76** (e.g., inner diameter (ID), middle diameter (MD) and outer diameter (OD)) over arc **78**.

Although catamaran sliders are initially effective in providing an adequate flying height, they are especially sensitive to varying skew angle ranges and other adverse flying conditions. When the skew angle is increased, such as when the flying slider moves across the rotating disk, the air pressure distribution beneath the rails may become distorted. By accessing both inner and outer portions of a disk at relatively high speed, air is introduced in an uneven amount under each rail which typically causes slider roll as depicted in FIG. **1**. As a result, the slider experiences an uneven distribution of pressure which may cause the slider to roll in one direction such that the flying height is not uniform between the ABS rails. The mounted transducer may therefore be unable to operate effectively or accurately perform its data transfer operations. Regardless of the sensitivity of the ABS rails to various skew ranges and other adverse flying conditions, this rail design is widely acknowledged as a general configuration that provides effective pressurization or lift to enable a slider to fly.

In order to counteract the positive pressurization of the flying slider body to provide a low and constant flying height, it is known to form an ABS that also provides negative or subambient pressurization to pull or draw the slider body towards the disk. For example, negative pressure air bearing (NPAB) or self loading sliders have been known to provide a counteracting negative pressure load. In this dual pressurization scheme, the ABS may be generally formed with a leading edge, a trailing edge, side rails, and a cross-rail that extends between the side rails in a basic H-shaped orientation. The cross-rail, which is often positioned closer to the leading edge than the trailing edge of the slider, creates a subambient pressure region trailing the cross-rail and in between the side-rails. The subambient pressure region creates a negative pressure or load that counteracts the positive pressure generated along the side rail portion of the ABS. This counteraction of negative and positive forces has been known to increase the stability and air bearing stiffness of the slider, provide rapid slider take-off, and reduce its sensitivity to variations in conditions such as changing disk velocity and radial movement which cause fluctuations in flying height. The compensating changes in positive and negative pressure, in accordance with the varying velocity between the inner and outer tracks of the disk, contributes to the overall objective of maintaining a substantially constant and steady flying height. However, the offsetting forces created in a subambient pressurization scheme may often present undesirable effects that actually cause variations in flying height. A NPAB slider often exhibits noticeable roll as well, and a reduction in flying height at skewed conditions because of unequal pressurization or distribution of air beneath the rails.

All of the aforementioned ABS configurations and modifications for air bearing sliders attempt to achieve a low and constant flying height. Different degrees of effectiveness are provided by these ABS designs which overall do not control flying height, or pitch and roll angles very well. For example, many existing ABS designs have been observed to exhibit an extremely increased slider roll angle over outer tracks regions of a disk. These configurations also typically fail to control the increase in slider pitch angle when moving from inner track to the outer track regions.

Recording density for hard disks has increased over time necessitating a lower flying height for the air bearing slider. In the art, a flying height of less than 10 nm is referred to as an ultra-low flying height. As described above, one problem seen with lower flying heights is that there is more of a risk for head/disk contact, which can cause damage to the slider head and/or the magnetic recording disk. In view of this, there is a need for an ABS design, in particular for ultra-low flying height implementations that is both robust and stable. Robust in that the ABS design has a flying height that is stable and insensitive to external variations such as manufacturing tolerances, air properties, and environmental conditions (e.g., temperature).

SUMMARY OF THE INVENTION

The present invention provides a subambient pressure air bearing slider with a plurality of air bearing surfaces (ABSs) that provide an ultra-low and constant flying height even in varying temperature environments. The design may be referred to as "modular" in that individual parameters for the slider, such as crown, camber, and sub-ambient pressure, may be separately controlled through the dimensions and placement of the various components of the slider. In other words, controlling one of these parameters may be effectively "decoupled" from other affecting others of these parameters. For example, crown sensitivity of the slider may be controlled by controlling the length and placement of side ABS structures in addition to altering the dimensions of a trailing ABS. Camber sensitivity may be controlled by setting the width of the side ABS structures. Finally, once camber and crown sensitivity for the slider are set, overall flying height for the slider may be set by appropriate

SEP 26 2007

placement of low-profile members creating a sub-ambient pressure region between them, resulting in a lower flying height for the slider.

BRIEF DESCRIPTION OF THE DRAWINGS

FIG. **1** is a perspective view of a flying slider with a read and write element assembly having a tapered conventional catamaran air bearing slider configuration.

FIG. **2** is a plan view of a mounted air bearing slider in accordance with the present invention (not drawn to scale).

FIG. **3** is a bottom plan view of a subambient pressure slider constructed according to a an embodiment of the present invention.

FIG. **4** is a plan view of a portion of the trailing air bearing surface of FIG. **3**.

FIG. **5** is a side view of head flexure assembly including the slider of FIG. **3**.

FIGS. **6***a* and **6***b* are alternative designs for the slider of FIG. **3** constructed according to embodiments of the present invention.

DETAILED DESCRIPTION OF THE INVENTION

FIG. **3** is a plan view of the bottom side of a slider **10** for a subambient pressure slider in accordance with an embodiment of the present invention. It will be understood that for purposes of describing particular features of an ABS as follows, the entire slider body, which may be formed from a substrate material such as Al_2O_3TiC, is not shown. The slider **10** illustrated in FIG. **3** includes a leading air bearing surface **12**. Air bearing surface is set off from a leading edge **13** of the slider **10** by a leading step **14**. In this embodiment, the leading step **14** has a depth relative to the leading air bearing surface **12**. In this embodiment the depth is between 2 and 10 microinches. Two side air bearing surfaces **15**, **16** are provided at the inner and outer edges of the slider **10**. Though two such surfaces are provided, the present invention is not limited to this number. Each of the air bearing surfaces **15**, **16** includes a secondary structure **15***a*, **16***b*, respectively that is at a lower height. In this embodiment, the secondary structures **15***a*–**16***b* are at a height equal to the height of the leading step **14**. A trailing air bearing surface **17** is provided at a trailing edge of the slider **10**. The air bearing surfaces are at the same height in this embodiment. Air bearing surface **17** includes a first rectangular surface **18** that is relatively larger than a trailing rectangular surface **19** (described in more detail below). In this embodiment, the trailing air bearing surface **17** has secondary structures **17***a* and **17***b*, which are at the same height as secondary structures **15***a*, **16***a*. The secondary structures **15***a*, **16***a*, **17***a* as well as the leading step **14** provide pressurization for incoming air and a lifting force for the slider **10**. A magnetic recording device or head is located in the slider body at its trailing edge (not shown specifically in FIG. **3**).

A number of stiction reduction pads **20***a*–*g* may be provided that extend higher than the air bearing surfaces. The stiction reduction pads may be made from the same material as the slider body and include a diamond-like-carbon material at its ends to reduce starting friction forces and prevent damage to the air bearing surfaces and other components of the slider.

Slider **10** includes a negative pressure area **21** which is contained by the leading edge step **14** and/or leading air bearing surface **12** along with low-profile bars **22***a* and **22***b*. In this embodiment, the low-profile bars **22***a*–*b* have a relative narrow width (e.g., between 30 and 60 micrometers). Also, in this embodiment, the height of the low-profile bars is the same as the leading edge step **14** and secondary structures **15***a*, **16***a*, **17***a* of the side and trailing ABSs.

The design of the slider of FIG. **3** can be considered somewhat "modular" in design, in that there are at least three elements whose dimensions can be separately selected to address different aspects of the slider's characteristics.

For example, crown or crowning is a characteristic of a slider. It refers to the curvature of the air bearing surfaces from the leading edge to the trailing edge of the slider. First rectangular surface **18** is designed to be narrow with respect to the length of the slider **10** and wide with respect to the side-to-side dimension of the slider. Second rectangular surface is designed to be very narrow (e.g., on the order of the mask alignment tolerances of the fabrication processes; ~~e.g., 5 mils (millionths of an inch) or 130 microns (or micrometers)).~~ e.g. 5 microns (or micrometers) or 130 microns (or micrometers)). Since the trailing ABS **17** provides such a high pressure region, reducing the width of the second rectangular surface **19**, reduces the flying height of the slider so that it can get below the 10 nm threshold for ultra low flying. Because the region is so narrow, the chance of this area contacting the recording medium is greatly reduced. Even when contact occurs, the contact area would be very small resulting in minimal damages to the read/write element under it as well as the slider itself.

An enlarged view of the second rectangular surface **19** is shown in FIG. **4**. The second rectangular area begins at the trailing edge **18***a* of the first rectangular area towards the trailing edge **31** of the slider. As seen in FIG. **4**, the width of the second rectangular area **19** can be smaller than the width of portions of the read/write element **30**. Accordingly, during the etching operation to create the second rectangular area **19**, care must be taken to prevent damage to the components of the read/write element **31** either through etching or through corrosion. Controlling the dimensions of the trailing ABS **17**, the slider can be made so as to lower the sensitivity to crowning in the slider. First, since crowning is a lengthwise parameter for the slider, a narrow air bearing surface induces minimal flying height changes with respect to the changes in the curvature of the ABS surface. Second, the leading portion of the trailing ABS **17** is substantially flat, which also lowers sensitivity of the flying height of the slider due to crowning.

Referring back to FIG. **3**, side air bearing surfaces **15** and **16** provide roll stiffness to the slider during operation. The dimensions of these ABSs, not only effect the slider's sensitivity to crown, but also affect sensitivity to a second parameter of the slider, camber (or also known as cross-crown). Camber refers to curvature in the slider between lateral sides of the slider body. In particular, the side-to-side width of the side ABSs **15**, **16** make the slider more sensitive to camber. Also the front to trailing edge width of the side ABSs **15**, **16** make the slider more sensitive to crown. The placement of the side ABSs **15**, **16** has an affect on overall flying height. The closer these pads are to the trailing edge of the slider, the more load-bearing they become resulting in a higher flying height. In addition, the two side ABSs contribute in determining the overall flying height sensitivity to the changes in altitude for the disk drive.

Based on the above, it can be seen that control of the placement and dimensions of the trailing ABS **17** and the side ABSs **15**, **16** can be used to control the effect on the flying height of the slider due to camber and crown. The amount of camber and crown that will be seen in a slider is directly related to the operating environment for the slider. Referring to FIG. **5**, a side view of a head gimbal assembly

40 is shown. In FIG. 5, a slider 10 is coupled to a flexure 42 via an epoxy 41. In this embodiment the epoxy is a combination of a standard epoxy and a conductive epoxy (e.g., a silver epoxy). The conductive epoxy forms a conductive path between the slider and the suspension. Due to the mismatch in the thermal expansion of the slider 10, epoxy 41 and the suspension material (typically made of stainless steel), changes in temperature cause changes to the slider profile (i.e., crown and camber).

At cold temperatures (e.g., 5° C.), crown and camber increase due to contraction of the flexure 42 material. At hotter temperatures (e.g., 60° C.), crown and camber decrease due to expansion of the flexure material. The effects on the flying height of the slider due to crown and camber are opposite to each other. As crown increases, the flying height for the slider increases, while increases in camber cause the flying height of the slider to decrease. Accordingly, the dimensions and placement of side ABSs 15 and 16 and the trailing ABS 17 can be controlled so that the flying height sensitivity of the slider to crown and camber can be made approximately equal to each other over a range of temperatures. In other words, at colder temperatures, the flying height increase of the slider that would be caused by the increase in crown is offset by the decrease in flying height of the slider that would be caused by the increase in camber. At higher temperatures, the flying height decrease of the slider that would be caused by the decrease in crown is offset by the increase in flying height that would be caused by the decrease in camber.

One potential requirement of an ultra-low flying height is that there be little to no change in flying height with change in altitude. Flying height change due to altitude change is highly correlated to the sub-ambient pressure region generated in the slider body. Referring back to FIG. 3, the sub-ambient pressure region exists between the low-profile bars 22*a* and 22*b*. In prior art designs, the sub-ambient pressure region is typically contained within side ABS rails. Accordingly, to reduce the subambient pressure area, the ABS rails would need to be expanded or moved, greatly affecting flying height. According to an embodiment of the present invention, the height of the low-profile bars 22*a* and 22*b* and their widths are selected so as not to provide air bearing surfaces, but still be sufficient to create a sub-ambient pressure region. In this example, the widths of the low-profile bars 22*a* and 22*b* are each set to ~~30 mils~~. Alternatively, their widths may be set to the photolithographic tolerances of manufacture as with the trailing edge ABS portion 19. Since the low profile bars are not air bearing surfaces, they need not be placed towards the side edges of the slider body, but instead can be moved inward towards the center of the slider body to reduce the suction force provided by the sub-ambient pressure area.

30 micrometers

Referring to FIGS. 6*a* and 6*b*, additional embodiments of the present invention are shown. In FIG. 6*a*, the side ABSs 15, 16 are moved farther towards the trailing edge of the slider. Since the side ABSs are moved farther towards the trailing edge, these ABSs bear more load resulting in an increase in flying height for the slider. Also, the rear ABS 17 is made narrower, while the second rectangular section 19 is made wider when compared with the same structure in FIG. 3. The rear ABS 17 also includes a secondary structure 17*b* at the same height as the secondary structure 17*a* at the leading edge of the trailing ABS. Finally, the low-profile members 22*a*, 22*b* have been moved outward to increase the sub-ambient pressure area. As demonstrated in FIG. 6*a*, the sensitivity of the slider to camber has been increased when compared to FIG. 3 because of the side ABSs have been moved toward the trailing edge of the slider. Because the dimension of the side ABSs and the dimensions of the first section of the trailing ABS have not changed, the sensitivity of the slider to crown has not appreciably changed, thus demonstrating an example of how sensitivity to one parameter can be changed without affecting change in another parameter. In the example of FIG. 6*a*, once the camber/crown sensitivity is set, the overall flying height of the slider can be set independently via setting the separation of the low-profile bars and setting the width of the second rectangular section of the trailing ABS.

Referring to FIG. 6*b*, the slider design is changed again. In FIG. 6*b*, the leading ABS 14 includes a second portion 14*a* extending in a leading direction from the ABS and a third portion 14*b* extending in a trailing direction from the ABS. The third portion works to break up the sub-ambient pressure region subtended by the low-profile members 22*a*, 22*b*. The side ABSs 15, 16 are made narrower from the leading edge to the trailing edge resulting in a decrease in crown sensitivity. Once crown and camber sensitivity have been set, the overall flying height can be set by controlling the width of the second rectangular portion 19 of the trailing ABS 17 (e.g., by making it wider). Also, in this embodiment, the side ABSs 15, 16 and trailing ABS 17 include extensions 15*c*, 16*c*, 17*c* towards the leading edge of the slider. These extensions provide additional pressurization when the slider as at the inner diameters of the moving disc.

While the present invention has been described with reference to the aforementioned applications, this description of the preferred embodiments is not meant to be construed in a limiting sense. It shall be understood that all aspects of the present invention are not limited to the specific depictions, configurations or dimensions set forth herein which depend upon a variety of aerodynamic principles and variables, and may be determined, for example, through computer simulation procedures using computer simulation programs such as that developed at the Computer Mechanics Laboratory at the University of California, Berkeley, Calif. Various modifications in form and detail of the disclosed apparatus, as well as other variations of the present invention, will be apparent to a person skilled in the art upon reference to the present disclosure. It is therefore contemplated that the appended claims shall cover any such modifications or variations of the described embodiments as falling within the true spirit and scope of the present invention.

What is claimed is:

1. A subambient pressure air bearing slider comprising:

a slider body defined by a leading edge, an inner and outer edge extending longitudinally along the slider body, and a trailing edge, said slider body including

a leading air bearing surface;

a leading portion extending from the leading edge of the slider, said leading portion having a first height lower than a height of said leading air bearing surface; and

a subambient pressure region extending between the leading portion and between first and second low-profile members, said low-profile members having a height that is less than the height of said leading air bearing surface wherein a width of a side air bearing surface in a latitudinal direction of the slider is selected to reduce the flying height's sensitivity to changes in camber.

2. The subambient pressure air bearing slider of claim 1 wherein the height of said first and second low-profile members is equal to said first height.

SEP 26 2007

3. The subambient pressure air bearing slider of claim 2 wherein said slider is to be used in an ultra low flying height environment for a disk drive.

4. The subambient pressure air bearing slider of claim 1 further comprising:

a trailing air bearing surface including a first rectangular portion facing the leading edge of said slider and a second rectangular portion facing the trailing edge of said slider.

5. The subambient pressure air bearing slider of claim 4 wherein said second rectangular portion has a width of less than approximately ~~30 mils.~~ 30 microns.

6. The subambient pressure air bearing slider of claim 5 wherein said second rectangular portions has a width of approximately 5 mils.

7. The subambient pressure air bearing slider of claim 4 wherein a width of said second rectangular portion is limited to mask alignment tolerances in photolithographic process to manufacture said slider.

8. The subambient pressure air bearing slider of claim 4 further comprising:

a read/write element, wherein said second rectangular portion is disposed over said read/write element.

9. A subambient pressure air bearing slider comprising:

a slider body defined by a leading edge, an inner and outer edge extending longitudinally along the slider body, and a trailing edge, said slider body including

a leading air bearing surface;

a leading portion extending from the leading edge of the slider, said leading portion having a first height lower than a height of said leading air bearing surface;

a subambient pressure region extending between the leading portion and between first and second low-profile members, said low-profile members having a height that is less than the height of said leading air bearing surface; and

at least one side air bearing surface, wherein a placement of said side air bearing surface and a width of said side air bearing surface in the longitudinal direction of the slider are selected to reduce the flying height's sensitivity to changes in crowing.

10. The subambient pressure air bearing slider of claim 9 wherein the height of said first and second low-profile members is equal to said first height.

11. The subambient pressure air bearing slider of claim 10 wherein said silder is to be used in an ultra low flying height environment for a disk drive.

12. The subambient pressure air bearing slider of claim 9 further comprising:

a trailing air bearing surface including a first rectangular portion facing the leading edge of said slider and a second rectangular portion facing the trailing edge of said slider.

13. The subambient pressure air bearing slider of claim 12 wherein said second rectangular portion has a width of less than approximately ~~30 mils.~~ 30 microns.

14. The subambient pressure air bearing slider of claim 13 wherein said second rectangular portions has a width of approximately 5 mils.

15. The subambient pressure air bearing slider of claim 12 wherein a width of said second rectangular portion is limited to mask alignment tolerances in photolithographic process to manufacture said slider.

16. The subambient pressure air bearing slider of claim 12 further comprising:

a read/write element, wherein said second rectangular portion is disposed over said read/write element.

17. The subambient pressure air bearing slider of claim 9 wherein said low-profile members are not air bearing surfaces.

18. A method of designing a subambient pressure air bearing slider including a slider body defined by a leading edge, an inner and outer edge extending longitudinally along the slider body, and a trailing edge, said slider body including a leading air bearing surface and a leading portion extending from the leading edge of the slider, said leading portion having a first height lower than a height of said leading air bearing surface, the method comprising:

selecting a width, in a longitudinal direction for the slider body, of a side air bearing surface and a position for said side air bearing slider to reduce the flying height's sensitivity to changes in crowning.

19. The method of claim 18 wherein said selecting operation further comprises selecting a width, in the longitudinal direction for the slider body, of a trailing air bearing surface to reduce flying height sensitivity to crowning in the slider.

20. The method of claim 19 further comprising:

selecting a width, in a lateral direction for the slider body, of said side air bearing surface to achieve a predetermined flying height sensitivity to camber in the slider.

21. The method of claim 20 wherein said flying height sensitivities to crown and camber offset each other for the slider.

22. The method of claim 20 further comprising:

positioning two low-profile members behind said leading air bearing surface and said leading portion to define a subambient pressure region.

23. The method of claim 22 wherein said trailing air bearing surface includes a leading rectangular portion and a trailing rectangular portion, the method further comprising:

selecting a width, in the lateral direction for the slider body, of said trailing rectangular portion of the trailing air bearing surface to achieve a desired flying height for said slider.

* * * * *

UNITED STATES PATENT AND TRADEMARK OFFICE

Commissioner for Patents
United States Patent and Trademark Office
P.O. Box 1450
Alexandria, VA 22313-1450
www.uspto.gov

ROBERT T. SPAULDING
550 ELINOR DR.
FULLERTON, CA 92835

COPY MAILED

AUG 09 2006

OFFICE OF PETITIONS

In re Application of	:	
Kip Kilburn et al	:	
Application No. 10/614,250	:	ON PETITION
Filed: July 8, 2003	:	
Attorney Docket No.	:	

This is a decision on the petition under 37 CFR 1.137(b), filed March 14, 2006, to revive the above-identified application.

The petition is **GRANTED**.

The above-identified application became abandoned for failure to reply in a timely manner to the Office action mailed March 4, 2005, which set a shortened statutory period for reply of one (1) month or thirty (30) days (whichever is later). No extensions of time under the provisions of 37 CFR 1.136(a) were obtained. Accordingly, the above-identified application became abandoned on April 5, 2005.

Telephone inquiries concerning this decision should be directed to Irvin Dingle at (571) 272-3210.

This matter is being referred to Technology Center AU 3616 for further processing.

Irvin Dingle
Petitions Examiner
Office of Petitions

UNITED STATES PATENT AND TRADEMARK OFFICE

COMMISSIONER FOR PATENTS
UNITED STATES PATENT AND TRADEMARK OFFICE
P.O. BOX 1450
ALEXANDRIA, VA 22313-1450
www.uspto.gov

MAILED

APR 0 6 2004

Office of the Director
Group 2000

VU XUAN MINH
24 Ngo 231 Pho Kham Thien
Hanoi VN VIET NAM

In re application of	:	**DECISION ON PETITION**
Vu Xuan Minh	:	**TO MAKE SPECIAL**
Application No. 10/614,274	:	**(ACCELERATED**
Filed: July 8, 2003	:	**EXAMINATION)**
For: MOBILE OBJECT WITH FORCE GENERATIONS		

This is in response to the petition filed on July 8, 2003 to make the above-identified application special on the basis of special examining procedure for certain new applications - accelerated examination as set forth in MPEP § 708.02 VIII. The delay in acting on this petition is regretted.

The petition is **DISMISSED**.

The requirements for granting special status under this section are: (A) a petition to make special accompanied by the fee set forth in 37 CFR 1.17(i); (B) all claims being directed to a single invention, or an election without traverse if the Office determines that all the claims are not directed to a single invention; (C) a statement that a pre-examination search was made listing the field of search; (D) one copy of each of the references deemed most closely related to the subject matter encompassed by the claims if said references are not already of record; and (E) a detailed discussion of how the claimed subject matter is patentable over the references in accordance with 37 CFR 1.111 (b) and (c).

The petition fails to meet requirements (C)-(E) above.

The petition does not include: a statement that a pre-examination search was made listing the field of search; one copy of each of the references deemed most closely related to the subject matter encompassed by the claims if said references are not already of record; and a detailed discussion of how the claimed subject matter is patentable over the references in accordance with 37 CFR 1.111 (b) and (c). Any renewed petition to make special must include these requirements.

SUMMARY: Petition to Make Special **DISMISSED**.

Petitioner is given one more opportunity to perfect the petition. Any request for reconsideration must be filed within TWO MONTHS of the date of this decision. Extensions of time under 37 CFR 1.136(a) are permitted.

Applicant should promptly submit a renewed petition to the Commissioner of Patents and Trademarks, Washington, D.C. 20231. The envelope should indicate that the correspondence be brought to the attention of Technology Center 3600.

Until the renewed petition is submitted, the application will be returned to the examiner's docket to await treatment on the merits in the normal order of examination.

Steven N. Meyers
Special Programs Examiner
Technology Center 3600
(703) 308-3868

SNM/mjz: 3/30/04

UNITED STATES PATENT AND TRADEMARK OFFICE

Commissioner for Patents
United States Patent and Trademark Office
P.O. Box 1450
Alexandria, VA 22313-1450
www.uspto.gov

OLIFF & BERRIDGE, PLC
P.O. BOX 19928
ALEXANDRIA, VA 22320

COPY MAILED
AUG 0 9 2004
OFFICE OF PETITIONS

In re Application of :
Shinji Kouda et al :
Application No. 10/614,278 :
Filed: July 8, 2003 :
Attorney Docket No. 116460 :

ON PETITION

This is a decision on the petition under 37 CFR 1.313(c), filed August 9, 2004, which is being treated under 37 CFR 1.313(c)(2) to withdraw the above-identified application from issue after payment of the issue fee.

The petition is **GRANTED**.

The above-identified application is withdrawn from issue for consideration of a submission under 37 CFR 1.114 (request for continued examination). See 37 CFR 1.313(c)(2).

Petitioner is advised that the issue fee paid on June 29, 2004 in the above-identified application cannot be refunded. If, however, the above-identified application is again allowed, petitioner may request that it be applied towards the issue fee required by the new Notice of Allowance.[1]

Telephone inquiries should be directed to Wan Laymon at (703) 306-5685.

This matter is being referred to Technology Center AU 2834 for processing of the request for continued examination under 37 CFR 1.114 and for consideration of the concurrently filed Amendment.

Wan Laymon
Petitions Examiner
Office of Petitions
Office of the Deputy Commissioner
for Patent Examination Policy

---

[1] The request to apply the issue fee to the new Notice may be satisfied by completing and returning the new Issue Fee Transmittal Form PTOL-85(b), which includes the following language thereon: "Commissioner for Patents is requested to apply the Issue Fee and Publication Fee (if any) or re-apply any previously paid issue fee to the application identified above." Petitioner is advised that, whether a fee is indicated as being due or not, the Issue Fee Transmittal Form **must** be completed and timely submitted to avoid abandonment. Note the language in bold text on the first page of the Notice of Allowance and Fee(s) Due (PTOL-85).

UNITED STATES PATENT AND TRADEMARK OFFICE

Commissioner for Patents
United States Patent and Trademark Office
P.O. Box 1450
Alexandria, VA 22313-1450
www.uspto.gov

COOPER CAMERON CORPORATION
P.O. BOX 1212
HOUSTON, TX 77251-1212

COPY MAILED

FEB 25 2008

OFFICE OF PETITIONS

In re Application of :
Dennis P. Nguyen, et. al. :
Application No. 10/614,286 :
Filed: July 7, 2003 :
Attorney Docket No. OTD-030487-US :

ON PETITION

This is a decision on the petition under 37 CFR 1.137(b), filed on August 27, 2007, to revive the above-identified application.

The application became abandoned for failure to respond to the Notice of Allowability mailed April 18, 2007. A Notice of Abandonment was mailed on August 14, 2007.

It is not apparent whether the person signing the instant petition was ever given a power of attorney or authorization of agent to prosecute the above-identified application. However, in accordance with 37 CFR 1.34(a), the signature of Manish Vyas appearing on the petition shall constitute a representation to the United States Patent and Trademark Office that he is authorized to represent the particular party in whose behalf he acts.

The petition satisfies the requirements of 37 CFR 1.137(b), in that, petitioner has supplied (1) the reply in the form of eleven (11) sheets of replacement drawings containing Figures 1-12; (2) the petition fee of $1,500; and (3) a proper statement of unintentional delay. Therefore, the petition is **GRANTED**.

This application file is being referred to the Office of Data Management to be processed into a patent.

Telephone inquiries concerning this decision should be directed to the undersigned at (571) 272-3226.

Andrea Smith
Petitions Examiner
Office of Petitions

UNITED STATES PATENT AND TRADEMARK OFFICE

COMMISSIONER FOR PATENTS
UNITED STATES PATENT AND TRADEMARK OFFICE
P.O. BOX 1450
ALEXANDRIA, VA 22313-1450
www.uspto.gov

MAIL

JUL 1 8 2005

DIRECTOR OFFICE
TECHNOLOGY CENTER 2100

CAMPBELL STEPHENSON ASCOLESE, LLP
4807 Spicewood Springs RD.
BLDG, 4, Suite 201
Austin, TX 78759

In re Application of:
Oleg KISELEV
Application No. 10/614,306
Filed: July 3, 2003
For: APPLICATION-ASSISTED RECOVERING FROM DATA CORRUPTION IN PARITY RAID STORAGE USING SUCCESSIVE RE-READS

DECISION ON PETITION TO MAKE SPECIAL

This is a decision on the petition, filed on May 14, 2004 under 37 C.F.R. §102(d) and M.P.E.P. § 708.02(VIII): Accelerated Examination, to make the above-identified application special.

The petition is **GRANTED**.

M.P.E.P. § 708.02, Section VIII which sets out the prerequisites for a grantable petition for Accelerated Examination under 37 C.F.R. § 102(d) states in relevant part:

> A new application (one which has not received any examination by the examiner) may be granted special status provided that applicant (and this term includes applicant's attorney or agent) complies with each of the following items:
>
> (A) Submits a petition to make special accompanied by the fee set forth in 37 CFR 1.17(h);
>
> (B) Presents all claims directed to a single invention, or if the Office determines that all the claims presented are not obviously directed to a single invention, will make an election without traverse as a prerequisite to the grant of special status;
>
> (C) Submits a statement(s) that a pre-examination search was made, listing the field of search by class and subclass, publication, Chemical Abstracts, foreign patents, etc. A search made by a foreign patent office satisfies this requirement;
>
> (D) Submits one copy each of the references deemed most closely related to the subject matter encompassed by the claims if said references are not already of record; and
>
> (E) Submits a detailed discussion of the references, which discussion points out, with the particularity required by 37 CFR 1.111 (b) and (c), how the claimed subject matter is patentable over the references.

> In those instances where the request for this special status does not meet all the prerequisites set forth above, applicant will be notified and the defects in the request will be stated. The application will remain in the status of a new application awaiting action in its regular turn. In those instances where a request is defective in one or more respects, applicant will be given one opportunity to perfect the request in a renewed petition to make special. If perfected, the request will then be granted. If not perfected in the first renewed petition, any additional renewed petitions to make special may or may not be considered at the discretion of the Group Special Program Examiner.

Applicant's submission of May 14, 2004 meets all the criteria set out above. Accordingly, the petition is **GRANTED**. The application file is being forwarded to the Examiner for accelerated examination in accordance with M.P.E.P. § 708.02. If the application is subsequently allowed, it will be given priority for printing. See M.P.E.P. § 1309.

Vincent N. Trans
Special Program Examiner
Technology Center 2100
Computer Architecture, Software, and
Information Security
571-272-3613

UNITED STATES PATENT and TRADEMARK OFFICE
UNDER SECRETARY OF COMMERCE FOR INTELLECTUAL PROPERTY AND
DIRECTOR OF THE UNITED STATES PATENT AND TRADEMARK OFFICE
WASHINGTON, D.C. 20231
WWW.USPTO.GOV

caf

10-5-07

In re application of	:	
KUKULKA et al.	:	DECISION ON
Serial No. 10/614,310	:	PETITION
Filed: July 7, 2003	:	
For: SOLAR CELL STRUCTURE WITH SOLAR	:	
CELLS HAVING REVERSE-BIAS PROTECTION	:	
USING AN IMPLANTED CURRENT SHUNT	:	

This is a decision on the PETITION under 37 CFR 1.144 filed August 29, 2007 to withdraw the restriction requirement mailed November 14, 2006 and made final in the office action mailed June 5, 2007.

On November 14, 2006, a two-way restriction requirement was made by the examiner. The groups of claims as set forth in the requirement were directed to an article and a method. Applicants traversed the restriction requirement in a response filed March 13, 2007 by stating that the reasons supplied by the examiner to show distinctness of the groups was improper. The examiner prepared an office action based on the elected group and made the restriction requirement final. This office action was mailed June 5, 2007.

On August 29, 2007, the instant petition under 37 CFR 1.144 was filed to formally request the withdrawal of the restriction requirement.

Applicant's position for the withdrawal of the restriction requirement is that the examiner has not shown that (1) the product can be made by a materially different process and (2) the separate groups are "independent and distinct".

DECISION

Section 803 of the MPEP states:

> 803 Restriction - When Proper
> Under the statute an application may properly be required to be restricted to one of two or more claimed inventions only if they are able to support separate pat-ents and they are either independent (MPEP § 806.04 - § 806.04(i)) or distinct (MPEP § 806.05 - §806.05(i)). If the search and examination of an entire application can be made without serious burden, the examiner must examine it on the merits, even though it includes claims to independent or distinct inventions.
>
> CRITERIA FOR RESTRICTION BETWEEN PATENTABLY DISTINCT INVENTIONS
> There are two criteria for a proper requirement for restriction between patentably distinct inventions:

(A) The inventions must be independent (see MPEP § 802.01, § 806.04,§ 808.01) or distinct as claimed (see MPEP § 806.05 - § 806.05(i)); and
(B) There must be a serious burden on the examiner if restriction is required (see MPEP § 803.02, § 806.04(a) - § 806.04(i), § 808.01(a), and § 808.02).

In the restriction requirement mailed on November 14, 2006, the examiner required restriction between I. an article and, II. a method. It was argued that inventions I and II are distinct because the article as claimed can be made by materially different methods such as electroplating.

In the response to the restriction requirement, Applicants argued that the examples cited by the examiner to show distinctness fail to meet the burden required for such a showing. It was argued specifically that the instant method claims clearly encompass an embodiment wherein the depositing can be done by electroplating

In response to Applicant's arguments, the examiner in the office action mailed June 5, 2007, maintained the restriction requirement and stated "This is not found persuasive because there is nothing in claim 8 mentioning about electroplating. The term "depositing" can be CVD (Chemical Vapor Deposition) or PVD (Physical Vapor Deposition), therefore it would be a serious burden on the Examiner to search for all the methods involving "depositing" ".

Applicants had set forth clear and persuasive arguments showing why the requirement was in fact in error. The fact that the claims would encompass the examples provided by the examiner demonstrate that the claims are not in fact distinct for the reasons given by the examiner. The examiner's argument that claim 8 does not mention electroplating is not persuasive because the claim generically recites depositing. Electroplating is a species of the generic depositing limitation. Because the examiner has not shown that the groups of claims are independent and distinct, the restriction requirement is not proper.

Accordingly, the petition for withdrawal of the restriction requirement is **GRANTED.**

The application is being forwarded to the examiner to prepare a new non-final office action which includes examination and action on the merits of the claims previously withdrawn from consideration due to the restriction requirement.

Jacqueline M. Stone

Jacqueline Stone, Director
Technology Center 1700
Chemical and Materials Engineering

Carmen Santa Maria
McNees Wallace & Nurick LLC
100 Pine Street
P.O. Box 1166
Harrisburg PA 17108-1166

UNITED STATES PATENT AND TRADEMARK OFFICE

COMMISSIONER FOR PATENTS
UNITED STATES PATENT AND TRADEMARK OFFICE
P.O. BOX 1450
ALEXANDRIA, VA 22313-1450
www.uspto.gov

JUN - 3 2004

FOLEY AND LARDNER
SUITE 500
3000 K STREET NW
WASHINGTON DC 20007

In re Application of Linda D. Artman et al Serial No.: 10/614,344 Filed: July 8, 2003 Attorney Docket No.: 085747-0245	PETITION TO MAKE SPECIAL

This is in response to applicants' petition filed February 27, 2004, to make the above-identified application special under the provisions of 37 CFR 1.102(d). The delay in acting on this petition is regretted.

Applicant has satisfied the provisions set forth in M.P.E.P. 708.02, XII. Therefor the petition is **GRANTED**.

Should there be any questions with regard to this letter please contact William R. Dixon, Jr. by letter addressed to the Director, Technology Center 1600, P.O. Box 1450, Alexandria, VA 22313-1450, or by telephone at 571-272-0519 or by facsimile transmission at 703-872-9306.

William R. Dixon, Jr.
Special Program Examiner
Technology Center 1600

UNITED STATES PATENT AND TRADEMARK OFFICE

Commissioner for Patents
United States Patent and Trademark Office
P.O. Box 1450
Alexandria, VA 22313-1450
www.uspto.gov

FOLEY AND LARDNER
SUITE 500
3000 K STREET NW
WASHINGTON DC 20007

COPY MAILED
MAY 0 8 2006
OFFICE OF PETITIONS

In re Application of Linda D. Artman et al Application No. 10/614,344 Filed: July 8, 2003 Attorney Docket No. 1950-7467.1US (N-405US-DIV)	: : : : : :	DECISION ON PETITION TO WITHDRAW FROM RECORD

This is a decision on the Request to Withdraw as attorney or agent of record under 37 C.F.R. § 1.36(b), filed September 26, 2005.

The petition is **NOT APPROVED**.

A review of the file record indicates that the power of attorney appearing in the oath filed on July 8, 2003, to Stephen A. Bent, along with all of the other attorneys associated with the law firm of Foley & Lardner (Customer No. 22428), has been revoked by the assignee of the patent application. Accordingly, the request to withdraw under 37 C.F.R. §1.36(b) is **moot**.

All future communications from the Office will be directed to the below-listed address of record until otherwise notified by applicant.

This application is being referred to Technology Center AU 1617 to consider the Request for Continued Examination (RCE) filed April 21, 2006.

Telephone inquiries concerning this decision should be directed to Karen Creasy at 571-272- 3208.

Amella Au
Petitions Examiner
Office of Petitions

cc:

EDGAR R. CATAXINOS
TRASKBRITT
P.O. BOX 2550
SALT LAKE CITY, UTAH 84110

UNITED STATES PATENT AND TRADEMARK OFFICE

COMMISSIONER FOR PATENTS
UNITED STATES PATENT AND TRADEMARK OFFICE
P.O. BOX 1450
ALEXANDRIA, VA 22313-1450
www.uspto.gov

Paper No.

Philip W. Marsh
COOLEY GODWARD LLP
Att: Patent Group
One Freedom Square
Reston Town Center
11951 Freedom Drive
Reston, VA 20190-5656

MAILED

JUN 2 5 2005

Technology Center 2100

In re Application of:
Gregory A. Becker et al.
Application No. 10/614,347
Filed: July 8, 2003
For: SYSTEM AND METHOD FOR BACKING UP A COMPUTER SYSTEM

DECISION ON REQUEST TO WITHDRAW AS ATTORNEY OR AGENT

This is a decision on the Request To Withdraw from Representation filed April 14, 2005.

A grantable request to withdraw as attorney of record should indicate thereon the present mailing addresses of the attorney(s) who is/are withdrawing from the record and of the applicant. The request for withdrawal must be signed by every attorney seeking to withdraw or contain a clear indication that one attorney is signing on behalf of another/others. A request to withdraw will not be approved unless at least 30 (thirty) days would remain between the date of approval and the later of the expiration date of a time to file a response or the expiration date of the maximum time period which can be extended under 37 C.F.R. § 1. 136(a). The effective date of withdrawal being the date of decision and not the date of request. See M.P.E.P. § 402.06. 37 C.F.R. § 1.36 further requires that the applicant or patent owner be notified of the withdrawal of the attorney or agent.

The request filed April 14, 2005 meets all the requirements. Accordingly the request is **GRANTED**.

All future communications from the Office will be directed to the below-listed address until otherwise notified by applicant. This correspondence address is provided by the withdrawn attorney(s). Applicant is reminded of the obligation to promptly notify the

Patent and Trademark Office (Office) of any change in correspondence address to ensure receipt of all communications from the Office.

James R. Matthews

for Vincent N. Trans
Special Program Examiner
Technology Center 2100
Computer Architecture, Software, and
Information Security
(571) 272-3613

cc: Balaji Narashimban
MENDOCINO SOFTWARE
4700 Benicia Street
Fremont, CA 94538

UNITED STATES PATENT AND TRADEMARK OFFICE

COMMISSIONER FOR PATENTS
UNITED STATES PATENT AND TRADEMARK OFFICE
P.O. BOX 1450
ALEXANDRIA, VA 22313-1450
www.uspto.gov

BALAJI NARASIMHAN
MENDOCINO SOFTWARE
47001 BENICIA STREET
FREMONT, CA 94538

MAILED

DEC 14 2005

TECHNOLOGY CENTER 2100

In re Application of BECKER et al	:	
Application No.: 10/614,347	:	DECISION ON PETITION
Filing Date: July 8, 2003	:	FOR ACCELERATED
For: SYSTEM AND METHOD FOR	:	EXAMINATION UNDER
BACKING UP A COMPUTER SYSTEM	:	M.P.E.P. §708.02(VIII)
	:	

This is a decision on the petition filed November 14, 2005 under 37 CFR §1.102(d) and M.P.E.P. §708.02(VIII): Accelerated Examination, to make the above-identified application special.

The petition is **DISMISSED**.

M.P.E.P. §708.02, Section VIII, which sets out the prerequisites for a grantable petition for Accelerated Examination under 37 CFR §1.102(d), states in relevant part:

> A new application (one which has not received any examination by the examiner) may be granted special status provided that applicant (and this term includes applicant's attorney or agent) complies with each of the following items:
>
> (A) Submits a petition to make special accompanied by the fee set forth in 37 CFR 1.17(h);
>
> (B) Presents all claims directed to a single invention, or if the Office determines that all the claims presented are not obviously directed to a single invention, will make an election without traverse as a prerequisite to the grant of special status. The election may be made by applicant at the time of filing the petition for special status. Should applicant fail to include an election with the original papers or petition and the Office determines that a requirement should be made, the established telephone restriction practice will be followed. If otherwise proper, examination on the merits will proceed on claims drawn to the elected invention. If applicant refuses to make an election without traverse, the application will not be further examined at that time. The petition will be denied on the ground that the claims are not directed to a single invention, and the application will await action in its regular turn. Divisional applications directed to the nonelected inventions will not automatically be given special status based on papers filed with the petition in the parent application. Each such application must meet on its own all requirements for the new special status;

(C) Submits a statement(s) that a pre-examination search was made, listing the field of search by class and subclass, publication, Chemical Abstracts, foreign patents, etc. >The pre-examination search must be directed to the invention as claimed in the application for which special status is requested.< A search made by a foreign patent.office satisfies this requirement >if the claims in the corresponding foreign application are of the same or similar scope to the claims in the U.S. application for which special status is requested<;

(D) Submits one copy each of the references deemed most closely related to the subject matter encompassed by the claims if said references are not already of record; and

(E) Submits a detailed discussion of the references, which discussion points out, with the particularity required by 37 CFR 1.111 (b) and (c), how the claimed subject matter is patentable over the references.

With respect to requirement (E), the petition does not contain a detailed discussion of the references to the extent required by 37 CFR 1.111(b) and (c). The discussion must point out how the claimed subject matter in each of the independent claims is patentable over the each of the cited references. While the petition adequately distinguishes independent claims 1 and 20 from the cited references, the petition provides no discussion concerning independent claims 16 and 21 and the cited references.

Because the petition fails to satisfy all of the criteria set forth above, the petition to make special is **DISMISSED**.

Any request for reconsideration must be filed within TWO (2) MONTHS from the mailing date of this decision.

Pinchus M. Laufer
Special Programs Examiner
Technology Center 2100
Computer Architecture, Software, and Information Security
571-272-3599

UNITED STATES PATENT AND TRADEMARK OFFICE

Commissioner for Patents
United States Patent and Trademark Office
P.O. Box 1450
Alexandria, VA 22313-1450
www.uspto.gov

GEORGE J. MIAO
#A27
20400 VIA PAVISO
CUPERTINO CA 95014

COPY MAILED

JUN 30 2008

In re Application of
George J. Miao
Application No. 10/614,366
Filed: July 7, 2003
Attorney Docket No.

ON PETITION

This is a decision on the petition to withdraw the holding of abandonment, filed June 12, 2008.

The petition is **DISMISSED**.

The application became abandoned on December 21, 2007, after no response was received to the Notice of Allowance and Issue Fee Due mailed September 20, 2007, which set a statutory period for reply of three-months from its mailing date. No response was received within the allowable period, and the application became abandoned on December 21, 2007. A Notice of Abandonment was mailed January 16, 2008.

In the instant petition, petitioner maintains that the Notice of Allowance and Issue Fee Due was never received.

When, as in this case petitioner is arguing that an Office communication was not received, petitioner must establish non-receipt of the Office communication in accordance with section 711.03(c) of the *Manual of Patent Examining Procedure* that requires the following:

> [t]he showing requires to establish non-receipt of an Office communication must include a statement from the practitioner stating that the Office communication was not received by the practitioner and attesting to the fact that a search of the file jacket and docket records indicates that the Office communication was not received. A copy of the docket record where the non-received Office communication would have been entered had it been received and docketed must be attached to and referenced in practitioner's statement.

Petitioner must make a statement that petitioner's records where searched, but the Office communication was not found. Petitioner must also provide a copy of petitioner's logs showing where the Office communication would have been entered if it had been received. If petitioner does not keep a log, petitioner may file a copy of the contents of the incoming correspondence petitioner has received for this application. Petitioner may also file a copy of

any calendar notations petitioner maintains relative to this patent application that may corroborate petitioner's allegation that the notice was not received. This documentation must accompany any renewed petition filed under 37 CFR 1.181(a).

Alternatively, petitioner may revive the application based on unintentional abandonment under 37 CFR 1.137(b) (enclosed). A grantable petition pursuant to 37 CFR 1.137(b) must be accompanied by the required reply, the required petition fee ($1,540.00 for a large entity and $770.00 for a verified small entity), and a statement that the **entire** delay in filing the required reply from the due date for the reply until the filing of a grantable petition pursuant to 37 CFR 1.137(b) was unintentional.

Further correspondence with respect to this matter should be addressed as follows:

By mail: Commissioner for Patents
United States Patent and Trademark Office
Box 1450
Alexandria, VA 22313-1450

By facsimile: (571) 273-8300
Attn: Office of Petitions

Telephone inquiries concerning this decision should be directed to the undersigned (571) 272-3222.

Kenya A. McLaughlin
Petitions Attorney
Office of Petitions

Enclosure: Form PTO/SB/64

PTO/SB/64 (01-08)
Approved for use through 06/30/2008. OMB 0651-0031
U.S. Patent and Trademark Office; U.S. DEPARTMENT OF COMMERCE
Under the Paperwork Reduction Act of 1995, no persons are required to respond to a collection of information unless it displays a valid OMB control number.

PETITION FOR REVIVAL OF AN APPLICATION FOR PATENT ABANDONED UNINTENTIONALLY UNDER 37 CFR 1.137(b)

Docket Number (Optional)

First named inventor:

Application No.: Art Unit:

Filed: Examiner:

Title:

Attention: Office of Petitions
Mail Stop Petition
Commissioner for Patents
P.O. Box 1450
Alexandria, VA 22313-1450
FAX (571) 273-8300

NOTE: If information or assistance is needed in completing this form, please contact Petitions Information at (571) 272-3282.

The above-identified application became abandoned for failure to file a timely and proper reply to a notice or action by the United States Patent and Trademark Office. The date of abandonment is the day after the expiration date of the period set for reply in the office notice or action plus an extensions of time actually obtained.

APPLICANT HEREBY PETITIONS FOR REVIVAL OF THIS APPLICATION

NOTE: A grantable petition requires the following items:
(1) Petition fee;
(2) Reply and/or issue fee;
(3) Terminal disclaimer with disclaimer fee - required for all utility and plant applications filed before June 8, 1995; and for all design applications; and
(4) Statement that the entire delay was unintentional.

1. Petition fee

☐ Small entity-fee $ _____ (37 CFR 1.17(m)). Applicant claims small entity status. See 37 CFR 1.27.

☐ Other than small entity – fee $ _____ (37 CFR 1.17(m))

2. Reply and/or fee

A. The reply and/or fee to the above-noted Office action in the form of _____(identify type of reply):

☐ has been filed previously on _____.
☐ is enclosed herewith.

B. The issue fee and publication fee (if applicable) of $ _____.

☐ has been paid previously on _____.
☐ is enclosed herewith.

This collection of information is required by 37 CFR 1.137(b). The information is required to obtain or retain a benefit by the public which is to file (and by the USPTO to process) an application. Confidentiality is governed by 35 U.S.C. 122 and 37 CFR 1.11 and 1.14. This collection is estimated to take 1.0 hour to complete, including gathering, preparing, and submitting the completed application form to the USPTO. Time will vary depending upon the individual case. Any comments on the amount of time you require to complete this form and/or suggestions for reducing this burden, should be sent to the Chief Information Officer, U.S. Patent and Trademark Office, U.S. Department of Commerce, P.O. Box 1450, Alexandria, VA 22313-1450. DO NOT SEND FEES OR COMPLETED FORMS TO THIS ADDRESS. **SEND TO: Mail Stop Petition, Commissioner for Patents, P.O. Box 1450, Alexandria, VA 22313-1450.**

If you need assistance in completing the form, call 1-800-PTO-9199 and select option 2.

Under the Paperwork Reduction Act of 1995, no persons are required to respond to a collection of information unless it displays a valid OMB control number.

3. Terminal disclaimer with disclaimer fee

☐ Since this utility/plant application was filed on or after June 8, 1995, no terminal disclaimer is required.

☐ A terminal disclaimer (and disclaimer fee (37 CFR 1.20(d)) of $ _____ for a small entity or $ _____ for other than a small entity) disclaiming the required period of time is enclosed herewith (see PTO/SB/63).

4. STATEMENT: The entire delay in filing the required reply from the due date for the required reply until the filing of a grantable petition under 37 CFR 1.137(b) was unintentional. [NOTE: The United States Patent and Trademark Office may require additional information if there is a question as to whether either the abandonment or the delay in filing a petition under 37 CFR 1.137(b) was unintentional (MPEP 711.03(c), subsections (III)(C) and (D)).]

WARNING:

Petitioner/applicant is cautioned to avoid submitting personal information in documents filed in a patent application that may contribute to identity theft. Personal information such as social security numbers, bank account numbers, or credit card numbers (other than a check or credit card authorization form PTO-2038 submitted for payment purposes) is never required by the USPTO to support a petition or an application. If this type of personal information is included in documents submitted to the USPTO, petitioners/applicants should consider redacting such personal information from the documents before submitting them to the USPTO. Petitioner/applicant is advised that the record of a patent application is available to the public after publication of the application (unless a non-publication request in compliance with 37 CFR 1.213(a) is made in the application) or issuance of a patent. Furthermore, the record from an abandoned application may also be available to the public if the application is referenced in a published application or an issued patent (see 37 CFR 1.14). Checks and credit card authorization forms PTO-2038 submitted for payment purposes are not retained in the application file and therefore are not publicly available.

Signature	Date
Typed or printed name	Registration Number, if applicable
Address	Telephone Number
Address	

Enclosures:
- ☐ Fee Payment
- ☐ Reply
- ☐ Terminal Disclaimer Form
- ☐ Additional sheets containing statements establishing unintentional delay
- ☐ Other: _____

CERTIFICATE OF MAILING OR TRANSMISSION [37 CFR 1.8(a)]

I hereby certify that this correspondence is being:

☐ Deposited with the United States Postal Service on the date shown below with sufficient postage as first class mail in an envelope addressed to: Mail Stop Petition, Commissioner for Patents, P. O. Box 1450, Alexandria, VA 22313-1450.

☐ Transmitted by facsimile on the date shown below to the United States Patent and Trademark Office at (571) 273-8300.

Date	Signature
	Typed or printed name of person signing certificate

Privacy Act Statement

The **Privacy Act of 1974 (P.L. 93-579)** requires that you be given certain information in connection with your submission of the attached form related to a patent application or patent. Accordingly, pursuant to the requirements of the Act, please be advised that: (1) the general authority for the collection of this information is 35 U.S.C. 2(b)(2); (2) furnishing of the information solicited is voluntary; and (3) the principal purpose for which the information is used by the U.S. Patent and Trademark Office is to process and/or examine your submission related to a patent application or patent. If you do not furnish the requested information, the U.S. Patent and Trademark Office may not be able to process and/or examine your submission, which may result in termination of proceedings or abandonment of the application or expiration of the patent.

The information provided by you in this form will be subject to the following routine uses:

1. The information on this form will be treated confidentially to the extent allowed under the Freedom of Information Act (5 U.S.C. 552) and the Privacy Act (5 U.S.C 552a). Records from this system of records may be disclosed to the Department of Justice to determine whether disclosure of these records is required by the Freedom of Information Act.
2. A record from this system of records may be disclosed, as a routine use, in the course of presenting evidence to a court, magistrate, or administrative tribunal, including disclosures to opposing counsel in the course of settlement negotiations.
3. A record in this system of records may be disclosed, as a routine use, to a Member of Congress submitting a request involving an individual, to whom the record pertains, when the individual has requested assistance from the Member with respect to the subject matter of the record.
4. A record in this system of records may be disclosed, as a routine use, to a contractor of the Agency having need for the information in order to perform a contract. Recipients of information shall be required to comply with the requirements of the Privacy Act of 1974, as amended, pursuant to 5 U.S.C. 552a(m).
5. A record related to an International Application filed under the Patent Cooperation Treaty in this system of records may be disclosed, as a routine use, to the International Bureau of the World Intellectual Property Organization, pursuant to the Patent Cooperation Treaty.
6. A record in this system of records may be disclosed, as a routine use, to another federal agency for purposes of National Security review (35 U.S.C. 181) and for review pursuant to the Atomic Energy Act (42 U.S.C. 218(c)).
7. A record from this system of records may be disclosed, as a routine use, to the Administrator, General Services, or his/her designee, during an inspection of records conducted by GSA as part of that agency's responsibility to recommend improvements in records management practices and programs, under authority of 44 U.S.C. 2904 and 2906. Such disclosure shall be made in accordance with the GSA regulations governing inspection of records for this purpose, and any other relevant (*i.e.*, GSA or Commerce) directive. Such disclosure shall not be used to make determinations about individuals.
8. A record from this system of records may be disclosed, as a routine use, to the public after either publication of the application pursuant to 35 U.S.C. 122(b) or issuance of a patent pursuant to 35 U.S.C. 151. Further, a record may be disclosed, subject to the limitations of 37 CFR 1.14, as a routine use, to the public if the record was filed in an application which became abandoned or in which the proceedings were terminated and which application is referenced by either a published application, an application open to public inspection or an issued patent.
9. A record from this system of records may be disclosed, as a routine use, to a Federal, State, or local law enforcement agency, if the USPTO becomes aware of a violation or potential violation of law or regulation.

UNITED STATES PATENT AND TRADEMARK OFFICE

Commissioner for Patents
United States Patent and Trademark Office
P.O. Box 1450
Alexandria, VA 22313-1450
www.uspto.gov

GEORGE J. MIAO
#A27
20400 VIA PAVISO
CUPERTINO CA 95014

COPY MAILED
SEP 02 2008

In re Application of	:	
George J. MIAO	:	
Application No. 10/614,366	:	DECISION ON PETITION
Filed: July 07, 2003	:	
Attorney Docket No.	:	

This is a decision on the petition under the unintentional provisions of 37 CFR 1.137(b), filed July 23, 2007, to revive the above-identified application.

The petition is **GRANTED**.

The application became abandoned for failure to timely pay the issue fees on or before December 20, 2007, as required by the Notice of Allowance and Fee(s) Due, mailed September 20, 2007, which set a statutory period for reply of three (3) months. Accordingly, the application became abandoned on December 21, 2007.

The petition satisfies the requirements of 37 CFR 1.137(b) in that petitioner has supplied (1) the reply in the form of payment of the issue fee of $720, (2) the petition fee of $770; and (3) a proper statement of unintentional delay. Accordingly, the Issue Fee payment is accepted as having been unintentionally delayed.

Telephone inquiries concerning this decision should be directed to Tredelle Jackson at (571) 272-2783.

This application is being referred to the Office of Data Management for processing.

Ramesh Krishnamurthy

Ramesh Krishnamurthy
Petitions Examiner
Office of Petitions

OIPE IAP66
JUL 2 3 2008
PATENT & TRADEMARK OFFICE

1Fm DAC/B

PTO/SB/64 (01-08)
Approved for use through 06/30/2008. OMB 0651-0031
U.S. Patent and Trademark Office; U.S. DEPARTMENT OF COMMERCE
Under the Paperwork Reduction Act of 1995, no persons are required to respond to a collection of information unless it displays a valid OMB control number.

PETITION FOR REVIVAL OF AN APPLICATION FOR PATENT ABANDONED UNINTENTIONALLY UNDER 37 CFR 1.137(b)

Docket Number (Optional)

First named inventor: GEORGE J. MIAO

Application No.: 10/614,366 Art Unit: 2611

Filed: July 7, 2003 Examiner: Joseph Francis A. Dsouza

Title: Spread Spectrum Based Multichannel Modulation for Ultra Wideband Communications

Attention: Office of Petitions
Mail Stop Petition
Commissioner for Patents
P.O. Box 1450
Alexandria, VA 22313-1450
FAX (571) 273-8300

NOTE: If information or assistance is needed in completing this form, please contact Petitions Information at (571) 272-3282.

The above-identified application became abandoned for failure to file a timely and proper reply to a notice or action by the United States Patent and Trademark Office. The date of abandonment is the day after the expiration date of the period set for reply in the office notice or action plus an extensions of time actually obtained.

APPLICANT HEREBY PETITIONS FOR REVIVAL OF THIS APPLICATION

NOTE: A grantable petition requires the following items:
(1) Petition fee;
(2) Reply and/or issue fee;
(3) Terminal disclaimer with disclaimer fee - required for all utility and plant applications filed before June 8, 1995; and for all design applications; and
(4) Statement that the entire delay was unintentional.

1. Petition fee
☒ Small entity-fee $ 770 (37 CFR 1.17(m)). Applicant claims small entity status. See 37 CFR 1.27.

☐ Other than small entity – fee $ _____ (37 CFR 1.17(m))

2. Reply and/or fee
A. The reply and/or fee to the above-noted Office action in the form of _____(identify type of reply):

☐ has been filed previously on _____.
☐ is enclosed herewith.

07/23/2008 EFLORES 00000016 10614366
01 FC:2453 770.00 OP

B. The issue fee and publication fee (if applicable) of $ 720.
☐ has been paid previously on _____.
☒ is enclosed herewith.

This collection of information is required by 37 CFR 1.137(b). The information is required to obtain or retain a benefit by the public which is to file (and by the USPTO to process) an application. Confidentiality is governed by 35 U.S.C. 122 and 37 CFR 1.11 and 1.14. This collection is estimated to take 1.0 hour to complete, including gathering, preparing, and submitting the completed application form to the USPTO. Time will vary depending upon the individual case. Any comments on the amount of time you require to complete this form and/or suggestions for reducing this burden, should be sent to the Chief Information Officer, U.S. Patent and Trademark Office, U.S. Department of Commerce, P.O. Box 1450, Alexandria, VA 22313-1450. DO NOT SEND FEES OR COMPLETED FORMS TO THIS ADDRESS. **SEND TO: Mail Stop Petition, Commissioner for Patents, P.O. Box 1450, Alexandria, VA 22313-1450.**

If you need assistance in completing the form, call 1-800-PTO-9199 and select option 2.

Under the Paperwork Reduction Act of 1995, no persons are required to respond to a collection of information unless it displays a valid OMB control number.

3. Terminal disclaimer with disclaimer fee

☒ Since this utility/plant application was filed on or after June 8, 1995, no terminal disclaimer is required.

☐ A terminal disclaimer (and disclaimer fee (37 CFR 1.20(d)) of $ _____ for a small entity or $ _____ for other than a small entity) disclaiming the required period of time is enclosed herewith (see PTO/SB/63).

4. STATEMENT: The entire delay in filing the required reply from the due date for the required reply until the filing of a grantable petition under 37 CFR 1.137(b) was unintentional. [NOTE: The United States Patent and Trademark Office may require additional information if there is a question as to whether either the abandonment or the delay in filing a petition under 37 CFR 1.137(b) was unintentional (MPEP 711.03(c), subsections (III)(C) and (D)).]

WARNING:

Petitioner/applicant is cautioned to avoid submitting personal information in documents filed in a patent application that may contribute to identity theft. Personal information such as social security numbers, bank account numbers, or credit card numbers (other than a check or credit card authorization form PTO-2038 submitted for payment purposes) is never required by the USPTO to support a petition or an application. If this type of personal information is included in documents submitted to the USPTO, petitioners/applicants should consider redacting such personal information from the documents before submitting them to the USPTO. Petitioner/applicant is advised that the record of a patent application is available to the public after publication of the application (unless a non-publication request in compliance with 37 CFR 1.213(a) is made in the application) or issuance of a patent. Furthermore, the record from an abandoned application may also be available to the public if the application is referenced in a published application or an issued patent (see 37 CFR 1.14). Checks and credit card authorization forms PTO-2038 submitted for payment purposes are not retained in the application file and therefore are not publicly available.

George J. Miao	July 20, 2008
Signature	Date
GEORGE J. MIAO	
Typed or printed name	Registration Number, if applicable
20400 VIA PAVISO, #A27	408-865-1158
Address	Telephone Number
CUPERTINO, CA 95014	
Address	

Enclosures: ☒ Fee Payment

☒ Reply

☐ Terminal Disclaimer Form

☒ Additional sheets containing statements establishing unintentional delay

☒ Other: Check 488 and Check 489

CERTIFICATE OF MAILING OR TRANSMISSION [37 CFR 1.8(a)]

I hereby certify that this correspondence is being:

☒ Deposited with the United States Postal Service on the date shown below with sufficient postage as first class mail in an envelope addressed to: Mail Stop Petition, Commissioner for Patents, P. O. Box 1450, Alexandria, VA 22313-1450.

☐ Transmitted by facsimile on the date shown below to the United States Patent and Trademark Office at (571) 273-8300.

7/20/2008	George J. Miao
Date	Signature
	GEORGE J. MIAO
	Typed or printed name of person signing certificate

RAM Fee History Query

Revenue Accounting and Management

Name/Number: 10614366 Total Records Found: 5

Start Date: Any Date End Date: Any Date

Accounting Date	Sequence Num.	Fee Type	Fee Code	Fee Amount	Mailroom Date	Payment Method
07/23/2008	00000076	1	2501	$720.00	07/23/2008	CK
07/23/2008	00000042	1	2453	$770.00	07/23/2008	CK
02/07/2007	00000087	1	2251	$60.00	02/07/2007	CK
07/10/2003	00000069	1	2001	$375.00	07/07/2003	CK
07/10/2003	00000070	1	2202	$27.00	07/07/2003	CK

UNITED STATES PATENT AND TRADEMARK OFFICE

Commissioner for Patents
United States Patent and Trademark Office
P.O. Box 1450
Alexandria, VA 22313-1450
www.uspto.gov

Linda E. Horner
United States Patent & Trademark Office
600 Dulany Street
Alexandria, VA 22314

COPY MAILED

SEP 15 2006

OFFICE OF PETITIONS

In re Application of
Neil Raven et al.
Application No. 10/614,370
Filed: July 8, 2003
Attorney Docket No. 1581.0990001

DECISION ON PETITION
TO WITHDRAW
FROM RECORD

This is a decision on the Request to Withdraw as attorney or agent of record under 37 C.F.R. § 1.36(b), filed June 7, 2006.

The request is **NOT APPROVED** as moot.

A review of the file record indicates that the power of attorney to Linda E. Horner has been revoked by the assignee of the patent application on November 4, 2004. Accordingly, the request to withdraw under 37 C.F.R. § 1.36(b) is moot.

All future communications from the Office will continue to be directed to the below-listed address until otherwise notified by applicant.

Telephone inquires concerning this decision should be directed to Terri Williams at 571-272-2991.

Denise Pothier
Petitions Examiner
Office of Petitions

cc: **Evan Law Group LLC**
600 West Jackson Blvd.
Suite 625
Chicago, IL 60661

SPE RESPONSE FOR CERTIFICATE OF CORRECTION

Paper No.: _____

DATE : 09/15/08

TO SPE OF : ART UNIT 1651

SUBJECT : Request for Certificate of Correction for Appl. No.: 10614370 Patent No.: 7303907 B2

Please respond to this request for a certificate of correction within 7 days.

FOR IFW FILES:

Please review the requested changes/corrections as shown in the **COCIN** document(s) in the IFW application image. No new matter should be introduced, nor should the scope or meaning of the claims be changed.

Please complete the response (see below) and forward the completed response to scanning using document code **COCX**.

FOR PAPER FILES:

Please review the requested changes/corrections as shown in the attached certificate of correction. Please complete this form (see below) and forward it with the file to:

Certificates of Correction Branch (CofC)
South Tower - 9A22
Palm Location 7580
You can fax the Directors/SPE response to 571-270-9990

Lamonte M. Newsome
Certificates of Correction Branch
703-308-9390 ext. 112

Thank You For Your Assistance

The request for issuing the above-identified correction(s) is hereby:
Note your decision on the appropriate box.

✓ **Approved**	**All** changes apply.
☐ **Approved in Part**	Specify below which changes **do not** apply.
☐ **Denied**	State the reasons for denial below.

Comments: _____

_____

_____

_____

_____

SPE _____ **Art Unit** _____

SPE RESPONSE FOR CERTIFICATE OF CORRECTION

Paper No.: _____

DATE : 09/15/08

TO SPE OF : ART UNIT 1651

SUBJECT : Request for Certificate of Correction for Appl. No.: 10614370 Patent No.: 7303907 B2

Please respond to this request for a certificate of correction within 7 days.

FOR IFW FILES:

Please review the requested changes/corrections as shown in the **COCIN** document(s) in the IFW application image. No new matter should be introduced, nor should the scope or meaning of the claims be changed.

Please complete the response (see below) and forward the completed response to scanning using document code **COCX**.

FOR PAPER FILES:

Please review the requested changes/corrections as shown in the attached certificate of correction. Please complete this form (see below) and forward it with the file to:

Certificates of Correction Branch (CofC)
South Tower - 9A22
Palm Location 7580
You can fax the Directors/SPE response to 571-270-9990

Lamonte M. Newsome
Certificates of Correction Branch
703-308-9390 ext. 112

Thank You For Your Assistance

The request for issuing the above-identified correction(s) is hereby:
Note your decision on the appropriate box.

- ■ **Approved** — **All** changes apply.
- ☐ **Approved in Part** — Specify below which changes **do not** apply.
- ☐ **Denied** — State the reasons for denial below.

Comments: _____

_____

_____

_____

_____

SPE /Michael G. Wityshyn/ Art Unit 1651

UNITED STATES PATENT AND TRADEMARK OFFICE

Commissioner for Patents
United States Patent and Trademark Office
P.O. Box 1450
Alexandria, VA 22313-1450
www.uspto.gov

KOESTNER BERTANI LLP
18662 MACARTHUR BLVD
SUITE 400
IRVINE, CA 92612

COPY MAILED
AUG 2 7 2004
OFFICE OF PETITIONS

In re Application of Tom Hartmann, et al. Application No. 10/614,393 Filed: July 3, 2003 Attorney Docket No. SW-00733/a (P004USC1)	: : : : :	DECISION ON PETITION UNDER 37 CFR 1.78(a)(3)

This is a decision on the petition under 37 CFR § 1.78(a)(3), filed June 2, 2004, to accept an unintentionally delayed claim under 35 U.S.C. § 120 for the benefit of priority to prior-filed nonprovisional Application No. 10/006,505, as set forth in the Application Data Sheet (ADS) filed concurrently with the instant petition.

The petition is **GRANTED.**

A petition for acceptance of a claim for late priority under 37 CFR 1.78(a)(3) is only applicable to those applications filed on or after November 29, 2000. Further, the petition is appropriate only after the expiration of the period specified in 37 CFR 1.78(a)(2)(ii). In addition, the petition under 37 CFR 1.78(a)(3) must be accompanied by:

(1) the reference required by 35 U.S.C. § 120 and 37 CFR 1.78(a)(2)(i) of the prior-filed application, unless previously submitted;

(2) the surcharge set forth in § 1.17(t); and

(3) a statement that the entire delay between the date the claim was due under 37 CFR 1.78(a)(2)(ii) and the date the claim was filed was unintentional. The Commissioner may require additional information where there is a question whether the delay was unintentional.

The instant pending application was filed on July 3, 2003, and was pending at the time of filing of the instant petition. A reference to the prior-filed nonprovisional application has been included in an ADS, as required by 37 CFR 1.78(a)(2)(iii).

The instant nonprovisional application was filed after November 29, 2000, and the claim herein for the benefit of priority to the prior-filed nonprovisional application is submitted after expiration of the period specified in 37 CFR 1.78(a)(2)(ii). Also, the reference to the prior-filed nonprovisional application was submitted during the pendency of the instant nonprovisional application, for which the claim for benefit of priority is sought. *See* 35 U.S.C. § 120. Accordingly, having found that the instant petition for acceptance of an unintentionally delayed claim for the benefit of priority under 35 U.S.C. § 120 to the prior-filed nonprovisional application satisfies the conditions of 37 CFR 1.78(a)(3), the petition is granted.

The granting of the petition to accept the delayed benefit claim to the prior-filed application under 37 CFR 1.78(a)(3) should not be construed as meaning that the instant application is entitled to the benefit of the prior-filed application. In order for the instant application to be entitled to the benefit of the prior-filed application, all other requirements under 35 U.S.C. § 120 and 37 CFR 1.78(a)(1) and (a)(2) must be met. Similarly, the fact that the corrected Filing Receipt accompanying this decision on petition includes the prior-filed application should not be construed as meaning that applicant is entitled to the claim for benefit of priority to the prior-filed application noted thereon. Accordingly, the examiner will, in due course, consider this benefit claim and determine whether the instant application is entitled to the benefit of the earlier filing date.

A corrected Filing Receipt, which includes the priority claim to the prior-filed nonprovisional application, accompanies this decision on petition.

Any questions concerning this decision on petition may be directed to Retta Williams at (703) 306-5594.

This matter is being referred to Technology Center Art Unit 3643 for appropriate action on the amendment filed July 20, 2004, including consideration by the examiner of applicant's entitlement to claim benefit of priority under 35 U.S.C. § 120 to the above-noted, prior-filed nonprovisional application.

Frances Hicks

Frances Hicks
Petitions Examiner
Office of Petitions
Office of the Deputy Commissioner
for Patent Examination Policy

Attachment: Corrected Filing Receipt

UNITED STATES PATENT AND TRADEMARK OFFICE

UNITED STATES DEPARTMENT OF COMMERCE
United States Patent and Trademark Office
Address: COMMISSIONER FOR PATENTS
P.O. Box 1450
Alexandria, Virginia 22313-1450
www.uspto.gov

APPLICATION NO.	FILING DATE	FIRST NAMED INVENTOR	ATTORNEY DOCKET NO.	CONFIRMATION NO.
10/614,395	07/03/2003	Shane S. Taylor	58232/A647	5914

23363 7590 12/15/2006
CHRISTIE, PARKER & HALE, LLP
PO BOX 7068
PASADENA, CA 91109-7068

EXAMINER
CHAMBERS, A MICHAEL

ART UNIT	PAPER NUMBER
3753	

DATE MAILED: 12/15/2006

Please find below and/or attached an Office communication concerning this application or proceeding.

UNITED STATES PATENT AND TRADEMARK OFFICE

Commissioner for Patents
United States Patent and Trademark Office
P.O. Box 1450
Alexandria, VA 22313-1450
www.uspto.gov

12/14/06

CHRISTIE, PARKER & HALE, LLP
PO BOX 7068
PASADENA CA 91109-7068

In re Application of: TAYLOR, SHANE S. et al Serial No.: 10/614,395 Filed: July 3, 2003 Docket: 58232/A647 Title: GAS VALVE	Withdrawal Holding of Abandonment

Art Unit 3753

This is a decision on petitioner's request filed Dec. 7, 2006 to review the holding of abandonment, mailed Oct. 10, 2006 for failure to respond to the Office action of May. 31, 2006.

A review of the file indicates that a request for a five-month extension of time and a response to the office action were filed on Oct. 2, 2006. The response was timely filed.

In view of the above, the Notice of Abandonment mailed Oct. 10, 2006 is in error and is hereby vacated. The holding of abandonment is withdrawn. This application is being forwarded to the examiner for appropriate action.

Summary: Holding of Abandonment Withdrawn.

Karen M. Young

Karen M. Young, Director
Technology Center 3700

UNITED STATES PATENT AND TRADEMARK OFFICE

Commissioner for Patents
United States Patent and Trademark Office
P.O. Box 1450
Alexandria, VA 22313-1450
www.uspto.gov

JUL 29 2004

DCM

In re Application of Allan Robert Knoll, et al. Serial Number: 10/614,400 Filed: July 3, 2003 For: NOVEL SUPERCONDUCTING ARTICLES, AND METHODS FOR FORMING AND USING SAME	:	PETITION UNDER M.P.E.P.708.02 IX

This is in response to the petition filed January 5, 2004, requesting that the above-identified application be granted Special Status under Section 708.02 IX of the MPEP and 37 CFR 1.102 (b) **(no fee required)**.

The request for Special Status considered under Section 708.02 IX of the MPEP is granted because criteria under 37 CFR 1.102(b) has been met.

Accordingly the petition is **GRANTED.**

Marian C. Knode

Marian C. Knode, Special Programs Examiner
Technology Center 1700
Chemical and Materials Engineering

TOLER & LARSON & ABEL L.L.P.
5000 PLAZA ON THE LAKE STE 265
AUSTIN TX 78746

UNITED STATES PATENT AND TRADEMARK OFFICE

Commissioner for Patents
United States Patent and Trademark Office
P.O. Box 1450
Alexandria, VA 22313-1450
www.uspto.gov

Ya-Chiao Chang
c/o BAKER & McKENZIE
15F, No. 168 Tun Hwa North Road
Taipei 105 TW TAIWAN

COPY MAILED

JUL 3 1 2006

OFFICE OF PETITIONS

In re Application of	:	
Chin-Long Lin	:	
Application No. 10/614,409	:	DECISION ON PETITION
Filed: July 4, 2003	:	TO WITHDRAW
Attorney Docket No. 68146241-0245012(005012)	:	FROM RECORD
	:	

This is a decision on the Request to Withdraw as attorney or agent of record under 37 C.F.R. § 1.36(b), filed January 26, 2006.

The request is **NOT APPROVED**.

A grantable request to withdraw as attorney/agent of record must be signed by every attorney/agent seeking to withdraw or contain a clear indication that one attorney is signing on behalf of another/others. A request to withdraw will not be approved unless at least 30 (thirty) days would remain between the date of approval and the later of the expiration date of a time to file a response or the expiration date of the maximum time period which can be extended under 37 C.F.R. § 1.136(a).

The request cannot be approved because no reasons for withdrawal have been provided. The Office cannot, at this time, determine whether practitioner's request is one of the mandatory or permissive reasons enumerated in 37 CFR 10.40. Any subsequent requests must include reasons for withdrawal. Please note that there is a space provided for on PTO/SB/83 (Request to Withdraw as Attorney or Agent) to supply practitioner's reasons.

All future communications from the Office will continue to be directed to the above-listed address until otherwise notified by applicant.

Telephone inquiries concerning this decision should be directed to April Wise at 571-272-1642.

Denise Pothier
Petitions Examiner
Office of Petitions

cc: Jeff Tolar
Tolar Larson & Abel LLP
5000 Plaza On The Lake
Suite 265
Austin, TX 78746

UNITED STATES PATENT AND TRADEMARK OFFICE

Commissioner for Patents
United States Patent and Trademark Office
P.O. Box 1450
Alexandria, VA 22313-1450
www.uspto.gov

TOLER LAW GROUP
8500 BLUFFSTONE COVE
SUITE A201
AUSTIN TX 78759

COPY MAILED

SEP 22 2008

OFFICE OF PETITIONS

In re Application of	:	
Lin, et al.	:	
Application No. 10/614,409	:	ON PETITION
Filed: July 4, 2003	:	
Attorney Docket No. 1087-PROT005012	:	

This is a decision on the petition under 37 CFR 1.137(b), filed August 19, 2008, to revive the above-identified application.

The petition under 37 CFR 1.137(b) is **GRANTED**.

The above-identified application became abandoned for failure to timely file a response to the non-final Office action mailed November 30, 2006. This Office action set an extendable period for reply of three months. No extensions of time were obtained. Accordingly, no reply having been received, the application became abandoned on March 1, 2008. A Notice of Abandonment was mailed on July 1, 2008.

With the instant petition, applicants paid the petition fee, made the proper statement of unintentional delay, and submitted the required reply in the form of an Amendment.

It is not apparent whether the person signing the statement of unintentional delay was in a position to have firsthand or direct knowledge of the facts and circumstances of the delay at issue. Nevertheless, such statement is being treated as having been made as the result of a reasonable inquiry into the facts and circumstances of such delay. See 37 CFR 10.18(b) and Changes to Patent Practice and Procedure; Final Rule Notice, 62 Fed. Reg. 53131, 53178 (October 10, 1997), 1203 Off. Gaz. Pat. Office 63, 103 (October 21, 1997). In the event that such an inquiry has not been made, petitioner must make such an inquiry. If such inquiry results in the discovery that it is not correct that the entire delay in filing the required reply from the due date for the reply until the filing of a grantable petition pursuant to 37 CFR 1.137(b) was unintentional, petitioner must notify the Office.

The matter is being forwarded to Group Art Unit 2621 for consideration of the Amendment filed August 19, 2008.

Telephone inquiries concerning this decision should be directed to the undersigned at (571)272-3207.

Cliff Congo
Petitions Attorney
Office of Petitions

SPE RESPONSE FOR CERTIFICATE OF CORRECTION

Paper No.: _____

DATE : May 4, 2006

TO SPE OF : ART UNIT 2614 **(S.P.E. Wing Chan)**

SUBJECT : Request for Certificate of Correction for Appl. No.: 10/614410 Patent No.: 7,027,573

Please respond to this request for a certificate of correction within 7 days.

Please review the requested changes/corrections as shown in the **COCIN** document(s) in the IFW application image. No new matter should be introduced, nor should the scope or meaning of the claims be changed.

Please complete the response (see below) and forward the completed response to scanning using document code **COCX**.

Please see the claims.

STACY POWELL

Certificates of Correction Branch

703-308-9390 ext. 120

Thank You For Your Assistance

The request for issuing the above-identified correction(s) is hereby:

Note your decision on the appropriate box.

- ☑ **Approved** — **All** changes apply.
- ☐ **Approved in Part** — Specify below which changes **do not** apply.
- ☐ **Denied** — State the reasons for denial below.

Comments: _____

Wing Fu Chan — **SPE**

2614 — **Art Unit**

UNITED STATES PATENT AND TRADEMARK OFFICE

Commissioner for Patents
United States Patent and Trademark Office
P.O. Box 1450
Alexandria, VA 22313-1450
www.uspto.gov

DORSEY & WHITNEY LLP
INTELLECTUAL PROPERTY DEPARTMENT
SUITE 1500
50 SOUTH SIXTH STREET
MINNEAPOLIS MN 55402-1498

COPY MAILED

DEC 0 4 2009

OFFICE OF PETITIONS

In re Application of :
Lawrence A. Shimp et al. :
Application No. 10/614,448 :
Filed: July 7, 2003 :
Attorney Docket No.285-180 PCT:
CIIP

DECISION ON APPLICATION
FOR PATENT TERM ADJUSTMENT

This is a decision on the "REQUEST FOR RECONSIDERATION OF PATENT TERM AJDUSTMENT UNDER 37 C.F.R. § 1.705(b)" filed September 9, 2009. Applicant requests that the initial determination of patent term adjustment under 35 U.S.C. 154(b) be corrected from one hundred sixty-five (165) days to two hundred seventy-three (273) days.

The application for patent term adjustment is **GRANTED**.

The Office has updated the PAIR screen to reflect that the correct patent term adjustment determination at the time of the mailing of the notice of allowance is **273 days**. A copy of the updated PAIR screen, showing the correct determination, is enclosed.

On June 9, 2009, the Office mailed the Determination of Patent Term Adjustment under 35 U.S.C. 154(b) in the above-identified application. The Notice stated that the patent term adjustment (PTA) to date is 165 days. On September 9, 2009, applicant timely submitted the instant application for patent term adjustment[1].

[1] The Office records show that the issue fee was also received on September 9, 2009.

Applicant disputes the period of adjustment of 479 days entered pursuant to 37 CFR 1.702(a)(1) and 1.703(a)(1) for Office delay in failing to mail the first Office action under 35 U.S.C. 132 no later than 14 months after the actual filing date of the application. Applicant asserts that 479 days of patent term adjustment under 37 CFR 1.702(a)(1) and 1.703(a)(1) is in error because the Office failed to appreciate that the Restriction Requirement mailed on December 30, 2005, was vacated by the Restriction Requirement mailed April 17, 2006. Applicant contends that the April 17, 2006, mailing date of the Restriction Requirement should have been used to calculate the period of adjustment pursuant to 37 CFR 1.702(a)(1) and 1.703(a)(1).

RELEVANT STATUTES AND REGULATIONS

35 U.S.C. 154(b)(1)(A)(i) provides that:

— Subject to the limitations under paragraph (2), if the issue of an original patent is delayed due to the failure of the Patent and Trademark Office to—

(i) provide at least one of the notifications under section 132 of this title or a notice of allowance under section 151 of this title not later than 14 months after—

(I) the date on which an application was filed under section 111(a) of this title; or
(II) the date on which an international application fulfilled the requirements of section 371 of this title[.]

37 CFR 1.702 provides that:

(a) Failure to take certain actions within specified time frames. Subject to the provisions of 35 U.S.C. 154(b) and this subpart, the term of an original patent shall be adjusted if the issuance of the patent was delayed due to the failure of the Office to:

(1) Mail at least one of a notification under 35 U.S.C. 132 or a notice of allowance under 35 U.S.C. 151 not later than fourteen months after the date on which the

application was filed under 35 U.S.C. 111(a) or fulfilled the requirements of 35 U.S.C. 371 in an international application[.]

37 CFR 1.703 provides, in pertinent part, that:

(a) The period of adjustment under § 1.702(a) is the sum of the following periods:

(1) The number of days, if any, in the period beginning on the day after the date that is fourteen months after the date on which the application was filed under 35 U.S.C. 111(a) or fulfilled the requirements of 35 U.S.C. 371 and ending on the date of mailing of either an action under 35 U.S.C. 132, or a notice of allowance under 35 U.S.C. 151, whichever occurs first[.]

OPINION

Applicants' arguments and evidence have been considered and are well taken. In light of the application history, it has been determined that the period of adjustment for Office delay pursuant to 37 CFR 1.702(a)(1) is 587 days. The Office mailed a Restriction Requirement on December 30, 2005. On April 17, 2006, the Office mailed another Restriction Requirement that stated, in pertinent part, that:

> 1. Examiner appreciates courtesy extended by applicant's representative to point out to the Examiner in a telephone interview on 23 January 2006 that the Election Requirement in Office Action mailed 30 December 2005 does not encompass all the claims presented for examination in Applicant's Preliminary amendment filed 09 October 2003.
>
> 2. In view of the telephonic interview cited, *supra*, Examiner herewith vacates the Election/Restriction Requirement in the Office action of 30 December 2005. A new Office Action follows.

Excerpt taken from Restriction Requirement mailed April 17, 2006, pg. 3.

As the Restriction Requirement mailed December 30, 2005, was vacated and a new Restriction Requirement mailed on April 17, 2006, the Restriction Requirement mailed April 17, 2006, is the Office action under 35 U.S.C. 132 that should have been used in calculation of the period of adjustment under 37 CFR 1.702(a)(1). Accordingly, the period of adjustment under 37 CFR 1.702(a)(1) of 479 days will be removed and period of 587 days will be entered.

The $200.00 fee set forth in 37 CFR 1.18(e) is acknowledged. No additional fees are required.

The application is being forwarded to the Office of Data Management for issuance of the patent. The patent term adjustment indicated on the patent (as shown on the Issue Notification mailed about three weeks prior to the patent issuance) will include any additional adjustment accrued both for Office delay in issuing the patent more than four months after payment of the issue fee and satisfaction of all outstanding requirements, and for the Office taking in excess of three years to issue the patent (to the extent that the three-year period does not overlap with periods already accorded).

Telephone inquiries specific to this matter should be directed to Kenya A. McLaughlin, Petitions Attorney, at (571) 272-3222.

Christina Tartera Donnell

Christina Tartera Donnell
Senior Petitions Attorney
Office of Petitions

Enclosure: Copy of REVISED PAIR Screen

Day : Thursday
Date: 12/3/2009

PALM INTRANET

Time: 16:50:31

PTA Calculations for Application: 10/614448			
Application Filing Date:	07/07/2003	PTO Delay (PTO):	479
Issue Date of Patent:		Three Years:	0
Pre-Issue Petitions:	0	Applicant Delay (APPL):	314
Post-Issue Petitions:	0	Total PTA (days):	273
PTO Delay Adjustment:	108		

File Contents History

Number	Date	Contents Description	PTO	APPL	START
103	12/03/2009	ADJUSTMENT OF PTA CALCULATION BY PTO	587		
102	12/03/2009	ADJUSTMENT OF PTA CALCULATION BY PTO		479	
91	06/09/2009	MAIL NOTICE OF ALLOWANCE			
87	05/15/2009	FILING RECEIPT - CORRECTED			
85	05/14/2009	NOTICE OF ALLOWANCE DATA VERIFICATION COMPLETED			
84	05/14/2009	CASE DOCKETED TO EXAMINER IN GAU			
83	05/14/2009	ISSUE REVISION COMPLETED			
82	05/14/2009	DOCUMENT VERIFICATION			
81	10/01/2003	REFERENCE CAPTURE ON IDS			
80	10/01/2003	INFORMATION DISCLOSURE STATEMENT (IDS) FILED			
79	05/11/2009	EXAMINER INTERVIEW SUMMARY RECORD (PTOL - 413)			
78	05/08/2009	EXAMINER INTERVIEW SUMMARY RECORD (PTOL - 413)			
77	05/06/2009	EXAMINER INTERVIEW SUMMARY RECORD (PTOL - 413)			
76	05/14/2009	EXAMINER'S AMENDMENT COMMUNICATION			
75	05/11/2009	NOTICE OF ALLOWABILITY			
74	02/24/2009	INFORMATION DISCLOSURE STATEMENT CONSIDERED			
73	03/06/2009	DATE FORWARDED TO EXAMINER			
72	02/24/2009	RESPONSE AFTER NON-FINAL ACTION		119	68
71	02/24/2009	INFORMATION DISCLOSURE STATEMENT (IDS) FILED			
70	02/17/2009	MAIL NOTICE OF INFORMAL OR NON-RESPONSIVE AMENDMENT			

69	12/04/2008	DATE FORWARDED TO EXAMINER			
68.1	10/28/2008	INFORMAL OR NON-RESPONSIVE AMENDMENT AFTER EXAMINER ACTION			
68	10/28/2008	RESPONSE AFTER NON-FINAL ACTION			
67	07/28/2008	MAIL NON-FINAL REJECTION			
66	07/21/2008	NON-FINAL REJECTION			
65	04/18/2008	INFORMATION DISCLOSURE STATEMENT CONSIDERED			
64	04/18/2008	REFERENCE CAPTURE ON IDS			
62	04/18/2008	INFORMATION DISCLOSURE STATEMENT (IDS) FILED		17	60
61	05/09/2008	DATE FORWARDED TO EXAMINER			
60	04/01/2008	RESPONSE AFTER NON-FINAL ACTION		5	58
59	04/18/2008	INFORMATION DISCLOSURE STATEMENT (IDS) FILED			
58	12/27/2007	MAIL NON-FINAL REJECTION			
57	12/21/2007	NON-FINAL REJECTION			
56	10/09/2007	DATE FORWARDED TO EXAMINER			
55	09/26/2007	AMENDMENT SUBMITTED/ENTERED WITH FILING OF CPA/RCE			
54	10/09/2007	DATE FORWARDED TO EXAMINER			
53	09/26/2007	REQUEST FOR CONTINUED EXAMINATION (RCE)			
52	10/09/2007	DISPOSAL FOR A RCE/CPA/129 (EXPRESS ABANDONMENT IF CPA)			
51	09/26/2007	WORKFLOW - REQUEST FOR RCE - BEGIN			
50	07/27/2007	MAIL FINAL REJECTION (PTOL - 326)			
49	07/23/2007	FINAL REJECTION			
48	10/01/2003	INFORMATION DISCLOSURE STATEMENT CONSIDERED			
47	10/01/2003	INFORMATION DISCLOSURE STATEMENT (IDS) FILED			
46	05/09/2007	DATE FORWARDED TO EXAMINER			
45	05/03/2007	RESPONSE AFTER NON-FINAL ACTION		143	40
44	04/03/2007	MAIL NOTICE OF INFORMAL OR NON-RESPONSIVE AMENDMENT			
43	12/28/2006	CORRESPONDENCE ADDRESS CHANGE			
42	12/29/2006	CHANGE IN POWER OF ATTORNEY (MAY INCLUDE ASSOCIATE POA)			
41	12/28/2006	DATE FORWARDED TO EXAMINER			

40.1	12/11/2006	INFORMAL OR NON-RESPONSIVE AMENDMENT AFTER EXAMINER ACTION			
40	12/11/2006	RESPONSE AFTER NON-FINAL ACTION		30	37
39	12/11/2006	REQUEST FOR EXTENSION OF TIME - GRANTED			
38	10/12/2006	CASE DOCKETED TO EXAMINER IN GAU			
37	08/11/2006	MAIL NON-FINAL REJECTION			
36	08/07/2006	NON-FINAL REJECTION			
35	05/24/2006	DATE FORWARDED TO EXAMINER			
34	05/19/2006	RESPONSE TO ELECTION / RESTRICTION FILED			
33	04/17/2006	MAIL NOTICE OF WITHDRAWN ACTION			
32	04/17/2006	MAIL RESTRICTION REQUIREMENT			
31	01/23/2006	EXAMINER INTERVIEW SUMMARY RECORD (PTOL - 413)			
30	04/14/2006	REQUIREMENT FOR RESTRICTION / ELECTION			
29	04/14/2006	LETTER WITHDRAWING / VACATING OFFICE ACTION			
22	12/30/2005	MAIL RESTRICTION REQUIREMENT	479		-1
21	12/27/2005	REQUIREMENT FOR RESTRICTION / ELECTION			
20	06/28/2005	CASE DOCKETED TO EXAMINER IN GAU			
19	08/12/2004	CORRESPONDENCE ADDRESS CHANGE			
18	01/14/2004	IFW TSS PROCESSING BY TECH CENTER COMPLETE			
17	10/09/2003	PRELIMINARY AMENDMENT			
16	01/14/2004	CASE DOCKETED TO EXAMINER IN GAU			
15	12/04/2003	APPLICATION RETURN FROM OIPE			
14	12/04/2003	APPLICATION RETURN TO OIPE			
13	12/04/2003	APPLICATION DISPATCHED FROM OIPE			
12	12/04/2003	APPLICATION IS NOW COMPLETE			
11	10/30/2003	ADDITIONAL APPLICATION FILING FEES			
10	10/30/2003	A STATEMENT BY ONE OR MORE INVENTORS SATISFYING THE REQUIREMENT UNDER 35 USC 115, OATH OF THE APPLIC			
9	07/07/2003	CLAIM PRELIMINARY AMENDMENT			
8	10/01/2003	NOTICE MAILED--APPLICATION INCOMPLETE--FILING DATE ASSIGNED			
6	09/17/2003	CASE CLASSIFIED BY OIPE			
5	09/17/2003	CLEARED BY OIPE CSR			
4	09/17/2003	CASE CLASSIFIED BY OIPE			

3	09/17/2003	CLEARED BY OIPE CSR			
2	09/06/2003	IFW SCAN & PACR AUTO SECURITY REVIEW			
1	07/07/2003	INITIAL EXAM TEAM NN			

Search Another: Application# Search

EXPLANATION OF PTA CALCULATION

EXPLANATION OF PTE CALCULATION

To go back, right click here and select Back. To go forward, right click here and select Forward. To refresh, right click here and select Refresh.

Back to OASIS | Home page

UNITED STATES PATENT AND TRADEMARK OFFICE

UNITED STATES DEPARTMENT OF COMMERCE
United States Patent and Trademark Office
Address: COMMISSIONER FOR PATENTS
P.O. Box 1450
Alexandria, Virginia 22313-1450
www.uspto.gov

DORSEY & WHITNEY LLP
INTELLECTUAL PROPERTY DEPARTMENT
SUITE 1500
50 SOUTH SIXTH STREET
MINNEAPOLIS, MN 55402-1498

Mail Date: 04/21/2010

Applicant	: Lawrence A. Shimp	: DECISION ON REQUEST FOR
Patent Number	: 7645458	: RECALCULATION of PATENT
Issue Date	: 01/12/2010	: TERM ADJUSTMENT IN VIEW
Appliction No	: 10/614,448	: OF WYETH AND NOTICE OF INTENT TO
Filed	: 07/07/2003	: ISSUE CERTIFICATE OF CORRECTION
		:

The Request for Recalculation is **GRANTED** to the extent indicated.

The patent term adjustment has been determined to be **721** days. The USPTO will *sua sponte* issue a certificate of correction reflecting the amount of PTA days determined by the recalculation.

Prior to the issuance of the certificate of correction, the USPTO will afford patentee an opportunity to be heard and request reconsideration. Accordingly, patentee has **one month or thirty (30) days**, whichever is longer, to file a request for reconsideration of this patent term adjustment calculation. See 35 U.S.C. 154(b)(3)(B)(ii) and 37 CFR 1.322(a)(4). No extensions of time will be granted under 37 CFR 1.136.

Patentee should use document code PET.OP if electronically filing a request for reconsideration of this patent term adjustment calculation. The patentee must also include the information required by 37 CFR 1.705(b)(2) and the fee required by 37 CFR 1.18(e). If patentee does not file a timely request for reconsideration of this patent term adjustment calculation including the information required by 37 CFR 1.705(b)(2) and the fee required by 37 CFR 1.18(e), the USPTO will issue a certificate of correction reflecting the PTA determination noted above.

Patentee should be aware that in order to preserve the right to review in the United States District Court for the District of Columbia of the USPTO patent term adjustment determination, patentee must ensure that he or she also take the steps required under 35 U.S.C. 154(b)(4)(A) in a timely manner. Nothing in the request for recalculation should be construed as providing an alternative time frame for commencing a civil action under 35 U.S.C. 154(b)(4)(A).

Any questions concerning this decision should be directed to the Office of Patent Legal Administration at 571-272-7702.

UNITED STATES PATENT AND TRADEMARK OFFICE

Commissioner for Patents
United States Patent and Trademark Office
P.O. Box 1450
Alexandria, VA 22313-1450
www.uspto.gov

FOLEY & LARDNER LLP
975 PAGE MILL ROAD
PALO ALTO CA 94304

COPY MAILED

APR 29 2008

OFFICE OF PETITIONS

In re Patent No. 6,864,258	:	
Wolff et al.	:	
Issue Date: March 8, 2005	:	
Application No. 10/614,460	:	ON PETITION
Filed: July 7, 2003	:	
Attorney Docket No. 98,164-A24	:	

This is a decision on the "Petition Under 37 C.F.R. § 1.182 REQUESTING ENTRY OF CORRECTED TERMINAL DISCLAIMER," filed December 27, 2007, requesting the entry of corrected terminal disclaimers, in lieu of the terminal disclaimers filed on June 25, 2004.

In the present petition, patentees state:

> Ownership was recently corrected in the above-noted patent to reflect that the owner of the above-noted patent is **ROCHE PALO ALTO LLC**, successor in interest to **SYNTEX (U.S.A.) INC[.]** Inventor, Andrew A. WOLFF, was obligated to have assigned his rights to **SYNTEX (U.S.A.) INC**. rather than **CV THERAPEUTICS, INC**. During prosecution of the patent application that matured into the above-noted patent, terminal disclaimers were filed indicating that **CV THERAPEUTICS, INC**. was the 100% of the entire right, title, and interest[.] The current assignee does not match the assignee on the terminal disclaimers filed during prosecution. As such, Patentees are respectfully requesting that the Director enter the enclosed corrected Terminal Disclaimers which indicate **ROCHE PALO ALTO LLC** as the 100% owner of the

entire right, title, and interest as shown in the corrected chain of title.

Petition, pp. 1-2.

The petition is **DISMISSED** to the extent that the terminal disclaimers filed June 25, 2004, will not be removed from the record. Any request for reconsideration must be filed within TWO (2) MONTHS. This two-month period is governed by 37 CFR 1.181(f) and is not extendable under 37 CFR 1.136.

Application No. 10/614,460, filed July 7, 2003, issued as U.S. Patent No. 6,864,258 on March 8, 2005.

Patentees do not request that the terminal disclaimers be removed or nullified. There is no error in the patent requiring correction. As such, this petition does not necessitate consideration of whether issuance of a certificate of correction is warranted. Rather, patentees request, in effect, that the terminal disclaimers, filed June 25, 2004, be replaced in the record with the corrected terminal disclaimers filed December 27, 2007.

The terminal disclaimers filed June 25, 2004, were made of record and considered by the examiner in examination and allowance of this application. Removal of the terminal disclaimers filed June 25, 2004, from the application record is inappropriate.

Placement of the terminal disclaimer filed December 27, 2007 (along with the petition and petition decision) in the record is sufficient to complete the record. No further action will be undertaken.

The petition fee will not be refunded.

Telephone inquiries concerning this decision may be directed to the undersigned at 571-272-3211.

Christina Tartera Donnell

Christina Tartera Donnell
Senior Petitions Attorney
Office of Petitions

UNITED STATES PATENT AND TRADEMARK OFFICE

COMMISSIONER FOR PATENTS
UNITED STATES PATENT AND TRADEMARK OFFICE
P.O. BOX 1450
ALEXANDRIA, VA 22313-1450
www.uspto.gov

FOLEY & LARDNER LLP
975 PAGE MILL ROAD
PALO ALTO CA 94304

COPY MAILED

MAR 3 1 2009

OFFICE OF PETITIONS

In re Patent No. 6,864,258
Issue Date: March 8, 2005
Application No. 10/614,460
Filed: July 7, 2003
Attorney Docket No. 98,164-A24

NOTICE

This is a notice regarding your request for acceptance of a fee deficiency submission under 37 CFR 1.28.

The Office no longer investigates or rejects original or reissue applications under 37 CFR 1.56. **1098 Off. Gaz. Pat. Office 502 (January 3, 1989)**. Therefore, nothing in this Notice is intended to imply that an investigation was done.

Your fee deficiency submission under 37 CFR 1.28 is hereby **ACCEPTED**.

This application is no longer entitled to small entity status. Accordingly, all future fees paid in this application must be paid at the large entity rate.

The file does not indicate a change of address has been submitted, although the address given on the petition differs from the address of record. If appropriate, a change of address should be filed in accordance with MPEP 601.03. A courtesy copy of this decision is being mailed to the address given on the petition; however, the Office will mail all future correspondence solely to the address of record.

Petitioner will not receive future correspondence related to maintenance fees for the patent unless a "Fee Address" Indication Form (see PTO/SB/47) and Request for Customer Number (see PTO/SB/125) are submitted.

Inquiries related to this communication should be directed to the undersigned at (571) 272-3213.

Cheryl Gibson Baylor

Cheryl Gibson-Baylor
Petitions Examiner
Office of Petitions

cc: A. Blair Hughes
McDonnell Boehnen Hulbert & Berghoff LLP
300 South Wacker Drive
Chicago, IL 60606

Attachment(s)

UNITED STATES PATENT AND TRADEMARK OFFICE

Commissioner for Patents
United States Patent and Trademark Office
P.O. Box 1450
Alexandria, VA 22313-1450
www.uspto.gov

MESMER & DELEAULT PLLC
41 BROOK STREET
MANCHESTER, NH 03104

COPY MAILED

FEB 0 2 2007

OFFICE OF PETITIONS

In re Application of :
Zhixin Li :
Application No. 10/614,461 : DECISION GRANTING PETITION
Filed: July 7, 2003 : UNDER 37 CFR 1.137(b)
Attorney Docket No. FERUSO603 :

This is a decision on the petition under 37 CFR 1.137(b), filed August 2, 2006, to revive the above-identified application.

The petition is **GRANTED**.

This application became abandoned for failure to timely pay the issue and publication fees on or before June 19, 2006, as required by the Notice of Allowance and Fee(s) Due mailed March 17, 2006.

The petition satisfies the conditions for revival pursuant to the provisions of 37 CFR 1.137(b) in that (1) the reply in the form of payment of the issue and publication fees ($1,400 and $300, respectively); (2) the $1,500 petition fee; and (3) the required statement of unintentional delay have been received. Accordingly, the issue and publication fees are accepted as having been unintentionally delayed.

Telephone inquiries concerning this decision should be directed to the undersigned at (571) 272-3218.

The application file is being referred to Publishing Division.

Frances Hicks
Petitions Examiner
Office of Petitions

UNITED STATES PATENT AND TRADEMARK OFFICE

Commissioner for Patents
United States Patent and Trademark Office
P.O. Box 1450
Alexandria, VA 22313-1450
www.uspto.gov

JOSEPH E. FUNK
82 CHASE RD
LONDONDERRY, NH 03053

COPY MAILED

SEP 2 2 2005

OFFICE OF PETITIONS

In re Application of	:	
Bruce C. Monk et al	:	
Application No. 10/614,469	:	ON PETITION
Filed: July 7, 2003	:	
Attorney Docket No. AT-4	:	

This is a decision on the petition under 37 CFR 1.137(b), filed August 29, 2005, to revive the above-identified application.

The petition is **GRANTED**.

The above-identified application became abandoned for failure to reply in a timely manner to the non-final Office action mailed November 30, 2004, which set a shortened statutory period for reply of three (3) months. No extensions of time under the provisions of 37 CFR 1.136(a) were obtained. Accordingly, the above-identified application became abandoned on March 1, 2005.

The above-identified application is being revived solely for purposes of continuity. As continuity has been established by this decision reviving the above-identified application, the above-identified application is again abandoned in favor of a continuing application No. 11/214,304.

The file does not indicate a change of address has been submitted, although the address given on the petition differs from the address of record. If appropriate, a change of address should be filed in accordance with MPEP 601.03. A courtesy copy of this decision is being mailed to the address given on the petition; however, the Office will mail all future correspondence solely to the address of record.

Telephone inquiries concerning this decision should be directed to Wan Laymon at (571) 272-3220.

This matter is being referred to Files Repository.

Wan Laymon
Wan Laymon
Petitions Examiner
Office of Petitions
Office of the Deputy Commissioner
for Patent Examination Policy

cc: JOSEPH E. FUNK
PO BOX 661
LONDONDERRY, NH 03053

UNITED STATES PATENT AND TRADEMARK OFFICE

Commissioner for Patents
United States Patent and Trademark Office
P.O. Box 1450
Alexandria, VA 22313-1450
www.uspto.gov

MERCHANT & GOULD P.C.
P.O. BOX 2903
MINNEAPOLIS MN 55402-0903

COPY MAILED

MAY 10 2007

OFFICE OF PETITIONS

In re Application of
PERSON HEI, Kimberly L. et al
Application No. 10/614,474
Filed: July 07, 2003
Attorney Docket No. **163.1404USC2**

DECISION ON PETITION
TO WITHDRAW
FROM RECORD

This is a decision on the Request to Withdraw as attorney or agent of record under 37 C.F.R. § 1.36(b), filed January 22, 2007.

The request is **APPROVED**.

A grantable request to withdraw as attorney/agent of record must be signed by every attorney/agent seeking to withdraw or contain a clear indication that one attorney is signing on behalf of another/others. A request to withdraw will not be approved unless at least 30 (thirty) days would remain between the date of approval and the later of the expiration date of a time to file a response or the expiration date of the maximum time period which can be extended under 37 C.F.R. § 1.136(a).

The request was signed by Sarah M. Monfeldt. Sarah M. Monfeldt has been withdrawn, all other attorneys remain of record. The correspondence address of record remains unchanged.

Telephone inquiries concerning this decision should be directed to Tredelle Jackson at 571-272-2783.

Monica A. Graves
Petitions Examiner
Office of Petitions

UNITED STATES PATENT AND TRADEMARK OFFICE

Commissioner for Patents
United States Patent and Trademark Office
P.O. Box 1450
Alexandria, VA 22313-1450
www.uspto.gov

PAUL D. YASGER
ABBOTT LABORATORIES
100 ABBOTT PARK ROAD
DEPT. 377/AP6A
ABBOTT PARK, IL 60064-6008

COPY MAILED

MAY 30 2008

OFFICE OF PETITIONS

In re Application of :
Robert Paul Luoma II :
Application No. 10/614,485 : ON PETITION
Filed: July 7, 2003 :
Attorney Docket No. 6801USP1

This is a decision on the petition, filed May 28, 2008 under 37 CFR 1.313(c)(2) to withdraw the above-identified application from issue after payment of the issue fee.

The petition is **GRANTED**.

The above-identified application is withdrawn from issue for consideration of a submission under 37 CFR 1.114 (request for continued examination). See 37 CFR 1.313(c)(2).

Petitioner is advised that the issue fee paid on April 21, 2008 in the above-identified application cannot be refunded. If, however, the above-identified application is again allowed, petitioner may request that it be applied towards the issue fee required by the new Notice of Allowance.[1]

Telephone inquiries should be directed to Irvin Dingle at (571) 272-3210.

This matter is being referred to Technology Center AU 3653 for processing of the request for continued examination under 37 CFR 1.114 and for consideration of the concurrently filed Information Disclosure Statement.

Irvin Dingle
Petitions Examiner
Office of Petitions

---

[1] The request to apply the issue fee to the new Notice may be satisfied by completing and returning the new Issue Fee Transmittal Form PTOL-85(b), which includes the following language thereon: Commissioner for Patents is requested to apply the Issue Fee and Publication Fee (if any) or re-apply any previously paid issue fee to the application identified above. Petitioner is advised that, whether a fee is indicated as being due or not, the Issue Fee Transmittal Form **must** be completed and timely submitted to avoid abandonment. Note the language in bold text on the first page of the Notice of Allowance and Fee(s) Due (PTOL-85).

UNITED STATES PATENT AND TRADEMARK OFFICE

Commissioner for Patents
United States Patent and Trademark Office
P.O. Box 1450
Alexandria, VA 22313-1450
www.uspto.gov

PAUL D. YASGER
ABBOTT LABORATORIES
100 ABBOTT PARK ROAD
DEPT. 377/AP6A
ABBOTT PARK, IL 60064-6008

COPY MAILED

OCT 0 2 2008

OFFICE OF PETITIONS

In re Application of	:	
Robert Paul Luoma	:	
Application No. 10/614,485	:	DECISION GRANTING PETITION
Filed: July 7, 2003	:	UNDER 37 CFR 1.313(c)(2)
Attorney Docket No. 6801USP1	:	

This is a decision on the petition under 37 CFR 1.313(c)(2), filed October 1, 2008, to withdraw the above-identified application from issue after payment of the issue fee.

The petition is **GRANTED**.

The above-identified application is withdrawn from issue for consideration of a submission under 37 CFR 1.114 (request for continued examination). *See* 37 CFR 1.313(c)(2).

Petitioner is advised that the issue fee paid on September 25, 2008 cannot be refunded. If, however, this application is again allowed, petitioner may request that it be applied towards the issue fee required by the new Notice of Allowance.[1]

Telephone inquiries regarding this decision should be directed to undersigned at (571) 272-1642.

This application is being referred to Technology Center AU 3653 for processing of the request for continued examination under 37 CFR 1.114 and for consideration of the concurrently filed information disclosure statement.

/April M. Wise/
April M. Wise
Petition Examiner
Office of Petitions

---

[1] *The request to apply the issue fee to the new Notice may be satisfied by completing and returning the new Part B – Fee(s) Transmittal Form (along with any balance due at the time of submission). Petitioner is advised that the Issue Fee Transmittal Form must be completed and timely submitted to avoid abandonment of the application.*

UNITED STATES PATENT AND TRADEMARK OFFICE

Commissioner for Patents
United States Patent and Trademark Office
P.O. Box 1450
Alexandria, VA 22313-1450
www.uspto.gov

Paper No. 091404

OCT - 5 2004

Storm & Hemingway
460 Preston Common West
8117 Preston Rd.
Dallas, TX 75225

In re Application of:	:	
O'Connell	:	
Serial No.: 10/614,488	:	DECISION ON REQUEST TO WITHDRAW FROM RECORD
Filed: July 07, 2003	:	
Attorney Docket No.: **SHRINK-P1001**	:	

This is a decision on the request to withdraw as attorney/agent of record under 37 C.F.R. § 1.36, filed May 19, 2004.

A grantable request to withdraw as attorney of record must be signed by every attorney seeking to withdraw or contain a clear indication that one attorney is signing on behalf of others. A request to withdraw will not be approved unless at least thirty (30) days would remain between the date of approval and the later of the expiration date of a time to file a response or the expiration date of the maximum time period, which can be extended under 37 C.F.R. § 1.136(a).

The request meets all the above stated requirements. The request was signed by D. Scott Hemingway, on behalf of himself and all the attorneys/agents of record. There is no outstanding Office action at this time.

The request is **APPROVED**. There are no attorneys/agents of record at this time.

All future communications from the Office will be directed Mark Downey, at the below address, until otherwise notified by applicant.

Inquiries related to this decision should be directed to Edward Westin at (571) 272-1638.

Edward Westin

Edward Westin, Special Programs Examiner
Technology Center 2800
Semiconductors, Electrical and Optical
Systems and Components

cc: Mark Downey
Bell & Nunnally, PLLC
1400 One McKinney Plaza
3232 Mckinney Ave.
Dallas, TX 75204-2429

UNITED STATES PATENT AND TRADEMARK OFFICE

COMMISSIONER FOR PATENTS
UNITED STATES PATENT AND TRADEMARK OFFICE
P.O. BOX 1450
ALEXANDRIA, VA 22313-1450
www.uspto.gov

Brinks Hofer Gilson & Lione
P.O. Box 10395
Chicago IL 60610

COPY MAILED

MAY 04 2007

OFFICE OF PETITIONS

In re Application	:	
Yoda	:	
Application No. 10/614,544	:	PATENT TERM ADJUSTMENT
Filed: July 7, 2003	:	
Dkt. No.: 9281-4583	:	

This is a decision on the "REQUEST FOR RECONSIDERATION OF PATENT TERM ADJUSTMENT," filed December 18, 2006. This matter is being treated under 37 CFR 1.705(b) as an application for patent term adjustment (PTA).

Applicants herein have not disputed the patent term adjustment (PTA) accorded to date (576 days). Instead, the instant application for patent term adjustment requests reconsideration of the patent term adjustment as it relates to the Office's failure to issue the patent within three years of the filing date of the application. A decision is being **held in abeyance** until after the actual patent date. Knowledge of the actual date the patent issues is required to calculate the amount, if any, of additional patent term for Office failure to issue the patent within three years. *See*, 37 CFR 1.703(b).

Applicant is given **TWO (2) MONTHS** from the issue date of the patent to file a written request for reconsideration of the patent term adjustment for Office failure to issue the patent within three years. A copy of this decision should accompany the request. Applicant may seek such consideration without payment of an additional fee. However, as to all other bases for seeking reconsideration of the patent term adjustment indicated in the patent, all requirements of 37 CFR 1.705(d) must be met. Requests for reconsideration on other bases must be timely filed and must include payment of the required fee.

Applicant is reminded that if an application is entitled to an adjustment under 35 USC 154(b)(1)(B), the entire period during which the application was pending (except for periods excluded under 35 USC 154(b)(1)(B)(i)-(iii)), and not just the period beginning three years after the actual filing date of the application, is the period of delay under 35 USC 154(b)(1)(B) in

determining whether periods of delay overlap under 35 USC 154(b)(2)(A).

Thus, any days of delay for Office issuance of the patent more than three years after the filing date of the application which overlap with the days of patent term adjustment accorded prior to the issuance of the patent will not result in any additional patent term adjustment. *See*, 35 USC 154(b)(1)(B), 35 USC 154(b)(2)(A), and 37 CFR § 1.703(f). *See, also, Revision of Patent Term Extension and Patent Term Adjustment Provisions; Final Rule*, 69 Fed. Reg. 21704 (April 22, 2004).

The Office acknowledges receipt of the required application fee of $200.00. No additional fee will be required if applicants are solely requesting reconsideration of additional time related to failing to issue the patent within three years in accordance with 37 CFR 1.702(b).

This application is being forwarded to the Office of Patent Publication for processing into a patent.

Telephone inquiries specific to this matter should be directed to Petitions Attorney Alesia M. Brown at (571) 272-3205.

Kery A Fries

Kery Fries
Senior Legal Advisor
Office of Patent Legal Administration
Office of Deputy Commissioner
for Patent Examination Policy

UNITED STATES PATENT AND TRADEMARK OFFICE

Commissioner for Patents
United States Patent and Trademark Office
P.O. Box 1450
Alexandria, VA 22313-1450
www.uspto.gov

Sally J. Brown
3350 Airport Road
Ogden, Utah 85505

In re Patent No. KENT BARKER ET AL. Appl. No.: 10/614,577 Filed July 7, 2003 For: Electrical Connection Apparatus and Method For an Airbag Inflator	**DECISION ON PETITION** *37 CFR 1.144*

Applicant filed a "PETITION TO THE DIRECTOR UNDER 37 CFR § 1.144" on July 29, 2004. This paper will be treated as a "request for clarification."

A restriction requirement was mailed on June 9, 2004. In response, the Applicant filed petition to the Director to review the election requirement and requested to vacate the same.

The Applicant asserts that the Examiner required an election between fifteen different groups of species. Each group of species represents alternative, but closely related features of the disclosed embodiments and requiring Applicants to make multiple elections between fifteen different groups of species of closely related embodiments of the claimed invention is inequitable. The Applicant further asserts that requiring Applicant to make multiple elections between fifteen different groups of closely related subject matter requires Applicant to review in detail the specification and claims and identify all claims that read on each group of species. Essentially, the Examiner is shifting the burden of examination onto the Applicants. The Examiner has required an election between any alternative embodiments of the present invention. Such a requirement is overly restrictive and burdensome. The Examiner should not be permitted to shift the burden of examination upon the Applicants, when it can easily be examined at one time because of the relatedness of each disclosed alternative embodiment of the present invention.

The Applicant further asserts that requiring an election between fifteen different groups of alternative features of the present invention may unnecessarily delay issuance of the claimed

subject matter and may significantly increase the monetary burden on Applicants in prosecuting the claims.

Title 37 C.F.R. § 1.144 sets forth the requirements for a Petition from the requirement for restriction.

> § 1.144 Petition from requirement for restriction.
> After a final requirement for restriction, the applicant, in addition to making any reply due on the remainder of the action, may petition the Commissioner to review the requirement. Petition may be deferred until after final action on or allowance of claims to the invention elected, but must be filed not later than appeal. A petition will not be considered if reconsideration of the requirement was not requested (see § 1.181).

In regards to Applicant's assertion that an election between any alternative embodiments of present invention is overly restrictive and burdensome and that the examiner should not be permitted to shift the burden of examination upon the Applicant, when it can be examined at one time because of the relatedness of each disclosed alternative embodiment of the present invention. M.P.E.P. 803 states that "an application may properly be required to be restricted to one of two or more claimed inventions only if they are able to support separate patents and they are either independent (MPEP § 806.04 - § 806.04(i)) or distinct (MPEP § 806.05 - § 806.05(i))." The instant application contains four distinct inventions. As such, restricting the application to one invention is proper for search and examination. MPEP 803 further states "[i]f the search and examination of an entire application can be made without serious burden, the examiner must examine it on the merits, even though it includes claims to independent or distinct inventions." In this particular situation, there is clearly a serious burden on the examiner to search and examine the entire application since the claims contain such divergent subject matter and the search for the invention of one group would not be required for the invention of the other groups.

Since the disclosed species are closely related, the restriction on that basis is hereby withdrawn. However, a review of claims indicates that the inventions are disclosed as combination, subcombination, method for connecting, and method for manufacturing. In view of this relationship among these inventions, the restriction requirement has been modified as attached.

Applicant's remarks with respect to the previous restriction requirement have been fully considered, but are not persuasive.

As it is indicated in the attached Election/Restriction requirement, the inventions of Groups I-IV have been shown to be related, but patentably distinct. Further, the burden to the examiner has been shown by the different classification of the inventions and the different searches required for the inventions.

Upon receipt of proper reply to the election/restriction requirement, the case will be forwarded to the Examiner for continued prosecution on the merits.

Any enquiry concerning this petition should be directed to Tulsidas C. Patel, Supervisory Patent Examiner, at (571) 272 2098.

Tulsidas C. Patel
Supervisory Patent Examiner
Art Unit 2839

UNITED STATES PATENT AND TRADEMARK OFFICE

Commissioner for Patents
United States Patent and Trademark Office
P.O. Box 1450
Alexandria, VA 22313-1450
www.uspto.gov

Law Offices of Mark A. Garzia, P.C.
2058 Chichester Ave
Boothwyn, PA 19061

MAILED

JAN 3 1 2005

Director's Office
Group 3700

In re Application of
Jonathan D. Douglas
Serial No. : 10/614,598
Filed : July 7, 2003
For : Estimating Evaporation Airflow in Vapor Compression Cycle Cooling Equipment

: DECISION ON PETITION TO WITHDRAW ABANDONMENT

This is a decision on petitioner's request filed November 26, 2004, to review the holding of abandonment mailed October 21, 21004 for failure to pay the required issue fee per the Notice of Allowance and Fee(s) Due mailed June 8, 2004. There is no fee required for this petition.

In support of the request, petitioner has submitted a copy of a response (a Request for Continued Examination (RCE) that included an Information Disclosure Statement), and a copy of a PTO stamped receipt dated July 2, 2004. The RCE request was timely filed as it was filed within the three-month period set for paying the issue fee.

In view of the above, the Notice of Abandonment mailed October 21, 2004, is in error and is hereby vacated. The holding of abandonment is withdrawn. Upon the mailing of this decision, the application will be forwarded to the Examiner via the Legal Instruments Examiner for entry, processing and consideration of the RCE.

Summary: Holding of Abandonment Withdrawn.

Richard A. Bertsch, Director
Technology Group 3700
Phone: (571) 272-3750

ak/1/28/05

SPE RESPONSE FOR CERTIFICATE OF CORRECTION

Paper No.: _____

DATE : 1-22-07

TO SPE OF : ART UNIT 2614

SUBJECT : Request for Certificate of Correction for Appl. No.: 10/614611 Patent No.: 7136469

Please respond to this request for a certificate of correction within 7 days.

Please review the requested changes/corrections as shown in the **COCIN** document(s) in the IFW application image. No new matter should be introduced, nor should the scope or meaning of the claims be changed.

Please check COls.

Please complete the response (see below) and forward the completed response to scanning using document code **COCX**.

Certificates of Correction Branch

703-308-9390 ext. 117

Thank You For Your Assistance

The request for issuing the above-identified correction(s) is hereby:

Note your decision on the appropriate box.

- ☑ **Approved** — All changes apply.
- ☐ **Approved in Part** — Specify below which changes do not apply.
- ☐ **Denied** — State the reasons for denial below.

Comments: _____

CURTIS KUNTZ
SUPERVISORY PATENT EXAMINER
TECHNOLOGY CENTER 2600
SPE

2614
Art Unit

UNITED STATES PATENT AND TRADEMARK OFFICE

COMMISSIONER FOR PATENTS
UNITED STATES PATENT AND TRADEMARK OFFICE
P.O. BOX 1450
ALEXANDRIA, VA 22313-1450
www.uspto.gov

Paper No. ____

KNOBBE MARTENS OLSON & BEAR LLP
2040 MAIN STREET
FOURTEENTH FLOOR
IRVINE, CA 92614

COPY MAILED

MAR 2 5 2004

OFFICE OF PETITIONS

In re Application of	:	
Shaoping Li et al	:	
Application No. 10/614,622	:	DECISION GRANTING PETITION
Filed: July 7, 2003	:	UNDER 37 CFR 313(c)(2)
Attorney Docket No. MICRON.198C1DV1	:	

This is a decision on the petition, filed March 22, 2004, under 37 CFR 1.313(c)(2) to withdraw the above-identified application from issue after payment of the issue fee.

The petition is **GRANTED**.

The above-identified application is withdrawn from issue for consideration of a submission under 37 CFR 1.114 (request for continued examination). See 37 CFR 1.313(c)(2).

Petitioner is advised that the issue fee paid on March 1, 2004 in the above-identified application cannot be refunded. If, however, the above-identified application is again allowed, petitioner may request that it be applied towards the issue fee required by the new Notice of Allowance.[1]

Telephone inquiries should be directed to the undersigned at (703) 305-8680.

This matter is being referred to Technology Center AU 2812 for processing of the request for continued examination under 37 CFR 1.114 and for consideration of the concurrently filed Information Disclosure Statement.

Frances Hicks
Petitions Examiner
Office of Petitions
Office of the Deputy Commissioner
for Patent Examination Policy

---

[1] The request to apply the issue fee to the new Notice may be satisfied by completing and returning the new Issue Fee Transmittal Form PTOL-85(b), which includes the following language thereon: "Commissioner for Patents is requested to apply the Issue Fee and Publication Fee (if any) or re-apply any previously paid issue fee to the application identified above." Petitioner is advised that, whether a fee is indicated as being due or not, the Issue Fee Transmittal Form **must** be completed and timely submitted to avoid abandonment. Note the language in bold text on the first page of the Notice of Allowance and Fee(s) Due (PTOL-85).

UNITED STATES PATENT AND TRADEMARK OFFICE

Commissioner for Patents
United States Patent and Trademark Office
P.O. Box 1450
Alexandria, VA 22313-1450
www.uspto.gov

KNOBBE MARTENS OLSON & BEAR LLP
2040 MAIN STREET
FOURTEENTH FLOOR
IRVINE, CA 92614

MAILED

OCT 08 2009

OFFICE OF PETITIONS

In re Application of :
Arnold I. Klayman :
Application No. 10/614,623 : ON PETITION
Filed: July 7, 2003 :
Attorney Docket No. SRSLABS.053C3

This is a decision on the petition, filed October 2, 2009 and supplemented on October 7, 2009 under 37 CFR 1.313(c)(2) to withdraw the above-identified application from issue after payment of the issue fee.

The petition is **GRANTED**.

The above-identified application is withdrawn from issue for consideration of a submission under 37 CFR 1.114 (request for continued examination). See 37 CFR 1.313(c)(2).

Petitioner is advised that the issue fee paid on September 22, 2009 in the above-identified application cannot be refunded. If, however, the above-identified application is again allowed, petitioner may request that it be applied towards the issue fee required by the new Notice of Allowance.[1]

Telephone inquiries should be directed to Irvin Dingle at (571) 272-3210.

This matter is being referred to Technology Center AU 2614 for processing of the request for continued examination under 37 CFR 1.114 and for consideration of the concurrently filed amendment.

/Irvin Dingle/
Irvin Dingle
Petitions Examiner
Office of Petitions

---

[1] The request to apply the issue fee to the new Notice may be satisfied by completing and returning the new Issue Fee Transmittal Form PTOL-85(b), which includes the following language thereon: Commissioner for Patents is requested to apply the Issue Fee and Publication Fee (if any) or re-apply any previously paid issue fee to the application identified above. Petitioner is advised that, whether a fee is indicated as being due or not, the Issue Fee Transmittal Form **must** be completed and timely submitted to avoid abandonment. Note the language in bold text on the first page of the Notice of Allowance and Fee(s) Due (PTOL-85).

UNITED STATES PATENT AND TRADEMARK OFFICE

Commissioner for Patents
United States Patent and Trademark Office
P.O. Box 1450
Alexandria, VA 22313-1450
www.uspto.gov

KNOBBE MARTENS OLSON & BEAR LLP
2040 MAIN STREET
FOURTEENTH FLOOR
IRVINE, CA 92614

MAILED

OCT 08 2009

OFFICE OF PETITIONS

In re Application of :
Arnold I. Klayman :
Application No. 10/614,623 : ON PETITION
Filed: July 7, 2003 :
Attorney Docket No. SRSLABS.053C3

This is a decision on the petition, filed October 2, 2009 and supplemented on October 7, 2009 under 37 CFR 1.313(c)(2) to withdraw the above-identified application from issue after payment of the issue fee.

The petition is **GRANTED**.

The above-identified application is withdrawn from issue for consideration of a submission under 37 CFR 1.114 (request for continued examination). See 37 CFR 1.313(c)(2).

Petitioner is advised that the issue fee paid on September 22, 2009 in the above-identified application cannot be refunded. If, however, the above-identified application is again allowed, petitioner may request that it be applied towards the issue fee required by the new Notice of Allowance.[1]

Telephone inquiries should be directed to Irvin Dingle at (571) 272-3210.

This matter is being referred to Technology Center AU 2614 for processing of the request for continued examination under 37 CFR 1.114 and for consideration of the concurrently filed amendment.

/Irvin Dingle/
Irvin Dingle
Petitions Examiner
Office of Petitions

---

[1] The request to apply the issue fee to the new Notice may be satisfied by completing and returning the new Issue Fee Transmittal Form PTOL-85(b), which includes the following language thereon: Commissioner for Patents is requested to apply the Issue Fee and Publication Fee (if any) or re-apply any previously paid issue fee to the application identified above. Petitioner is advised that, whether a fee is indicated as being due or not, the Issue Fee Transmittal Form **must** be completed and timely submitted to avoid abandonment. Note the language in bold text on the first page of the Notice of Allowance and Fee(s) Due (PTOL-85).

UNITED STATES PATENT AND TRADEMARK OFFICE

UNITED STATES DEPARTMENT OF COMMERCE
United States Patent and Trademark Office
Address: COMMISSIONER FOR PATENTS
P.O. Box 1450
Alexandria, Virginia 22313-1450
www.uspto.gov

KNOBBE MARTENS OLSON & BEAR LLP
2040 MAIN STREET
FOURTEENTH FLOOR
IRVINE, CA 92614

Mail Date: 05/25/2010

Applicant	: Arnold I. Klayman	: DECISION ON REQUEST FOR
Patent Number	: 7636443	: RECALCULATION of PATENT
Issue Date	: 12/22/2009	: TERM ADJUSTMENT IN VIEW
Application No	: 10/614,623	: OF WYETH AND NOTICE OF INTENT TO
Filed	: 07/07/2003	: ISSUE CERTIFICATE OF CORRECTION
		:

The Request for Recalculation is **GRANTED** to the extent indicated.

The patent term adjustment has been determined to be **1398** days. The USPTO will *sua sponte* issue a certificate of correction reflecting the amount of PTA days determined by the recalculation.

Prior to the issuance of the certificate of correction, the USPTO will afford patentee an opportunity to be heard and request reconsideration. Accordingly, patentee has **one month or thirty (30) days**, whichever is longer, to file a request for reconsideration of this patent term adjustment calculation. See 35 U.S.C. 154(b)(3)(B)(ii) and 37 CFR 1.322(a)(4). No extensions of time will be granted under 37 CFR 1.136.

Patentee should use document code PET.OP if electronically filing a request for reconsideration of this patent term adjustment calculation. The patentee must also include the information required by 37 CFR 1.705(b)(2) and the fee required by 37 CFR 1.18(e). If patentee does not file a timely request for reconsideration of this patent term adjustment calculation including the information required by 37 CFR 1.705(b)(2) and the fee required by 37 CFR 1.18(e), the USPTO will issue a certificate of correction reflecting the PTA determination noted above.

Patentee should be aware that in order to preserve the right to review in the United States District Court for the District of Columbia of the USPTO patent term adjustment determination, patentee must ensure that he or she also take the steps required under 35 U.S.C. 154(b)(4)(A) in a timely manner. Nothing in the request for recalculation should be construed as providing an alternative time frame for commencing a civil action under 35 U.S.C. 154(b)(4)(A).

Any questions concerning this decision should be directed to the Office of Patent Legal Administration at 571-272-7702.

UNITED STATES PATENT AND TRADEMARK OFFICE

Commissioner for Patents
United States Patent and Trademark Office
P.O. Box 1450
Alexandria, VA 22313-1450
www.uspto.gov

COPY MAILED
JUL 25 2006
OFFICE OF PETITIONS

Daniel L. Dawes
Myers Dawes and Andras LLP
19900 MacArthur Blvd Ste 1150
Irvine, CA 92612

In re Application of	:	
Gregory Z. Jigamian	:	
Application No. 10/614,635	:	DECISION ON PETITION
Filed: July 7, 2003	:	TO WITHDRAW
Attorney Docket No. XEN-1	:	FROM RECORD
	:	

This is a decision on the Request to Withdraw as attorney or agent of record under 37 C.F.R. § 1.36(b), filed September 22, 2005.

The request is **NOT APPROVED** as moot.

A review of the file record indicates that the power of attorney to Daniel L. Dawes has been revoked by the Jonathan M. Darcy of the patent application on May 30, 2006. Accordingly, the request to withdraw under 37 C.F.R. § 1.36(b) is moot.

All future communications from the Office will continue to be directed to the below-listed address until otherwise notified by applicant.

Telephone inquires concerning this decision should be directed to Cheryl Gibson-Baylor at (571)272- 3213.

Cheryl Gibson-Baylor

Cheryl Gibson-Baylor
Petitions Examiner
Office of Petitions

Conferee: AA

cc: Plevy & Howard, P.C.
P.O. Box 226
Fort Washington, PA 19034

UNITED STATES PATENT AND TRADEMARK OFFICE

NOV 27 2006

Commissioner for Patents
United States Patent and Trademark Office
P.O. Box 1450
Alexandria, VA 22313-1450
www.uspto.gov

DANIEL M. CHAMBER
BIO TECHNOLOGY LAW GROUP
658 MARSOLAN AVENUE
SOLANA BEACH CA 92075-1931

In re Application of	:
Salvatore Albani	:
Serial No.: 10/614,639	: PETITION DECISION
Filed: July 7, 2003	:
Attorney Docket No.: AND-1001-DV2	:

This is a decision on the PETITION FOR ACCEPTANCE OF COLOR DRAWINGS UNDER 37 CFR 1.84(a)(2). The petition was filed October 20, 2006. Entry of color drawings requires: 1) three sets of the color drawings, 2) a proper amendment to the specification indicating color photographs or drawings are present in the file, and 3) the required fee under 37 CFR 1.17(h).

A review of the application record indicates that the petition meets all of the requirements for acceptance of color drawings. This is not to be construed that all of the drawings are accepted, only that the color drawings are acceptable.

However the amendment to the specification should be presented as a separate paper, not in the body of the petition. Applicant is requested to make this correction in the next communication with the Office.

The petition is **GRANTED**.

Should there be any questions with respect to this decision, please contact William R. Dixon, Jr., by mail addressed to: Director, Technology Center 1600, at the address listed above, or by telephone at 571-272-0519 or by facsimile transmission at 571-273-8300.

for George Elliott
Director, Technology Center 1600

UNITED STATES PATENT AND TRADEMARK OFFICE

Commissioner for Patents
United States Patent and Trademark Office
P.O. Box 1450
Alexandria, VA 22313-1450
www.uspto.gov

HUGHES TELEMATICS, INC.
41 PERIMETER CENTER EAST, SUITE 400
ATLANTA GA 30346

COPY MAILED

DEC 1 1 2008

OFFICE OF PETITIONS

In re Application of
Larkin Hill Lowrey et al.
Application No. 10/614,665
Filed: July 7, 2003
Attorney Docket No. **0308816.0156**

DECISION ON PETITION
UNDER § 1.183

This is a decision in response to the petition filed July 28, 2008, under 37 CFR § 1.183 for waiver of the requirement under 37 CFR § 1.131 that all of the inventors sign the declaration of prior inventorship.

The petition under 37 CFR 1.183 is **GRANTED**.

The above-identified application was filed on January 4, 2005, with a 37 CFR 1.63 declaration signed by all of the inventors. With the instant petition, applicants filed a 37 CFR § 1.131 declaration. The 37 CFR § 1.131 declaration was executed by all the joint inventors except Chuck Myers. Applicants have filed the instant petition to have the 37 CFR § 1.131 declaration accepted as signed by all inventors on their own behalf and on behalf of non-signing inventor Chuck Myers.

37 CFR 1.131 states, in pertinent part:

> When any claim of an application or a patent under reexamination is rejected, the inventor of the subject matter of the rejected claim, the owner of the patent under reexamination, or the party qualified under §§ 1.42, 1.43, or 1.47, may submit an appropriate oath or declaration to establish invention of the subject matter of the rejected claim prior to the effective date of the reference or activity on which the rejection is based.

In addition, the Manual of Patent Examining Procedure states that "an application or declaration by less than all named inventors of an application is accepted where it is shown that less than all named inventors of an application invented the subject matter of the claim or claims under rejection."

Here, there has not been a party qualified under 37 CFR 1.42, 1.43, or 1.47. In

application invented the subject matter of the claims under rejection. Accordingly, the proper parties to sign the 37 CFR § 1.131 declaration include all of the joint inventors.

In order for a petition under 37 CFR § 1.183 to be granted to waive this requirement that joint inventor Myers sign the 37 CFR § 1.131 declaration, petitioner must demonstrate that this is an extraordinary situation where justice requires waiver of the rules.

On instant petition, applicants have set forth the steps taken to obtain joint inventor Myers' signature on the37 CFR § 1.131 declaration. Applicants have shown that a bona fide effort was made to reach or locate inventor Sadegh to present the 37 CFR § 1.131 declaration and supporting documentation. The declaration presented is signed by the remaining joint inventors. Under the circumstances, it is concluded that petitioner has demonstrated that this is an extraordinary situation, warranting waiver of the rules.

Petitioner's deposit account no. 11-1110 has been charged for the RCE, the extension of time and the petition under 37 CFR 1.1183.

The petition is granted to the extent that the 37 CFR § 1.131 declaration may be entered, despite the fact that its requirement that all of the inventors sign the declaration has not been satisfied. This is not a decision on the merits of the declaration.

This matter is being referred to Technology Center 3664 for consideration on the merits of the reply and the 37 CFR § 1.131 declaration, filed July 28, 2008.

Telephone inquiries concerning this matter may be directed to the undersigned Petitions Attorney at (571) 272-3212.

Patricia Faison-Ball

Patricia Faison-Ball
Senior Petitions Attorney
Office of Petitions

UNITED STATES PATENT AND TRADEMARK OFFICE

Commissioner for Patents
United States Patent and Trademark Office
P.O. Box 1450
Alexandria, VA 22313-1450
www.uspto.gov

BAKER & MCKENZIE, LLP
PATENT DEPARTMENT
2001 ROSS AVENUE
SUITE 2300
DALLAS, TX 75201

COPY MAILED

JUN 21 2006

OFFICE OF PETITIONS

In re Application of	:	
Lin, et. al.	:	DECISION ON REQUEST
Application No. 10/614,676	:	TO WITHDRAW FROM
Filed: July 4, 2003	:	RECORD
Attorney Docket No. 68146241-005011	:	

This is a decision on the request to withdraw as attorney or agent of record under 37 CFR § 1.36(b), filed by facsimile transmission on January 26, 2006.

The request to withdraw as attorney or agent is **NOT APPROVED** as moot.

A review of the file record indicates that on January 12, 2006, the power of attorney to all the attorneys or agents associated with Customer No. 23562 were revoked by the intervening assignee of the patent application. Accordingly, the request to withdraw under 37 CFR § 1.36(b) is moot.

The correspondence address of record has been changed and the new correspondence address is the address indicated below.

This application file is being referred to Technology Center Art Unit 2112 for further processing.

Telephone inquires concerning this decision should be directed to Andrea Smith at (571) 272- 3226.

Andrea Smith
Petitions Examiner
Office of Petitions

Conferee:

cc: TOLER SCHAFFER, LLP
5000 PLAZA ON THE LAKES
SUITE 265
AUSTIN, TX 78746

UNITED STATES PATENT AND TRADEMARK OFFICE

COMMISSIONER FOR PATENTS
UNITED STATES PATENT AND TRADEMARK OFFICE
P.O. BOX 1450
ALEXANDRIA, VA 22313-1450
WWW.USPTO.GOV

Paper No. None

TOLER SCHAFFER, LLP
8500 BLUFFSTONE COVE
SUITE A201
AUSTIN TX 78759

COPY MAILED

SEP 04 2007

OFFICE OF PETITIONS

In re Application of Chin-Long Lin et al. Application No. 10/614,676 Filed: July 7, 2003 Attorney Docket No.: 1087-PROT005011 Title: MEMORY BUS ASSIGNMENT FOR FUNCTIONAL DEVICES IN AN AUDIO/VIDEO SIGNAL PROCESSING SYSTEM	DECISION ON PETITION PURSUANT TO 37 C.F.R. § 1.182

This is a decision on the petition filed August 17, 2007, requesting that the above-identified application be accorded a different filing date than that which was originally accorded.

The application was filed on July 4, 2003, and was physically received in the Office on July 7, 2003.

37 C.F.R. § 1.10(a) sets forth, *in toto*:

> (1) Any correspondence received by the U.S. Patent and Trademark Office (USPTO) that was delivered by the "Express Mail Post Office to Addressee" service of the United States Postal Service (USPS) will be considered filed with the USPTO on the date of deposit with the USPS.
> (2) The date of deposit with USPS is shown by the "date in" on the "Express Mail" label or other official USPS notation. If the USPS deposit date cannot be determined, the correspondence will be accorded the USPTO receipt date as the filing date. See § 1.6(a).

As such, if an applicant deposits an application with the **United States** Postal Service (USPS), and mails the application via the

Express Mail service of the same, the Office will accord the application a filing date which is the same date as when the application was deposited with the USPS.

With the present petition, Petitioner has asserted that on July 4, 2003, the present application was deposited not with the USPS, but rather with the ROC (Taiwan) Postal System, and the present application was mailed via "ROC (Taiwan) Post Express Mail Service." To evince this assertion, Petitioner has included what appears to be the Taiwanese equivalent of an Express Mail Label. It is noted that this label bears the same serial number as that which appears on the Transmittal Sheet that was included on filing.

It appears that the present application was deposited with a Postal System that was other than the USPS. As such, Rule § 1.10(a) is not applicable, and the Office should have accorded the actual date of receipt as the filing date. Accordingly, the petition is **GRANTED**.

No petition fee is necessary, and the $400.00 petition fee has not been charged to Petitioner's Deposit Account.

The Office of Initial Patent Examination (OIPE) will be notified of this decision so that the application may receive further processing with a filing date of July 7, 2003.

OIPE will issue a corrected filing receipt.

OIPE will then notify the Office of Patent Publications of this decision (a Notice of Allowance and Issue Fee Due was mailed on June 28, 2007 - as of the mailing of this decision, neither the issue nor the publication fee has been received.)

The general phone number for OIPE is 571-272-4000. The general phone number for the Office of Patent Publication at 571-272-4200. Telephone inquiries regarding this decision should be directed to the undersigned at (571) 272-3225.

Paul Shanoski
Senior Attorney
Office of Petitions
United States Patent and Trademark Office

UNITED STATES PATENT AND TRADEMARK OFFICE

COMMISSIONER FOR PATENTS
UNITED STATES PATENT AND TRADEMARK OFFICE
P.O. BOX 1450
ALEXANDRIA, VA 22313-1450
www.uspto.gov

KLAUBER & JACKSON
411 HACKENSACK AVENUE
HACKENSACK, NJ 07601

COPY MAILED

MAR 26 2007

OFFICE OF PETITIONS

In re Application of	:	
ROMASCHIN et al	:	
Application No.: 10/614,678	:	DECISION ON PETITION
Filing Date: July 7, 2003	:	UNDER 37 CFR 1.55
Attorney Docket No.: 1148-1-002 CIPF	:	

This is a decision on the petition under 37 CFR 1.55(c), filed November 2, 2006, for acceptance of an unintentionally delayed claim under 35 U.S.C. 119(a)-(d) for benefit of the filing date of foreign Application No. CA 2,097,952, filed June 8, 1993.

The petition is **DISMISSED**.

The present nonprovisional application was filed after November 29, 2000, and did not include a reference to the foreign application, for which benefit is now sought, within the later of four months from the actual filing date of the application or sixteen months from the filing date of the prior foreign application. Therefore, since the claim for priority is submitted after the period specified in 37 CFR 1.55(a)(1)(i), this is an appropriate petition under the provisions of 37 CFR 1.55(c).

A petition under 37 CFR 1.55(c) to accept an unintentionally delayed claim for priority requires:

(1) the claim submitted with the petition must identify the prior foreign application for which priority is claimed, as well as any foreign application for the same subject matter and having a filing date before that of the application for which priority is claimed, by the application number, country, and the filing date and be included either in an oath or declaration (37 CFR 1.63(c)(2)) or in an Application Data Sheet (37 CFR 1.76(b)(6);
(2) the surcharge as set forth in 37 CFR 1.17(t); and
(3) a statement that the entire delay between the date the claim was due under 37 CFR 1.55(a)(1) and the date the claim was filed was unintentional. (The Director may require additional information where there is a question whether the delay was unintentional.)

The instant petition fails to comply with item (1) above. In this regard, a review of the file record fails to disclose that the priority information was included in an oath or declaration or in an Application Data Sheet in accordance with 37 CFR 1.76(b)(6). Unless provided in an application data sheet, 37 CFR 1.63(c)(2) requires that the oath or declaration must identify the foreign application for patent or inventor's certificate for which priority is claimed under 37 CFR 1.55, and any foreign applications having a filing date before that of the application on which priority is claimed, by specifying the application number, country, day, month, and year of its filing. Note MPEP 201.14, page 200-84 (Rev. 5, August 2006), last paragraph, second column.

In view of the above, compliance with 37 CFR 1.63(c)(2) or 37 CFR 1.76(b)(6) must be satisfied if applicant desires to claim priority to the foreign application noted in the petition. Any future petition should include a cover letter and be entitled "Renewed Petition under 37 CFR 1.55(c)."

Applicant is further advised that the amendments to the specification filed on July 9, 2004 and August 18, 2006 are improper. Specifically, the specification has been amended to state that U.S. Application No. 08/257,627 "is a national stage entry pursuant to 35 USC 111 of PCT/CA94/00325". However, a review of Office records indicates that U.S. Application No. 08/257,627 is not a national stage entry of international application number PCT/CA94/00325. Thus, any reference to U.S. Application No. 08/257,627 as a national stage entry of international application number PCT/CA94/00325 would be inappropriate. Additionally, applicant is directed to the new matter concerns set forth in the Office action mailed February 21, 2006.

With regard to item (3) above, the petition states that "the entire delay between the date the priority claim was due under (a)(1) and the date claim was filed (first on July 7, 2004 in an Amendment and Response and second on this date) was unintentional." This statement is interpreted as a statement that the entire delay between the date the claim was due under 37 CFR 1.55(a)(1) and the date the claim was filed was unintentional. If this is an incorrect interpretation in view of the rules, petitioner is required to provide a statement to that effect.

Further correspondence with respect to this matter should be addressed as follows:

By mail: Mail Stop PETITIONS
Commissioner for Patents
Post Office Box 1450
Alexandria, VA 22313-1450

By hand: Customer Service Window
Mail Stop Petitions
Randolph Building
401 Dulany Street
Alexandria, VA 22314

By fax: (571) 273-8300
ATTN: Office of Petitions

Any questions concerning this matter may be directed to Bryan Lin at (571) 272-3303.

Bryan Lin
Legal Examiner
Office of PCT Legal Administration

Boris Milef
Legal Examiner
Office of Petitions

UNITED STATES PATENT AND TRADEMARK OFFICE

COMMISSIONER FOR PATENTS
UNITED STATES PATENT AND TRADEMARK OFFICE
P.O. BOX 1450
ALEXANDRIA, VA 22313-1450
www.uspto.gov

KLAUBER & JACKSON
411 HACKENSACK AVENUE
HACKENSACK, NJ 07601

COPY MAILED

MAY 18 2007

OFFICE OF PETITIONS

In re Application of	:	
ROMASCHIN et al	:	
Application No.: 10/614,678	:	DECISION ON PETITION
Filing Date: July 7, 2003	:	UNDER 37 CFR 1.55
Attorney Docket No.: 1148-1-002 CIPF	:	

This is a decision on the renewed petition under 37 CFR 1.55(c), filed April 30, 2007, for acceptance of an unintentionally delayed claim under 35 U.S.C. 119(a)-(d) for benefit of the filing date of foreign Application No. CA 2,097,952, filed June 8, 1993.

The petition is **GRANTED**.

The present nonprovisional application was filed after November 29, 2000, and did not include a reference to the foreign application, for which benefit is now sought, within the later of four months from the actual filing date of the application or sixteen months from the filing date of the prior foreign application. Therefore, since the claim for priority is submitted after the period specified in 37 CFR 1.55(a)(1)(i), this is an appropriate petition under the provisions of 37 CFR 1.55(c).

A petition under 37 CFR 1.55(c) to accept an unintentionally delayed claim for priority requires:

(1) the claim submitted with the petition must identify the prior foreign application for which priority is claimed, as well as any foreign application for the same subject matter and having a filing date before that of the application for which priority is claimed, by the application number, country, and the filing date and be included either in an oath or declaration (37 CFR 1.63(c)(2)) or in an Application Data Sheet (37 CFR 1.76(b)(6);

(2) the surcharge as set forth in 37 CFR 1.17(t); and

(3) a statement that the entire delay between the date the claim was due under 37 CFR 1.55(a)(1) and the date the claim was filed was unintentional. (The Director may require additional information where there is a question whether the delay was unintentional.)

On April 30, 2007, an executed declaration was received which identifies the foreign application for which priority is claimed by application number, country, and filing date. The required surcharge set forth in 37 CFR 1.17(t) was submitted on November 2, 2006. Lastly, the petition contains an adequate statement of unintentional delay.

A Corrected Filing Receipt which reflects the above-noted foreign priority application accompanies this decision.

This application is being referred to Technology Center AU 1645 for continued examination in due course and for consideration by the examiner of record of the foreign priority claim under 35 U.S.C. 119(a)-(d).

Any questions concerning this matter may be directed to Bryan Lin at (571) 272-3303.

Bryan Lin
Legal Examiner
Office of PCT Legal Administration

Boris Milef
Legal Examiner
Office of Petitions

ATTACHMENT: Corrected Filing Receipt

UNITED STATES PATENT AND TRADEMARK OFFICE

UNITED STATES DEPARTMENT OF COMMERCE
United States Patent and Trademark Office
Address: COMMISSIONER FOR PATENTS
P.O. Box 1450
Alexandria, Virginia 22313-1450
www.uspto.gov

APPL NO.	FILING OR 371(c) DATE	ART UNIT	FIL FEE REC'D	ATTY.DOCKET NO	TOT CLMS	IND CLMS
10/614,678	07/07/2003	1645	900	1148-1-002 CIPF	20	3

CONFIRMATION NO. 7389

CORRECTED FILING RECEIPT

OC000000023934573

23565
KLAUBER & JACKSON
411 HACKENSACK AVENUE
HACKENSACK, NJ 07601

Date Mailed: 05/17/2007

Receipt is acknowledged of this regular Patent Application. It will be considered in its order and you will be notified as to the results of the examination. Be sure to provide the U.S. APPLICATION NUMBER, FILING DATE, NAME OF APPLICANT, and TITLE OF INVENTION when inquiring about this application. Fees transmitted by check or draft are subject to collection. Please verify the accuracy of the data presented on this receipt. **If an error is noted on this Filing Receipt, please mail to the Commissioner for Patents P.O. Box 1450 Alexandria Va 22313-1450. Please provide a copy of this Filing Receipt with the changes noted thereon. If you received a "Notice to File Missing Parts" for this application, please submit any corrections to this Filing Receipt with your reply to the Notice. When the USPTO processes the reply to the Notice, the USPTO will generate another Filing Receipt incorporating the requested corrections (if appropriate).**

Applicant(s)

Alexander D. Romaschin, Etobicoke, CANADA;
Paul M. Walker, Toronto, CANADA;

Power of Attorney: The patent practitioners associated with Customer Number **23565**.

Domestic Priority data as claimed by applicant

This application is a CIP of 09/585,582 06/02/2000 ABN
which is a CIP of 09/353,189 07/14/1999 PAT 6,306,614
and is a CIP of 09/457,465 12/08/1999 PAT 6,203,997
which is a CON of 08/991,230 12/16/1997 ABN
which is a CIP of 08/552,145 11/02/1995 PAT 5,804,370
which is a CIP of 08/516,204 08/17/1995 ABN
which is a CIP of 08/257,627 06/08/1994 ABN

Foreign Applications

CANADA 2097952 06/08/1993

If Required, Foreign Filing License Granted: 10/02/2003

The country code and number of your priority application, to be used for filing abroad under the Paris Convention, is US10/614,678

Projected Publication Date: Not Applicable

Non-Publication Request: No

Early Publication Request: No

Title

Measurement of analytes

Preliminary Class

435

PROTECTING YOUR INVENTION OUTSIDE THE UNITED STATES

Since the rights granted by a U.S. patent extend only throughout the territory of the United States and have no effect in a foreign country, an inventor who wishes patent protection in another country must apply for a patent in a specific country or in regional patent offices. Applicants may wish to consider the filing of an international application under the Patent Cooperation Treaty (PCT). An international (PCT) application generally has the same effect as a regular national patent application in each PCT-member country. The PCT process **simplifies** the filing of patent applications on the same invention in member countries, but **does not result** in a grant of "an international patent" and does not eliminate the need of applicants to file additional documents and fees in countries where patent protection is desired.

Almost every country has its own patent law, and a person desiring a patent in a particular country must make an application for patent in that country in accordance with its particular laws. Since the laws of many countries differ in various respects from the patent law of the United States, applicants are advised to seek guidance from specific foreign countries to ensure that patent rights are not lost prematurely.

Applicants also are advised that in the case of inventions made in the United States, the Director of the USPTO must issue a license before applicants can apply for a patent in a foreign country. The filing of a U.S. patent application serves as a request for a foreign filing license. The application's filing receipt contains further information and guidance as to the status of applicant's license for foreign filing.

Applicants may wish to consult the USPTO booklet, "General Information Concerning Patents" (specifically, the section entitled "Treaties and Foreign Patents") for more information on timeframes and deadlines for filing foreign patent applications. The guide is available either by contacting the USPTO Contact Center at 800-786-9199, or it can be viewed on the USPTO website at http://www.uspto.gov/web/offices/pac/doc/general/index.html.

For information on preventing theft of your intellectual property (patents, trademarks and copyrights), you may wish to consult the U.S. Government website, http://www.stopfakes.gov. Part of a Department of Commerce initiative, this website includes self-help "toolkits" giving innovators guidance on how to protect intellectual property in specific countries such as China, Korea and Mexico. For questions regarding patent enforcement issues, applicants may call the U.S. Government hotline at 1-866-999-HALT (1-866-999-4158).

LICENSE FOR FOREIGN FILING UNDER
Title 35, United States Code, Section 184
Title 37, Code of Federal Regulations, 5.11 & 5.15

GRANTED

The applicant has been granted a license under 35 U.S.C. 184, if the phrase "IF REQUIRED, FOREIGN FILING LICENSE GRANTED" followed by a date appears on this form. Such licenses are issued in all applications where the conditions for issuance of a license have been met, regardless of whether or not a license may be required as

set forth in 37 CFR 5.15. The scope and limitations of this license are set forth in 37 CFR 5.15(a) unless an earlier license has been issued under 37 CFR 5.15(b). The license is subject to revocation upon written notification. The date indicated is the effective date of the license, unless an earlier license of similar scope has been granted under 37 CFR 5.13 or 5.14.

This license is to be retained by the licensee and may be used at any time on or after the effective date thereof unless it is revoked. This license is automatically transferred to any related applications(s) filed under 37 CFR 1.53(d). This license is not retroactive.

The grant of a license does not in any way lessen the responsibility of a licensee for the security of the subject matter as imposed by any Government contract or the provisions of existing laws relating to espionage and the national security or the export of technical data. Licensees should apprise themselves of current regulations especially with respect to certain countries, of other agencies, particularly the Office of Defense Trade Controls, Department of State (with respect to Arms, Munitions and Implements of War (22 CFR 121-128)); the Bureau of Industry and Security, Department of Commerce (15 CFR parts 730-774); the Office of Foreign Assets Control, Department of Treasury (31 CFR Parts 500+) and the Department of Energy.

NOT GRANTED

No license under 35 U.S.C. 184 has been granted at this time, if the phrase "IF REQUIRED, FOREIGN FILING LICENSE GRANTED" DOES NOT appear on this form. Applicant may still petition for a license under 37 CFR 5.12, if a license is desired before the expiration of 6 months from the filing date of the application. If 6 months has lapsed from the filing date of this application and the licensee has not received any indication of a secrecy order under 35 U.S.C. 181, the licensee may foreign file the application pursuant to 37 CFR 5.15(b).

UNITED STATES PATENT AND TRADEMARK OFFICE

Commissioner for Patents
United States Patent and Trademark Office
P.O. Box 1450
Alexandria, VA 22313-1450
www.uspto.gov

KNOBBE MARTENS OLSON & BEAR LLP
2040 MAIN STREET
FOURTEENTH FLOOR
IRVINE, CA 92614

COPY MAILED

JUN 06 2008

OFFICE OF PETITIONS

In re Application of :
Markus Weber et al :
Application No. 10/614,680 :
Filed: July 3, 2003 :
Attorney Docket No. FLGDK16.001AUS

ON PETITION

This is a decision on the petition, filed June 3, 2008 under 37 CFR 1.313(c)(2) to withdraw the above-identified application from issue after payment of the issue fee.

The petition is **GRANTED**.

The above-identified application is withdrawn from issue for consideration of a submission under 37 CFR 1.114 (request for continued examination). See 37 CFR 1.313(c)(2).

Petitioner is advised that the issue fee paid on May 21, 2008 in the above-identified application cannot be refunded. If, however, the above-identified application is again allowed, petitioner may request that it be applied towards the issue fee required by the new Notice of Allowance.[1]

Telephone inquiries should be directed to Irvin Dingle at (571) 272-3210.

This matter is being referred to Technology Center AU 1797 for processing of the request for continued examination under 37 CFR 1.114 and for consideration of the concurrently filed Information Disclosure Statement.

Irvin Dingle
Petitions Examiner
Office of Petitions

---

[1] The request to apply the issue fee to the new Notice may be satisfied by completing and returning the new Issue Fee Transmittal Form PTOL-85(b), which includes the following language thereon: Commissioner for Patents is requested to apply the Issue Fee and Publication Fee (if any) or re-apply any previously paid issue fee to the application identified above. Petitioner is advised that, whether a fee is indicated as being due or not, the Issue Fee Transmittal Form **must** be completed and timely submitted to avoid abandonment. Note the language in bold text on the first page of the Notice of Allowance and Fee(s) Due (PTOL-85).

UNITED STATES PATENT AND TRADEMARK OFFICE

Commissioner for Patents
United States Patent and Trademark Office
P.O. Box 1450
Alexandria, VA 22313-1450
www.uspto.gov

Myers Dawes Andras & Sherman, LLP
19900 MacArthur Blvd.
Suite 1150
Irvine, CA 92612

COPY MAILED

SEP 29 2008

OFFICE OF PETITIONS

In re Application of	:	
Yeoshua Shachar	:	
Application No. 10/614,685	:	DECISION ON PETITION
Filed: July 3, 2003	:	TO WITHDRAW
Attorney Docket No. PHA3.PAU.01	:	FROM RECORD
	:	

This is a decision on the Request to Withdraw as attorney or agent of record under 37 C.F.R. § 1.36(b), filed August 29, 2008.

The request is **APPROVED**.

A grantable request to withdraw as attorney/agent of record must be signed by every attorney/agent seeking to withdraw or contain a clear indication that one attorney is signing on behalf of another/others. A request to withdraw will not be approved unless at least 30 (thirty) days would remain between the date of approval and the later of the expiration date of a time to file a response or the expiration date of the maximum time period which can be extended under 37 C.F.R. § 1.136(a).

The request was signed by Joseph C. Andras on behalf of all attorneys of record. All attorneys/agents have been withdrawn. Applicant is reminded that there is no attorney of record at this time.

The correspondence address of record has been changed and the new correspondence address is the address indicated below.

There is an outstanding Office action mailed September 3, 2008 that requires a reply from the applicant.

Telephone inquiries concerning this decision should be directed to Terri Williams at 571-272-2991.

Terri Williams
Petitions Examiner
Office of Petitions

cc: **Law Offices of Daniel L. Dawes**
5200 Warner Blvd, Suite 106
Huntington Beach, CA 92649

UNITED STATES PATENT AND TRADEMARK OFFICE

UNITED STATES DEPARTMENT OF COMMERCE
United States Patent and Trademark Office
Address: COMMISSIONER FOR PATENTS
P.O. Box 1450
Alexandria, Virginia 22313-1450
www.uspto.gov

APPLICATION NUMBER	FILING OR 371(C) DATE	FIRST NAMED APPLICANT	ATTY. DOCKET NO./TITLE
10/614,685	07/03/2003	Yehoshua Shachar	PHA3.PAU.01

CONFIRMATION NO. 7408

POWER OF ATTORNEY NOTICE

23386
MYERS DAWES ANDRAS & SHERMAN, LLP
19900 MACARTHUR BLVD.
SUITE 1150
IRVINE, CA 92612

OC000000032310834

Date Mailed: 09/29/2008

NOTICE REGARDING CHANGE OF POWER OF ATTORNEY

This is in response to the Power of Attorney filed 08/29/2008.

- The withdrawal as attorney in this application has been accepted. Future correspondence will be mailed to the new address of record. 37 CFR 1.33.

/tswilliams/

Office of Data Management, Application Assistance Unit (571) 272-4000, or (571) 272-4200, or 1-888-786-0101

UNITED STATES PATENT AND TRADEMARK OFFICE

UNITED STATES DEPARTMENT OF COMMERCE
United States Patent and Trademark Office
Address: COMMISSIONER FOR PATENTS
P.O. Box 1450
Alexandria, Virginia 22313-1450
www.uspto.gov

APPL NO.	FILING OR 371 (c) DATE	ART UNIT	FIL FEE REC'D	ATTY.DOCKET NO	DRAWINGS	TOT CLMS	IND CLMS
10/614,702	07/03/2003	1654	750	00-078-D	11	14	1

CONFIRMATION NO. 7957

CORRECTED FILING RECEIPT

OC000000014042555

A. Blair Hughes
McDonnell Boehnen Hulbert & Berghoff
32nd Floor
300 S. Wacker Drive
Chicago, IL 60606

Date Mailed: 10/08/2004

Receipt is acknowledged of this regular Patent Application. It will be considered in its order and you will be notified as to the results of the examination. Be sure to provide the U.S. APPLICATION NUMBER, FILING DATE, NAME OF APPLICANT, and TITLE OF INVENTION when inquiring about this application. Fees transmitted by check or draft are subject to collection. Please verify the accuracy of the data presented on this receipt. **If an error is noted on this Filing Receipt, please write to the Office of Initial Patent Examination's Filing Receipt Corrections, facsimile number 703-746-9195. Please provide a copy of this Filing Receipt with the changes noted thereon. If you received a "Notice to File Missing Parts" for this application, please submit any corrections to this Filing Receipt with your reply to the Notice. When the USPTO processes the reply to the Notice, the USPTO will generate another Filing Receipt incorporating the requested corrections (if appropriate).**

Applicant(s)

Luiz Belardinelli, Menlo Park, CA;
Brent K. Blackburn, Los Altos, CA;
Zhenhai Gao, San Jose, CA;

Assignment For Published Patent Application

CV Therapeutics, Inc.

Power of Attorney: The patent practitioners associated with Customer Number **020306**.

Domestic Priority data as claimed by applicant

This application is a CON of 09/792,617 02/23/2001 ABN
which claims benefit of 60/219,876 07/21/2000
and claims benefit of 60/184,296 02/23/2000

Foreign Applications

If Required, Foreign Filing License Granted: 10/02/2003

The number of your priority application, to be used for filing abroad under the Paris Convention is,
US10/614,702

Projected Publication Date: Not Applicable

Non-Publication Request: No

Early Publication Request: No

Title

Method of identifying partial agonists of the A2A receptor

Preliminary Class

435

LICENSE FOR FOREIGN FILING UNDER
Title 35, United States Code, Section 184
Title 37, Code of Federal Regulations, 5.11 & 5.15

GRANTED

The applicant has been granted a license under 35 U.S.C. 184, if the phrase "IF REQUIRED, FOREIGN FILING LICENSE GRANTED" followed by a date appears on this form. Such licenses are issued in all applications where the conditions for issuance of a license have been met, regardless of whether or not a license may be required as set forth in 37 CFR 5.15. The scope and limitations of this license are set forth in 37 CFR 5.15(a) unless an earlier license has been issued under 37 CFR 5.15(b). The license is subject to revocation upon written notification. The date indicated is the effective date of the license, unless an earlier license of similar scope has been granted under 37 CFR 5.13 or 5.14.

This license is to be retained by the licensee and may be used at any time on or after the effective date thereof unless it is revoked. This license is automatically transferred to any related applications(s) filed under 37 CFR 1.53(d). This license is not retroactive.

The grant of a license does not in any way lessen the responsibility of a licensee for the security of the subject matter as imposed by any Government contract or the provisions of existing laws relating to espionage and the national security or the export of technical data. Licensees should apprise themselves of current regulations especially with respect to certain countries, of other agencies, particularly the Office of Defense Trade Controls, Department of State (with respect to Arms, Munitions and Implements of War (22 CFR 121-128)); the Office of Export Administration, Department of Commerce (15 CFR 370.10 (j)); the Office of Foreign Assets Control, Department of Treasury (31 CFR Parts 500+) and the Department of Energy.

NOT GRANTED

No license under 35 U.S.C. 184 has been granted at this time, if the phrase "IF REQUIRED, FOREIGN FILING LICENSE GRANTED" DOES NOT appear on this form. Applicant may still petition for a license under 37 CFR 5.12, if a license is desired before the expiration of 6 months from the filing date of the application. If 6 months has lapsed from the filing date of this application and the licensee has not received any indication of a secrecy order under 35 U.S.C. 181, the licensee may foreign file the application pursuant to 37 CFR 5.15(b).

UNITED STATES PATENT AND TRADEMARK OFFICE

Commissioner for Patents
United States Patent and Trademark Office
P.O. Box 1450
Alexandria, VA 22313-1450
www.uspto.gov

Paul B. McKee
26 Dogwood Circle
Boynton Beach, FL 33436

COPY MAILED

NOV 16 2005

OFFICE OF PETITIONS

In re Application of
Paul B. McKee
Application No. 10/614,705
Filed: July 7, 2003
For: Dual Flush Toilet Valve

DECISION ON PETITION

This is a decision on the petition filed on October 6, 2005, and again on October 13, 2005, which is being treated as a feeless petition under 37 CFR 1.181, to withdraw the holding of abandonment.

On December 14, 2004, the USPTO mailed petitioner a nonfinal Office Action, which set a three-month shortened statutory period for reply. On January 14, 2005, petitioner submitted an amendment in response to the nonfinal Office Action. On February 10, 2005, the USPTO mailed petitioner a Notice of Non-Compliant Amendment, stating that the amendment to the claims filed on January 14, 2005, is considered non-compliant because it failed to meet the requirements of 37 CFR 1.121. The Notice set a one-month extendable period from the mailing of the Notice within which to submit a compliant amendment. On March 11, 2005, the application became abandoned for failure to submit a timely reply to the Notice of Non-Compliant Amendment. On September 2, 2005, the USPTO mailed petitioner a Notice of Abandonment.

PETITION UNDER 37 CFR 1.181:

In the present petition, petitioner stated: "I have no intention of abandonment but every request for change does not seem to get thru to him (Robert Fetsuga – Examiner). I have made every change that he has asked for and sent back to him within 7 days." Petitioner further stated that he sent a package to the examiner on September 9, 2005, but the package was returned to him. Petitioner submitted a copy of the returned envelope, addressed to the USPTO at an address no longer in use, as well a copy of his previous letters to the examiner.

After reviewing the documents submitted by petitioner and the application file, it appears that the USPTO did indeed receive petitioner's previous letters to the examiner. However, it does not appear that any of these letters included an amendment in compliance with 37 CFR 1.121. Moreover, petitioner did not submit a compliant amendment in response to the Notice of Non-Compliant

Amendment with the present petition. A copy of the Notice of Non-Compliant Amendment dated February 10, 2005, and a written explanation of the amendment format required by 37 CFR 1.121 accompany this decision for petitioner's convenience.

In view of the above, the petition to withdraw the holding of abandonment is **dismissed**.

The Office strongly suggests that petitioner file a petition under 37 CFR 1.137(b) to revive the application. A grantable petition pursuant to 37 CFR 1.137(b) must be accompanied by:

(1) The required reply to the outstanding Notice of Non-Compliant Amendment in the form of an amendment in compliance with 37 CFR 1.121.

(2) **The petition fee in the amount of $750.00;**

(3) A statement that the entire delay in filing the required reply from the due date for the reply until the filing of a grantable petition pursuant to this paragraph was unintentional. The Director may require additional information where there is a question whether the delay was unintentional.

For petitioner's convenience, a form for filing a petition under 37 CFR 1.137(b) is enclosed.

Before the application can be revived, petitioner must submit a completed petition form, a $750.00 fee, and a compliant amendment to the USPTO as indicated below. Petitioner may wish to seek the advice of a registered patent attorney or agent to assist him in this matter and in prosecuting this application. Additionally, petitioner may wish to contact the Inventors Assistance Center at 800-786-9199 or 571-272-1000.

Correspondence with respect to this matter should be addressed as follows:

By mail: Mail Stop Petition
Commissioner for Patents
P.O. Box 1450
Alexandria, VA 22313-1450

By FAX: (571) 273-8300
Attn: Office of Petitions

By hand: Customer Service Window
Randolph Building
401 Dulany Street
Alexandria, VA 22314

Telephone inquiries should be directed to the undersigned at (571) 272-3211.

Christina Tartera Donnell

Christina Tartera Donnell
Senior Petitions Attorney
Office of Petitions

Enclosures: PTO/SB/64 - Petition For Revival Of An Application For Patent Abandoned Unintentionally, Privacy Act Statement, Notice of Non-Compliant Amendment, and Revised Amendment Practice Flyer

UNITED STATES PATENT AND TRADEMARK OFFICE

UNDER SECRETARY OF COMMERCE FOR INTELLECTUAL PROPERTY AND
DIRECTOR OF THE UNITED STATES PATENT AND TRADEMARK OFFICE
WASHINGTON, DC 20231
www.uspto.gov

JUN 16 2005

JOHN K. BUCHE
P.O. BOX 131025
HOUSTON, TX 77219

In re application of
Gary-Michael Dahl
Application No. 10/614/725 :
Filed: July 07, 2003 :
For: MULTI-FUNCTIONAL CONVERTIBLE TRANSPORT CART :

DECISION ON REQUEST FOR WITHDRAWAL OF ATTORNEY

This is a decision on the renewed request filed on November 30, 2004, under 37 CFR 1.36 and MPEP 402.06, requesting permission to withdraw as the attorney of record in the above-identified application. The delay in treating this request is sincerely regretted.

The request is **NOT APPROVED as MOOT**.

Under 37 CFR 1.36 an attorney may withdraw only upon application to and approval by the Commissioner. It should be noted that a withdrawal is effective when approved, not when filed. Besides giving due notice to his or her client and delivering to the client all papers and property to which the client is entitled as specified under 37 CFR 10.40, approval of such a request requires that the following conditions be met:

A) Each attorney of record must sign the notice of withdrawal, or the notice must contain a clear indication of one attorney signing on behalf of another, because the Office does not recognize law firms;

B) A proper reason for the withdrawal as enumerated in 37 CFR 10.40(b) or subsection (1)-(6) of 37 CFR 10.40(c) must be provided; and

C) If withdrawal is requested in accordance with 37 CFR 10.40(c) above, there must be at least 30 days between approval of the withdrawal and the later of the expiration date of a time period for reply or the expiration date of the period which can be obtained by a petition and fee for extension of time under 37 CFR 1.136(a).

The request to withdraw as attorney in the above-identified application is not approved as moot because the power of attorney has already been changed as per the Notice regarding Change of Power of Attorney mailed May 10, 2005.

Kenneth J. Dorner
Special Programs Examiner
Patent Technology Center 3600
(571) 272-6587
Facsimile No.: (703) 872-9306

KJD/slb: 05/26/05

cc: Harrison & Egbert
412 Main Street
7th Floor
Houston, TX 77002

UNITED STATES PATENT AND TRADEMARK OFFICE

UNITED STATES DEPARTMENT OF COMMERCE
United States Patent and Trademark Office
Address: COMMISSIONER FOR PATENTS
P.O. Box 1450
Alexandria, Virginia 22313-1450
www.uspto.gov

Straub & Pokotylo
788 Shrewsbury Avenue
Tinton Falls, NJ 07724

Mail Date: 05/25/2010

Applicant	: Georges R. Harik	: DECISION ON REQUEST FOR
Patent Number	: 7647299	: RECALCULATION of PATENT
Issue Date	: 01/12/2010	: TERM ADJUSTMENT IN VIEW
Application No	: 10/614,736	: OF WYETH AND NOTICE OF INTENT TO
Filed	: 06/30/2003	: ISSUE CERTIFICATE OF CORRECTION
		:

The Request for Recalculation is **GRANTED** to the extent indicated.

The patent term adjustment has been determined to be **425** days. The USPTO will *sua sponte* issue a certificate of correction reflecting the amount of PTA days determined by the recalculation.

Prior to the issuance of the certificate of correction, the USPTO will afford patentee an opportunity to be heard and request reconsideration. Accordingly, patentee has **one month or thirty (30) days**, whichever is longer, to file a request for reconsideration of this patent term adjustment calculation. See 35 U.S.C. 154(b)(3)(B)(ii) and 37 CFR 1.322(a)(4). No extensions of time will be granted under 37 CFR 1.136.

Patentee should use document code PET.OP if electronically filing a request for reconsideration of this patent term adjustment calculation. The patentee must also include the information required by 37 CFR 1.705(b)(2) and the fee required by 37 CFR 1.18(e). If patentee does not file a timely request for reconsideration of this patent term adjustment calculation including the information required by 37 CFR 1.705(b)(2) and the fee required by 37 CFR 1.18(e), the USPTO will issue a certificate of correction reflecting the PTA determination noted above.

Patentee should be aware that in order to preserve the right to review in the United States District Court for the District of Columbia of the USPTO patent term adjustment determination, patentee must ensure that he or she also take the steps required under 35 U.S.C. 154(b)(4)(A) in a timely manner. Nothing in the request for recalculation should be construed as providing an alternative time frame for commencing a civil action under 35 U.S.C. 154(b)(4)(A).

Any questions concerning this decision should be directed to the Office of Patent Legal Administration at 571-272-7702.

UNITED STATES PATENT AND TRADEMARK OFFICE

Commissioner for Patents
United States Patent and Trademark Office
P.O. Box 1450
Alexandria, VA 22313-1450
www.uspto.gov

Skadden, Arps, Slate, Meagher & Flom LLP
Attn: Jan Steele
525 University Avenue
Suite 1100
Palo Alto, CA 94301

MAILED

SEP 0 7 2004

Technology Center 2100

In re Application of:
Paul C. KOCHER, et al.
Application No. 10/614,765
Filed: July 7, 2003
For: SELF-PROTECTING DIGITAL CONTENT

DECISION ON REQUEST TO WITHDRAW AS ATTORNEY OR AGENT

This is a decision on the Request to Withdraw from Representation filed June 7, 2004.

A grantable request to withdraw as attorney of record should indicate thereon the present mailing addresses of the attorney(s) who is/are withdrawing from the record and of the applicant. The request for withdrawal must be signed by every attorney seeking to withdraw or contain a clear indication that one attorney is signing on behalf of another/others. A request to withdraw will not be approved unless at least 30 (thirty) days would remain between the date of approval and the later of the expiration date of a time to file a response or the expiration date of the maximum time period which can be extended under 37 C.F.R. § 1.136(a). The effective date of withdrawal being the date of decision and not the date of request. See M.P.E.P. § 402.06. 37 C.F.R. § 1.36 further requires that the applicant or patent owner be notified of the withdrawal of the attorney or agent.

The request is **GRANTED.**

All future communications from the Office will be directed to the below-listed address until otherwise notified by applicant. This correspondence address is provided by the withdrawn attorney(s). Applicant is reminded of the obligation to promptly notify the Patent and Trademark Office (Office) of any change in correspondence address to ensure receipt of all communications from the Office.

Vincent N. Trans
Special Program Examiner
Technology Center 2100
Computer Architecture, Software, and
Information Security
703-305-9750

cc: Edward J. Radlo
Sonnenschein Nath & Rosenthal LLP
685 Market Street, 6th Floor
San Francisco, CA 94105

UNITED STATES PATENT AND TRADEMARK OFFICE

COMMISSIONER FOR PATENTS
UNITED STATES PATENT AND TRADEMARK OFFICE
P.O. BOX 1450
ALEXANDRIA, VA 22313-1450
www.uspto.gov
DW 01-04

WINSTEAD SECHREST & MINICK P.C
400 NORTH ERVAY
P.O. BOX 50784
DALLAS TX 75201

COPY MAILED

JAN 13 2004

OFFICE OF PETITIONS

In re Application of :
Lorraine Faxon Meisner : DECISION GRANTING
Application No. 10/614,768 : PETITION
Filed: 8 July, 2003 :
Attorney Docket No. 41758-P002D1C1 :

This is a decision on the petition styled under 37 CFR 1.182, filed on 1 December, 2003, which is treated as a petition requesting that the above-identified application, without drawings, be accorded a filing date of 8 July, 2003.

The application was filed on 8 July, 2003, without drawings.[1] Accordingly, on 24 October, 2003, Initial Patent Examination Division mailed a "Notice of Incomplete Nonprovisional Application" stating that no filing date had been assigned because the application was deposited without drawings, and requiring drawings be filed if necessary. In response, on 1 December, 2003, petitioners filed a preliminary amendment accompanied by three (3) sheets of drawings and the present petition.

Petitioners concede that the drawings were inadvertently omitted when the present application was filed, but state that the drawings were present in a prior-filed application incorporated by reference in the present application.

It has been PTO practice to treat an application that contains at least one process or method claim as an application for which a drawing is not necessary for an understanding of the invention under 35 U.S.C. 113 (first sentence).[2] A review of the record reveals that Claims 74-101 are method claims. Therefore, the present application is deemed to be an application which does not require a drawing for an understanding of the invention. Accordingly, the application, as filed, is entitled to a filing date.

---

[1] 35 U.S.C. § 113 (first sentence) requires a drawing "where necessary for the understanding of the subject matter sought to be patented."

[2] MPEP 601.01(f).

The petition is granted. Since the petition was necessitated by an error on the part of the USPTO, the petition fee submitted on 1 December, 2003, will be credited to counsel's deposit account, No. 23-2426.

The "Notice of Incomplete Nonprovisional Application" mailed on 24 October, 2003, was sent in error and is hereby vacated.

The application will be processed and examined using only the application papers filed on 8 July, 2003.

Obviously, in view of the incorporation by reference of the prior application, The three (3) sheets of drawings are not new matter if they were a part of the disclosure of the prior application.

The three (3) sheets of drawings will be reviewed by the examiner for new matter.

The application is being forwarded to the Office of Initial Patent Examination for further processing with a filing date of 8 July, 2003, using only the application papers present on filing, and for an indication on the bib-data sheet that no (0) sheets of drawings were present on filing.

Telephone inquiries specific to this matter should be directed to the undersigned at 703.308.6918.

D Wood

Douglas I. Wood
Senior Petitions Attorney
Office of Petitions

UNITED STATES PATENT AND TRADEMARK OFFICE

Commissioner for Patents
United States Patent and Trademark Office
P.O. Box 1450
Alexandria, VA 22313-1450
www.uspto.gov

KELLEY DRYE & WARREN LLP
3050 K ST NW
SUITE 400
WASHINGTON DC 20007

COPY MAILED
SEP 28 2007
OFFICE OF PETITIONS

In re Application of	:	
Hugh H. Trout, III	:	
Application No. 10/614,782	:	ON PETITION
Filed: July 9, 2003	:	
Attorney Docket No. 23660-00654	:	

This is a decision on the petition filed on August 14, 2007, pursuant to 37 CFR 1.137(b), to revive the above-identified application.

The petition is **GRANTED**.

The above-identified application became abandoned for failure to timely file a proper reply to the final Office action mailed on May 5, 2005. This Office action set a shortened statutory period for reply of three months. Applicant filed an Amendment on September 2, 2005, made timely by obtaining a one month extension of time. However, by Advisory Action mailed January 27, 2006, the Examiner informed Applicant that the Amendment would not be entered because it failed to place the application in condition for allowance. No further reply with an extension of time having been received, the application became abandoned on September 6, 2005. A Notice of Abandonment was mailed on July 13, 2007.

With the instant petition, applicant paid the petition fee, submitted the required reply in the form of an RCE, and made the proper statement of unintentional delay.

The matter is being forwarded to Group Art Unit 3731 for consideration of the RCE, filed August 14, 2007.

Telephone inquiries concerning this decision should be directed to the undersigned at (571)272-3207.

Cliff Congo
Petitions Attorney
Office of Petitions

UNITED STATES PATENT AND TRADEMARK OFFICE

Commissioner for Patents
United States Patent and Trademark Office
P.O. Box 1450
Alexandria, VA 22313-1450
www.uspto.gov

Kelley Drye & Warren LLP
3050 K Street, NW
Suite 400
Washington, DC 20007

COPY MAILED

MAY 19 2008

In re Application of	:	
Hugh H. Trout, III	:	
Application No. 10/614,782	:	DECISION ON PETITION
Filed: July 9, 2003	:	TO WITHDRAW
Attorney Docket No.	:	FROM RECORD
	:	

This is a decision on the Request to Withdraw as attorney or agent of record under 37 C.F.R. § 1.36(b), filed January 18, 2008.

The request is **APPROVED.**

A grantable request to withdraw as attorney/agent of record must be signed by every attorney/agent seeking to withdraw or contain a clear indication that one attorney is signing on behalf of another/others. A request to withdraw will not be approved unless at least 30 (thirty) days would remain between the date of approval and the later of the expiration date of a time to file a response or the expiration date of the maximum time period which can be extended under 37 C.F.R. § 1.136(a).

The request was signed by John N. Coulby on behalf of all attorneys of record. All attorneys/agents have been withdrawn. Applicant is reminded that there is no attorney of record at this time.

All future correspondence will be directed to the first named inventor Joe Smith at the address indicated below.

There is an outstanding Office action mailed December 31, 2007 that requires a reply from the applicant.

Telephone inquiries concerning this decision should be directed to Terri Williams at 571-272-2991.

Terri Williams

Terri Williams
Petitions Examiner
Office of Petitions

cc: Hugh H. Trout, III, M.D.
8218 Wisconsin Avenue, Suite 204
Bethesda, MD 20814

UNITED STATES PATENT AND TRADEMARK OFFICE

UNITED STATES DEPARTMENT OF COMMERCE
United States Patent and Trademark Office
Address: COMMISSIONER FOR PATENTS
P.O. Box 1450
Alexandria, Virginia 22313-1450
www.uspto.gov

APPLICATION NUMBER	FILING OR 371(C) DATE	FIRST NAMED APPLICANT	ATTY. DOCKET NO./TITLE
10/614,782	07/09/2003	Hugh H. Trout III	

CONFIRMATION NO. 8569

POWER OF ATTORNEY NOTICE

OC000000030010583

25243
KELLEY DRYE & WARREN LLP
3050 K STREET, NW
SUITE 400
WASHINGTON, DC 20007

Date Mailed: 05/19/2008

NOTICE REGARDING CHANGE OF POWER OF ATTORNEY

This is in response to the Power of Attorney filed 01/18/2008.

- The withdrawal as attorney in this application has been accepted. Future correspondence will be mailed to the new address of record. 37 CFR 1.33.

/tswilliams/

Office of Data Management, Application Assistance Unit (571) 272-4000, or (571) 272-4200, or 1-888-786-0101

UNITED STATES PATENT AND TRADEMARK OFFICE

Commissioner for Patents
United States Patent and Trademark Office
P.O. Box 1450
Alexandria, VA 22313-1450
www.uspto.gov

COPY MAILED

SEP 17 2007

OFFICE OF PETITIONS

WELLS ST. JOHN P.S.
601 W. FIRST AVENUE, SUITE 1300
SPOKANE WA 99201

In re Application of
Segal et al.
Application No. 10/614,807
Filed: July 9, 2003
Attorney Docket Number: H0004116-US

ON PETITION

This is a decision on the petition under 37 CFR 1.137(b), filed September 6, 2007, to revive the above-identified application.

This above-identified application became abandoned for failure to timely file a reply to the non-final Office Action of September 27, 2006. The non-final Office Action set a three (3) month shortened statutory period for reply. No extensions of time were obtained under the provisions of 37 CFR §1.136(a). Accordingly, this application became abandoned on December 28, 2006. A Notice of Abandonment was mailed on April 20, 2007.

The statement of unintentional delay presented in the petition does not comply with the current rule. Pursuant to 37 CFR 1.137(b)(3) a statement that "the entire delay in filing the required reply from the due date for the reply until the filing of a grantable petition pursuant to 37 CFR 1.137(b) was unintentional" is required. However, the statement presented will be accepted and construed as the statement required by 37 CFR 1.137(b)(3). Petitioner must notify the Office if this is **not** a correct interpretation of the statement contained in the instant petition.

This petition is hereby **Granted**.

It is not apparent whether the person signing the statement of unintentional delay was in a position to have firsthand or direct knowledge of the facts and circumstances of the delay at issue. Nevertheless, such statement is being treated as having been made as the result of a reasonable inquiry into the facts and circumstances of such delay. See 37 CFR 10.18(b). In the event that such an inquiry has not been made, petitioner must make such an inquiry. If such inquiry results in the discovery that it is not correct that

the entire delay in filing the required reply from the due date for the reply until the filing of a grantable petition pursuant to 37 CFR 1.137(b) was unintentional, petitioner must notify the Office.

There is no indication that the person signing the present petition was ever given a power of attorney or authorization of agent to prosecute the above-identified application. A courtesy copy of this decision is being mailed to the address given on the petition. However, the Office will mail all future correspondence solely to the address of record.

The office hereby acknowledges the receipt of the amendment submitted with the instant petition.

This application is being referred to Art Unit 1742 for further processing.

Telephone inquiries concerning this matter should be directed to the undersigned at (571) 272-3215.

Charlema R. Grant

Charlema R. Grant
Petitions Attorney
Office of Petitions

cc: Sandra Poteat Thompson
Buchalter Nemer
18400 Von Karman Ave., Suite 800
Irvine, CA 92612

UNITED STATES PATENT AND TRADEMARK OFFICE

Commissioner for Patents
United States Patent and Trademark Office
P.O. Box 1450
Alexandria, VA 22313-1450
www.uspto.gov

MAIL

OCT 3 0 2006

DIRECTOR OFFICE
TECHNOLOGY CENTER 2600

GREENBLUM & BERNSTEIN, P.L.C.
1950 ROLAND CLARKE PLACE
RESTON VA 20191

In re Application of
YASUNAGA, KAZUTOSHI, et al.
Application No. 10/614,834
Filed: July 9, 2003
For: **SPEECH CODER AND SPEECH DECODER**

DECISION ON PETITION TO MAKE SPECIAL

This is a decision on the petition filed August 24, 2006 under Manual of Patent Examination Procedure §708.02, VIII requesting accelerated examination.

The petition under Manual of Patent Examination Procedure §708.02, VIII, must:
(1) be filed prior to receiving any examination by the examiner,
(2) be accompanied by the required fee- $130,
(3) the claims should be directed to a single invention (if it is determined that the claims pertain to more than one invention, then applicant will have to make an election without traverse or forfeit accelerated examination status),
(4) state that a pre-examination search was made, and fully discuss the search method employed, such as classes and subclasses searched, publications, Chemical abstracts, patents, etc. A search made by a foreign patent office satisfies this requirement,
(5) be accompanied by a copy of each of the references most closely related to the subject matter encompassed by the claims if said references are not already of record,
(6) fully discuss the references, pointing out with the particularity required by 37 C.F.R. §1.111 (b) and (c), how the claimed subject matter is patentable over the references.

The petitioner meets all the above-listed requirements. Accordingly, the petition is **GRANTED**.

The application will retain its special status throughout its entire prosecution, including any appeal to the Board of Patent Appeals and Interferences, subject only to diligent prosecution by the applicant. The application file is being forwarded to the examiner for appropriate action in due course.

Kenneth A. Wieder
Special Program Examiner
Technology Center 2600
Communications

UNITED STATES PATENT AND TRADEMARK OFFICE

Commissioner for Patents
United States Patent and Trademark Office
P.O. Box 1450
Alexandria, VA 22313-1450
www.uspto.gov

GREENBLUM & BERNSTEIN, P.L.C.
1950 ROLAND CLARKE PLACE
RESTON VA 20191

COPY MAILED

DEC 0 8 2008

OFFICE OF PETITIONS

In re Patent No. 7,373,295	:	
YASUNAGA et al.	:	LETTER REGARDING PATENT
Issue Date: May 13, 2008	:	TERM ADJUSTMENT AND
Application No. 10/614,834	:	NOTICE OF INTENT TO ISSUE
Filed: July 9, 2003	:	CERTIFICATE OF CORRECTION
Attorney Docket No. P23916	:	

This letter is in response to the "REQUEST FOR CERTIFICATE OF CORRECTION," filed June 10, 2008, which is properly treated as a request that the determination of patent term adjustment under 35 U.S.C. 154(b) be reviewed for accuracy in accordance with patentees' duty of good faith and candor to the Office. Patentees state that the patent term adjustment should be corrected from 832 days to 827 days.

The request for review of the determination of patent term adjustment (PTA) is **GRANTED to the extent indicated herein**.

Patentee is given **TWO (2) MONTHS** from the mailing date of this decision to respond. No extensions of time will be granted under § 1.136.

The patent term adjustment indicated in the patent is to be corrected by issuance of a certificate of correction showing a revised patent term adjustment of **787 days**.

On May 13, 2008, the above-identified application matured into U.S. Patent No. 7,373,295, with a patent term adjustment of 832 days. On June 10, 2008, patentees submitted the instant comment. Patentees assert that they should have been assessed a reduction of 5 days for filing a Request for Continued Examination on September 11, 2007, in excess of the three-month

period from the mailing date of the final Office action pursuant to 37 CFR 1.704(b).

The application history has been reviewed and it has been determined that the number days of applicant delay is incorrect.

A final Office action was mailed on June 6, 2007. Patentees filed their response on September 11, 2007, in excess of the three-month period from the mailing date of the final Office action. See 37 CFR 1.704(b). Thus, patentees failed to engage in reasonable efforts to conclude prosecution of the application. The period of adjustment should have been reduced by 5 days, the number of days in the period beginning on the day after the date that is three months after the date of mailing of the final Office action, September 7, 2007, and ending on the date the reply was filed, September 11, 2007. See 37 CFR 1.704(b). Accordingly, a period of reduction of 5 days will be entered.

Furthermore, patentees should have been assessed a delay pursuant to 37 CFR 1.704(c)(10) for the filing of Information Disclosure Statements on January 4, 2008, and January 10, 2008, after the mailing of the notice of allowance.

37 CFR 1.704 provides:

> (c) Circumstances that constitute a failure of the applicant to engage in reasonable efforts to conclude processing or examination of an application also include the following circumstances, which will result in the following reduction of the period of adjustment set forth in § 1.703 to the extent that the periods are not overlapping.
>
> > (10) Submission of an amendment under § 1.312 or other paper after a notice of allowance has been given or mailed, in which case the period of adjustment set forth in § 1.703 shall be reduced by the lesser of:
> >
> > > (i) The number of days, if any, beginning on the date the amendment under § 1.312 or other paper was filed and ending on the mailing date of the Office action or

notice in response to the amendment under § 1.312 or such other paper;

or

(ii) Four months;

In this instance, it is undisputed that patentees filed Information Disclosure Statements on January 4, 2008, and January 10, 2008, after the mailing of the notice of allowance. A review of both Information Disclosure Statements reveals that patentees did not include a statement under 37 CFR 1.704(d)[1] in either IDS. Thus, under the circumstance of this application, the filing of the Information Disclosure Statements on January 4, 2008, and January 10, 2008, are grounds for reduction under 37 CFR 1.704(c)(10).

The Office responded to both Information Disclosure Statements on February 12, 2008. Pursuant to 37 CFR 1.704(c)(10), a first period of reduction of 40 days should have been entered for the IDS filed January 4, 2008, counting the number of days in the period beginning on the date the IDS was filed, January 4, 2008, and ending on the mailing date of the Office action in response, February 12, 2008. Pursuant to 37 CFR 1.704(c)(10), a second period of reduction of 34 days was warranted for the filing of the second IDS on January 10, 2008, counting the number of days in the period beginning on the date the second IDS was filed, January 10, 2008, and ending on the mailing date of the Office action in response, February 12, 2008. 37 CFR 1.704(c) provides that circumstances that constitute a failure of the applicant to

---

[1] Pursuant to 37 CFR 1.704(d):

> A paper containing only an information disclosure statement in compliance with §§ 1.97 and 1.98 will not be considered a failure to engage in reasonable efforts to conclude prosecution (processing or examination) of the application under paragraphs (c)(6), (c)(8), (c)(9), or (c)(10) of this section if it is accompanied by a statement that each item of information contained in the information disclosure statement was first cited in any communication from a foreign patent office in a counterpart application and that this communication was not received by any individual designated in § 1.56(c) more than thirty days prior to the filing of the information disclosure statement. This thirty-day period is not extendable.

engage in reasonable efforts to conclude processing or examination of an application … will result in the following reduction of the period of adjustment set forth in § 1.703 to the extent that the periods are not overlapping. The second period of reduction of 34 days pursuant to 37 CFR 1.704(c)(10) totally overlaps with the first period of reduction of 40 days.

Accordingly, a single period of reduction of 40 days is being entered for these two periods of reduction.

In view thereof, the patent should have issued with a revised patent term adjustment of **787 days** (832 days of Office delay - 45 days of applicant delay).

As this letter was submitted as an advisement to the Office of an error in patentee's favor, the Office will not assess the $200.00 fee under 37 CFR 1.18(e). The Office thanks patentees for patentees' good faith and candor in bringing this to the attention of the Office. Furthermore, the $100.00 certificate of correction fee is unnecessary and will be refunded to patentees' credit card.

The application is being forwarded to the Certificates of Correction Branch for issuance of a certificate of correction in order to rectify this error. The Office will issue a certificate of correction indicating that the term of the above-identified patent is extended or adjusted by **787 days**.

Telephone inquiries specific to this matter should be directed to Christina Tartera Donnell, Senior Petitions Attorney, at (571) 272-3211.

Nancy Johnson
Senior Petitions Attorney
Office of Petitions

Enclosure: Copy of DRAFT Certificate of Correction

DRAFT COPY

UNITED STATES PATENT AND TRADEMARK OFFICE

CERTIFICATE OF CORRECTION

PATENT : 7,373,295 B2

DATED : May 13, 2008

INVENTOR(S) : Yasunaga et al.

It is certified that error appears in the above-identified patent and that said Letters Patent is hereby corrected as shown below:

On the cover page,

[*] Notice: Subject to any disclaimer, the term of this patent is extended or adjusted under 35 USC 154(b) by (832) days

Delete the phrase "by 832 days" and insert – by 787 days--

SPE RESPONSE FOR CERTIFICATE OF CORRECTION

Paper No.: _____

DATE : 2/10/09

TO SPE OF : ART UNIT 2626

SUBJECT : Request for Certificate of Correction for Appl. No.: 10614834 Patent No.: 7373295 B2

Please respond to this request for a certificate of correction within 7 days.

FOR IFW FILES:

Please review the requested changes/corrections as shown in the COCIN document(s) in the IFW application image. No new matter should be introduced, nor should the scope or meaning of the claims be changed.

Please complete the response (see below) and forward the completed response to scanning using document code COCX.

FOR PAPER FILES:

Please review the requested changes/corrections as shown in the attached certificate of correction. Please complete this form (see below) and forward it with the file to:

Certificates of Correction Branch (CofC)
South Tower - 9A22
Palm Location 7580

You can fax the Directors/SPE response to 571-270-9990

LAMONTE NEWSOME
Certificates of Correction Branch
703-308-9390 ext. 112

Thank You For Your Assistance

The request for issuing the above-identified correction(s) is hereby:
Note your decision on the appropriate box.

- ☒ Approved — All changes apply.
- ☐ Approved in Part — Specify below which changes do not apply.
- ☐ Denied — State the reasons for denial below.

Comments: _____

/Angela A. Armstrong/ 2626
Primary Examiner

SPE RESPONSE FOR CERTIFICATE OF CORRECTION

SPE Art Unit

UNITED STATES PATENT AND TRADEMARK OFFICE

Commissioner for Patents
United States Patent and Trademark Office
P.O. Box 1450
Alexandria, VA 22313-1450
www.uspto.gov

COPY MAILED
OCT 30 2006
OFFICE OF PETITIONS

LAW OFFICES OF CHRISTOPHER L. MAKAY
1634 Milam Building
115 East Travis Street
San Antonio TX 78205

In re Application of	:	
HAWKINS et al.	:	DECISION
Application No. 10/614,842	:	ON PETITION
Filed: July 8, 2003	:	
Attorney Docket No. L-0170.41(CON)	:	

This is a decision on the petition filed August 3, 2006, which is being treated as a request under 37 CFR 1.181 (no fee) for withdrawal of the holding of abandonment of the above-identified application.

The petition under 37 CFR 1.181 is **GRANTED**. Any possible holding of abandonment is vacated, and this application restored to pending status.

The application purportedly became abandoned for failure to reply in a timely manner to a non-final Office action mailed July 13, 2004, which set a shortened statutory period for reply of three (3) months. A Notice of Abandonment has not been mailed. The petition states that a response to the July 13, 2004 office action was transmitted to the Office by facsimile on August 9, 2004 and includes a copy of the previously transmitted amendment. Page 5 of the amendment includes a certificate of transmittal that the correspondence was faxed on August 9, 2004. A copy of the sending unit's report confirming transmission was also included. Petitioner also provided an explanation of how petitioner became aware that the Office had no evidence of receipt of the August 9, 2006 amendment on August 2, 2006, and a statement from petitioner, which attests to the satisfaction of the Director to the previous timely transmission on August 9, 2004. Accordingly, the evidence submitted adequately satisfies the requirements of 37 CFR 1.8(b), and the amendment is considered timely filed. Any possible holding of abandonment is withdrawn, and this application is recognized as never having been abandoned in the first instance.

Telephone inquiries concerning this decision should be directed to Denise Pothier at (571) 272-4787.

The application matter is being forwarded to Office of Patent Publications.

Frances Hicks
Petitions Examiner
Office of Petitions

UNITED STATES PATENT AND TRADEMARK OFFICE

Commissioner for Patents
United States Patent and Trademark Office
P.O. Box 1450
Alexandria, VA 22313-1450
www.uspto.gov

COPY MAILED

JAN 17 2008

OFFICE OF PETITIONS

GENENTECH, INC.
1 DNA WAY
SOUTH SAN FRANCISCO, CA 94080

COPY MAILED

JAN 17 2008

OFFICE OF PETITIONS

In re Application of :
Henry Chiu et al :
Application No. 10/614,853 :
Filed: July 8, 2003 :
Attorney Docket No. P1973R1 :

ON PETITION

This is a decision on the petition under 37 CFR 1.137(b), filed September 17, 2007, to revive the above-identified application.

The petition is **GRANTED**.

The above-identified application became abandoned for failure to reply in a timely manner to the non-final Office action mailed February 23, 2007, which set a shortened statutory period for reply of three (3) months. No extension of time under the provisions of 37 CFR 1.136(a) were obtained. Accordingly, the above-identified application became abandoned on May 24, 2007.

An extension of time under 37 CFR 1.136 must be filed prior to the expiration of the maximum extendable period for reply. See In re Application of S., 8 USPQ2d 1630, 1631 (Comm'r Pats. 1988). Accordingly, since the $1020 extension of time submitted with the petition on September 17, 2007 was subsequent to the maximum extendable period for reply, this fee is unnecessary and will be credited to petitioner's deposit account.

The file does not indicate a change of address has been submitted, although the address given on the petition differs from the address of record. If appropriate, a change of address should be filed in accordance with MPEP 601.03. A courtesy copy of this decision is being mailed to the address given on the petition; however, the Office will mail all future correspondence solely to the address of record.

Telephone inquiries concerning this decision should be directed to Irvin Dingle at (571) 272-3210.

This matter is being referred to Technology Center AU 1647 for further processing.

Irvin Dingle
Petitions Examiner
Office of Petitions

cc: Ginger R. Dreger
Heller Ehrman LLP
275 Middlefield Road
Menlo Park, CA 94025

UNITED STATES PATENT AND TRADEMARK OFFICE

Commissioner for Patents
United States Patent and Trademark Office
P.O. Box 1450
Alexandria, VA 22313-1450
www.uspto.gov

OLIFF & BERRIDGE PLC
P O BOX 19928
ALEXANDRIA, VA 22320

COPY MAILED
JUN 06 2006
OFFICE OF PETITIONS

In re Application of
Koichiro Nakatani
Application No. 10/614,903
Filed: July 9, 2003
Attorney Docket No. 115914

: DECISION GRANTING PETITION
: UNDER 37 CFR 1.313(c)(2)

This is a decision on the petition, filed June 5, 2006, under 37 CFR 1.313(c)(2) to withdraw the above-identified application from issue after payment of the issue fee.

The petition is **GRANTED**.

The above-identified application is withdrawn from issue for consideration of a submission under 37 CFR 1.114 (request for continued examination). See 37 CFR 1.313(c)(2).

Petitioner is advised that the issue fee paid on April 24, 2006 in the above-identified application cannot be refunded. If, however, the above-identified application is again allowed, petitioner may request that it be applied towards the issue fee required by the new Notice of Allowance.[1]

Telephone inquiries should be directed to the undersigned at (571) 272-3218.

This matter is being referred to Technology Center AU 3748 for processing of the request for continued examination under 37 CFR 1.114 and for consideration of the Information Disclosure Statement.

Frances Hicks
Petitions Examiner
Office of Petitions

C:\Documents and Settings\FHicks\My Documents\470\June9\614903.wpd

---

[1] *The request to apply the issue fee to the new Notice may be satisfied by completing and returning the new Part B – Fee(s) Transmittal Form (along with any balance due at the time of submission), which includes the following language thereon: "The Director of the USPTO is requested to apply the Issue Fee and Publication Fee (if any) or to re-apply any previously paid issue fee in the application identified above. Petitioner is advised that, whether a fee is indicated as being due or not, the Issue Fee Transmittal Form* ***must*** *be completed and timely submitted to avoid abandonment. Note the language in bold text on the first page of the Notice of Allowance and Fee(s) Due (PTOL-85).*

SPE RESPONSE FOR CERTIFICATE OF CORRECTION

Paper No.: _____

DATE : 10-18-07

TO SPE OF : ART UNIT 2624

SUBJECT : Request for Certificate of Correction for Appl. No.: 10/614917 Patent No.: 7120287

Please respond to this request for a certificate of correction within 7 days.

Please review the requested changes/corrections as shown in the COCIN document(s) in the IFW application image. No new matter should be introduced, nor should the scope or meaning of the claims be changed.

Please check Drawings

Please complete the response (see below) and forward the completed response to scanning using document code **COCX**.

Certificates of Correction Branch

703-308-9390 ext. _____

Thank You For Your Assistance

The request for issuing the above-identified correction(s) is hereby:

Note your decision on the appropriate box.

- [x] Approved — All changes apply.
- [ ] Approved in Part — Specify below which changes do not apply.
- [ ] Denied — State the reasons for denial below.

Comments: Claim scope not affected.

BRIAN WERNER
~~SUPERVISORY PATENT EXAMINER~~
SPE

2624
Art Unit

UNITED STATES PATENT AND TRADEMARK OFFICE

Commissioner for Patents
United States Patent and Trademark Office
P.O. Box 1450
Alexandria, VA 22313-1450
www.uspto.gov

BUSKOP LAW GROUP, P.C.
1717 ST. JAMES PLACE
SUITE 500
HOUSTON TX 77056

In re Application of	:
Pearson et al.	:
Serial No.: 10/614,925	: PETITION TO MAKE SPECIAL
Filed: July 8, 2003	:
Attorney Docket No.: 1067.08	:

This is in response to applicants' petition filed July 8, 2003, to make the above-identified application special under the provisions of 37 CFR 1.102(c), based on the age of the applicant. No fee is required for this petition. The delay in acting upon this petition is regretted.

Applicant has satisfied the provisions set forth in M.P.E.P. 708.02, IV. Therefore, the petition is **GRANTED**.

The application will be forwarded to the examiner for action on the merits commensurate with this decision.

Should there be any questions with regard to this letter please contact Marianne C. Seidel by letter addressed to the Director, Technology Center 1600, PO BOX 1450, ALEXANDRIA, VA 22313-1450, or by telephone at 571-272-0584 or by facsimile transmission to the general Office facsimile number.

Marianne C. Seidel
Special Program Examiner
Technology Center 1600

UNITED STATES PATENT AND TRADEMARK OFFICE

COMMISSIONER FOR PATENTS
UNITED STATES PATENT AND TRADEMARK OFFICE
P.O. BOX 1450
ALEXANDRIA, VA 22313-1450
www.uspto.gov

COPY MAILED

JUL 1 4 2005

OFFICE OF PETITIONS

BUSKOP LAW GROUP, P.C.
1776 YORKTOWN
SUITE 550
HOUSTON TX 77056

In re Application of	:	
Maurine Pearson, et al.	:	DECISION ON PETITIONS
Application No. 10/614,925	:	UNDER 37 CFR 1.78(a)(3) AND
Filed: July 8, 2003	:	UNDER 37 CFR 1.78(a)(6)
Attorney Docket No. 1067.08	:	

This is a decision on the petition under 37 CFR §§ 1.78(a)(3) and 1.78(a)(6), filed February 28, 2005, to accept an unintentionally delayed claim under 35 U.S.C. §§120 and 119(e) for the benefit of the prior-filed applications set forth in the concurrently filed amendment.

The petition is **GRANTED**.

A petition for acceptance of a claim for late priority under 37 CFR §§ 1.78(a)(3) and 1.78(a)(6) is only applicable to those applications filed on or after November 29, 2000. Further, the petition is appropriate only after the expiration of the period specified in 37 CFR §§ 1.78(a)(2)(ii) and 1.78(a)(5)(ii). In addition, the petition under 37 CFR §§ 1.78(a)(3) and 1.78(a)(6) must be accompanied by:

(1) the reference required by 35 U.S.C. §§ 120 and 119(e) and 37 CFR §§ 1.78(a)(2)(i) and 1.78(a)(5)(i) of the prior-filed application, unless previously submitted;
(2) the surcharge set forth in § 1.17(t); and
(3) a statement that the entire delay between the date the claim was due under 37 CFR §§ 1.78(a)(2)(ii) and 1.78(a)(5)(ii) and the date the claim was filed was unintentional. The Commissioner may require additional where there is a question whether the delay was unintentional.

The application was filed on July 8, 2003 and was pending at the time of filing of the instant petition. A reference to the prior-filed applications has been included in an amendment to

the first sentence of the specification following the title, as required by 37 CFR §§ 1.78(a)(2)(iii) and 1.78(a)(5)(iii).

Additionally, intermediate nonprovisional application No. 09/915,470 was filed within twelve months of provisional Application No. 60/262,578, which was filed on July 26, 2001, for which priority is claimed. Accordingly, having found that the petition satisfies the conditions of 37 CFR §§ 1.78(a)(3) and 1.78(a)(6) for acceptance of an unintentionally delayed claim for priority under 35 U.S.C. §§ 120 and § 119(e), the petition to accept an unintentionally delayed claim of benefit to the prior-filed applications is granted.

The granting of the petition to accept the delayed benefit claim to the prior-filed applications under 37 CFR §§ 1.78(a)(3) and 1.78(a)(6) should <u>not</u> be construed as meaning that the instant application is entitled to the benefit of the filing date of the prior-filed applications. In order for the instant application to be entitled to the benefit of the prior-filed applications, all other requirements under 35 U.S.C. §120 and 1.78(a)(1) and (a)(2) and under 35 U.S.C. §119(e) and 37 CFR 1.78(a)(4) and (a)(5) must be met. Similarly, the fact that the corrected Filing Receipt accompanying this decision on petition includes the prior-filed applications should <u>not</u> be construed as meaning that applicant is entitled to the claim for benefit of priority to the prior-filed applications noted thereon. Accordingly, the examiner will, in due course, consider this benefit claim and determine whether the instant application is entitled to the benefit of the earlier filing date.

A corrected Filing Receipt, which includes the priority claim to the prior-filed applications, accompanies this decision on petition.

Any questions concerning this matter may be directed to Sherry D. Brinkley at (571) 272-3204

This application is being forwarded to Technology Center Art Unit 2666 for appropriate action on the amendment submitted June 21, 2004, including consideration by the examiner of the claim under 35 U.S.C. § §120 and 37 CFR 1.78(a)(2) for the benefit of the prior-filed nonprovisional application, and for consideration of the claim under 35 U.S.C. §119(e) and 37 CFR 1.78(a)(5) for the benefit of the prior-filed provisional application.

Sherry D. Brinkley

Sherry D. Brinkley
Petitions Examiner
Office of Petitions
Office of the Deputy Commissioner
for Patent Examination Policy

Frances Hicks

Frances M. Hicks
Petitions Examiner
Office of Petitions
Office of the Deputy Commissioner
for Patent Examination Policy

ATTACHMENT : Corrected Filing Receipt

UNITED STATES PATENT AND TRADEMARK OFFICE

Commissioner for Patents
United States Patent and Trademark Office
P.O. Box 1450
Alexandria, VA 22313-1450
www.uspto.gov

JJGJR.: 06-06

Paper No: __

MARSHALL, GERSTEIN
& BORUN LLP
233 S. WACKER DRIVE, SUITE 6300
SEARS TOWER
CHICAGO IL 60606

COPY MAILED

JUN 07 2006

OFFICE OF PETITIONS

In re Application of	:	
MItchell, et al.	:	DECISION
Application No.: 10/614,940	:	
Filing Date: 7 July, 2003	:	
Attorney Docket No. 590-004	:	

This is a decision on the petition filed on 24 April, 2006, to revive the instant application under 37 C.F.R. §1.137(b) as having as abandoned due to unintentional delay, and also seeks relief under the provisions of 37 C.F.R. §1.181, §1.182 and §1.183 .

For the reasons set forth below the petition as considered under 37 C.F.R. §1.137(b) is **DISMISSED**; and the petitions as considered under 37 C.F.R. §1.181, §1.182 and §1.183 are **DISMISSED**.

It appears that, as of 7 March, 2005, Petitioner no longer was empowered to prosecute the instant application. If Petitioner desires to receive future correspondence regarding this application, the appropriate power of attorney documentation must be submitted. A courtesy copy of this decision will be mailed to Petitioner. However, all future correspondence will be directed to the address of record until such time as appropriate instructions are received to the contrary.

Further, all parties, including Petitioners, always are reminded of the burden of those registered to practice *and* all others who make representations before the Office, *inter alia*, to inquire into the underlying facts of representations made to the Office.[1]

NOTES:

(1) Any petition (and fee) for reconsideration of this decision must be submitted within two (2) months from the mail date of this decision. Extensions of time under 37 C.F.R. §1.136(a) are permitted. The reconsideration request should include a cover letter entitled "Renewed Petition under 37 C.F.R. §1.137(b)."

---

[1] See supplement of 17 June, 1999. The Patent and Trademark Office is relying on petitioner's duty of candor and good faith and accepting a statement made by Petitioner. See Changes to Patent Practice and Procedure, 62 Fed. Reg. at 53160 and 53178, 1203 Off. Gaz. Pat. Office at 88 and 103 (responses to comments 64 and 109)(applicant obligated under 37 C.F.R. §10.18 to inquire into the underlying facts and circumstances when providing statements to the Patent and Trademark Office).

Specifically, the regulations at 37 C.F.R. §10.18 provide:

§ 10.18 Signature and certificate for correspondence filed in the Patent and Trademark Office.
(a) For all documents filed in the Office in patent, trademark, and other non-patent matters, except for correspondence that is required to be signed by the applicant or party, each piece of correspondence filed by a practitioner in the Patent and Trademark Office must bear a signature by such practitioner complying with the provisions of §1.4(d), §1.4(e), or § 2.193(c)(1) of this chapter.
(b) By presenting to the Office (whether by signing, filing, submitting, or later advocating) any paper, the party presenting such paper, whether a practitioner or non-practitioner, is certifying that—

(1) All statements made therein of the party's own knowledge are true, all statements made therein on information and belief are believed to be true, and all statements made therein are made with the knowledge that whoever, in any matter within the jurisdiction of the Patent and Trademark Office, knowingly and willfully falsifies, conceals, or covers up by any trick, scheme, or device a material fact, or makes any false, fictitious or fraudulent statements or representations, or makes or uses any false writing or document knowing the same to contain any false, fictitious or fraudulent statement or entry, shall be subject to the penalties set forth under 18 U.S.C. 1001, and that violations of this paragraph may jeopardize the validity of the application or document, or the validity or enforceability of any patent, trademark registration, or certificate resulting therefrom; and

(2) To the best of the party's knowledge, information and belief, formed after an inquiry reasonable under the circumstances, that —

(i) The paper is not being presented for any improper purpose, such as to harass someone or to cause unnecessary delay or needless increase in the cost of prosecution before the Office;

(ii) The claims and other legal contentions therein are warranted by existing law or by a nonfrivolous argument for the extension, modification, or reversal of existing law or the establishment of new law;

(iii) The allegations and other factual contentions have evidentiary support or, if specifically so identified, are likely to have evidentiary support after a reasonable opportunity for further investigation or discovery; and

(iv) The denials of factual contentions are warranted on the evidence, or if specifically so identified, are reasonably based on a lack of information or belief.

(c) Violations of paragraph (b)(1) of this section by a practitioner or non-practitioner may jeopardize the validity of the application or document, or the validity or enforceability of any patent, trademark registration, or certificate resulting therefrom. Violations of any of paragraphs (b)(2)(i) through (iv) of this section are, after notice and reasonable opportunity to respond, subject to such sanctions as deemed appropriate by the Commissioner, or the Commissioner's designee, which may include, but are not limited to, any combination of —

(1) Holding certain facts to have been established;
(2) Returning papers;
(3) Precluding a party from filing a paper, or presenting or contesting an issue;
(4) Imposing a monetary sanction;
(5) Requiring a terminal disclaimer for the period of the delay; or
(6) Terminating the proceedings in the Patent and Trademark Office.

(d) Any practitioner violating the provisions of this section may also be subject to disciplinary action. See § 10.23(c)(15).
[Added 50 FR 5175, Feb. 6, 1985, effective Mar. 8, 1985; para. (a) revised, 58 FR 54494, Oct. 22, 1993, effective Nov. 22, 1993; paras. (a) & (b) revised, paras. (c) & (d) added, 62 FR 53131, Oct. 10, 1997, effective Dec. 1, 1997; para. (a) revised, 69 FR 56481, Sept. 21, 2004, effective Oct. 21, 2004]

(2) Thereafter, there will be no further reconsideration of this matter.

BACKGROUND

The record reflects that:

- after a change of Power of Attorney in March 2005, from Kristofer Halvorson (Reg. No. 39,211) (Mr. Halvorson) to David A. Gass (Reg. No. 38,153) (Mr. Gass) the Assignee–Phlo System Inc. (PSI) by and through James B. Hovis (Mr. Hovis), representing to the Office that he is President of said Assignee–representing to the Office that it held 100 percent of the interest in the instant application (and upon presenting to the Office a copy of the Assignment) sought on 26 January, 2006, an Express Abandonment, which was granted on 6 February, 2006, and the abandonment was effective that date;[2]

- the application has remained abandoned thereafter;

- on 24 April, 2006, Petitioner Mr. Halvorson filed the instant petition representing a lack of authority by PSI and/or Mr. Hovis to seek and obtain an express abandonment, and alleging therein other matters not of record;

- clearly there at the very least an incongruity in the representations made by Petitioner herein, which are, as are all representations by practitioners and applicants before the Office, susceptible to review for compliance with the duty of candor.

STATUTES, REGULATIONS AND ANALYSIS

Congress has authorized the Commissioner to "revive an application if the delay is shown to the

---

[2] The commentary at MPEP §711.01 states in pertinent part:

711.01 Express or Formal Abandonment [R-3] - 700 Examination of Applications

711.01 Express or Formal Abandonment [R-3]

The applicant (acquiesced in by an assignee of record), or the attorney/agent of record, if any, can sign an express abandonment. It is imperative that the attorney or agent of record exercise every precaution in ascertaining that the abandonment of the application is in accordance with the desires and best interests of the applicant prior to signing a letter of express abandonment of a patent application. Moreover, special care should be taken to ensure that the appropriate application is correctly identified in the letter of abandonment. (Emphasis supplied.)

* * *

satisfaction of the Commissioner to have been "unavoidable." 35 U.S.C. §133 (1994).[3]

The regulations at 37 C.F.R. §1.137(a) and (b) set forth the requirements for a petitioner to revive a previously unavoidably or unintentionally, respectively, abandoned application under this congressional grant of authority. The language of 35 U.S.C. §133 and 37 C.F.R. §1.137(a) is clear, unambiguous, and without qualification: the delay in tendering the reply to the outstanding Office action, as well as filing the first petition seeking revival, must have been unavoidable for the reply now to be accepted on petition.[4]

Delays in responding properly raise the question whether delays are unavoidable.[5] Where there is a question whether the delay was unavoidable, Petitioners must meet the burden of establishing that the delay was unavoidable within the meaning of 35 U.S.C. §133 and 37 C.F.R. §1.137(a).[6] And the Petitioner must be diligent in attending to the matter.[7] Failure to do so does not constitute the care required under Pratt, and so cannot satisfy the test for diligence and due care.

(By contrast, unintentional delays are those that do not satisfy the very strict statutory and regulatory requirements of unavoidable delay, and also, by definition, are not intentional.[8]))

Allegations as to
Unintentional Delay

The regulatory requirements of a petition under 37 C.F.R. §1.137(b) are the petition, fee, reply, statement/showing of unintentional delay, and–where appropriate–a terminal disclaimer and fee.

As of this writing Petitioner has not satisfied at least the statement/showing requirement.

---

[3] 35 U.S.C. §133 provides:
35 U.S.C. §133 Time for prosecuting application.
Upon failure of the applicant to prosecute the application within six months after any action therein, of which notice has been given or mailed to the applicant, or within such shorter time, not less than thirty days, as fixed by the Commissioner in such action, the application shall be regarded as abandoned by the parties thereto, unless it be shown to the satisfaction of the Commissioner that such delay was unavoidable.

[4] Therefore, by example, an unavoidable delay in the payment of the Filing Fee might occur if a reply is shipped by the US Postal Service, but due to catastrophic accident, the delivery is not made.

[5] See: *Changes to Patent Practice and Procedure*; *Final Rule Notice*, 62 *Fed. Reg.* at 53158-59 (October 10, 1997), 1203 *Off. Gaz. Pat. Office* at 86-87 (October 21, 1997).

[6] See: In re Application of G, 11 USPQ2d 1378, 1380 (Comm'r Pats. 1989).

[7] See: Diligence in Filing Petitions to Revive and Petitions to Withdraw the Holding of Abandonment, 1124 Off. Gaz. Pat. Office 33 (March 19, 1991). It was and is Petitioner's burden to exercise diligence in seeking either to have the holding of abandonment withdrawn or the application revived. See 1124 Off. Gaz. Pat. Office supra.

[8] Therefore, by example, an unintentional delay in the reply might occur if the reply and transmittal form are to be prepared for shipment by the US Postal Service, but other pressing matters distract one's attention and the mail is not timely deposited for shipment.

As to Relief Under 37 C.F.R.
§1.181, §1.182 and §1.183

Petitioner has referred to documents not in evidence.

Petitioner has referred to proceedings not of record.

The provisions of 37 C.F.R. §1.181, §1.182 and §1.183,[9] respectively, seek intervention by the Director, address remedies not otherwise provided and seek waiver of the rules in the interest of justice.

Yet, Petitioner presents nothing more than two declarations, self-serving or otherwise, and provides no official documentation in support of, for example, the petition under 37 C.F.R. §1.181, and there is sufficient authority for revival in extent rules to obviate a pleading under 37 C.F.R. §1.182. As indicated earlier, Petitioner has made no official documentary showing that might support a waiver of rules in the interest of justice under 37 C.F.R. §1.183.

Petitioner's failure to act in compliance with statute(s) and regulation(s) creates no "extraordinary situation" requiring the invocation of the interests of justice. The Office, where it has the power to do so, should not relax the requirements of established practice in order to save an applicant from the consequence of his delay.[10] Moreover, the Office has no authority to waive the statutory requirements. Thus, Petitioner seeks a waiver pursuant to 37 C.F.R. §1.183[11] that is neither justified nor permitted, and Petitioner has not paid the required fee.

Petitioner has offered no basis for any of the relief sought.

---

[9] The regulations at 37 C.F.R. §1.183 provide, in pertinent part:
§1.183 Suspension of the Rules.
In an extraordinary situation, when justice requires, any requirement of the regulations in this part which is not a requirement of the statutes may be suspended or waived by the Commissioner or the Commissioner's designee, *sua sponte*, or on petition of the interested party, subject to such other requirements as may be imposed. * * *

[10] See, Ex Parte Sassin, 1906 Dec. Comm'r. Pat. 205, 206 (Comm'r Pat. 1906) and compare Ziegler v. Baxter v. Natta, 159 USPQ 378, 379 (Comm'r Pat. 1968) and Williams v. The Five Platters, Inc., 510 F.2d 963, 184 USPQ 744 (CCPA 1975). Thus, there is no adequate showing of "an extraordinary situation" in which "justice requires" suspension of the time period set forth in 37 C.F.R. 1.193(b). See, Nitto Chem. Indus. Co. v. Comer, 39 USPQ2d 1778, 1782 (D.D.C. 1994) (circumstances are not extraordinary, and do not require waiver of the rules, when a party makes an avoidable mistake in filing papers). Circumstances resulting from petitioner's failure to exercise due care, or lack of knowledge of or failure to properly apply the patent statutes or rules of practice are not, in any event, extraordinary circumstances where the interests of justice require the granting of relief. See, In re Tetrafluor, Inc., 17 USPQ2d 1160, 1162 (Comm'r Pats. 1990); In re Bird & Son, Inc. 195 USPQ 586, 588 (Comm'r Pats. 1977).

[11] Delay resulting from the inadvertence or mistake of Petitioner does not warrant equitable tolling of the time period of 37 C.F.R. §1.193(b). Equitable powers should not be invoked to excuse the performance of a condition by a party that has not acted with reasonable, due care and diligence. U.S. v. Lockheed Petroleum Services, 709 F.2d 1472, 1475 (Fed. Cir. 1983); Smith v. Mossinghoff, 671 F.2d 533, 538, 213 USPQ 977, 982 (D.C. Cir. 1982). Even assuming *arguendo*, that clerical inadvertence or error caused or contributed to the delay in filing the Reply Brief, such is not a ground for requesting waiver of the regulations. See In re Kabushiki Kaisha Hitachi Seisakusho, 39 USPQ2d 1319, 1320 (Comm'r Pat. 1994).

CONCLUSION

Accordingly, the petition as considered under 37 C.F.R. §1.137(b) is **dismissed**; further, the petitions under 37 C.F.R. §1.181, §1.182, and §1.183 are **dismissed**.

Further correspondence with respect to this matter should be addressed as follows:[12]

By mail: Commissioner for Patents[13]
P.O. Box 1450
Alexandria, VA 22313-1450

By FAX: IFW Formal Filings
(571) 273-8300
ATTN.: Office of Petitions

By hand: Mail Stop: Petition
Customer Service Window
Randolph Building
401 Dulany Street
Alexandria, VA 22314

Telephone inquiries concerning this decision may be directed to the undersigned at (571) 272-3214.

John J. Gillon, Jr.
Senior Attorney
Office of Petitions

cc:
Kristofer Halvorson
1757 E. Baseline Rd./Ste. 130
Gilbert AZ 85233

---

[12] On July 15, 2005, the Central Facsimile (FAX) Number changed to (571) 273-8300. The old FAX number no longer is in service and (571) 273-8300 will be the only facsimile number recognized for centralized delivery. (For further information. see: http://www.uspto.gov/web/offices/pac/dapp/opla/preognotice/cfax062005.pdf .)

[13] To determine the appropriate addresses for other subject-specific correspondence, refer to the USPTO Web site at www.uspto.gov.

UNITED STATES PATENT AND TRADEMARK OFFICE

Commissioner for Patents
United States Patent and Trademark Office
P.O. Box 1450
Alexandria, VA 22313-1450
www.uspto.gov

KRISTOFER E. HALVORSON
HALVORSON LAW FIRM, PC
1757 E. BASELINE ROAD/SUITE 130
GILBERT AZ 85233

COPY MAILED
JUN 23 2008
OFFICE OF PETITIONS

In re Application of	:	
Mitchell, et al.	:	
Application No. 10/614,940	:	DECISION
Filed: 7 July, 2003	:	
Attorney Docket No. 590-004	:	

This is a decision on the petition, filed on 15 March, 2007, and supplemented on 6 June, 2008, considered as a petition under 37 C.F.R. §1.181 (no fee) requesting withdrawal of the holding of abandonment in the above-identified application, alternatively for relief under the provisions of 37 C.F.R. §1.182 and §1.183; finally, alternatively for relief as revival of an application abandoned due to unavoidable delay or (as previously pleaded) unintentional delay, respectively, under 37 C.F.R. §1.137(a) or §1.137(b).

The Office regrets the delay in addressing this matter, however, the instant petition was presented to the attorneys in the Office of Petitions only at this writing.

The petition under:

- 37 C.F.R. §1.181 is **DISMISSED**;
- 37 C.F.R. §1.182 is **DISMISSED**;
- 37 C.F.R. §1.183 is **DISMISSED**;
- 37 C.F.R. §1.137(a) is **DISMISSED**;
- 37 C.F.R. §1.137(b) is **GRANTED**.

As to the Request to Withdraw
the Holding of Abandonment

A proper showing (for relief under 37 C.F.R. §1.181):

- (as to non-receipt) requires at the very minimum: a statement from practitioner stating that the Office action was not received by the practitioner; a statement from the practitioner attesting to the fact that a search of the file jacket and docket records for the application indicates that the Office action was not received with a copy of those docket records; and a brief statement of the calendaring process and a copy of the due-date (calendar) docket record(s) where the nonreceived Office action would have been scheduled for reply had it been received must be attached to and referenced in the practitioner's statement; alternatively,

- (for a showing of timely and proper reply) a statement from practitioner stating that the reply was timely submitted by the practitioner; and copies of all papers submitted as and/or in support of that reply, with/and a copy of the date-stamped receipt card, Office FAX receipt acknowledgement (not simply Petitioner's FAX transmittal), or EFS receipt acknowledgment from the Office, along with practitioner's attestation as to the correctness/completeness of his/her records.

The showing(s) must include that of the person(s) with first-hand knowledge and an acknowledgment by the Petitioner that he/she has reviewed that information in compliance with his/her duty of candor to the Office.

As to Relief
under 37 C.F.R. §1.182

A proper showing that relief is not alternatively set forth under another regulatory provision.

As to Relief
under 37 C.F.R. §1.183

A proper showing that the interests of justice require a waive of the rules.

As to Allegations of
Unavoidable Delay

The requirements of a grantable petition pursuant to 37 C.F.R. §1.137(a) are the petition and fee therefor, a reply, a proper showing of unavoidable delay under the regulation, and, where applicable, a terminal disclaimer and fee. (However, it does not appear that a terminal disclaimer and fee are due here.)

As to Allegations of
Unintentional Delay

The requirements of a grantable petition pursuant to 37 C.F.R. §1.137(b) are the petition and fee therefor, a reply, a proper statement of unintentional delay under the regulation, and, where applicable, a terminal disclaimer and fee. (However, it does not appear that a terminal disclaimer and fee are due here.)

BACKGROUND

The record reflects as follows:

After a change of Power of Attorney in March 2005, from Kristofer Halvorson (Reg. No. 39,211) (Mr. Halvorson) to David A. Gass (Reg. No. 38,153) (Mr. Gass), the Assignee–Phlo System Inc. (PSI) by and through James B. Hovis (Mr. Hovis), representing to the Office that he was President of said Assignee–representing to the Office that it held 100 percent of the interest in the instant application (and upon presenting to the Office a copy of the Assignment) sought on 26 January, 2006, an Express Abandonment, which was granted on 6 February, 2006.

The application remained abandoned thereafter.

On 24 April, 2006, Petitioner Mr. Halvorson filed the original petition representing a lack of authority by PSI and/or Mr. Hovis to seek and obtain an express abandonment, and alleging therein other matters not of record. There was, at the very least an incongruity in the representations made by Petitioner considered in contrast to the record as it previously stood, and for that reason the original petitions under 37 C.F.R. §1.181, alternatively §1.182 and §1.183, or for revival of an application abandoned due to unintentional delay, respectively under 37 C.F.R. §1.137(a) or §1.137(b) were dismissed on 7 June, 2006.

The instant petitions were filed on 15 March, 2007, and supported with a judgment of the Court of Chancery of the State of Delaware in and for New Castle County, which appears to have been entered on 30 January, 2007, and a signed and certified copy of said order was presented to the Office on 2 June, 2008—said Order declaring the "Alliance Agreement," and thus the assignment to PSI void *ab initio*, and all rights to, *inter alia*, the instant application returned to Petitioners herein ""as if it never left."[1]

In view of the Final Judgment and Order of 30 January, 2007, of the Court of Chancery of the State of Delaware in and for New Castle County, the showing of unintentional delay under 37 C.F.R. §1.137(b) has been satisfied, and the other regulatory requirements of petition, fee, such reply as was necessary (and there was none), appear to be satisfied and/or otherwise complete.

[1] Final Judgment and Order of 30 January, 2007, at page 2.

Out of an abundance of caution, Petitioners always are reminded that the filing of a petition under 37 C.F.R. §1.181 does not toll any periods that may be running any action by the Office and a petition seeking relief under the regulation must be filed within two (2) months of the act complained of (see: 37 C.F.R. §1.181(f)), and that those registered to practice and all others who make representations before the Office are reminded to inquire into the underlying facts of representations made to the Office and support averments with the appropriate documentation– since all owe to the Office the continuing duty to disclose.[2]

The availability of applications and application papers online to applicants/practitioners who diligently associate their Customer Number with the respective application(s) now provides an applicant/practitioner on-demand information as to events/transactions in an application.

(*See* MPEP § 711.03(c) under subheading "Petition to Withdraw Holding of Abandonment Based on Failure to Receive Office Action," alternative "A Reply Was Timely Filed"; see also: "Withdrawing the Holding of Abandonment When Office Actions Are Not Received," 1156 Official Gazette 53 (November 16, 1993).)

Allegations as to the Request to
Withdraw the Holding of Abandonment

The courts have determined the construct for properly supporting a petition seeking withdrawal of a holding of abandonment.[3] (See, also, the commentary at MPEP §711.03(c)(I)(A) and (B).) And the regulation requires that relief be sought within two (2) months of the act complained of.

Petitioner failed make the showing required.

As to Relief
under 37 C.F.R. §1.182

The showing that relief is not alternatively set forth under another regulatory provision is incomplete at this writing.

As to Relief
under 37 C.F.R. §1.183

The showing that the interests of justice require a waive of the rules is incomplete at this writing.

---

[2] See supplement of 17 June, 1999. The Patent and Trademark Office is relying on Petitioner's duty of candor and good faith and accepting a statement made by Petitioner. See Changes to Patent Practice and Procedure, 62 Fed. Reg. at 53160 and 53178, 1203 Off. Gaz. Pat. Office at 88 and 103 (responses to comments 64 and 109)(applicant obligated under 37 C.F.R. §10.18 to inquire into the underlying facts and circumstances when providing statements to the Patent and Trademark Office).

[3] See: Delgar v. Schulyer, 172 USPQ 513 (D.D.C. 1971).

As to Allegations of
Unavoidable Delay

The requirements under 37 C.F.R. §1.137(a) of a showing of unavoidable delay is incomplete as of this writing.

As to Allegations of
Unintentional Delay

The requirements under 37 C.F.R. §1.137(b) have been satisfied.

CONCLUSION

Accordingly, The petition under:

- 37 C.F.R. §1.181 is **dismissed**;
- 37 C.F.R. §1.182 is **dismissed**;
- 37 C.F.R. §1.183 is **dismissed**;
- 37 C.F.R. §1.137(a) is **dismissed**;
- 37 C.F.R. §1.137(b) is **granted**.

The instant application is released to Technology Center/AU 1618 for further processing in due course.

Petitioner may find it beneficial to view Private PAIR within a fortnight of the instant decision to ensure that the revival has been acknowledged by the Technology Center/AU in response to this decision. It is noted that all inquiries with regard to that change in status need be directed to the Technology Center/AU where that change of status must be effected—that does not occur in the Office of Petitions.

While telephone inquiries regarding this decision may be directed to the undersigned at (571) 272-3214, it is noted that all practice before the Office is in writing (see: 37 C.F.R. §1.2[4]) and the proper authority for action on any matter in this regard are the statutes (35 U.S.C.), regulations (37 C.F.R.) and the commentary on policy (MPEP). Therefore, no telephone discussion may be controlling or considered authority for Petitioner's action(s).

/John J. Gillon, Jr./
John J. Gillon, Jr.
Senior Attorney
Office of Petitions

[4] The regulations at 37 C.F.R. §1.2 provide:

§1.2 Business to be transacted in writing.

All business with the Patent and Trademark Office should be transacted in writing. The personal attendance of applicants or their attorneys or agents at the Patent and Trademark Office is unnecessary. The action of the Patent and Trademark Office will be based exclusively on the written record in the Office. No attention will be paid to any alleged oral promise, stipulation, or understanding in relation to which there is disagreement or doubt.

OIPE
MAR 15 2007
PATENT & TRADEMARK OFFICE

03-16-07

PETITION TO REVIVE ABANDONED APPLICATION FOR PATENT

IN THE UNITED STATES PATENT AND TRADEMARK OFFICE

In re Application of:	Mitchell et al.	Group Art Unit:1645
Serial No.:	10/614,940	
Filed:	July 7, 2003	
For:	Oral Rehydration Compositions Containing Liposomes	

Commissioner of Patents and Trademarks
Mail Stop Petition
PO Box 1450
Alexandria, VA 22313-1450

Refund Ref:
06/24/2008 CKHLOK 0000163315

PETITION TO REVIVE ABANDONED APPLICATION UNDER THE PROVISIONS OF 37 C.F.R. 1.181, 37 C.F.R. 1.182, 37 C.F.R. 1.183, AND 37 C.F.R. 1.137(A)

CHECK Refund Total: $400.00

Dear Sir:

Petitioner Cheryl R. Mitchell and James B. Mitchell by and through their attorney respectfully petition the Commissioner of Patents and Trademarks to revive the above-identified application.

For the reasons stated below, Petitioner asks that the Commissioner to exercise authority pursuant to 37 C.F.R. §§1.181, 1.182, and 1.183 to revive the application.

Alternatively, Petitioner requests revival of the application under 37 C.F.R. §1.137(a).

Documents and Fees Filed in Support of this Petition

In support of this petition to revive, Petitioner incorporates by reference all the documents in the application prosecution history and files herewith the following documents and fees:

Adjustment date: 06/24/2008 CKHLOK
03/19/2007 HGUTEMA1 00000013 10614940
01 FC:1462 400.00 OP
-400.00 OP
03/19/2007 HGUTEMA1 00000013 10614940
01 FC:1462

- Memorandum Opinion, Court of Chancery of the Sate of Delaware in and for New Castle County, *Creative Research Manufacturing v. Advanced Bio-Delivery LLC and Phlo systems, Inc.*, Civil Action No. 1211-N, Decided January 30, 2007.

the parties in this case. *See* Final Order and Judgment, paragraph 4.

The lapse of prosecution by Petitioner was unavoidable because Petitioner could not control prosecution of the application until the litigation was concluded. Petitioner acted as a reasonably prudent person in the prosecution of the application while it was within Petitioner's power to control the prosecution. Petitioner diligently sought to protect Petitioner's property by filing suit to recover Petitioner's property. Petitioner further showed diligence by filing the prior petition to revive upon discovery of the express abandonment. As the Memorandum Opinion shows, the Petitioner was diligent even in the litigation. Any delay by Petitioner in this matter was completely unavoidable because Petitioner had to wait for the resolution of ownership by the court.

Petitioner requests that the Commissioner:

- Adopt the ruling of the Court of Chancery of Delaware that (1) the assignment is of no force or effect and (2) the express abandonment is invalid *ab initio*;
- Accept the appointment of Kristofer E. Halvorson as the attorney of record;
- Find that Petitioner was diligent in prosecuting the application;
- Find that the delay by Petitioner in prosecuting the application was unavoidable;
- Revive the petition as requested in the PTO Form SB/61 filed herewith.

The Petitioner files herewith in support of this request under §1.137(a) the fee set forth in 1.17(l).

Date: 3/15/07

Respectfully submitted,

Kristofer E. Halvorson
Attorney for Applicant
Reg. No.39,211
1757 E. Baseline Rd., Ste 130
Gilbert, Arizona 85233
(480) 892-2037

UNITED STATES PATENT & TRADEMARK OFFICE
Washington, D.C. 20231

REQUEST FOR PATENT FEE REFUND

1 Date of Request: _____ 2 Serial/Patent # 10/614900

	3 Please refund the following fee(s):	4 PAPER NUMBER	5 DATE FILED	6 AMOUNT
	Filing			$
	Amendment			$
	Extension of Time			$
	Notice of Appeal/Appeal			$
✓	Petition			$ 400.00
	Issue			$
	Cert of Correction/Terminal Disc.			$
	Maintenance			$
	Assignment			$
	Other			$

7 TOTAL AMOUNT OF REFUND $ 400.00

8 TO BE REFUNDED BY:

✓ Treasury Check

Credit Deposit A/C #:

9 [ ][ ] -- [ ][ ][ ][ ]

10 REASON:

	Overpayment
	Duplicate Payment
✓	No Fee Due (Explanation):

Paid for 137(b)

11 REFUND REQUESTED BY:

TYPED/PRINTED NAME: gillon TITLE: atty

SIGNATURE: /John Gillon/ PHONE: 23214

OFFICE: OP

****

THIS SPACE RESERVED FOR FINANCE USE ONLY:

APPROVED: CKhh DATE: 6/24/08

Instructions for completion of this form appear on the back. After completion, attach white and yellow copies to the official file and mail or hand-carry to:

Office of Finance
Refund Branch
Crystal Park One, Room 802B

FORM PTO 1577
(01/90)

UNITED STATES PATENT AND TRADEMARK OFFICE

Commissioner for Patents
United States Patent and Trademark Office
P.O. Box 1450
Alexandria, VA 22313-1450
www.uspto.gov

THOMTE LAW OFFICE, L.L.C.
2120 S. 72ND STREET, SUITE 1111
OMAHA NE 68124

COPY MAILED

AUG 0 1 2008

OFFICE OF PETITIONS

In re Application of	:	
Raymon W. Lush	:	
Application No. 10/614,947	:	DECISION ON PETITION
Filed: July 8, 2003	:	UNDER 37 CFR 1.137(b)
For: COLLAPSIBLE FEEDER	:	

This is a decision on the petition, filed November 9, 2007, which is being treated as a petition under 37 CFR 1.137(b) to revive the instant nonprovisional application for failure to timely notify the U.S. Patent and Trademark Office (USPTO) of the filing of an application in a foreign country, or under a multinational treaty that requires publication of applications eighteen months after filing. *See* 37 CFR 1.137(f).

The petition is **DISMISSED** as inappropriate for the reasons stated below.

The record discloses that, on July 8, 2003, the date of filing of the instant application, a Request and Certification under 35 U.S.C. § 122(b)(2)(B)(i) was filed certifying that "the invention disclosed in the attached **application has not and will not** be the subject of an application filed in another country, or under a multilateral international agreement, that requires publication at eighteen months after filing."

Petitioner now requests under 35 U.S.C. § 122(b)(2)(B)(ii) that the Request and Certification Under 35 U.S.C. § 122(b)(2)(B)(i) be rescinded and the application be revived because this application became abandoned for failure to notify the USPTO within 45 days of the filing of a corresponding international or foreign application. In this regard, petitioner states that an international or foreign application corresponding to the instant application was filed on May 8, 2002, which date is prior to the date of filing the instant application.

The instant nonprovisional application did not become abandoned as a result of the filing of a corresponding application filed in another country, or under a multilateral international agreement, **subsequent** to the filing of the present application. In this regard, 35 U.S.C. § 122((b)(2)(B)(iii) states:

> An applicant who has made a request under clause (i) but who **subsequently files, in a foreign country or under a multilateral international agreement** specified in clause (i), an application directed to the invention disclosed in the application filed in the Patent

> and Trademark Office, shall notify the Director of such filing not later than 45 days **after the date of the filing of such foreign or international application**. A failure of the applicant to provide such notice within the prescribed period shall result in the application being regarded as abandoned, unless it is shown to the satisfaction of the Director that the delay in submitting the notice was unintentional [emphasis supplied].

The facts of this case are that the subject application was filed on July 8, 2003, and the corresponding foreign application was filed on May 8, 2002. The statute does not provide for the situation where a certification under 35 U.S.C. § 122(b)(2)(B)(i) was made, despite the fact that an application was previously filed in another country or under the multilateral international agreement. The provisions of 35 U.S.C. § 122(b)(2)(B)(iii) only provide for revival in the situation where a certification was made under 35 U.S.C. § 122(b)(2)(B)(i) at the time of filing the application and an application was subsequently filed in a foreign country without notifying the Office within 45 days of the filing thereof.

In view of the above and since this application did not become abandoned pursuant to the provisions of 35 U.S.C. § 122(b)(2)(B)(iii), a petition to revive under the provisions of 37 CFR 1.137(b) is inappropriate and, therefore, must be dismissed.

The rules and statutory provisions governing the operations of the USPTO require payment of a fee on filing each petition. *See* 35 U.S.C. § 41(c)(7). Accordingly, petitioner may request a refund of the petition fee by writing to the Office of Finance Refund Section. A copy of this decision should accompany the request.

Any inquiries concerning this decision may be directed to the undersigned at (571) 272-3208.

Karen Creasy

Karen Creasy
Petitions Examiner
Office of Petitions

UNITED STATES PATENT AND TRADEMARK OFFICE

Commissioner for Patents
United States Patent and Trademark Office
P.O. Box 1450
Alexandria, VA 22313-1450
www.uspto.gov

THOMTE LAW OFFICE, L.L.C.
2120 S. 72ND STREET, SUITE 1111
OMAHA NE 68124

COPY MAILED

NOV 25 2008

OFFICE OF PETITIONS

In re Patent No. 6,866,004
Issue Date: March 15, 2005
Application No. 10/614,947
Filed: July 8, 2003
For: COLLAPSIBLE FEEDER

DECISION GRANTING PETITION
UNDER 37 CFR 1.137(b)

This is a decision on the petition, filed September 17, 2008, which is being treated as a petition under 37 CFR 1.137(b) to accept an unintentionally delayed notification to the U.S. Patent and Trademark Office (USPTO) of the filing of an application in a foreign country or under a multinational treaty that requires publication of applications eighteen-months after filing. *See* 37 CFR 1.137(f).

The petition under 37 CFR 1.137(b) is **GRANTED**.

Petitioner states that the instant nonprovisional application is the subject of an application filed in an eighteen-month publication country on December 10, 2003. However, the USPTO was unintentionally not notified of this filing within 45 days subsequent to the filing of the subject application in an eighteen-month publication country. Therefore, pursuant to the provisions of 35 U.S.C. § 122(b)(2)(B)(iii) and 37 CFR 1.213(c), petitioner failed to timely notify the USPTO of the filing of a counterpart application in a foreign country or under a multilateral international agreement that requires publication of applications 18 months after filing.

A petition under 37 CFR 1.137(b) to accept an unintentionally delayed notification to the USPTO of the filing of a counterpart application in an eighteen-month publication country must be accompanied by:

(1) the required reply which is met by the notification of such filing in a foreign country or under a multinational treaty;
(2) the petition fee as set forth in 37 CFR 1.17(m); and
(3) a statement that the entire delay in filing the required reply from the due date of the reply until the filing of a grantable petition was unintentional.

The instant petition has been found to be in compliance with 37 CFR 1.137(b). Accordingly, the failure to timely notify the USPTO of a foreign or international filing within 45 days as provided by 35 U.S.C. § 122(b)(2)(B)(iii) is accepted as having been unintentionally delayed.

This application matured into Patent No.6,866,004 on March 15, 2005. Therefore, no further action being required, this patented file is being referred to Files Repository.

Telephone inquiries concerning this decision should be directed to the undersigned at (571) 272-3208.

Karen Creasy
Petitions Examiner
Office of Petitions

UNITED STATES PATENT AND TRADEMARK OFFICE

Commissioner for Patents
United States Patent and Trademark Office
P.O. Box 1450
Alexandria, VA 22313-1450
www.uspto.gov

SCULLY SCOTT MURPHY & PRESSER, PC
400 Garden City Plaza, Suite 300
Garden City, NY 11530

NOV 23 2005

In re Application of:
Takayuki Suzu
Serial No.: 10/614,955
Filed: July 08, 2003
Attorney Docket No.: **NE-1143-US/KWG (16815)**

DECISION ON PETITION TO WITHDRAW HOLDING OF ABANDONMENT

This is a decision on the communication filed January 20, 2005. The communication has been treated as a petition to withdraw the holding of abandonment in the above-identified application under 37 C.F.R. § 1.181. No fee is required.

The petition is **GRANTED.**

The application was held abandoned for failure to timely pay the issue fee in response to the Notice of Allowance and Issue Fee Due (Notice of Allowance) mailed on October 14, 2004. A Notice of Abandonment was mailed on January 03, 2005.

Petitioner asserts that the Notice of Allowance mailed on October 14, 2004, was not received. To support this assertion, petitioner provided a statement attesting that a search of the file jacket and docket records showed that the Notice of Allowance was not received. Included with the statement are with copies of the docket records where the Notice of Allowance would have been entered were also included.

A review of the written record indicates no irregularity in the mailing of the Notice of Allowance, and in the absence of any irregularity there is a strong presumption that the Office action was properly mailed to practitioner at the address of record. This presumption may be overcome by a showing that the Office action was not in fact received. The showing required to establish the failure to receive an Office action must include a statement from the practitioner stating that the Office action was not received by the practitioner and attesting to the fact that a search of the file jacket and docket records indicates that the Office action was not received. A copy of the docket record where the non-received Office action would have been entered had it been received and docketed must be attached to and referenced in practitioner's statement. See "Withdrawing the Holding of Abandonment When Office Actions Are Not Received" 1156 Official Gazette 53 (November 16, 1993) and M.P.E.P. § 711.03(c).

The petition is accompanied by a showing that establishes non-receipt of the Notice of Allowance mailed October 14, 2004. As such, the petition satisfies the above-stated requirements. Accordingly, the application was not abandoned in fact.

For the above stated reason, the petition is granted. The Notice of Abandonment is hereby vacated and the holding of abandonment withdrawn. The application is restored to pending status.

The application file is being forwarded to the Technology Center 2800 support staff for re-mailing the Notice of Allowability and a Notice of Allowance and Issue Fee Due. The shortened statutory periods for response set therein will be reset to run from the date the Notices are re-mailed. Extensions of time for these periods are not available. See 37 C.F.R. § 1.136(c), effective November 07, 2000.

Inquiries regarding this decision should be directed to Clayton E. LaBalle at (571) 272-1594.

James K. Dwyer, Director
Technology Center 2800
Semiconductors, Electrical and Optical
Systems and Components

UNITED STATES PATENT AND TRADEMARK OFFICE

Commissioner for Patents
United States Patent and Trademark Office
P.O. Box 1450
Alexandria, VA 22313-1450
www.uspto.gov

OLIFF & BERRIDGE PLC
P O BOX 19928
ALEXANDRIA, VA 22320

COPY MAILED

AUG 18 2006

OFFICE OF PETITIONS

In re Application of
Tsuyoshi Maeda
Application No. 10/614,980
Filed: November 6, 2002
Attorney Docket No. 115907

DECISION ON PETITION
UNDER 37 CFR 1.313(c)(2)

This is a decision on the petition, filed October 7, 2005, under 37 CFR 1.313(c)(2) to withdraw the above-identified application from issue after payment of the issue fee.

The petition is **GRANTED,** *nunc pro tunc*.

The file record discloses that a Notice of Allowance and Fee(s) Due was mailed on June 10, 2005. The issue and publication fees were timely paid on September 9, 2005. Thereafter, on October 7, 2005, petitioner submitted a petition under 37 CFR 1.313(c)(2) to withdraw this application from issue, a Request for Continued Examination under 37 CFR 1.114, an amendment, and an Information Disclosure Statement.

It is noted that, although the petition to withdraw from issue had not been acted upon by the appropriate deciding official of the U.S. Patent and Trademark Office, the Technology Center processed the request for continued examination (RCE) under 37 CFR 1.114 and subsequently issued a new Notice of Allowance and Fee(s) Due and Notice of Allowability on December 16, 2005. Where an issue fee has been paid and an RCE is subsequently filed, the RCE is not a proper filing unless a petition to withdraw from issue has been granted. Therefore, the examiner was without authority to act further in the case absent a grantable petition withdrawing the application from issue. Nevertheless, in view of this decision on petition, the RCE is now considered a proper filing and the actions of the examiner taken thereafter are hereby ratified.

The file record of this case discloses that Part B - Fee(s) Transmittal form was received on March 1, 2006, in reply to the December 16, 2005 Notice of Allowance. Accordingly, this matter is being referred to Publishing Division for appropriate processing in the normal course of business.

Inquiries concerning this decision may be directed to the undersigned at (571) 272-3218.

Frances Hicks
Petitions Examiner
Office of Petitions

UNITED STATES PATENT AND TRADEMARK OFFICE

COMMISSIONER FOR PATENTS
UNITED STATES PATENT AND TRADEMARK OFFICE
P.O. BOX 1450
ALEXANDRIA, VA 22313-1450
www.uspto.gov

HUMAN GENOME SCIENCES INC
INTELLECTUAL PROPERTY DEPT.
14200 SHADY GROVE ROAD
ROCKVILLE MD 20850

COPY MAILED

MAR 18 2005

OFFICE OF PETITIONS

Applicant: Olsen et al.
Appl. No.: 10/614,990
Filing Date: July 9, 2004
Title: STANNIOCALCIN POLYNUCLEOTIDES, POLYPEPTIDES AND METHODS BASED THEREON
Attorney Docket No.: PF108P2D1
Pub. No.: US 2004/0198658 A1
Pub. Date: October 7, 2004

This is in response to the request for correction of patent application publication under 37 CFR 1.221(b), which was filed on December 6, 2004.

The request is DISMISSED.

Applicant requests the application be republished because the patent application publication is alleged to contain material mistakes, as it fails to include claims 2-15, 33-47, 49-62, 64-67, 79-102, 104-120 and 122-138, as were originally filed in the application. Applicant states that the publication appears to be based on the preliminary amendment filed June 23, 2004 and failed to publish the claims as originally filed in compliance with 37 CFR 1.215, as the amendment to the rule did not go into effect until October 21, 2004. Applicant argues that the failure to publish these claims as originally filed is material error affecting the scope of the provisional rights that the applicant may seek to enforce upon issuance of the patent.

37 CFR 1.221(b) is applicable "only when the Office makes a material mistake which is apparent from Office records . . . This period is not extendable." A material mistake must affect the public's ability to appreciate the technical disclosure of the patent application publication, to determine the scope of the patent application publication, or to determine the scope of the provisional rights that an applicant may seek to enforce upon issuance of a patent.[1]

---

[1] Changes to Implement Eighteen-Month Publication of Patent Applications, 65 FR 57023, 57038 (Sept. 20, 2000), 1239 Off. Gaz. Pat. Office Notices 63, 75 (Oct. 10, 2000) (final rule).

On June 23, 2004, applicant filed a response to a restriction requirement, which canceled and amended some of the claims, which were originally filed in the application. On October 7, 2004, the Office published the patent application with the claims as amended on June 23, 2004.

The patent application publication does not include a mistake in the publication by the Office because a patent application publication may include a preliminary amendment. While applicant argues that the changes to 37 CFR 1.215(a) published in the Federal Register on September 21, 2004 did not go into effect until October 21, 2004, the amendments to 37 CFR 1.215(a) were a codification of the current Office practice. The Office changed the procedures for publication of patent applications so as to publish applications as amended and waived the provisions 37 CFR 1.215(a) to the extent that they were inconsistent with this change in practice. See Patent Application Publications May Now Include Amendments, 1281 Off. Gaz. Pat. Office Notices 53 (April 13, 2004).

Applicant's request for a corrected patent application publication on December 6, 2004, may constitute a "failure to engage in reasonable efforts to conclude processing or examination of the application." See 1.704(c). This determination will be made on or after a mailing of a Notice of Allowance.

The applicant is advised that the canceled claims can be published, if an amendment is filed adding the claims and paying the appropriate fee, a "request for republication of an application previously published" may be filed under 37 CFR 1.221(a). Such a request for republication "must include a copy of the application in compliance with the Office's electronic filing system requirements and be accompanied by the publication fee set forth in § 1.18(d) and the processing fee set forth in § 1.17(i)." If the request for republication does not comply with the electronic filing system requirements, the republication will not take place and the publication fee set forth in § 1.18(d) will be refunded. The processing fee will be retained.

Any request for republication under 37 CFR 1.221(b), must be submitted via the EFS system and questions or request for reconsideration of this decision, should be addressed as follows:

By mail to: Mail Stop PGPUB
Commissioner for Patents
P.O. Box 1450
Alexandria, VA 22313-1450

Inquiries relating to this matter may be directed to Mark Polutta at (703) 308-8122 (voice) or (703) 746-3465 (facsimile).

Mark O. Polutta
Office of Patent Legal Administration
Office of the Deputy Commissioner
for Patent Examination Policy

UNITED STATES PATENT AND TRADEMARK OFFICE

UNITED STATES DEPARTMENT OF COMMERCE
United States Patent and Trademark Office
Address: COMMISSIONER FOR PATENTS
P.O. Box 1450
Alexandria, Virginia 22313-1450
www.uspto.gov

TEXAS INSTRUMENTS INCORPORATED
P O BOX 655474, M/S 3999
DALLAS, TX 75265

Mail Date: 04/20/2010

Applicant	: Dennis Harold Burke JR.	: DECISION ON REQUEST FOR
Patent Number	: 7587642	: RECALCULATION of PATENT
Issue Date	: 09/08/2009	: TERM ADJUSTMENT IN VIEW
Appliction No	: 10/614,997	: OF WYETH AND NOTICE OF INTENT TO
Filed	: 07/08/2003	: ISSUE CERTIFICATE OF CORRECTION
		:

The Request for Recalculation is **GRANTED** to the extent indicated.

The patent term adjustment has been determined to be **1551** days. The USPTO will *sua sponte* issue a certificate of correction reflecting the amount of PTA days determined by the recalculation.

Prior to the issuance of the certificate of correction, the USPTO will afford patentee an opportunity to be heard and request reconsideration. Accordingly, patentee has **one month or thirty (30) days**, whichever is longer, to file a request for reconsideration of this patent term adjustment calculation. See 35 U.S.C. 154(b)(3)(B)(ii) and 37 CFR 1.322(a)(4). No extensions of time will be granted under 37 CFR 1.136.

Patentee should use document code PET.OP if electronically filing a request for reconsideration of this patent term adjustment calculation. The patentee must also include the information required by 37 CFR 1.705(b)(2) and the fee required by 37 CFR 1.18(e). If patentee does not file a timely request for reconsideration of this patent term adjustment calculation including the information required by 37 CFR 1.705(b)(2) and the fee required by 37 CFR 1.18(e), the USPTO will issue a certificate of correction reflecting the PTA determination noted above.

Patentee should be aware that in order to preserve the right to review in the United States District Court for the District of Columbia of the USPTO patent term adjustment determination, patentee must ensure that he or she also take the steps required under 35 U.S.C. 154(b)(4)(A) in a timely manner. Nothing in the request for recalculation should be construed as providing an alternative time frame for commencing a civil action under 35 U.S.C. 154(b)(4)(A).

Any questions concerning this decision should be directed to the Office of Patent Legal Administration at 571-272-7702.

UNITED STATES PATENT AND TRADEMARK OFFICE

COMMISSIONER FOR PATENTS
UNITED STATES PATENT AND TRADEMARK OFFICE
P.O. BOX 1450
ALEXANDRIA, VA 22313-1450
www.uspto.gov

DARBY & DARBY P.C.
Post Office Box 5257
New York, NY 10150-5257

COPY MAILED

JUL 19 2005

OFFICE OF PETITIONS

In re Application of :
Mladen Mercep, et al. :
Application No. 10/615,010 : ON PETITION
Filed: July 7, 2003 :
Attorney Docket No. 038180/100L651-US1 :

This is a decision on the petition, filed July 19, 2005, under 37 CFR 1.313(c)(2) to withdraw the above-identified application from issue after payment of the issue fee.

The petition is **GRANTED**.

The above-identified application is withdrawn from issue for consideration of a submission under 37 CFR 1.114 (request for continued examination). See 37 CFR 1.313(c)(2).

Petitioner is advised that the issue fee paid on June 30, 2005, in the above-identified application cannot be refunded. If, however, the above-identified application is again allowed, petitioner may request that it be applied towards the issue fee required by the new Notice of Allowance. [1]

Telephone inquiries relating to this decision should be directed to the undersigned at (571) 272-3204.

The application is being referred to Technology Center AU 1623 for further processing of the request for continued examination under 37 CFR 1.114.

Sherry D. Brinkley
Petitions Examiner
Office of Petitions

[1]The request to apply the issue fee to the new Notice may be satisfied by completing and returning the new Issue Fee Transmittal Form PTOL-85(b), which includes the following language thereon: "Commissioner for Patents is requested to apply the Issue Fee and Publication Fee (if any) or re-apply any previously paid issue fee to the application identified above." Petitioner is advised that, whether a fee is indicated as being due or not, the Issue Fee Transmittal Form **must** be completed and timely submitted to avoid abandonment. Note the language in bold text on the first page of the Notice of Allowance and Fee(s) Due (PTOL-85).

UNITED STATES PATENT AND TRADEMARK OFFICE

Commissioner for Patents
United States Patent and Trademark Office
P.O. Box 1450
Alexandria, VA 22313-1450
www.uspto.gov

LADAS & PARRY LLP
224 SOUTH MICHIGAN AVENUE
SUITE 1600
CHICAGO IL 60604

COPY MAILED

JUN 26 2008

OFFICE OF PETITIONS

In re Application of	:
Hiroyuki Otaki et al	:
Application No. 10/615,041	: DECISION GRANTING PETITION
Filed: July 8, 2003	: UNDER 37 CFR 1.137(b)
Attorney Docket No. CU-5982	:

This is a decision on the petition under 37 CFR 1.137(b), filed October 9, 2007, to revive the above-identified application.

The petition is **GRANTED**.

The petition satisfies the conditions for revival pursuant to the provisions of 37 CFR 1.137(b) in that (1) the reply in the form of an amendment; (2) the petition fee; and (3) the required statement of unintentional delay have been received. Accordingly, the reply to the Nonfinal Rejection mailed September 7, 2005, is accepted as having been unintentionally delayed.

Telephone inquiries concerning this decision should be directed to the undersigned at (571) 272-3208.

This matter is being referred to Technology Center AU 1756 to consider the reply received October 9, 2007.

Karen Creasy

Karen Creasy
Petitions Examiner
Office of Petitions

UNITED STATES PATENT AND TRADEMARK OFFICE

Commissioner for Patents
United States Patent and Trademark Office
P.O. Box 1450
Alexandria, VA 22313-1450
www.uspto.gov

FROMMER LAWRENCE & HAUG LLP
745 Fifth Avenue
New York NY 10151

COPY MAILED

APR 2 0 2007

OFFICE OF PETITIONS

In re Application of	:	
Koenraad PRINGIERS	:	
Application No. 10/615,070	:	ON PETITION
Filed: July 8, 2003	:	
Attorney Docket No. 610002-2000	:	

This is a decision on the petition under 37 CFR 1.137(b), April 13, 2007, to revive the above-identified application.

The petition is **GRANTED**.

The above-identified application became abandoned for failure to reply in a timely manner to the non-final Office action mailed September 8, 2004, which set a shortened statutory period for reply of three (3) months. No extensions of time under the provisions of 37 CFR 1.136(a) were obtained. Accordingly, the above-identified application became abandoned on December 9, 2004.

The above-identified application is being revived solely for purposes of continuity. As continuity has been established by this decision reviving the above-identified application, the above-identified application is again abandoned in favor of continuing application No. 11/074,433, filed March 8, 2005.

It is not apparent whether the person signing the statement of unintentional delay was in a position to have firsthand knowledge of the facts and circumstances of the delay at issue. Nevertheless, such statement is being treated as having been made as the result of a reasonable inquiry into the facts and circumstances of such delay. See 37 CFR 10.18(b) and Changes to Patent Practice and Procedure; Final rule Notice, 62 Fed. Reg. 53131, 53178 (October 10, 1997), 1203 Off. Gaz. Pat. Office 63, 103 (October 21, 1997). In the event that such an inquiry has not been made, petitioner must make such an inquiry. If such inquiry results in the discovery that it is not correct that the entire delay in filing the required reply from the due date for the reply until the filing of a grantable petition pursuant of 37 CFR 1.137(b) was unintentional, petitioner must notify the Office.

An extension of time under 37 CFR 1.136 must be filed prior to the expiration of the maximum extendable period for reply. See In re Application of S., 8 USPQ2d 1630, 1631 (Comm'r Pats. 1988). Since the $1020 extension of time fee submitted with the petition on September 22, 2005

was subsequent to the maximum extendable period for reply, petitioner may request a refund of this fee by writing to the following address: Mail Stop 16, Commissioner for Patents, P. O. Box 1450, Alexandria, VA 22313-1450. A copy of this decision should accompany petitioner's request.

Telephone inquiries concerning this decision should be directed to David A. Bucci at (571) 272-7099.

David Bucci
Petitions Examiner
Office of Petitions

PTO/SB/66 (03-09)
Approved for use through 03/31/2012. OMB 0651-0016
U.S. Patent and Trademark Office: U.S. DEPARTMENT OF COMMERCE
Under the Paperwork Reduction Act of 1995, no persons are required to respond to a collection of information unless it displays valid OMB control number.

PETITION TO ACCEPT UNINTENTIONALLY DELAYED PAYMENT OF MAINTENANCE FEE IN AN EXPIRED PATENT (37 CFR 1.378(c))

Patent Number	Issue Date (YYYY-MM-DD)	Application Number	Filing Date (YYYY-MM-DD)	Docket Number (if applicable)
6883373	2005-04-26	10615076	2003-07-08	IR-3343 (ES) CIP

CAUTION: Maintenance fee (and surcharge, if any) payment must correctly identify: (1) the patent number and (2) the application number of the actual U.S. application leading to issuance of that patent to ensure the fee(s) is/are associated with the correct patent. 37 CFR 1.366(c) and (d).

SMALL ENTITY

☐ Patentee claims, or has previously claimed, small entity status. See 37 CFR 1.27.

LOSS OF ENTITLEMENT TO SMALL ENTITY STATUS

☐ Patentee is no longer entitled to small entity status. See 37 CFR 1.27(g)

NOT Small Entity			Small Entity		
	Fee	Code		Fee	Code
◉	3 ½ year	(1551)	○	3 ½ year	(2551)
○	7 ½ year	(1552)	○	7 ½ year	(2552)
○	11 ½ year	(1553)	○	11 ½ year	(2553)

SURCHARGE

The surcharge required by 37 CFR 1.20(i)(2) (Fee Code 1558) must be paid as a condition of accepting unintentionally delayed payment of the maintenance fee.

MAINTENANCE FEE (37 CFR 1.20(e)-(g))

The appropriate maintenance fee must be submitted with this petition.

STATEMENT

THE UNDERSIGNED CERTIFIES THAT THE DELAY IN PAYMENT OF THE MAINTENANCE FEE TO THIS PATENT WAS UNINTENTIONAL

PETITIONER(S) REQUEST THAT THE DELAYED PAYMENT OF THE MAINTENANCE FEE BE ACCEPTED AND THE PATENT REINSTATED

THIS PORTION MUST BE COMPLETED BY THE SIGNATORY OR SIGNATORIES

37 CFR 1.378(d) states: "Any petition under this section must be signed by an attorney or agent registered to practice before the Patent and Trademark Office, or by the patentee, the assignee, or other party in interest."

I certify, in accordance with 37 CFR 1.4(d)(4) that I am

◉ An attorney or agent registered to practice before the Patent and Trademark Office

○ A sole patentee

○ A joint patentee; I certify that I am authorized to sign this submission on behalf of all the other patentees.

○ A joint patentee; all of whom are signing this e-petition

○ The assignee of record of the entire interest

Patent Practitioner			
A signature of the applicant or representative is required in accordance with 37 CFR 1.33 and 10.18. Please see 37 CFR 1.4(d) for the form of the signature			
Signature	/Todd W. Galinski/	Date (YYYY-MM-DD)	2009-06-16
Name	Todd W. Galinski	Registration Number	51713

This collection of information is required by 37 CFR 1.378(c). The information is required to obtain or retain a benefit by the public which is to file (and by the USPTO to process) an application. Confidentiality is governed by 35 U.S.C. 122 and 37 CFR 1.11 and 1.14. This collection is estimated to take 1 hour to complete, including gathering, preparing, and submitting the completed application form to the USPTO. Time will vary depending upon the individual case. Any comments on the amount of time you require to complete this form and/ or suggestions for reducing this burden, should be sent to the Chief Information Officer, U.S. Patent and Trademark Office, U.S. Department of Commerce, P.O. Box 1450, Alexandria, VA 22313-1450. DO NOT SEND FEES OR COMPLETED FORMS TO THIS ADDRESS. **This form can only be used when in conjunction with EFS-Web. If this form is mailed to the USPTO, it may cause delays in reinstating the patent.**

Privacy Act Statement

The Privacy Act of 1974 (P.L. 93-579) requires that you be given certain information in connection with your submission of the attached form related to a patent application or patent. Accordingly, pursuant to the requirements of the Act, please be advised that: (1) the general authority for the collection of this information is 35 U.S.C. 2(b)(2); (2) furnishing of the information solicited is voluntary; and (3) the principal purpose for which the information is used by the U.S. Patent and Trademark Office is to process and/or examine your submission related to a patent application or patent. If you do not furnish the requested information, the U.S. Patent and Trademark Office may not be able to process and/or examine your submission, which may result in termination of proceedings or abandonment of the application or expiration of the patent.

The information provided by you in this form will be subject to the following routine uses:

1. The information on this form will be treated confidentially to the extent allowed under the Freedom of Information Act (5 U.S.C. 552) and the Privacy Act (5 U.S.C. 552a). Records from this system of records may be disclosed to the Department of Justice to determine whether the Freedom of Information Act requires disclosure of these records.

2. A record from this system of records may be disclosed, as a routine use, in the course of presenting evidence to a court, magistrate, or administrative tribunal, including disclosures to opposing counsel in the course of settlement negotiations.

3. A record in this system of records may be disclosed, as a routine use, to a Member of Congress submitting a request involving an individual, to whom the record pertains, when the individual has requested assistance from the Member with respect to the subject matter of the record.

4. A record in this system of records may be disclosed, as a routine use, to a contractor of the Agency having need for the information in order to perform a contract. Recipients of information shall be required to comply with the requirements of the Privacy Act of 1974, as amended, pursuant to 5 U.S.C. 552a(m).

5. A record related to an International Application filed under the Patent Cooperation Treaty in this system of records may be disclosed, as a routine use, to the International Bureau of the World Intellectual Property Organization, pursuant to the Patent Cooperation Treaty.

6. A record in this system of records may be disclosed, as a routine use, to another federal agency for purposes of National Security review (35 U.S.C. 181) and for review pursuant to the Atomic Energy Act (42 U.S.C. 218(c)).

7. A record from this system of records may be disclosed, as a routine use, to the Administrator, General Services, or his/her designee, during an inspection of records conducted by GSA as part of that agency's responsibility to recommend improvements in records management practices and programs, under authority of 44 U.S.C. 2904 and 2906. Such disclosure shall be made in accordance with the GSA regulations governing inspection of records for this purpose, and any other relevant (i.e., GSA or Commerce) directive. Such disclosure shall not be used to make determinations about individuals.

8. A record from this system of records may be disclosed, as a routine use, to the public after either publication of the application pursuant to 35 U.S.C. 122(b) or issuance of a patent pursuant to 35 U.S.C. 151. Further, a record may be disclosed, subject to the limitations of 37 CFR 1.14, as a routine use, to the public if the record was filed in an application which became abandoned or in which the proceedings were terminated and which application is referenced by either a published application, an application open to public inspections or an issued patent.

9. A record from this system of records may be disclosed, as a routine use, to a Federal, State, or local law enforcement agency, if the USPTO becomes aware of a violation or potential violation of law or regulation.

UNITED STATES PATENT AND TRADEMARK OFFICE

Commissioner for Patents
United States Patent and Trademark Office
P.O. Box 1450
Alexandria, VA 22313-1450
www.uspto.gov

In re Patent No. 6883373
Issue Date: April 26,2005
Application No. 10615076
Filed: July 8,2003
Attorney Docket No. IR-3343 (ES) CIP

:DECISION GRANTING PETITION
:UNDER 37 CFR 1.378(c)

This is a decision on the electronic petition, filed June 16,2009 ,under 37 CFR 1.378(c) to accept the unintentionally delayed payment of the 3.5 year maintenance fee for the above-identified patent.

The petition is **GRANTED**.

The maintenance fee is accepted, and the above-identified patent reinstated as of June 16,2009 .
This decision also constitutes notice that the fee has been accepted. An electronic copy of the petition and this decision has been created as an entry in the Image File Wrapper. Nevertheless, petitioner should print and retain an independent copy.

Telephone inquiries related to this electronic decision should be directed to the Electronic Business Center at 1-866-217-9197.

UNITED STATES PATENT AND TRADEMARK OFFICE

Commissioner for Patents
United States Patent and Trademark Office
P.O. Box 1450
Alexandria, VA 22313-1450
www.uspto.gov

WONG, CABELLO, LUTSCH, RUTHERFOR & BRUCCULER, LLP
20333 SH 249
SUITE 600
HOUSTON, TX 77070

COPY MAILED

SEP 18 2008

In re Application of	:	
M. Mizanur Rahman	:	
Application No. 10/615,081	:	DECISION ON PETITION
Filed: July 8, 2003	:	TO WITHDRAW
Attorney Docket No. 585-0036US	:	FROM RECORD
	:	

This is a decision on the Request to Withdraw as attorney or agent of record under 37 C.F.R. § 1.36(b), filed February 11, 2008.

The request is **NOT APPROVED**.

A grantable request to withdraw as attorney/agent of record must be signed by every attorney/agent seeking to withdraw or contain a clear indication that one attorney is signing on behalf of another/others. A request to withdraw will not be approved unless at least 30 (thirty) days would remain between the date of approval and the later of the expiration date of a time to file a response or the expiration date of the maximum time period which can be extended under 37 C.F.R. § 1.136(a).

The Office cannot approve the request at this time since the reasons provided do not meet any of the conditions under the mandatory or permissive categories enumerated in 37 CFR 10.40. Section 10.40 of Title 37 of the Code of Federal Regulation states, "[a] practitioner shall not withdraw from employment in a proceeding before the Office without permission from the Office[.]" More specifically, 37 CFR 10.40 states, "[i]f paragraph (b) of this section is not applicable, a practitioner may not request permission to withdraw in matter pending before the Office unless such request or such withdrawal is" for one the permissive reasons listed in 37 CFR 10.40(c). The reasons set forth in the request, "ownership transfer of listed patent and patent applications", do not meet any the conditions set forth in 37 CFR 10.40.

In order to request or take action in a patent matter, the assignee must establish its ownership of the patent to the satisfaction of the Director. In this regard, a Statement under 37 CFR 3.73(b) must have either: (i) documentary evidence of a chain of title from the original owner to the assignee (*e.g.*, copy of an executed assignment), and a statement affirming that the documentary evidence of the chain of title from the original owner to the assignee was or concurrently is being

submitted for recordation pursuant to § 3.11; or (ii) a statement specifying where documentary evidence of a chain of title from the original owner to the assignee is recorded in the assignment records of the Office (*e.g.*, reel and frame number).

All future communications from the Office will continue to be directed to the above-listed address until otherwise notified by applicant.

Telephone inquiries concerning this decision should be directed to undersigned at 571-272-1642.

April M. Wise
Petitions Examiner
Office of Petitions

UNITED STATES PATENT AND TRADEMARK OFFICE

Commissioner for Patents
United States Patent and Trademark Office
P.O. Box 1450
Alexandria, VA 22313-1450
www.uspto.gov

EASTMAN KODAK COMPANY
PATENT LEGAL STAFF
343 STATE STREET
ROCHESTER, NY 14650-2201

COPY MAILED

NOV 07 2008

OFFICE OF PETITIONS

In re Application of	:	
Xin Jin, et. al.	:	
Application No. 10/615,089	:	ON PETITION
Filed: July 8, 2003	:	
Attorney Docket No. H10230/CFR	:	

This is a decision on the petition under 37 CFR 1.137(b), filed on October 29, 2007, to revive the above-identified application. The delay in responding is regretted.

The application became abandoned for failure to timely file a proper reply to the final Office action mailed March 14, 2007. A Notice of Abandonment was mailed on October 12, 2007.

The instant petition is not signed by an attorney of record. However, in accordance with 37 CFR 1.34(a), the signature of Carl F. Ruoff appearing on the petition shall constitute a representation to the United States Patent and Trademark Office that he is authorized to represent the particular party on whose behalf he acts.

The petition satisfies the requirements of 37 CFR 1.137(b) in that petitioner has supplied (1) the reply in the form of a Request for Continued Examination (RCE) under 37 CFR 1.114, with the $810 filing fee; (2) the petition fee of $1,540; and (3) a proper statement of unintentional delay. Therefore, the petition is **GRANTED**.

This application is being revived for consideration of the RCE filed on October 29, 2007.

The application file is being referred to Technology Center Art Unit 1795, for processing of the RCE and for appropriate action by the Examiner in the normal course of business on the previously submitted amendment.

Telephone inquiries concerning this decision should be directed to the undersigned at (571) 272-3226.

Andrea Smith
Petitions Examiner
Office of Petitions

UNITED STATES PATENT AND TRADEMARK OFFICE

Commissioner for Patents
United States Patent and Trademark Office
P.O. Box 1450
Alexandria, VA 22313-1450
www.uspto.gov

STATTLER-SUH PC / NETLOGIC
60 SOUTH MARKET STREET
SUITE 480
SAN JOSE, CA 95113

MAILED

MAR 22 2010

OFFICE OF PETITIONS

In re Patent No. 7,075,363 :
Issue Date: July 11, 2006 :
Application No. 10/615,093 : NOTICE
Filed: July 7, 2003 :
Attorney Docket No. AELU.P0006

This is a notice regarding your request for acceptance of a fee deficiency submission under 37 CFR 1.28. On September 1, 1998, the Court of Appeals for the Federal Circuit held that 37 CFR 1.28(c) is the sole provision governing the time for correction of the erroneous payment of the issue fee as a small entity. **See DH Technology v. Synergystex International, Inc. 154 F.3d 1333, 47 USPQ2d 1865 (Fed. Cir. Sept. 1, 1998).**

The Office no longer investigates or rejects original or reissue applications under 37 CFR 1.56. **1098 Off. Gaz. Pat. Office 502 (January 3, 1989)**. Therefore, nothing in this Notice is intended to imply that an investigation was done.

Your fee deficiency submission under 37 CFR 1.28 is hereby **ACCEPTED**.

Inquiries related to this communication should be directed to Irvin Dingle at (571) 272-3210.

Irvin Dingle
Petitions Examiner
Office of Petitions

10/615094

SPE RESPONSE FOR CERTIFICATE OF CORRECTION

Paper No.: _____

DATE : 10/11/05

TO SPE OF : ART UNIT **1762**

SUBJECT : Request for Certificate of Correction on Patent No.: 10/615094 6905730

A response is requested with respect to the accompanying request for a certificate of correction.

Please complete this form and return with file, within **7** days to:
Palm location **7580, Certificates of Correction Branch – South Tower – 9A22**
If response is for an IFW, **return to employee (named below) via PUBSCofC Team in MADRAS.**
With respect to the change(s) requested, correcting Office and/or Applicant's errors, should the patent read as shown in the certificate of correction (COCIN)? No new matter should be introduced, nor should the scope or meaning of the claims be changed.

Thank You For Your Assistance

Angela Green
Certificates of Correction Branch
Tel. No. 703-305-9380 ext. 123

The request for issuing the above-identified correction(s) is hereby:
Note your decision on the appropriate box.

- [x] **Approved** — All changes apply.
- [ ] **Approved in Part** — Specify below which changes **do not** apply.
- [ ] **Denied** — State the reasons for denial below.

Comments:

_____

_____

_____

_____

_____

SPE — 1762 Art Unit

UNITED STATES PATENT AND TRADEMARK OFFICE

COMMISSIONER FOR PATENTS
UNITED STATES PATENT AND TRADEMARK OFFICE
P.O. BOX 1450
ALEXANDRIA, VA 22313-1450
www.uspto.gov

COPY MAILED

JAN 20 2004

OFFICE OF PETITIONS

MYERS BIGEL SIBLEY & SAJOVEC
PO BOX 37428
RALEIGH NC 27627

In re Application of
Gammon
Application No. 10/615,096
Filed: July 8, 2003
Attorney Docket No. 998-932
For: VEHICLE SEAT CARGO STORAGE APPARATUS

: DECISION GRANTING
: PETITION

This is a decision on the petition under 37 CFR 1.10(c), filed October 16, 2003 (certificate of mailing date October 14, 2003), requesting that the above-identified application be accorded a filing date July 8, 2003. A review of Office PALM database records reveals that the presently accorded filing date is July 8, 2003. However, it is noted that the filing receipt mailed October 7, 2003 listed the filing date as July 9, 2003. The petition will be addressed to clarify the record.

Petitioner requests a July 8, 2003 filing date for the above-identified application on the basis that it was deposited in Express Mail service of the United States Postal Service (USPS) on July 8, 2003, pursuant to the requirements of 37 CFR 1.10. The petition is accompanied by a copy of Express Mail label no. EV353596027US showing no "date-in" **and** a USPS date stamp of "JUL 8 2003." The same Express Mail label number is listed on the original Application Transmittal Letter found in the application file. To further bolster petitioner's case, petitioner has submitted a copy of the USPS Track and Confirm record for the package associated with EV353596027US which states it was accepted by the USPS on July 8, 2003.

The evidence presented establishes that the Express Mail package associated with Express Mail label no. EV353596027US was deposited with the USPS on July 8, 2003.

Accordingly, the petition is granted. No fee has been or will be charged in connection with this petition.

The application is being returned to the Office of Initial Patent Examination for further processing with a filing date of July 8, 2003 and the mailing of a corrected filing receipt.

Any inquiries related to this decision should be directed to the undersigned at (703) 308-6712.

E. Shirene Willis

E. Shirene Willis
Senior Petitions Attorney
Office of Petitions

UNITED STATES PATENT AND TRADEMARK OFFICE

Commissioner for Patents
United States Patent and Trademark Office
P.O. Box 1450
Alexandria, VA 22313-1450
www.uspto.gov

COPY MAILED

JUL 06 2007

OFFICE OF PETITIONS

INTELLECTUAL PROPERTY/TECHNOLOGY LAW
PO BOX 14329
RESEARCH TRIANGLE PARK NC 27709

In re Application of	:	
Jeff Grady	:	
Application No. 10/615,108	:	ON PETITION
Filed: July 8, 2003	:	
Attorney Docket No. 4185-101-CIP	:	

This is a decision on the petition, filed June 29, 2007, under 37 CFR 1.313(c)(2) to withdraw the above-identified application from issue after payment of the issue fee.

The petition is **GRANTED.**

The above-identified application is withdrawn from issue for consideration of a submission under 37 CFR 1.114 (request for continued examination). See 37 CFR 1.313(c)(2).

Petitioner is advised that the issue fee paid on June 1, 2007 in the above-identified application cannot be refunded. If, however, the above-identified application is again allowed, petitioner may request that it be applied towards the issue fee required by the new Notice of Allowance.[1]

Telephone inquiries should be directed to the undersigned at (571) 272-3208.

The examiner of Technology Center AU 2618 will consider the request for continued examination under 37 CFR 1.114.

Karen Creasy
Petitions Examiner
Office of Petitions

---

[1] The request to apply the issue fee to the new Notice may be satisfied by completing and returning the new Issue Fee Transmittal Form PTOL-85(b), which includes the following language thereon: "Commissioner for Patents is requested to apply the Issue Fee and Publication Fee (if any) or re-apply any previously paid issue fee to the application identified above." Petitioner is advised that, whether a fee is indicated as being due or not, the Issue Fee Transmittal Form **must** be completed and timely submitted to avoid abandonment. Note the language in bold text on the first page of the Notice of Allowance and Fee(s) Due (PTOL-85).

DATE 7-6-07 APPLICATION NUMBER 10/615108

DOC CODE IMIS DOC DATE 7-6-07

DELIVER THE ATTACHED FIFLE/DOCUMENT TO THE TC SCANNING CENTER

CONTRACTOR: THE ATTACHED FILE/DOCUMENT MUST BE INDEXED AND SCANNED INTO IFW WITHIN **8** WORK HOURS; UPLOADING OF THE SCANNED IMAGES SHOULD OCCUR NO LATER THAN **16** WORK HOURS FOLLOWING RECEIPT OF THIS REQUEST

AFTER SCANNING, ORIGINAL DOCUMENTS SHOULD BE BOXED IN ACCORDANCE WITH INSTRUCTIONS

UNITED STATES PATENT AND TRADEMARK OFFICE

Commissioner for Patents
United States Patent and Trademark Office
P.O. Box 1450
Alexandria, VA 22313-1450
www.uspto.gov

Date : July 6, 2007

TO : Director, Office of Patent Publication

FROM : Office of Petitions

SUBJECT : Withdrawal from Issue of **Application No. 10/615,108**

Applicant(s) : Jeff Grady
Application No. : 10/615,108
Filed : July 8, 2003

The above-identified application has been assigned Patent No. 7,242,906 and an issue date of July 10, 2007.

It is hereby directed that this application be withdrawn from issue at the request of the applicant. Do not refund the issue fee.

The following erratum should be published in the Official Gazette if the above-identified application is published in the OG of July 10, 2007:

> **"All reference to Patent No. 7,242,906 to Jeff Grady of North Carolina for FM TRANSMITTER AND POWER SUPPLY/CHARGING ASSEMBLY FOR MP3 PLAYER appearing in the Official Gazette of July 10, 2007 should be deleted since no patent was granted."**

/Karen Creasy

Karen Creasy
Petitions Examiner
Office of Petitions

cc: Paul Harrison
Deneise Boyd
Mary Louise McAskill
Niomi Farmer
Mary E. Johnson (Cookie
Duane Davis (CDS)
Brad Harris
Kim Terrell
Kay Pinkney
Betty Powell

UNITED STATES PATENT AND TRADEMARK OFFICE

Commissioner for Patents
United States Patent and Trademark Office
P.O. Box 1450
Alexandria, VA 22313-1450
www.uspto.gov

STATTLER JOHANSEN & ADELI
P O BOX 51860
PALO ALTO, CA 94303

COPY MAILED
MAY 21 2004
OFFICE OF PETITIONS

In re Application of :
Barin Geoffry Haskell et al :
Application No. 10/615,117 : DECISION GRANTING PETITION
Filed: July 7, 2003 : UNDER 37 CFR 1.137(b)
Attorney Docket No. APLE.P0035 :

This is a decision on the petition, filed March 29, 2004, which is being treated as a petition under 37 CFR 1.137(b) to revive the instant nonprovisional application for failure to timely notify the U.S. Patent and Trademark (USPTO) of the filing of an application in a foreign country, or under a multinational treaty that requires publication of applications eighteen months after filing. *See* 37 CFR 1.137(f).

The petition is **GRANTED**.

Petitioner states that the instant nonprovisional application is the subject of an application filed in an eighteen month publication country on October 31, 2003. However, the USPTO was unintentionally not notified of this filing within 45 days subsequent to the filing of the subject application in an eighteen month publication country.

In view of the above, this application became abandoned pursuant to 35 U.S.C. § 122(b)(2)(B)(iii) and 37 CFR 1.213(c) for failure to timely notify the Office of the filing of an application in a foreign country or under a multilateral international agreement that requires publication of applications 18 months after filing.

A petition to revive an application abandoned pursuant to 35 U.S.C. 122(b)(2)(B)(iii) for failure to notify the USPTO of a foreign filing must be accompanied by:

(1) the required reply which is met by the notification of such filing in a foreign country or under a multinational treaty;
(2) the petition fee as set forth in 37 CFR 1.17(m); and
(3) a statement that the entire delay in filing the

required reply from the due date of the reply until the filing of a grantable petition was unintentional.

The instant petition has been found to be in compliance with 37 CFR 1.137(b). Accordingly, the failure to timely notify the USPTO of a foreign or international filing within 45 days after the date of filing of such foreign or international application as provided by 35 U.S.C. § 122(b)(2)(B)(iii) and 37 CFR 1.213(c) is accepted as having been unintentionally delayed.

The previous Request and Certification under 35 U.S.C. § 122(b)(2)(B)(I) has been rescinded. A Notice Regarding Rescission of Nonpublication Request which sets forth the projected publication date of August 26, 2004 accompanies this decision on petition.

Any inquiries concerning this decision may be directed to the undersigned at (703) 306-5685.

This application is being forwarded to Technology Center Art Unit 2615 for examination in due course.

Wan Laymon

Wan Laymon
Petitions Examiner
Office of Petitions
Office of the Deputy Commissioner
for Patent Examination Policy

ATTACHMENT: Notice Regarding Rescission of Nonpublication Request

UNITED STATES PATENT AND TRADEMARK OFFICE

Commissioner for Patents
United States Patent and Trademark Office
P.O. Box 1450
Alexandria, VA 22313-1450
www.uspto.gov

RAYTHEON COMPANY
INTELLECTUAL PROPERTY & LICENSING, EO/E04/N119
2000 EAST EL SEGUNDO BOULEVARD
P. O. BOX 902
EL SEGUNDO, CA 90245

COPY MAILED

MAY 2 7 2005

OFFICE OF PETITIONS

In re Application of	:	
O'Neill et al.	:	
Application No. 10/615,133	:	ON PETITION
Filed: July 8, 2003	:	
Attorney Docket No. 02W234	:	

This is a decision on the petition under 37 C.F.R. § 1.137(b), filed May 10, 2005, to revive the above-identified application.

The petition is **DISMISSED AS MOOT.**

An Office action under Ex parte Quayle, 1935 Dec. Comm'r Pat. 11 (1935) was mailed on April 5, 2005, which set a shortened statutory period for reply of two (2) months. Therefore, the period for reply will not end until midnight of June 5, 2005. Further, petitioner may submit up to a five-month extension of time prior to September 5, 2005, to lengthen the response period. Accordingly, a petition to revive the instant application would not be necessary until September 6, 2005 and after.

In view of the above, the $1500.00 petition fee is unnecessary and will be credited to petitioner's deposit account as authorized.

This matter is being referred to Technology Center 3600 for further examination on the merits.

Telephone inquiries regarding this decision should be directed to the undersigned at (571) 272-3282.

Liana Chase
Petitions Examiner
Office of Petitions
Office of the Deputy Commissioner
for Patent Examination Policy

UNITED STATES PATENT AND TRADEMARK OFFICE

Commissioner for Patents
United States Patent and Trademark Office
P.O. Box 1450
Alexandria, VA 22313-1450
www.uspto.gov

MAILED
FROM DIRECTORS OFFICE

NOV 0 8 2006

TECHNOLOGY CENTER 3600

Raytheon Company
Intellectual Property & Licensing, EO/E04/N119
2000 East El Segundo Boulevard
P. O. Box 902
El Segundo CA 90245

In re:	O'NEILL, et al.	: Decision on Petition for
Serial No.	10/615133	: Withdrawal of Finality of
Filed :	July 08, 2003	: an Office Action

For: **OBSCURATION METHOD FOR REDUCING THE INFRARED SIGNATURE OF AN OBJECT**

This is a decision on the petition under 37 CFR 1.181, received on August 31, 2006 for withdrawal of the finality of an Office action.

The applicant's petition is GRANTED-IN-PART.

A final rejection was mailed on January 31, 2006. In that action, the statement of rejection in paragraph 9 omitted claims 13 and 21. The text of the rejection identified how each of the claims applied to the rejection. This text is found in paragraphs 10-28. Within that text, at paragraphs 17 and 24, claims 13 and 21 are specifically mentioned and their the applicability to the art recited. A similar mistake was made in the non-final office action mailed on June 28, 2005. It is noted that paragraph 30 of the final rejection clarifies this mistake.

In an advisory action mailed on August 14, 2006, the examiner notices the mistake in the final action and attached a corrected copy of the Final action with claims 13 and 21 in the statement of the rejection.

Petitioner raises two points of concern in the petition:

1.) attaching a corrected final action to the advisory action is improper and the addition of claims 13 and 21 amounts to a new ground of rejection; and

2.) claims 13 and 21 were rejected for the first time in the attachment to the advisory action and therefore the Office should nullify this advisory and issue the attachment as a non-final office action.

A review of the history points to an oversight of the examiner of not mentioning claims 13 and 21 in the statement of the rejection. The examiner in paragraph 30 of the final office action points this out. Apparently, through a "cut and paste" operation, the examiner made the same omission in the final action. However, it is reasonable to apply the same statement made in paragraph 30 to the omission in the final action.

Therefore, upon reviewing the history, it is reasonable to assume that claims 13 and 21 are in fact rejected since they are clearly addressed in the body of the action and the examiner addressed the exact same omission that occurred in the non-final action. Although the attachment is viewed as merely a correction of an omission for the benefit of the applicant, it is improper to send out as an attachment to an advisory action. In this case the attachment should have been sent out as a corrected office action.

The petition with respect to the first point raised by the applicant is GRANTED.

With respect to the second point, the attachment to the advisory is not considered a "new" final office action and does not raise any new ground of rejection since the rejection of the claims were clearly pointed out in the body of the rejection.

The petition with respect to the second point raised by the applicant is DENIED.

The Final rejection mailed on January 31, 2006 has been withdrawn in a replacement Office action dated October 13, 2006. Therefore, no further action is required by the examiner with respect to this petition.

Any questions or comments with respect to this decision should be forwarded to Michael J. Carone at (571) 272-6873.

Donald T. Hajec, Director
Technology Center 3600
(571) 272-5150

UNITED STATES PATENT AND TRADEMARK OFFICE

COMMISSIONER FOR PATENTS
UNITED STATES PATENT AND TRADEMARK OFFICE
P.O. BOX 1450
ALEXANDRIA, VA 22313-1450
WWW.USPTO.GOV

2835

COHEN, PONTANI, LIEBERMAN & PAVANE
Suite 1210
555 Fifth Avenue
New York NY 10176

COPY MAILED

FEB 12 2004

OFFICE OF PETITIONS

In re Application of Brinkis, et al. Application No. 10/615,134 Filed: July 8, 2003 Attorney Docket No. 502901-155 For: ELECTRONICS UNIT	DECISION GRANTING PETITION

This is a decision on the petition under 37 CFR 1.53(e), filed October 17, 2003 (certificate of mailing date October 14, 2003), requesting that the above-identified application be accorded a filing date of July 8, 2003.

The application was deposited on July 8, 2003. On October 2, 2003, the Office of Initial Patent Examination mailed a Notice informing petitioners that no filing date had been accorded to the application papers deposited on July 8, 2003 because no drawing was present, as is required by 35 USC 113, and no executed oath or declaration was present.

In response to the Notice, petitioners timely filed the present petition. Petitioners request that the above-identified application be accorded a filing date of July 8, 2003 on the basis that 1 sheet of drawing was received in the Patent and Trademark Office (PTO) on July 8, 2003. In support, the petition is accompanied by a copy of applicants' itemized postcard receipt showing an Office of Initial Patent Examination generated barcode citing July 8, 2003 as the date of receipt. The postcard lists, *inter alia*, that the filing includes 1 sheet of drawing.

The return postcard constitutes *prima facie* evidence that 1 sheet of drawing was filed on July 8, 2003. MPEP 503. Accordingly, the request is granted. As petitioners state, the fact that an executed oath or declaration was omitted upon initial filing has no impact on filing date accordation. 35 USC 111 (a) (3).

Pursuant to petitioner's authorization, deposit account no. 03-2412 will be credited the $130 petition fee submitted with the instant petition.

The application is being returned to Office of Initial Patent Examination for further processing, with a filing date of **July 8, 2003**, using the copy of the 1 sheet of drawing submitted with the instant petition. Office records will be corrected to show that 1 sheet of drawing was present on filing.

Any inquiries pertaining to this matter may be directed to the undersigned at (703) 308-6712.

E. Shirene Willis

E. Shirene Willis
Senior Petitions Attorney
Office of Petitions

UNITED STATES PATENT AND TRADEMARK OFFICE

Commissioner for Patents
United States Patent and Trademark Office
P.O. Box 1450
Alexandria, VA 22313-1450
www.uspto.gov

CLARK & BRODY
1090 VERMONT AVENUE NW, SUITE 250
WASHINGTON DC 20005

COPY MAILED

JUN 11 2007

OFFICE OF PETITIONS

In re Application of	:	
LIM, Boon L.	:	
Application No. 10/615,137	:	DECISION ON PETITION
Filed: July 9, 2003	:	TO WITHDRAW
Attorney Docket No. **12027-0010**	:	FROM RECORD
	:	

This is a decision on the Request to Withdraw as attorney or agent of record under 37 C.F.R. § 1.36(b), filed January 8, 2007.

The request is **NOT APPROVED**.

A grantable request to withdraw as attorney/agent of record must be signed by every attorney/agent seeking to withdraw or contain a clear indication that one attorney is signing on behalf of another/others. A request to withdraw will not be approved unless at least 30 (thirty) days would remain between the date of approval and the later of the expiration date of a time to file a response or the expiration date of the maximum time period which can be extended under 37 C.F.R. § 1.136(a).

The Office cannot approve the request at this time since the reasons provided do not meet any of the conditions under the mandatory or permissive categories enumerated in 37 CFR 10.40. Section 10.40 of Title 37 of the Code of Federal Regulation states, "[a] practitioner shall not withdraw from employment in a proceeding before the Office without permission from the Office[.]" More specifically, 37 CFR 10.40 states, "[i]f paragraph (b) of this section is not applicable, a practitioner may not request permission to withdraw in matter pending before the Office unless such request or such withdrawal is" for one the permissive reasons listed in 37 CFR 10.40(c). The reasons set forth in the request do not meet any of the conditions set forth in 37 CFR 10.40.

All future communications from the Office will continue to be directed to the above-listed address until otherwise notified by applicant. Telephone inquiries concerning this decision should be directed to the undersigned at 571-272- 7253.

Monica A. Graves
Petitions Examiner
Office of Petitions

UNITED STATES PATENT AND TRADEMARK OFFICE

Commissioner for Patents
United States Patent and Trademark Office
P.O. Box 1450
Alexandria, VA 22313-1450
www.uspto.gov

SERGE DUPRAS AND GERALD DUPRAS
3725, ROUTE 346
SAINTE-JULIENNE
QUEBEC JOK2TO
CANADA

COPY MAILED

OCT 26 2006

OFFICE OF PETITIONS

In re Application of	:
Serge Dupras et al	:
Application No. 10/615,140	: DECISION GRANTING PETITION
Filed: July 9, 2003	: UNDER 37 CFR 1.137(b)
For: STORAGE STRUCTURE	:

This is a decision on the petition under 37 CFR 1.137(b), filed June 13, 2006, to revive the above-identified application.

The petition is **GRANTED**.

The petition satisfies the conditions for revival pursuant to the provisions of 37 CFR 1.137(b) in that (1) the reply in the form of an election (2) the petition fee; and (3) the required statement of unintentional delay have been received. Accordingly, the reply to the Restriction Requirement of September 30, 2004, is accepted as having been unintentionally delayed.

Telephone inquiries concerning this decision should be directed to the undersigned at (571) 272-3208.

This matter is being referred to Technology Center AU 3727.

Karen Creasy

Karen Creasy
Petitions Examiner
Office of Petitions

UNITED STATES PATENT AND TRADEMARK OFFICE

Commissioner for Patents
United States Patent and Trademark Office
P.O. Box 1450
Alexandria, VA 22313-1450
www.uspto.gov

DR. DANIEL P. MORRIS ESQ.
IBM CORPORATION
INTELLECTUAL PROPERTY LAW DEPT.
P.O. BOX 218
YORKTOWN HEIGHTS, NY 10598

COPY MAILED

OCT 2 4 2006

OFFICE OF PETITIONS

In re Application of	:
David W. Abraham et al	: DECISION ON PETITION
Application No. 10/615,147	: UNDER 37 CFR 1.78(a)(3)
Filed: July 8, 2003	:
Attorney Docket No. YOR920010260US2	:

This is a decision on the petition under 37 CFR 1.78(a)(3), filed May 10, 2006, to accept an unintentionally delayed claim under 35 U.S.C. §120 for the benefit of the prior-filed nonprovisional applications.

The petition is **DISMISSED**.

A petition for acceptance of a claim for late priority under 37 CFR 1.78(a)(3) is only applicable to those applications filed on or after November 29, 2000. Further, the petition is appropriate only after the expiration of the period specified in 37 CFR 1.78(a)(2)(ii). In addition, the petition under 37 CFR 1.78(a)(3) must be accompanied by:

(1) the reference required by 35 U.S.C. § 120 and 37 CFR 1.78(a)(2)(i) of the prior-filed application, unless previously submitted;

(2) the surcharge set forth in § 1.17(t); and

(3) a statement that the entire delay between the date the claim was due under 37 CFR 1.78(a)(2)(ii) and the date the claim was filed was unintentional. The Commissioner may require additional information where there is a question whether the delay was unintentional.

The instant petition does not comply with item (1)

The reference to the prior-filed nonprovisional applications is inconsistent. In the amendment submitted on May 5, 2006, the claim for priority reference states that Application No. 10/128,838 is a continuation of U.S. Application No. 09/708,253, whereas in the petition submitted on May 10, 2006, the claim for priority reference states that Application No. 10/128,838 is a continuation in part of Application No. 09/708,253. Clarification is required.

Additionally, the petition to expedite under 37 CFR 1.182 submitted on May 10, 2006 is dismissed as moot and no fee charged.

Accordingly, before the petition under 37 CFR § 1.78(a)(3) can be granted, a renewed petition under 37 CFR § 1.78(a)(3) and a substitute amendment or an ADS to address the above matter is required.

Further correspondence with respect to this matter should be addressed as follows:

By mail: Mail Stop PETITIONS
Commissioner for Patents
Post Office Box 1450
Alexandria, VA 22313-1450

By hand: Customer Window located at:

Randolph Building
401 Dulany Street
Alexandria, VA 22314

By fax: (571) 272-8300
ATTN: Office of Petitions

Any questions concerning this matter may be directed to the undersigned at (571) 272-3208.

Karen Creasy

Karen Creasy
Petitions Examiner
Office of Petitions

UNITED STATES PATENT AND TRADEMARK OFFICE

Commissioner for Patents
United States Patent and Trademark Office
P.O. Box 1450
Alexandria, VA 22313-1450
www.uspto.gov

DR. DANIEL P. MORRIS, ESQ.
IBM CORPORATION
INTELLECTUAL PROPERTY LAW DEPT.
P.O. BOX 218
YORKTOWN HEIGHTS NY 10598

COPY MAILED

OCT 23 2006

OFFICE OF PETITIONS

In re Application of	:	
David W. Abraham et al	:	
Application No. 10/615,147	:	DECISION GRANTING PETITION
Filed: July 8, 2003	:	UNDER 37 CFR 1.137(b)
Attorney Docket No. YOR920010260US2	:	

This is a decision on the petition under 37 CFR 1.137(b), filed May 5, 2006, to revive the above-identified application.

The petition is **GRANTED**.

The petition satisfies the conditions for revival pursuant to the provisions of 37 CFR 1.137(b) in that (1) the reply in the form of an amendment (2) the petition fee; and (3) the required statement of unintentional delay have been received. Accordingly, the reply to the Nonfinal Rejection of May 23, 2005, is accepted as having been unintentionally delayed.

Telephone inquiries concerning this decision should be directed to the undersigned at (571) 272-3208.

This matter is being referred to Technology Center AU 2827

Karen Creasy

Karen Creasy
Petitions Examiner
Office of Petitions

UNITED STATES PATENT AND TRADEMARK OFFICE

Commissioner for Patents
United States Patent and Trademark Office
P.O. Box 1450
Alexandria, VA 22313-1450
www.uspto.gov

ACCENTURE CHICAGO 28164
BRINKS HOFER GILSON & LIONE
P O BOX 10395
CHICAGO IL 60610

MAILED

NOV 23 2009

OFFICE OF PETITIONS

In re Patent No. 7,587,331
Issued: September 8, 2009
Application No. 10/615,157
Filed: July 7, 2003
Attorney Docket No. 10022579

: DECISION ON REQUEST
: FOR RECONSIDERATION OF
: PATENT TERM ADJUSTMENT

This is a decision on the "REQUEST FOR RECONSIDERATION OF PATENT TERM ADJUSTMENT PURSUANT TO 37 C.F.R. § 1.705(d)" filed September 17, 2009, requesting that the patent term adjustment determination for the above-identified patent be changed from 1111 days to 1746 days.

The request for reconsideration of patent term adjustment is **DISMISSED**.

On September 8, 2009, the above-identified application matured into US Patent No. 7,587,331 with a patent term adjustment of 1111 days. This request for reconsideration of patent term adjustment was timely filed within two months of the issue date of the patent. See 37 CFR 1.705(d).

The Office acknowledges submission of the $200.00 fee set forth in 37 CFR 1.18(e). No additional fees are required.

Patentees request recalculation of the patent term adjustment based on the decision in Wyeth v. Dudas, 580 F. Supp. 2d 138, 88 U.S.P.Q. 2d 1538 (D.D.C. 2008). Patentees assert that in view of the decision in Wyeth, they are entitled to a total patent term adjustment of 1746 days, which includes 1159 days due to exceeding three year pendency.

Patentees do not dispute that the total period of Office delay is the sum of the period of Three Years Delay (1159 days) and the period of Examination Delay (1192 days) to the extent that these periods of delay are not overlapping. However, in effect, patentees contend that 524 days of the Three Year Delay period overlaps with the examination delay. Accordingly, patentees submit that the total period of adjustment for Office delay is 1746 days, which includes the period of Three Year Delay (1159 days) and the period

of Examination Delay (1192 days), reduced by the period of overlap (524 days). As such, patentees assert entitlement to a patent term adjustment of 1746 days (1159 + 1192 reduced by 524 overlap – 81 (applicant delay)).

The Office contends that all 1159 days for over three year pendency overlap with the 1192 days accorded for Office delay during the pendency of the application, and thus, no additional days were entered for over three year delay. Patentees' calculation of the period of overlap is inconsistent with the Office's interpretation of this provision. 35 U.S.C. 154(b)(2)(A) limits the adjustment of patent term, as follows:

> to the extent that the periods of delay attributable to grounds specified in paragraph (1) overlap, the period of any adjustment granted under this subsection shall not exceed the actual number of days the issuance of the patent was delayed.

Likewise, 35 CFR 1.703(f) provides that:

> To the extent that periods of delay attributable to the grounds specified in § 1.702 overlap, the period of adjustment granted under this section shall not exceed the actual number of days the issuance of the patent was delayed.

As explained in *Explanation of 37 CFR 1.703(f) and of the United States Patent and Trademark Office Interpretation of 35 U.S.C. 154(b)(2)(A)*, 69 Fed. Reg. 34283 (June 21, 2004), the Office interprets 35 U.S.C. 154(b)(2)(A) as permitting either patent term adjustment under 35 U.S.C. 154(b)(1)(A)(i)-(iv), or patent term adjustment under 35 U.S.C. 154(b)(1)(B), but not as permitting patent term adjustment under both 35 U.S.C. 154(b)(1)(A)(i)-(iv) and 154(b)(1)(B). Accordingly, the Office implements the overlap provision as follows:

> If an application is entitled to an adjustment under 35 U.S.C. 154(b)(1)(B), the entire period during which the application was pending (except for periods excluded under 35 U.S.C. 154(b)(1)(B)(i)-(iii)), and not just the period beginning three years after the actual filing date of the application, is the period of delay under 35 U.S.C. 154(b)(1)(B) in determining whether periods of delay overlap under 35 U.S.C. 154(b)(2)(A). Thus, any days of delay for Office issuance of the patent more than 3 years after the filing date of the application, which overlap with the days of patent term adjustment accorded prior to the issuance of the patent will not result in any additional patent term adjustment. See 35 U.S.C. 154(b)(1)(B), 35 U.S.C. 154(b)(2)(A), and 37 CFR § 1.703(f). See *Changes to Implement Patent Term Adjustment Under Twenty Year Term; Final Rule*, 65 Fed. Reg. 56366 (Sept. 18, 2000). See also *Revision of Patent Term Extension and Patent Term Adjustment Provisions; Final Rule*, 69 Fed. Reg. 21704 (April

22, 2004), 1282 Off. Gaz. Pat. Office 100 (May 18, 2004). See also *Explanation of 37 CFR 1.703(f) and of the United States Patent and Trademark Office Interpretation of 35 U.S.C. 154(b)(2)(A),* 69 Fed. Reg. 34283 (June 21, 2004).

As stated in the *Explanation of 37 CFR 1.703(f) and of the United States Patent and Trademark Office Interpretation of 35 U.S.C. 154(b)(2)(A)*, the Office has consistently taken the position that if an application is entitled to an adjustment under the three-year pendency provision of 35 U.S.C. 154(b)(1)(B), the entire period during which the application was pending before the Office (except for periods excluded under 35 U.S.C. 154(b)(1)(B)(i)-(iii)), and not just the period beginning three years after the actual filing date of the application, is the relevant period under 35 U.S.C. 154(b)(1)(B) in determining whether periods of delay "overlap" under 35 U.S.C. 154(b)(2)(A).

This interpretation is consistent with the statute. Taken together the statute and rule provide that to the extent that periods of delay attributable to grounds specified in 35 U.S.C. 154(b)(1) and in corresponding § 1.702 overlap, the period of adjustment granted shall not exceed the actual number of days the issuance of the patent was delayed.

As such, the period for over three-year pendency does not overlap only to the extent that the actual dates in the period beginning three years after the date on which the application was filed overlap with the actual dates in the periods for failure of the Office to take action within specified time frames. In other words, consideration of the overlap does not begin three years after the filing date of the application.

In this instance, the relevant period under 35 U.S.C. 154(b)(1)(B) in determining whether periods of delay "overlap" under 35 U.S.C. 154(b)(2)(A) is the entire period during which the application was pending before the Office, July 7, 2003, to the date the patent issued on September 8, 2009. (There were no periods excluded under 35 U.S.C. 154(b)(1)(B)(i)-(iii)). Prior to the issuance of the patent, 1192 days of patent term adjustment were accorded for the Office failing to respond within a specified time frame during the pendency of the application. All of the 1159 days for Office delay in issuing the patent overlap with the 1192 days of Office delay. During that time, the issuance of the patent was delayed by 1192 days, not 1192 + 1159 days. The Office experienced 1192 days of examination delay. Otherwise, the Office took all actions set forth in 37 CFR 1.702(a) within the prescribed time frames. Nonetheless, given the 1192 days of Office delay and the time allowed within the time frames for processing and examination and the 20 days of applicant delay, as of the date the patent issued, the application was pending three years and 1159 days. The Office did not delay 1192 days and then an additional 1159 days. Accordingly, 1192 days of patent term adjustment (not 1192 and 1159 days) was properly entered. The period of delay of 1159 days attributable to the delay in the issuance of the patent overlaps with the adjustment of 1192 days attributable to grounds specified in § 1.702(a)(1). Entry of

both periods is not warranted. 1192 days is determined to be the actual number of days that the issuance of the patent was delayed, considering the 1159 days over three years to the issuance of the patent.

Accordingly, at issuance, the Office properly entered 0 additional days of patent term adjustment for the Office taking in excess of three years to issue the patent.

In view thereof, no adjustment to the patent term will be made.

Telephone inquiries specific to this decision should be directed to Senior Petitions Attorney Patricia Faison-Ball at (571) 272-3212.

/Kery A. Fries/

Kery A. Fries
Senior Legal Advisor
Office of Patent Legal Administration
Office of Deputy Commissioner
for Examination Policy

UNITED STATES PATENT AND TRADEMARK OFFICE

Commissioner for Patents
United States Patent and Trademark Office
P.O. Box 1450
Alexandria, VA 22313-1450
www.uspto.gov

BRUCE E. LILLING
LILLING & LILLING P.C.
P.O. BOX 560
GOLDEN BRIDGE, NY 10526

COPY MAILED

APR 29 2005

OFFICE OF PETITIONS

In re Application of :
Dan G. Handelsman :
Application No. 10/615,175 : ON PETITION
Filed: July 8, 2003 :
Attorney Docket No. 588/1 :

This is a decision on the petition under 37 CFR 1.137(a), filed March 23, 2005, to revive the above-identified application.

The petition is **dismissed**.

Any request for reconsideration of this decision must be submitted within TWO (2) MONTHS from the mail date of this decision. Extensions of time under 37 CFR 1.136(a) are permitted. The reconsideration request should include a cover letter entitled "Renewed Petition under 37 CFR 1.137(a)."

This application became abandoned for failure to timely file corrected drawings on or before December 23, 2004 as required by the Notice of Allowability mailed September 23, 2004. Accordingly, this application became abandoned on December 24, 2004. A Notice of Abandonment was mailed on February 18, 2005.

A grantable petition to revive an abandoned application under 37 CFR 1.137(a) must be accompanied by:

(1) The required reply, unless previously filed. In a nonprovisional application abandoned for failure to prosecute, the required reply may be met by the filing of a continuing application. In an application or patent, abandoned or lapsed for failure to pay the issue fee or any portion thereof, the required reply must be the payment of the issue fee or any outstanding balance thereof;

(2) The petition fee as set forth in § 1.17(l);

(3) A showing to the satisfaction of the Commissioner that the entire delay in filing the required reply from the due date for the reply until the filing of a grantable petition pursuant to this paragraph was unavoidable; and

(4) Any terminal disclaimer (and fee as set forth in § 1.20 (d)) required pursuant to paragraph (c) of this section.

This petition lacks item (3), above.

Decisions on reviving abandoned applications on the basis of "unavoidable" delay have adopted the reasonably prudent person standard in determining if the delay was unavoidable:

> The word 'unavoidable' . . . is applicable to ordinary human affairs, and requires no more or greater care or diligence than is generally used and observed by prudent and careful men in relation to their most important business. It permits them in the exercise of this care to rely upon the ordinary and trustworthy agencies of mail and telegraph, worthy and reliable employees, and such other means and instrumentalities as are usually employed in such important business. If unexpectedly, or through the unforeseen fault or imperfection of these agencies and instrumentalities, there occurs a failure, it may properly be said to be unavoidable, all other conditions of promptness in its rectification being present.

In re Mattullath, 38 App. D.C. 497, 514-15 (1912)(quoting Ex parte Pratt, 1887 Dec. Comm'r Pat. 31, 32-33 (1887)); see also Winkler v. Ladd, 221 F. Supp. 550, 552, 138 USPQ 666, 167-68 (D.D.C. 1963), aff'd, 143 USPQ 172 (D.C. Cir. 1963); Ex parte Henrich, 1913 Dec. Comm'r Pat. 139, 141 (1913). In addition, decisions on revival are made on a "case-by-case basis, taking all the facts and circumstances into account." Smith v. Mossinghoff, 671 F.2d 533, 538, 213 USPQ 977, 982 (D.C. Cir. 1982). Finally, a petition cannot be granted where a petitioner has failed to meet his or her burden of establishing that the delay was "unavoidable." Haines v. Quigg, 673 F. Supp. 314, 316-17, 5 USPQ2d 1130, 1131-32 (N.D. Ind. 1987).

Petitioner asserts incapacitation of the inventor as a cause of the delay. A showing of "unavoidable" delay based upon

incapacitation must establish that petitioner's incapacitation was of such nature and degree as to render petitioner unable to conduct business (*e.g.*, correspond with the Office) during the period between September 23, 2004 and December 23, 2004. Such a showing must be supported by a statement from petitioner's treating physician, and such statement must provide the nature and degree of petitioner's incapacitation during this above-mentioned period.

Accordingly, the showing of record is not sufficient to establish to the satisfaction of the Commissioner that the delay was unavoidable within the meaning of 35 U.S.C. § 133 and 37 CFR 1.137(a).

Further correspondence with respect to this matter should be addressed as follows:

By mail: Mail Stop Petition
Commissioner for Patents
Box 1450
Alexandria, VA 22313

By FAX: (703) 872-9306
Attn: Office of Petitions

By hand: Customer Service Window
Randolph Building
401 Dulany Street
Alexandria, VA 22314

Telephone inquiries should be directed to the undersigned at (571)272-3228.

Edward J. Tannouse
Petitions Attorney
Office of Petitions/Patent
United States Patent and Trademark Office

UNITED STATES PATENT AND TRADEMARK OFFICE

Commissioner for Patents
United States Patent and Trademark Office
P.O. Box 1450
Alexandria, VA 22313-1450
www.uspto.gov

BRUCE E. LILLING
LILLING & LILLING P.C.
P.O. BOX 560
GOLDEN BRIDGE, NY 10526

COPY MAILED

AUG 24 2005

OFFICE OF PETITIONS

In re Application of :
Dan G. Handelsman :
Application No. 10/615,175 :
Filed: July 8, 2003 :
Attorney Docket No. 588/1 :

ON PETITION

This is a decision on the petition under 37 CFR 1.137(b), filed June 28, 2005, to revive the above-identified application.

The petition is **GRANTED**.

This application became abandoned for failure to timely file corrected drawings on or before December 23, 2004 as required by the Notice of Allowability mailed September 23, 2004. Accordingly, this application became abandoned on December 24, 2004. A Notice of Abandonment was mailed on February 18, 2005.

This application is being forwarded to Publishing Division for review of the drawings filed March 23, 2005.

Telephone inquiries concerning this matter may be directed to the undersigned at (571) 272-3228.

Edward J. Tannouse
Petitions Attorney
Office of Petitions
Office of the Deputy Commissioner
for Patent Examination Policy

UNITED STATES PATENT AND TRADEMARK OFFICE

Commissioner for Patents
United States Patent and Trademark Office
P.O. Box 1450
Alexandria, VA 22313-1450
www.uspto.gov

APR - 5 2005

DARBY & DARBY, PC
805 THIRD AVENUE
NEW YORK, NY 10022

In re Application of	:
William e. Bay et al	:
Serial No.: 10/615,213	: PETITION DECISION
Filed: July 7, 2003	:
Attorney Docket No.: 01946/100G906	:

This is in response to the petition under 37 CFR 1.181, filed January 5, 2005, requesting withdrawal of abandonment based on timely filing of a reply.

A review of the file history shows that the examiner mailed an Office action to applicants on June 23, 2004, setting a three month shortened statutory period for reply. A Notice of Abandonment was mailed to applicants on December 29, 2004. Applicants state that a reply was mailed to the Office on December 23, 2004, including a three month extension of time request and fee, and provide a Postal Office Express Mail tracking form indicating receipt by the Office on December 27, 2004 (the next business day due to holiday closures). The reply was not entered into the application until January. Thus the Notice of Abandonment mailed within such a short period after the expiration of the maximum statutory period for reply was mailed in error. In view of the above, the Notice of Abandonment which was mailed in error is withdrawn and the application restored to pending status with the mailing of this decision.

The petition is **GRANTED**.

The application will be forwarded to the examiner for further consideration.

Should there be any questions about this decision please contact William R. Dixon, Jr., by letter addressed to Director, TC 1600, at the address listed above, or by telephone at 571-272-0519 or by facsimile sent to the general Office facsimile number 571-273-8300.

Bruce M. Kisliuk
Director, Technology Center 1600

UNITED STATES PATENT AND TRADEMARK OFFICE

Commissioner for Patents
United States Patent and Trademark Office
P.O. Box 1450
Alexandria, VA 22313-1450
www.uspto.gov

FINNEGAN HENDERSON FARABOW
GARRETT & DUNNER LLP
901 NEW YORK AVE NW
WASHINGTON DC 20001-4413

COPY MAILED

JUL 20 2006

OFFICE OF PETITIONS

In re Application of	:	
Fukuhara, et al.	:	
Application No. 10/615,228	:	ON PETITION
Filed: July 9, 2003	:	
Attorney Docket No. 03180.0327	:	

This is a decision on the petition to withdraw the holding of abandonment under 37 CFR 1.181, filed June 2, 2006.

The petition is **GRANTED**.

This application was held abandoned for failure to timely reply to the Restriction Requirement mailed April 12, 2005. This Office action set a shortened period for reply of one (1) month. No reply having been received, the above identified application became abandoned on May 13, 2005. A Notice of Abandonment was mailed on May 5, 2006.

Petitioner contends that he did timely file a reply to the April 12, 2005 Office action. In support, petitioner has included a copy of a properly itemized, USPTO date-stamped receipt, itemizing that a "Response to Restriction Requirement" was filed on May 12, 2005.

A postcard receipt which itemizes and properly identifies the items which are being filed serves as *prima facie* evidence of receipt in the Office of all items listed thereon on the date stamped thereon by the Office. See MPEP 503.

In view thereof, **THE HOLDING OF ABANDONMENT IS WITHDRAWN.**

Given the basis for granting this petition, no petition fee was required and none has been charged.

The matter is being forwarded to Group Art Unit 1756 for consideration of the Response to Restriction Requirement filed May 12, 2005 (copy re-supplied on petition filed June 2, 2006).

Telephone inquiries regarding this decision should be directed to the undersigned at (571)272-3207.

Cliff Congo
Petitions Attorney
Office of Petitions

UNITED STATES PATENT AND TRADEMARK OFFICE

Commissioner for Patents
United States Patent and Trademark Office
P.O. Box 1450
Alexandria, VA 22313-1450
www.uspto.gov

COPY MAILED

FEB 0 5 2007

OFFICE OF PETITIONS

Finnegan Henderson Farabow Garrett & Dunner LLP
901 New York Avenue NW
Washington DC 20001-4413

In re Application of
Fukuhara et al.
Application No. 10/615,228
Filed: July 9, 2003
Atty Docket: 3180.0327

: DECISION GRANTING PETITION

This decision is in response to applicants' "APPLICATION FOR PATENT TERM ADJUSTMENT UNDER TO 37 CFR § 1.705(b)" timely[1] filed on November 29, 2006 requesting that the Office adjust the PTA from zero (0) days to a determination of six hundred and one (601) at the time of the mailing of the notice of allowance.

Applicants' application for PTA is **GRANTED-in part.** The Office will make an adjustment to the PTA determination from a determination of zero days to a determination of 468 days.

Applicants request that the Office erred in asserting that the response to the restriction requirement was not received in the Office until June 2, 2006.. Applicants assert that the actual response date to the restriction requirement occurred on May 12, 2005. Accordingly, applicants assert that the three hundred and twenty-five day reduction by the USPTO is in error. Applicants further assert that the Office further delayed in responding to the May 12, 2005 reply to the restriction requirement until October 3, 2006. Accordingly, applicants assert that the Office missed the requirements of 37 CFR 1.702(a)(2) by a period of 386 additional days. Therefore, applicants assert that the total amount of PTA at the time of the mailing of the notice of allowance is 601 days (215 + 386=601). Applicants do not find that there any applicant delays.

Applicants arguments are persuasive to the extent herein determined. A review of the records reveal that Applicant did in fact respond to the restriction requirement within three months. See MPEP 503 which states that postcard stamp which is prima facie proof of date of submission. Accordingly, the 325 day delay by applicant is in error in that the Office entered June 2, 2006 as the reply date rather than the actual date of May 12, 2005. Furthermore, the office erred by failing to provide additional time under 37 CFR 1.702(a)(2) because the Office did not reply to the May 12, 2005 election until October 2,2006. The delay amounted to 386 days as suggested by applicants. However, the USPTO does find that applicants failed to engage under 37 CFR 1.704(c)(8) in that applicant submitted a supplemental "paper" (i.e., the IDS submission of September 22, 2005). Accordingly, the amount of delay under 37 CFR 1.704(c)(8) is 133 days.[2]

---

[1]Issue fee paid on 11/29/2006.

[2]Delay began on May 13, 2005 and ended on September 22, 2005.

The Office notes that the IDS submission of September 22, 2005 did not include a 1.704(d) waiver to obviate the reduction under 37 CFR 1.704(c)(8). Accordingly, the correct amount of PTA at the time of the mailing of the notice of allowance is 468 days.

After the mailing of this decision, the Office will forward this application to the Office of Patent Publications for a prompt issuance of the application. Any delays pursuant to 37 CFR 1.702(a)(4) or 1.702(b) will be included in the issue notification letter determination that is mailed to applicants approximately three weeks prior to the issue date.

The Office has assessed the $200.00 fee associated with this application. No additional fees are required by applicant.

Any questions concerning this decision should be directed to Kery A. Fries, Senior Legal Advisor, Office of Patent Legal Administration at 571-272-7757.

Kery A Fries

Kery Fries
Senior Legal Advisor
Office of Patent Legal Administration
Office of Deputy Commissioner
for Patent Examination Policy.

Cc: Copy of adjusted PAIR calculation

PALM INTRANET

Day : Saturday
Date: 2/3/2007
Time: 11:24:02

PTA Calculations for Application: 10/615228

Application Filing Date:	07/09/2003	PTO Delay (PTO):	216
Issue Date of Patent:		Three Years:	0
Pre-Issue Petitions:	0	Applicant Delay (APPL):	325
Post-Issue Petitions:	0	Total PTA (days):	468
PTO Delay Adjustment:	577		

File Contents History

Number	Date	Contents Description	PTO	APPL	START
51	02/03/2007	ADJUSTMENT OF PTA CALCULATION BY PTO		1	
50	02/03/2007	ADJUSTMENT OF PTA CALCULATION BY PTO		133	
49	02/03/2007	ADJUSTMENT OF PTA CALCULATION BY PTO	386		
48	02/03/2007	ADJUSTMENT OF PTA CALCULATION BY PTO	325		
41	10/03/2006	MAIL NOTICE OF ALLOWANCE	1		33
40	10/03/2006	MAIL EXAMINER'S AMENDMENT			
39	09/13/2006	ISSUE REVISION COMPLETED			
38	09/13/2006	NOTICE OF ALLOWANCE DATA VERIFICATION COMPLETED			
37	09/13/2006	CASE DOCKETED TO EXAMINER IN GAU			
36	09/12/2006	EXAMINER'S AMENDMENT COMMUNICATION			
35	09/12/2006	NOTICE OF ALLOWABILITY			
34	08/09/2006	DATE FORWARDED TO EXAMINER			
33	06/02/2006	RESPONSE TO ELECTION / RESTRICTION FILED		325	22
32	07/20/2006	MAIL NOTICE OF RESCINDED ABANDONMENT			
31	07/28/2006	NOTICE OF RESCINDED ABANDONMENT IN TCS			
30	07/20/2006	PETITION TO REVIVE APPLICATION - GRANTED			
29	06/02/2006	PETITION ENTERED			
28	05/05/2006	MAIL ABANDONMENT FOR FAILURE TO RESPOND TO OFFICE ACTION			
27	05/03/2006	ABANDONMENT FOR FAILURE TO RESPOND TO OFFICE ACTION			
26	09/22/2005	INFORMATION DISCLOSURE STATEMENT CONSIDERED			
25	07/09/2003	INFORMATION DISCLOSURE STATEMENT CONSIDERED			

24	09/22/2005	REFERENCE CAPTURE ON IDS			
23	09/22/2005	INFORMATION DISCLOSURE STATEMENT (IDS) FILED			
22	04/12/2005	MAIL RESTRICTION REQUIREMENT	215		-1
21	04/11/2005	REQUIREMENT FOR RESTRICTION / ELECTION			
20	04/08/2005	CORRESPONDENCE ADDRESS CHANGE			
19	02/22/2005	CASE DOCKETED TO EXAMINER IN GAU			
18	07/06/2004	CASE DOCKETED TO EXAMINER IN GAU			
17	07/06/2004	IFW TSS PROCESSING BY TECH CENTER COMPLETE			
16	07/09/2003	INFORMATION DISCLOSURE STATEMENT (IDS) FILED			
15	02/28/2004	TRANSFER INQUIRY TO GAU			
14	10/08/2003	APPLICATION RETURN FROM OIPE			
13	10/09/2003	APPLICATION IS NOW COMPLETE			
12	10/08/2003	APPLICATION RETURN TO OIPE			
11	10/08/2003	APPLICATION RETURN FROM OIPE			
10	10/08/2003	APPLICATION RETURN TO OIPE			
9	10/07/2003	APPLICATION RETURN FROM OIPE			
8	10/08/2003	APPLICATION IS NOW COMPLETE			
7	10/07/2003	APPLICATION RETURN TO OIPE			
6	10/06/2003	APPLICATION DISPATCHED FROM OIPE			
5	10/07/2003	APPLICATION IS NOW COMPLETE			
4	09/25/2003	CASE CLASSIFIED BY L&R			
3	09/25/2003	CLEARED BY OIPE CSR			
2	08/17/2003	IFW SCAN & PACR AUTO SECURITY REVIEW			
1	07/09/2003	INITIAL EXAM TEAM NN			

Search Another: Application# [ ] Search

EXPLANATION OF PTA CALCULATION

EXPLANATION OF PTE CALCULATION

To go back use Back button on your browser toolbar.

Back to PALM | ASSIGNMENT | OASIS | Home page

UNITED STATES PATENT AND TRADEMARK OFFICE

Commissioner for Patents
United States Patent and Trademark Office
P.O. Box 1450
Alexandria, VA 22313-1450
www.uspto.gov

YOUNG & THOMPSON
745 SOUTH 23RD STREET
2ND FLOOR
ARLINGTON VA 22202

COPY MAILED

FEB 15 2006

OFFICE OF PETITIONS

In re Application of	:	
George, Richard Warrington	:	
Application No. 10/615,235	:	ON PETITION
Filed: July 9, 2003	:	
Attorney Docket No. 3008-1028	:	

This is a decision on the petition under 37 C.F.R. § 1.137(b), filed February 8, 2006, to revive the above-identified application.

The petition is **GRANTED.**

The petition satisfies the conditions for revival pursuant to the provisions of 37 CFR 1.137(b) in that (1) the reply in the form of an Amendment; (2) the petition fee; and (3) the required statement of unintentional delay have been received. Accordingly, the response has been accepted as having been unintentionally delayed.

This matter is being referred to Technology Center 2800 for further examination on the merits.

Telephone inquiries regarding this decision should be directed to the undersigned at (571) 272-3282.

Liana Chase
Petitions Examiner
Office of Petitions

UNITED STATES PATENT AND TRADEMARK OFFICE

COMMISSIONER FOR PATENTS
UNITED STATES PATENT AND TRADEMARK OFFICE
P.O. BOX 1450
ALEXANDRIA, VA 22313-1450
WWW.USPTO.GOV

Paper No. None

Claude Vachon
1108 rue De La Brunante
St-Nicolas QC G7A 4S9 CA CANADA

COPY MAILED

FEB 28 2006

OFFICE OF PETITIONS

In re Application of	:	
Claude Vachon	:	
Application No. 10/615,270	:	DECISION ON PETITION
Filed: July 9, 2003	:	UNDER 37 C.F.R. §1.181(A)
Title: WRENCH EXTENSION BAR	:	
WITH ADAPTER	:	

This is a decision on the petition under 37 C.F.R. §1.181(a) to withdraw the holding of abandonment, filed on November 26, 2004[1].

The Office regrets the period of delay in issuing this decision.

The above-identified application became abandoned for failure to reply in a timely manner to the non-final Office action, mailed April 26, 2004, which set a shortened statutory period for reply of three (3) months. No response was received, and no extensions of time under the provisions of 37 C.F.R. §1.136(a) were requested. Accordingly, the above-identified application became abandoned on July 27, 2004. A notice of abandonment was mailed November 18, 2004.

With the present petition, Petitioner has included an amendment, along with a certificate of facsimile transmission dated July 22, 2004. It is noted that the facsimile number to which this communication was sent appears in the non-final Office action as the facsimile number for unofficial documents.

Considering the facts and circumstances of the delay at issue, as set forth on petition, it is concluded that petitioner has met his burden of establishing that a timely response was timely submitted, pursuant to 37 C.F.R. §1.8.

---

1 The electronic file record indicates that a second petition was filed on October 7, 2005.

Accordingly, the petition under 37 C.F.R. §1.181(a) is **GRANTED**. The holding of abandonment is **WITHDRAWN**.

The Technology Center will be notified of this decision.

Telephone inquiries regarding *this decision* should be directed to the undersigned at (571) 272-3225. All other inquiries concerning examination procedures or status of the application should be directed to the Technology Center.

Paul Shanoski
Senior Attorney
Office of Petitions
United States Patent and Trademark Office

UNITED STATES PATENT AND TRADEMARK OFFICE

COMMISSIONER FOR PATENTS
UNITED STATES PATENT AND TRADEMARK OFFICE
P.O. BOX 1450
ALEXANDRIA, VA 22313-1450
www.uspto.gov

Michael M. Rickin, Esq.
ABB Inc.
Legal Department - 4U6
29801 Euclid Avenue
Wickliffe, OH 44092-2530

COPY MAILED
FEB 22 2008
OFFICE OF PETITIONS

In re Application of Todd M. Hess, et. al. Application No. 10/615,284 Filed: July 8, 2003 Attorney Docket No. E20020410	: : : : : :	ON PETITION

This is a decision on the petition under 37 CFR 1.137(b), filed on May 4, 2007, to revive the above-identified application.

The application became abandoned for failure to respond to the Notice of Allowability mailed November 28, 2006. A Notice of Abandonment was mailed on March 23, 2007.

There is no indication that the person signing the instant petition was ever given a power of attorney or authorization of agent to prosecute the above-identified application. In accordance with 37 CFR 1.34(a), the signature of Paul R. Katterle appearing on the petition shall constitute a representation to the United States Patent and Trademark Office that he/she is authorized to represent the particular party in whose behalf he/she acts.

The petition satisfies the requirements of 37 CFR 1.137(b), in that, petitioner has supplied (1) the reply in the form of four (4) sheets of replacement drawings containing Figures 1-4; (2) the petition fee of $1,500; and (3) a proper statement of unintentional delay. Therefore, the petition is **GRANTED**.

This application file is being referred to the Office of Data Management to be processed into a patent.

Telephone inquiries concerning this decision should be directed to the undersigned at (571) 272-3226.

Andrea Smith
Petitions Examiner
Office of Petitions

UNITED STATES PATENT AND TRADEMARK OFFICE

Commissioner for Patents
United States Patent and Trademark Office
P.O. Box 1450
Alexandria, VA 22313-1450
www.uspto.gov

BEYER WEAVER LLP
P.O. BOX 70250
OAKLAND, CA 94612-0250

COPY MAILED

JUN 29 2007

OFFICE OF PETITIONS

In re Application of :
Makoto Maki et al :
Application No. 10/615,285 : ON PETITION
Filed: July 7, 2003 :
Attorney Docket No. MES1P076/PF10I345/RCE1-US

This is a decision on the petition, filed June 26, 2007 under 37 CFR 1.313(c)(2) to withdraw the above-identified application from issue after payment of the issue fee.

The petition is **GRANTED**.

The above-identified application is withdrawn from issue for consideration of a submission under 37 CFR 1.114 (request for continued examination). See 37 CFR 1.313(c)(2).

Petitioner is advised that the issue fee paid on June 20, 2007 in the above-identified application cannot be refunded. If, however, the above-identified application is again allowed, petitioner may request that it be applied towards the issue fee required by the new Notice of Allowance.[1]

Telephone inquiries should be directed to Irvin Dingle at (571) 272-3210.

This matter is being referred to Technology Center AU 2617 for processing of the request for continued examination under 37 CFR 1.114 and for consideration of the concurrently filed Information Disclosure Statement.

Irvin Dingle
Petitions Examiner
Office of Petitions

---

[1] The request to apply the issue fee to the new Notice may be satisfied by completing and returning the new Issue Fee Transmittal Form PTOL-85(b), which includes the following language thereon: Commissioner for Patents is requested to apply the Issue Fee and Publication Fee (if any) or re-apply any previously paid issue fee to the application identified above. Petitioner is advised that, whether a fee is indicated as being due or not, the Issue Fee Transmittal Form **must** be completed and timely submitted to avoid abandonment. Note the language in bold text on the first page of the Notice of Allowance and Fee(s) Due (PTOL-85).

UNITED STATES PATENT AND TRADEMARK OFFICE

Commissioner for Patents
United States Patent and Trademark Office
P.O. Box 1450
Alexandria, VA 22313-1450
www.uspto.gov

FITZPATRICK CELLA HARPER & SCINTO
30 ROCKEFELLER PLAZA
NEW YORK NY 10112

COPY MAILED

JUL 07 2008

OFFICE OF PETITIONS

In re Application of	:	
Kubota et al.	:	
Application No.: 10/615289	:	DECISION ON
Filing or 371(c) Date: 07/09/2003	:	PETITION
Attorney Docket Number: 03500.017379	:	

This is a decision in response to the Request for Withdrawal of Erroneous Notice of Abandonment, Contingent Petition for Withdrawal of Notice of Abandonment, and Resubmission of Amendment which was Deemed to be Non-Compliant," May 8, 2008. The petition is properly treated as a Petition To Withdraw Holding of Abandonment under 37 CFR 1.181.

This Petition is hereby **dismissed**.

Any further petition must be submitted within TWO (2) MONTHS from the mail date of this decision. Extensions of time under 37 CFR 1.136(a) are permitted. The reconsideration request should include a cover letter entitled "Renewed Petition under [insert the applicable code section]." This is **not** final agency action within the meaning of 5 U.S.C. § 704.

The above-identified application became abandoned for failure to timely and properly reply to the Notice of Noncompliant Amendment ("Notice"), mailed August 29, 2007. The Notice set a one (1) month period for reply, and provided for extensions of time under 37 CFR 1.136(a). Applicant filed a reply to the Notice on October 25, 2007; however, the reply was not a complete and proper reply. No complete and proper reply having been received, the application became abandoned on September 30, 2007. A Notice of Abandonment was mailed April 8, 2008.

The Notice of Abandonment provides the following background: A first Notice of Noncompliant Amendment was mailed March 15, 2005, requiring replacement drawings and an amendment in compliance with 37 CFR 1.121. Applicants filed a response on April 18, 2005, with another non-compliant amendment. The amendment was non-compliant because the specification did not include marked-up paragraphs. Marked up paragraphs were included in "Applicant's Arguments/Remarks Made in an Amendment." Also noted was that the claims were not separately listed.

A second Notice of Noncompliant Amendment was mailed May 31, 2007, but listed only the failure to separately list all claims as the reason for noncompliance. The second Notice did not

mention the failure to present replacement drawings. The second Notice also did not mention that marked up paragraphs were included in "Applicant's Arguments/Remarks Made in an Amendment," instead of the specification.

Applicant's responded to the second Notice on June 8, 2007, with another non-responsive amendment and no replacement drawings. Applicants presented a clean copy of the amended specification for amendment, and with their remarks set forth the marked up paragraphs. No amendment to the specification in compliance with 37 CFR 1.121 was filed on June 18, 2007.

A third Notice of Noncompliant Amendment was mailed On August 29, 2007 requiring replacement drawings and a proper amendment to the specification. Applicants filed a response on October 25, 2007; however, again failed to file a proper amendment to the specification. Instead, Applicants argued that the marked up paragraphs filed June 8, 2007 were sufficient to amend the specification.

Petition under 37 CFR 1.181

Applicant files the present petition and states, in relevant part, that "it was realized for the first time that what the examiner was requesting was [their] version of the January 3, 2005 Amendment, wherein the changes to the equations appeared with their entire paragraphs in the body of the Amendment showing to corrections therein, rather than in the attached marked up sheets. Petition at p.2.

Applicable Law, Rules and MPEP

37 CFR 1.135, Abandonment for failure to reply within time period, provides that

> (a) If an applicant of a patent application fails to reply within the time period provided under § 1.134 and § 1.136, the application will become abandoned unless an Office action indicates otherwise.
> (b) Prosecution of an application to save it from abandonment pursuant to paragraph (a) of this section must include such complete and proper reply as the condition of the application may require. The admission of, or refusal to admit, any amendment after final rejection or any amendment not responsive to the last action, or any related proceedings, will not operate to save the application from abandonment.

MPEP 711.03(c)

Analysis and conclusion

The application became abandoned for failure to timely reply to the final Office action. Applicant has failed to demonstrate that a complete and proper reply to the office action was filed. Applicant admits that after this Office issued the Notice of Abandonment, it realized for the first time what the Examiner was requesting. While Applicants have demonstrated that timely replies to the Notices were filed, the Replies were not complete and proper.

Applicant is advised that, as provided in the Manual of Patent Examining Procedure,

> [w]here an applicant contends that the application is not in fact abandoned (e.g., there is disagreement as to the sufficiency of the reply, or as to controlling dates), a petition under 37 CFR 1.181(a) requesting withdrawal of the holding of abandonment is the appropriate course of action, and such petition does not require a fee. Where there is no dispute as to whether an application is abandoned (e.g., the applicant's contentions merely involve the cause of abandonment), a petition under 37 CFR 1.137 (accompanied by the appropriate petition fee) is necessary to revive the abandoned application.

MPEP 711.03(c).

Here, there is no dispute as to the sufficiency of the reply. Applicant acknowledges that it was realized for the first time that what the examiner was requesting was [their] version of the January 3, 2005 Amendment, wherein the changes to the equations appeared with their entire paragraphs in the body of the Amendment showing to corrections therein, rather than in the attached marked up sheets. There is no dispute as to whether the application is abandoned, Applicant's contentions merely involve the cause of abandonment. A petition to revive the application (and fee) is the appropriate course of action. The holding of abandonment is proper, and will not be withdrawn.

Alternative venue

Applicant is strongly urged to file a petition stating that the delay was unintentional. An "unintentional" petition under 37 CFR 1.137(b) must be accompanied by the required fee.

The filing of a petition under 37 CFR 1.137(b) cannot be intentionally delayed and therefore must be filed promptly. A person seeking revival due to unintentional delay can not make a statement that the delay was unintentional unless the entire delay, including the delay from the date it was discovered that the application was abandoned until the filing of the petition to revive under 37 CFR 1.137(b), was unintentional. A statement that the delay was unintentional is not appropriate if petitioner intentionally delayed the filing of a petition for revive under 37 CFR 1.137(b).

Further correspondence with respect to this matter should be addressed as follows:

By mail:	Director for Patents PO Box 1450 Alexandria, VA 22313-1450
By FAX:	(571) 273-8300 Attn: Office of Petitions
By hand:	Customer Service Window Randolph Building 401 Dulany Street

Alexandria, VA 22314

Telephone inquiries concerning the Amendment should be directed to the Examiner. Questions regarding this decision should be directed to the undersigned at (571) 272-3232.

Derek L. Woods
Attorney
Office of Petitions

UNITED STATES PATENT AND TRADEMARK OFFICE

Commissioner for Patents
United States Patent and Trademark Office
P.O. Box 1450
Alexandria, VA 22313-1450
www.uspto.gov

FITZPATRICK CELLA HARPER & SCINTO
30 ROCKEFELLER PLAZA
NEW YORK NY 10112

COPY MAILED

OCT 2 7 2008

OFFICE OF PETITIONS

In re Application of	:	
Kubota et al.	:	
Application No.: 10/615289	:	DECISION ON
Filing or 371(c) Date: 07/09/2003	:	PETITION
Attorney Docket Number: 03500.017379	:	

This is a decision in response to the Renewed Petition Under 37 C.F.R. 1.181(a) and 37 C.F.R. 1,137(b) for Withdrawal of Notice of Abandonment, and Submission of Amendment which was Deemed to be Non-Compliant," filed September 8, 2008.

This Petitions are hereby **dismissed**.

The above-identified application became abandoned for failure to timely and properly reply to the Notice of Noncompliant Amendment ("Notice"), mailed August 29, 2007. The Notice set a one (1) month period for reply, and provided for extensions of time under 37 CFR 1.136(a). Applicant filed a reply to the Notice on October 25, 2007; however, the reply was not a complete and proper reply. No complete and proper reply having been received, the application became abandoned on September 30, 2007. A Notice of Abandonment was mailed April 8, 2008.

The Notice of Abandonment provides the following background: A first Notice of Noncompliant Amendment was mailed March 15, 2005, requiring replacement drawings and an amendment in compliance with 37 CFR 1.121. Applicants filed a response on April 18, 2005, with another non-compliant amendment. The amendment was non-compliant because the specification did not include marked-up paragraphs. Marked up paragraphs were included in "Applicant's Arguments/Remarks Made in an Amendment." Also noted was that the claims were not separately listed.

A second Notice of Noncompliant Amendment was mailed May 31, 2007, but listed only the failure to separately list all claims as the reason for noncompliance. The second Notice did not mention the failure to present replacement drawings. The second Notice also did not mention that marked up paragraphs were included in "Applicant's Arguments/Remarks Made in an Amendment," instead of the specification.

Applicant's responded to the second Notice on June 8, 2007, with another non-responsive amendment and no replacement drawings. Applicants presented a clean copy of the amended

specification for amendment, and with their remarks set forth the marked up paragraphs. No amendment to the specification in compliance with 37 CFR 1.121 was filed on June 18, 2007.

A third Notice of Noncompliant Amendment was mailed On August 29, 2007 requiring replacement drawings and a proper amendment to the specification. Applicants filed a response on October 25, 2007; however, again failed to file a proper amendment to the specification. Instead, Applicants argued that the marked up paragraphs filed June 8, 2007 were sufficient to amend the specification.

May 8, 2008 Petition under 37 CFR 1.181

Applicant filed a petition to withdraw the holding of abandonment on May 8, 2008, wherein Applicant stated, in relevant part, that "it was realized for the first time that what the examiner was requesting was [their] version of the January 3, 2005 Amendment, wherein the changes to the equations appeared with their entire paragraphs in the body of the Amendment showing to corrections therein, rather than in the attached marked up sheets." Petition at p.2.

Decision on Petition mailed July 7, 2008

The petition was dismissed in a Decision mailed July 7, 2007. The Decision dismissing the petition provided that in the present case, there was no dispute as to the sufficiency of the reply. Applicant acknowledged that it was realized for the first time that what the examiner was requesting was [their] version of the January 3, 2005 Amendment, wherein the changes to the equations appeared with their entire paragraphs in the body of the Amendment showing to corrections therein, rather than in the attached marked up sheets. There was no dispute as to whether the application is abandoned, Applicant's contentions merely involved the cause of abandonment.

The present renewed petition under 37 CFR 1.181

Applicant files the present renewed petition and reiterates that Applicant was unaware that the submission of marked up sheets showing the claim amendments was, or is, improper.

Applicable Law, Rules and MPEP

37 CFR 1.135, Abandonment for failure to reply within time period, provides that

> (a) If an applicant of a patent application fails to reply within the time period provided under § 1.134 and § 1.136, the application will become abandoned unless an Office action indicates otherwise.
> (b) Prosecution of an application to save it from abandonment pursuant to paragraph (a) of this section must include such complete and proper reply as the condition of the application may require. The admission of, or refusal to admit, any amendment after final rejection or any amendment not responsive to the last action, or any related proceedings, will not operate to save the application from abandonment.

MPEP 711.03(c)

Analysis and conclusion

The application became abandoned for failure to timely reply to the final Office action. Applicant has failed to demonstrate that a complete and proper reply to the office action was filed. Applicant admits states that it was unaware that the submission of marked up sheets showing the claim amendments was, or is, improper. However, a review of the prosecution history reveal Applicant was informed that its amendments were not in compliance with 37 CFR 1.121. Moreover, it is Applicant's responsibility to file a complete and proper reply in the first instance, as the condition of the case requires. While Applicants have demonstrated that timely replies to the Notices were filed, the Replies were not complete and proper.

Reconsideration under 37 CFR 1.181

If Petitioner files a second request for reconsideration of petition under 37 CFR 1.181, Petitioner is advised that a*fter a decision on the petition for reconsideration, no further reconsideration or review of the matter will be undertaken by the Commissioner*. Therefore, it is extremely important that petitioner supply **any** and **all** relevant information and documentation with his request for reconsideration. The Director's decision will be based solely on the administrative record in existence.

Petition under 37 CFR 1.137(b)

Applicable Law, Rules and MPEP

A grantable petition pursuant to this paragraph must be accompanied by:
(1) The reply required to the outstanding Office action or notice, unless previously filed;
(2) The petition fee as set forth in § 1.17(m);

(3) A statement that the entire delay in filing the required reply from the due date for the reply until the filing of a grantable petition pursuant to this paragraph was unintentional. The Director may require additional information where there is a question whether the delay was unintentional; and
(4) Any terminal disclaimer (and fee as set forth in § 1.20(d)) required pursuant to paragraph (d) of this section.

Applicant lacks item (1) as set forth above.

Analysis and conclusion

As to item (1), the Examiner has reviewed the Amendment and concluded that the Amendment fails to place the application in condition for allowance. For clarification, and in order to advance prosecution of the application, the Examiner has provided the following comments:

> The amendment within the 09/08/2009 Petition for review of the Abandonment is not proper because applicants did not show the markings of change required by 37 CFR

1.121 and then there is reference to the Abstract on the same page which according of the OG notice of 23 September 2003 is supposed to be on a separate page.

If applicants would take the section marked "SPEC" and dated 05/08/2008 from the Edan (public Pair) and add to the top of the first page "Amendment to the Specification" and enter that as the replacement for the non compliant amendment to the Specification from 05/08/2008 without any amendment to any thing else, then all non compliant issues would be taken care of.

There is already a compliant list of claims and a compliant set of Drawings and a compliant Abstract of record.

Applicants are not required to correct that which is already corrected, so only the properly marked up amendments to the Specification starting on and finishing on a separate set of pages from any thing else is required. The papers need to be clearly marked as an amendment to the specification as well.

The Examiner recommends the following for assistance in this matter: http://www.uspto.gov/web/offices/pac/dapp/opla/preognotice/moreinfoamdtprac.htm.

Further correspondence with respect to this matter should be addressed as follows:

By mail: Director for Patents
PO Box 1450
Alexandria, VA 22313-1450

By FAX: (571) 273-8300
Attn: Office of Petitions

By hand: Customer Service Window
Randolph Building
401 Dulany Street
Alexandria, VA 22314

Inquiries regarding the Amendment should be directed to the Examiner. Telephone inquiries concerning this petition Decision should be directed to the undersigned at (571) 272-3232.

/Derek L. Woods/
Derek L. Woods
Attorney
Office of Petitions

UNITED STATES PATENT AND TRADEMARK OFFICE

Commissioner for Patents
United States Patent and Trademark Office
P.O. Box 1450
Alexandria, VA 22313-1450
www.uspto.gov

FITZPATRICK CELLA HARPER & SCINTO
30 ROCKEFELLER PLAZA
NEW YORK NY 10112

MAILED

MAY 14 2009

OFFICE OF PETITIONS

In re Application of	:	
Kubota et al.	:	
Application No.: 10/615289	:	DECISION ON
Filing or 371(c) Date: 07/09/2003	:	PETITION
Attorney Docket Number: 03500.017379	:	

This is a decision in response to the correspondence filed November 7, 2008. The correspondence is properly treated as a Renewed Petition Under 37 C.F.R. 1.137(b).

This Petition is granted.

The above-identified application became abandoned for failure to timely and properly reply to the Notice of Noncompliant Amendment ("Notice"), mailed August 29, 2007. The Notice set a one (1) month period for reply, and provided for extensions of time under 37 CFR 1.136(a). Applicant filed a reply to the Notice on October 25, 2007; however, the reply was not a complete and proper reply. No complete and proper reply having been received, the application became abandoned on September 30, 2007. A Notice of Abandonment was mailed April 8, 2008.

Applicant filed a petition to revive the application under 37 CFR 1.137(b) on September 8, 2008, which was dismissed in a Decision mailed October 27, 2008, for failing to meet the requirements of a grantable petition under 37 CFR 1.137(b).

Applicant files the present renewed petition and Amendment in response to the Notice. The Examiner has approved the Amendment. The petition satisfies the conditions for revival pursuant to the provisions of 37 CFR 1.137(b) in that the petition includes (1) the reply; (2) the petition fee; and (3) the required statement of unintentional delay[1]. Accordingly, the reply is accepted as having been unintentionally delayed.

The petition fee has been charged to Petitioner's deposit account as authorized in the petition filed September 8, 2008.

---

[1] 37 CFR 1.137(b)(3) requires a statement that "the entire delay in filing the required reply from the due date for the reply until the filing of a grantable petition pursuant to 37 CFR 1.137(b) was unintentional." Since the statement appearing in the original petition filed September 8, 2008, varies from the language required by 37 CFR 1.137(b)(3), the statement is being construed as the required statement. Petitioner must notify the Office if this is **not** a correct reading of the statement appearing in the petition.

This application is being referred to Technology Center Art Unit 1795 for processing of the reply to the Notice filed with the petition on November 7, 2008, in the normal course of business.

Telephone inquiries concerning this decision should be directed to the undersigned at (571) 272-3232.

/Derek L. Woods/
Derek L. Woods
Attorney
Office of Petitions

UNITED STATES PATENT AND TRADEMARK OFFICE

COMMISSIONER FOR PATENTS
UNITED STATES PATENT AND TRADEMARK OFFICE
P.O. BOX 1450
ALEXANDRIA, VA 22313-1450
www.uspto.gov

BAKER & HOSTETLER LLP
WASHINGTON SQUARE
SUITE 1100
1050 CONNECTICUT AVENUE, N.W.
WASHINGTON DC 20036

COPY MAILED

APR 16 2004

OFFICE OF PETITIONS

In re Application of
Harvey Schneider et al.
Application No. 10/615,295
Filed: July 9, 2003
Attorney Docket No. 87334.5620

DECISION ACCORDING STATUS
UNDER 37 CFR 1.47(a)

This is in response to the petition filed under 37 CFR 1.47(a) on October 31, 2003.

The petition is GRANTED.

The above-identified application was filed on July 9, 2003. The application names Harvey Schneider and David Michael Carson as joint inventors but the oath or declaration filed on July 9, 2003, was not executed by Mr. Schneider

Accordingly, on October 10, 2003, a "Notice To File Missing Parts of Application" was mailed, requiring, *inter alia*, an executed oath or declaration, and a surcharge for its late filing. A two month period for reply was set.

In response, on October 31, 2003, a petition under 37 CFR 1.47(a) was filed noting the last known address of Harvey Schneider, the surcharge and an authorization to charge a deposit account for the petition fee along with a declaration signed only by David Michael Carson. A statement by the attorney of record indicates that the application papers were sent to Mr. Schneider via FEDEX and that Mr. Schneider has failed to return an executed oath or declaration in response.

The proof of mailing is in the form of copies of the cover letter mailed and the FEDEX tracking list. The proof shows also that the application papers were mailed on two separate occasions, June 20, 2003 and October 10, 2003. The FEDEX tracking information bears proof that the packages sent were actually delivered. The applicant files this petition alleging that joint inventor Harvey Schneider refuses to sign the oath/declaration and seeks status under 37 CFR 1.47(a).

The proof submitted substantiates the presumption that by his actions, Mr. Schneider refuses to execute the oath and declaration and to cooperate with the filing of the instant application.

A grantable petition under 37 CFR 1.47(a) requires: (1) proof that the non-signing inventor cannot be reached or refuses to sign the oath or declaration after having been presented with the application papers (specification, claims and drawings); (2) an acceptable oath or declaration in compliance with 35 U.S.C. §§ 115 and 116; (3) the petition fee; and (4) a statement of the last known address of the non-signing inventor.

The above-identified application and papers have been reviewed and found in compliance with 37 CFR 1.47(a). In view thereof, this application is hereby accorded Rule 1.47(a) status.

Thus, as provided in Rule 1.47(c), this Office will forward notice of this application's filing to the non-signing inventors at the address given in the petition. Notice of the filing of this application will also be published in the Official Gazette.

Additionally, pursuant to the request filed October 20, 2003, a Corrected Filing Receipt is included correcting the title of the invention to **"ROTOR SPEED CONTROL DEVICE AND METHOD"**

Technology Center 2837 will be notified that the petition under 37 CFR 1.47(a) has been granted and the application will be examined in due course.

Telephone inquiries related to this decision should be directed to the undersigned Petitions Attorney at (703) 305-4497.

Patricia Faison-Ball
Senior Petitions Attorney
Office of Petitions

ATTACHMENT : CORRECTED FILING RECEIPT

UNITED STATES PATENT AND TRADEMARK OFFICE

COMMISSIONER FOR PATENTS
UNITED STATES PATENT AND TRADEMARK OFFICE
P.O. BOX 1450
ALEXANDRIA, VA 22313-1450
www.uspto.gov

HARVEY SCHNEIDER
1872 BUCKS HILL ROAD
SOUTHBURY, CT 06488

COPY MAILED

APR 1 6 2004

OFFICE OF PETITIONS

In re Application of
Harvey Schneider et al.
Application No. 10/615,295
Filed: July 9, 2003
For: ROTOR SPEED CONTROL DEVICE AND METHOD

Dear Mr. Schneider:

You are named as a joint inventor in the above identified United States patent application, filed under the provisions of 35 U.S.C. 116 (United States Code), and 37 CFR 1.47(a), Rules of Practice in Patent Cases. Should a patent be granted on the application you will be designated therein as a joint inventor.

As a named inventor you are entitled to inspect any paper in the file wrapper of the application, order copies of all or any part thereof (at a prepaid cost per 37 CFR 1.19) or make your position of record in the application. Alternatively, you may arrange to do any of the preceding through a registered patent attorney or agent presenting written authorization from you. If you care to join the application, counsel of record (see below) would presumably assist you. Joining in the application would entail the filing of an appropriate oath or declaration by you pursuant to 37 CFR 1.63.

Telephone inquiries regarding this communication should be directed to the undersigned Petitions Attorney at (703) 305-4497. Requests for information regarding your application should be directed to the File Information Unit at 703/308-2733. Information regarding how to pay for and order a copy of the application, or a specific paper in the application, should be directed to Certification Division at 703/308-9726 or 1-800-972-6382 (outside the Washington D.C. area).

Patricia Faison-Ball
Senior Petitions Attorney
Office of Petitions

cc:
BAKER & HOSTETLER LLP
WASHINGTON SQUARE
SUITE 1100
1050 CONNECTICUT AVENUE, N.W.
WASHINGTON DC 20036

SPE: C. Kelly

SPE RESPONSE FOR CERTIFICATE OF CORRECTION

Paper No.: _____

DATE : 6/7/06

TO SPE OF : ART UNIT 1752

SUBJECT : Request for Certificate of Correction for Appl. No.: 10/615,302 Patent No.: 6986980

Please respond to this request for a certificate of correction within 7 days.

Please review the requested changes/corrections as shown in the **COCIN** document(s) in the IFW application image. No new matter should be introduced, nor should the scope or meaning of the claims be changed.

Please complete the response (see below) and forward the completed response to scanning using document code **COCX**.

Lamonte M. Newsome
Certificates of Correction Branch
703-308-9390 ext. 112

Thank You For Your Assistance

The request for issuing the above-identified correction(s) is hereby:

Note your decision on the appropriate box.

- ☒ **Approved** — **All** changes apply.
- ☐ **Approved in Part** — Specify below which changes **do not** apply.
- ☐ **Denied** — State the reasons for denial below.

Comments: _____

_____ **SPE**

1752 **Art Unit**

SPE: C. Kelly

SPE RESPONSE FOR CERTIFICATE OF CORRECTION

Paper No.: _____

DATE : 6/7/06

TO SPE OF : ART UNIT 1752

SUBJECT : Request for Certificate of Correction for Appl. No.: 10/615,302 Patent No.: 6986980

Please respond to this request for a certificate of correction within 7 days.

Please review the requested changes/corrections as shown in the **COCIN** document(s) in the IFW application image. No new matter should be introduced, nor should the scope or meaning of the claims be changed.

Please complete the response (see below) and forward the completed response to scanning using document code **COCX**.

Lamonte M. Newsome
Certificates of Correction Branch
703-308-9390 ext. 112

Thank You For Your Assistance

The request for issuing the above-identified correction(s) is hereby:

Note your decision on the appropriate box.

- ☒ **Approved** — **All** changes apply.
- ☐ **Approved in Part** — Specify below which changes **do not** apply.
- ☐ **Denied** — State the reasons for denial below.

Comments: _____

Cynthia H. Kelly — **SPE**

1752 — **Art Unit**

UNITED STATES PATENT AND TRADEMARK OFFICE

Commissioner for Patents
United States Patent and Trademark Office
P.O. Box 1450
Alexandria, VA 22313-1450
www.uspto.gov

FITZPATRICK CELLA HARPER & SCINTO
30 ROCKEFELLER PLAZA
NEW YORK NY 10112-3800

MAIL

MAR - 2 2007

DIRECTOR OFFICE
TECHNOLOGY CENTER 2600

In re Application of	:	
MASAHIRO NOSHIO	:	DECISION ON REQUEST TO
Application No. 10/615303	:	PARTICIPATE IN PATENT
Filed: July 9, 2003	:	PROSECUTION HIGHWAY
Attorney Docket No. 03500.017393	:	PILOT PROGRAM AND PETITION
	:	TO MAKE SPECIAL UNDER
	:	37 CFR 1.102(d)

This is a decision on the request to participate in the Patent Prosecution Highway (PPH) pilot program and the petition under 37 CFR 1.102(d), filed February 20, 2007, to make the above-identified application special.

The request and petition are **GRANTED**.

A grantable request to participate in the PPH pilot program and petition to make special require:

(1) The U.S. application must validly claim priority under 35 U.S.C. 119(a) to one or more applications filed in the JPO;
(2) Applicant must submit a copy of the allowable/patentable claim(s) from the JPO application(s) along with an English translation thereof and a statement that the English translation is accurate;
(3) All the claims in the U.S. application must sufficiently correspond or be amended to sufficiently correspond to the allowable/patentable claim(s) in the JPO application(s);
(4) Examination of the U.S. application has not begun;
(5) Applicant must submit a copy of all the office actions from each of the JPO application(s) containing the allowable/patentable claim(s) along with an English translation thereof and a statement that the English translation is accurate;
(6) Applicant must submit an IDS listing the documents cited by the JPO examiner in the JPO office action along with copies of documents except U.S. patents or U.S. patent application publications; and
(7) The required petition fee under 37 CFR 1.17(h).

The request to participate in the PPH pilot program and petition comply with the above requirements. Accordingly, the above-identified application has been accorded "special" status.

Telephone inquiries concerning this decision should be directed to John Peng at 571-272-7272.

All other inquiries concerning the examination or status of the application should be directed to Patent Application Information Retrieval (PAIR) system.

The application is being forwarded to the examiner for action on the merits commensurate with this decision.

John Peng
TC 2600
Quality Assurance Specialist

UNITED STATES PATENT AND TRADEMARK OFFICE

UNITED STATES DEPARTMENT OF COMMERCE
United States Patent and Trademark Office
Address: COMMISSIONER FOR PATENTS
P.O. Box 1450
Alexandria, Virginia 22313-1450
www.uspto.gov

APPL NO.	FILING OR 371 (c) DATE	ART UNIT	FIL FEE REC'D	ATTY.DOCKET NO	DRAWINGS	TOT CLMS	IND CLMS
10/615,319	07/08/2003	2857	417	MYSKY-102J	13	4	4

CONFIRMATION NO. 9358

CORRECTED FILING RECEIPT

OC000000012511590

IANDIORIO & TESKA
INTELLECTUAL PROPERTY LAW ATTORNEYS
260 BEAR HILL ROAD
WALTHAM, WA 02451-1018

Date Mailed: 05/03/2004

Receipt is acknowledged of this regular Patent Application. It will be considered in its order and you will be notified as to the results of the examination. Be sure to provide the U.S. APPLICATION NUMBER, FILING DATE, NAME OF APPLICANT, and TITLE OF INVENTION when inquiring about this application. Fees transmitted by check or draft are subject to collection. Please verify the accuracy of the data presented on this receipt. **If an error is noted on this Filing Receipt, please write to the Office of Initial Patent Examination's Filing Receipt Corrections, facsimile number 703-746-9195. Please provide a copy of this Filing Receipt with the changes noted thereon. If you received a "Notice to File Missing Parts" for this application, please submit any corrections to this Filing Receipt with your reply to the Notice. When the USPTO processes the reply to the Notice, the USPTO will generate another Filing Receipt incorporating the requested corrections (if appropriate).**

Applicant(s)

Bruce Schwoegler, Wayland, MA;

Domestic Priority data as claimed by applicant

This application is a DIV of 09/752,347 12/29/2000 PAT 6,590,529
which claims benefit of 60/182,352 02/14/2000

Foreign Applications

If Required, Foreign Filing License Granted: 10/06/2003

Projected Publication Date: Not Applicable

Non-Publication Request: No

Early Publication Request: No

**** SMALL ENTITY ****

Title

Individualized, location specific weather forecasting system

Preliminary Class

LICENSE FOR FOREIGN FILING UNDER
Title 35, United States Code, Section 184
Title 37, Code of Federal Regulations, 5.11 & 5.15

GRANTED

The applicant has been granted a license under 35 U.S.C. 184, if the phrase "IF REQUIRED, FOREIGN FILING LICENSE GRANTED" followed by a date appears on this form. Such licenses are issued in all applications where the conditions for issuance of a license have been met, regardless of whether or not a license may be required as set forth in 37 CFR 5.15. The scope and limitations of this license are set forth in 37 CFR 5.15(a) unless an earlier license has been issued under 37 CFR 5.15(b). The license is subject to revocation upon written notification. The date indicated is the effective date of the license, unless an earlier license of similar scope has been granted under 37 CFR 5.13 or 5.14.

This license is to be retained by the licensee and may be used at any time on or after the effective date thereof unless it is revoked. This license is automatically transferred to any related applications(s) filed under 37 CFR 1.53(d). This license is not retroactive.

The grant of a license does not in any way lessen the responsibility of a licensee for the security of the subject matter as imposed by any Government contract or the provisions of existing laws relating to espionage and the national security or the export of technical data. Licensees should apprise themselves of current regulations especially with respect to certain countries, of other agencies, particularly the Office of Defense Trade Controls, Department of State (with respect to Arms, Munitions and Implements of War (22 CFR 121-128)); the Office of Export Administration, Department of Commerce (15 CFR 370.10 (j)); the Office of Foreign Assets Control, Department of Treasury (31 CFR Parts 500+) and the Department of Energy.

NOT GRANTED

No license under 35 U.S.C. 184 has been granted at this time, if the phrase "IF REQUIRED, FOREIGN FILING LICENSE GRANTED" DOES NOT appear on this form. Applicant may still petition for a license under 37 CFR 5.12, if a license is desired before the expiration of 6 months from the filing date of the application. If 6 months has lapsed from the filing date of this application and the licensee has not received any indication of a secrecy order under 35 U.S.C. 181, the licensee may foreign file the application pursuant to 37 CFR 5.15(b).

UNITED STATES PATENT AND TRADEMARK OFFICE

COMMISSIONER FOR PATENTS
UNITED STATES PATENT AND TRADEMARK OFFICE
P.O. BOX 1450
ALEXANDRIA, VA 22313-1450
www.uspto.gov

SAMUEL A. KASSATLY LAW OFFICE
20690 VIEW OAKS WAY
SAN JOSE CA 95120

COPY MAILED

MAR 28 2007

OFFICE OF PETITIONS

Applicant: Kollmann et al.
Appl. No.: 10/615,323
Filing Date: July 7, 2003
Title: SYSTEM AND METHOD FOR AUTOMATICALLY COLLECTING TRACE DETAIL AND HISTORY DATA
Attorney Docket No.: CA920030064US1
Pub. No.: US 2004/0268314 A1
Pub. Date: December 30, 2004

This is a decision on the request for a corrected patent application publication under 37 CFR 1.221(b), received on November 11, 2006, for the above-identified application

The request is DISMISSED.

Applicant requests that the application be republished because the patent application publication contains a material error, as the publication includes the specification, claims, drawings and abstract of another application.

37 CFR 1.221 (b) is applicable "only when the Office makes a material mistake which is apparent from Office records." A material mistake must affect the public's ability to appreciate the technical disclosure of the patent application publication, to determine the scope of the patent application publication, or to determine the scope of the provisional rights that an applicant may seek to enforce upon issuance of a patent. [1]

The request is dismissed, as the paper was not signed in compliance with 37 CFR 1.4(d)2(i).

The applicant is advised that a "request for republication of an application previously published" may be filed under 37 CFR 1.221(a). Such a request for republication "must include a copy of the application compliance with the Office's electronic filing system requirements and be accompanied by the publication fee set forth in § 1.18 (d) and the processing fee set forth in § 1.17 (i)." If the request for republication does not comply with the electronic filing system requirements, the republication will not take place and the publication fee set forth in § 1.18 (d) will be refunded. The processing fee will be retained.

[1] Changes to Implement Eighteen-Month Publication of Patent Applications, 65 FR 57023, 57038 (Sept. 20, 2000), 1239, Off. Gaz. Pat. Office Notices 63, 75 (Oct. 10, 2000) (final rule).

Any request for republication under 37 CFR 1.221(a), must be submitted via the EFS system and questions or request for reconsideration of the decision, should be addressed as follows:

By mail to: Mail Stop PGPUB
Commissioner for Patents
P.O. Box 1450
Alexandria, Va. 22313-1450

By facsimile: 571-273-8300

Inquiries relating to this matter may be directed to Mark Polutta at (571) 272-7709 (voice).

Mark Polutta
Legal Advisor
Office of Patent Legal Administration
Office of the Deputy Commissioner
for Patent Examination Policy

UNITED STATES PATENT AND TRADEMARK OFFICE

Commissioner for Patents
United States Patent and Trademark Office
P.O. Box 1450
Alexandria, VA 22313-1450
www.uspto.gov

HARNESS, DICKEY & PIERCE, P.L.C.
P.O. BOX 828
BLOOMFIELD HILLS, MI 48303

COPY MAILED

MAY 2 6 2005

OFFICE OF PETITIONS

In re Application of
Dae Young Lee, et al.
Application No. 10/615,327
Filed: July 8, 2003
Attorney Docket No. 9242-000029

ON PETITION

This is a decision on the petition, filed February 24, 2005, to revive the above-identified application under the provisions of 37 CFR 1.137(b).

The above-identified application became abandoned for failure to reply in a timely manner to the non-final Office action mailed August 26, 2004, which set a shortened statutory period for reply of one (1) month or thirty (30) days (whichever is later). No extension of time under the provisions of 37 CFR 1.136(a) was obtained. This decision precedes the mailing of a Notice of Abandonment.

The petition is found to comply with the requirements of 37 CFR 1.137(b). Accordingly, the petition is **GRANTED**.

It is noted that petitioner submitted an extension of time with the present petition. Extensions of time under 37 CFR 1.136 are available only if asked for prior to or with the response. In no case, however, may an applicant respond later than the maximum time period set by statute. Accordingly, if the question of abandonment arises when the provisions of 37 CFR 1.136 can no longer be used, then the application is abandoned when the unextended time for response has expired. Since, no extension of time fees are due on a petition for revival, the $1080 extension fees submitted with the present petition are being credited to counsel's deposit account.

Telephone inquiries concerning this decision may be directed to the undersigned at (571) 272-3204. All other inquiries regarding this application should be directed to the Technology Center.

The application file is being forwarded to Technology Center AU 1762 for consideration of the response filed January 24, 2005.

Sherry D. Brinkley
Petitions Examiner
Office of Petitions
Office of the Deputy Commissioner
for Patent Examination Policy

OIPE
FEB 2 4 2005
PATENT & TRADEMARK OFFICE

PTO/SB/22 (06-04)
Approved for use through 7/31/2006. OMB 0651-0031
U.S. Patent and Trademark Office; U.S. DEPARTMENT OF COMMERCE
Under the Paperwork Reduction Act of 1995, no persons are required to respond to a collection of information unless it displays a valid OMB control number.

PETITION FOR EXTENSION OF TIME UNDER 37 CFR 1.136(a)	Docket Number (Optional) 9242-000029
Application Number 10/615,327	Filed July 8, 2003
For Surface Treatment Method for Improving The Surface Wettability of Wet Surface Heat Exchangers	
Art Unit 1762	Examiner Jennifer Kolb Michener

This is a request under the provisions of 37 CFR 1.136(a) to extend the period for filing a reply in the above identified application.

The requested extension and fee are as follows (check time period desired and enter the appropriate fee below):

	Fee	Small Entity Fee	
☐ One month (37 CFR 1.17(a)(1))	$120	$60	$____
☐ Two months (37 CFR 1.17(a)(2))	$450	$225	$____
☐ Three months (37 CFR 1.17(a)(3))	$1020	$510	$____
☐ Four months (37 CFR 1.17(a)(4))	$1590	$795	$____
☒ Five months (37 CFR 1.17(a)(5))	$2160	$1080	$1,080

☒ Applicant claims small entity status. See 37 CFR 1.27.

☒ A check in the amount of the fee is enclosed.

☐ Payment by credit card. Form PTO-2038 is attached.

☐ The Director has already been authorized to charge fees in this application to a Deposit Account.

☒ The Director is hereby authorized to charge any fees which may be required, or credit any overpayment, to Deposit Account Number 08-0750 . I have enclosed a duplicate copy of this sheet.

WARNING: Information on this form may become public. Credit card information should not be included on this form. Provide credit card information and authorization on PTO-2038.

I am the
☐ applicant/inventor.
☐ assignee of record of the entire interest. See 37 CFR 3.71
Statement under 37 CFR 3.73(b) is enclosed. (Form PTO/SB/96).
☒ attorney or agent of record. Registration Number 28,764
☐ attorney or agent under 37 CFR 1.34(a).
Registration number if acting under 37 CFR 1.34(a). _____ .

Signature	February 24, 2005 Date
Gregory A. Stobbs Typed or printed name	(248) 641-1600 Telephone Number

NOTE: Signatures of all the inventors or assignees of record of the entire interest or their representative(s) are required. Submit multiple forms if more than one signature is required, see below.

☒ Total of 1 forms are submitted.

This collection of information is required by 37 CFR 1.136(a). The information is required to obtain or retain a benefit by the public which is to file (and by the USPTO to process) an application. Confidentiality is governed by 35 U.S.C. 122 and 37 CFR 1.14. This collection is estimated to take 6 minutes to complete, including gathering, preparing, and submitting the completed application form to the USPTO. Time will vary depending upon the individual case. Any comments on the amount of time you require to complete this form and/or suggestions for reducing this burden, should be sent to the Chief Information Officer, U.S. Patent and Trademark Office, U.S. Department of Commerce, P.O. Box 1450, Alexandria, VA 22313-1450. DO NOT SEND FEES OR COMPLETED FORMS TO THIS ADDRESS. SEND TO: Commissioner for Patents, P.O. Box 1450, Alexandria, VA 22313-1450.
If you need assistance in completing the form, call 1-800-PTO-9199 and select option 2.

02/28/2005 CNGUYEN 00000069 10615327
01 FC:2255 1080.00 OP

UNITED STATES PATENT AND TRADEMARK OFFICE

Commissioner for Patents
United States Patent and Trademark Office
P.O. Box 1450
Alexandria, VA 22313-1450
www.uspto.gov

ROBERT A. HULSE
FENWICK & WEST LLP
SILICON VALLEY CENTER
801 CALIFORNIA STREET
MOUNTAIN VIEW CA 94041

COPY MAILED
APR 19 2006
OFFICE OF PETITIONS

In re Application of	:	
MODER et al.	:	
Application No. 10/615,337	:	DECISION ON PETITION
Filed: July 7, 2003	:	TO WITHDRAW
Attorney Docket No. 23564-07876	:	FROM RECORD
	:	

This is a decision on the Request to Withdraw as attorney or agent of record under 37 C.F.R. § 1.36(b), filed April 25, 2005.

The request is **NOT APPROVED** as moot.

A review of the file record indicates that the power of attorney to Robert A. Hulse and all practitioners of record has been revoked by the assignee of the patent application. Accordingly, the request to withdraw under 37 C.F.R. § 1.36(b) is moot.

All future communications from the Office will continue to be directed to the below-listed address until otherwise notified by applicant.

Telephone inquires concerning this decision should be directed to the undersigned at 571-272-4787.

Denise Pothier
Petitions Examiner
Office of Petitions

cc: MORRISON & FOERSTER LLP
755 PAGE MILL RD
PALO ALTO CA 94304-1018

UNITED STATES PATENT AND TRADEMARK OFFICE

Commissioner for Patents
United States Patent and Trademark Office
P.O. Box 1450
Alexandria, VA 22313-1450
www.uspto.gov

MARK A. LITMAN & ASSOCIATES, P.A.
YORK BUSINESS CENTER
SUITE 205
3209 W. 76TH ST.
EDINA, MN 55435

COPY MAILED

NOV 05 2004

OFFICE OF PETITIONS

In re Application of
John G. Breeding et al
Application No. 10/615,350
Filed: July 8, 2003
Attorney Docket No. PA0894.AP.US

DECISION ON PETITION
UNDER 37 CFR 1.78(a)(3)

This is a decision on the petition under 37 CFR 1.78(a)(3), filed July 19, 2004, to accept an unintentionally delayed claim under 35 U.S.C. § 120 for the benefit of priority to the prior-filed nonprovisional applications set forth in the concurrently filed amendment.

The petition is **GRANTED**.

A petition for acceptance of a claim for late priority under 37 CFR 1.78(a)(3) is only applicable to those applications filed on or after November 29, 2000. Further, the petition is appropriate only after the expiration of the period specified in 37 CFR 1.78(a)(2)(ii). In addition, the petition under 37 CFR 1.78(a)(3) must be accompanied by:

(1) the reference required by 35 U.S.C. § 120 and 37 CFR 1.78(a)(2)(i) of the prior-filed application, unless previously submitted;
(2) the surcharge set forth in § 1.17(t); and
(3) a statement that the entire delay between the date the claim was due under 37 CFR 1.78(a)(2)(ii) and the date the claim was filed was unintentional. The Commissioner may require additional information where there is a question whether the delay was unintentional.

The instant pending application was filed on July 8, 2003, and was pending at the time of filing of the instant petition. A reference to the prior-filed nonprovisional applications has been included in an amendment to the first sentence of the specification following the title as required by 37 CFR 1.78(a)(2)(iii).

The instant nonprovisional application was filed after November 29, 2000, and the claim herein for the benefit of priority to the prior-filed nonprovisional applications is submitted after expiration of the period specified in 37 CFR 1.78(a)(2)(ii). Also, the reference to the prior-filed nonprovisional applications was submitted during the pendency of the instant nonprovisional application, for which the claim for benefit of priority is sought. *See* 35 U.S.C. § 120. Accordingly, having found that the instant petition for acceptance of an unintentionally delayed claim for the benefit of priority under 35 U.S.C. § 120 to the prior-filed nonprovisional applications satisfies the conditions of 37 CFR 1.78(a)(3), the petition is granted.

The granting of the petition to accept the delayed benefit claim to the prior-filed applications under 37 CFR 1.78(a)(3) should not be construed as meaning that the instant application is entitled to the benefit of the prior-filed applications. In order for the instant application to be entitled to the benefit of the prior-filed applications, all other requirements under 35 U.S.C. § 120 and 37 CFR 1.78(a)(1) and (a)(2) must be met. Similarly, the fact that the corrected Filing Receipt accompanying this decision on petition includes the prior-filed applications should not be construed as meaning that applicant is entitled to the claim for benefit of priority to the prior-filed applications noted thereon. Accordingly, the examiner will, in due course, consider this benefit claim and determine whether the instant application is entitled to the benefit of the earlier filing date.

A corrected Filing Receipt, which includes the priority claim to the prior-filed nonprovisional applications, accompanies this decision on petition.

Any inquiries concerning this decision may be directed to Irvin Dingle at (571) 272-3210.

This matter is being forwarded to Technology Center Art Unit 3712 for appropriate action on the amendment filed July 19, 2004, including consideration by the examiner of applicant's entitlement to claim benefit of priority under 35 U.S.C. § 120 to the prior-filed nonprovisional applications.

Karen Creasy

Karen Creasy
Petitions Examiner
Office of Petitions
Office of the Deputy Commissioner
for Patent Examination Policy

Attachment: Corrected Filing Receipt

UNITED STATES PATENT AND TRADEMARK OFFICE

Commissioner for Patents
United States Patent and Trademark Office
P.O. Box 1450
Alexandria, VA 22313-1450
www.uspto.gov

KRATZ, QUINTOS & HANSON, LLP
1420 K Street, N.W.
Suite 400
WASHINGTON DC 20005

COPY MAILED

JUL 3 1 2008

OFFICE OF PETITIONS

In re Patent No. 7,270,714	:	
Issue Date: September 18, 2007	:	
Application No. 10/615,381	:	ON PETITION
Filed: July 9, 2003	:	
Attorney Docket No. 000593B	:	

This is a decision on the petition filed October 2, 2007, which is being treated as a request under 37 CFR 3.81(b)[1] to correct the name of an assignee on the front page of the above-identified patent by way of a Certificate of Correction.

The request is **GRANTED**.

Telephone inquiries concerning this decision may be directed to Carl Friedman at (571) 272-6842. Inquiries regarding the issuance of a certificate of correction should be directed to the Certificate of Correction Branch at (571) 272-4200.

The Certificates of Correction Branch will be notified of this decision granting the petition under 37 CFR 3.81(b) and directing issuance of the requested Certificate of Correction.

Carl Friedman
Petitions Examiner
Office of Petitions

---

[1] *See* MPEP 1309, subsection II; and Official Gazette of June 22, 2004.

UNITED STATES PATENT AND TRADEMARK OFFICE

Commissioner for Patents
United States Patent and Trademark Office
P.O. Box 1450
Alexandria, VA 22313-1450
www.uspto.gov

COPY MAILED

SEP 01 2006

OFFICE OF PETITIONS

ROYLANCE ABRAMS BERDO & GOODMAN LLP
1300 19TH STREET NW
SUITE 600
WASHINGTON, DC 20036

In re Application of	:	
Abby, et al.	:	
Application No. 10/615,393	:	ON PETITION
Filed: July 9, 2003	:	
Attorney Docket No. 45268	:	

This is a decision on the petition to withdraw the holding of abandonment under 37 CFR 1.181, filed January 24, 2006.

The petition is **GRANTED**.

This application was held abandoned for failure to timely respond to the Office action mailed August 25, 2005. This Office action set a shortened statutory period for reply of one (1) month. According to the Office action, extensions of time were available; however, in no event could a reply be filed later than six months from the mailing date of the Office action. The Office prematurely mailed a Notice of Abandonment on December 28, 2005.

With the instant petition, Applicant has filed a reply to the August 25, 2005 Office action, made timely by obtaining a four month extension of time.

In view thereof, **THE HOLDING OF ABANDONMENT IS WITHDRAWN.**

The Notice of Abandonment is **VACATED.**

Given the basis for granting this petition, no petition fee was required, and none has been charged.

The matter is being forwarded to Group Art Unit 3634 for consideration of the Response to Restriction Requirement, filed January 24, 2006 (made timely by obtaining a four month extension of time).

Telephone inquiries regarding this decision should be directed to the undersigned at (571)272-3207.

Cliff Congo
Petitions Attorney
Office of Petitions

UNITED STATES PATENT AND TRADEMARK OFFICE

Commissioner for Patents
United States Patent and Trademark Office
P.O. Box 1450
Alexandria, VA 22313-1450
www.uspto.gov

ROYLANCE, ABRAMS, BERDO & GOODMAN, L.L.P.
1300 19TH STREET, N.W.
SUITE 600
WASHINGTON, DC 20036

COPY MAILED

MAY 3 1 2006

OFFICE OF PETITIONS

In re Application of Richards et al.	:	Decision on Petition
Application No. 10/615,401	:	
Filing Date: July 9, 2003	:	
Attorney Docket No. 45269	:	

This is a decision on the petition under 37 CFR 1.137(b), filed March 31, 2006, to revive the above-identified application.

The petition is **granted**.

A final Office Action was mailed on September 22, 2005. Replies to the Office action were filed on November 22, 2005, and February 22, 2006. Neither reply prima facie placed the application in condition for allowance. Since a two-month extension of time was obtained, the application became abandoned February 23, 2006.

The instant petition requests revival of the application.

Petitioner has met the requirements to revive the above-identified application pursuant to 37 CFR 1.137(b). Therefore, the petition is granted and the application is revived.

Technology Center Art Unit 3634 will be informed of the instant decision and the application will be further examined in due course.

Telephone inquiries regarding this communication should be directed to Petitions Attorney Steven Brantley at (571) 272-3203.

Charles Steven Brantley
Senior Petitions Attorney
Office of Petitions

UNITED STATES PATENT AND TRADEMARK OFFICE

UNDER SECRETARY OF COMMERCE FOR INTELLECTUAL PROPERTY AND
DIRECTOR OF THE UNITED STATES PATENT AND TRADEMARK OFFICE
WASHINGTON, DC 20231
www.uspto.gov

James Remenick
POWELL GOLDSTEIN LLP
Intellectual Property Group
901 New York Avenue, N.W. Third Floor
Washington, DC 20001-4413

MAILED
FROM DIRECTORS OFFICE
JUN 15 2005
TECHNOLOGY CENTER 3600

In re application of
Phillip M. Santisi
Application No. 10/615,407 :
Filed: July 09, 2003 :
For: FASTENING DEVICE :

DECISION ON REQUEST FOR WITHDRAWAL OF ATTORNEY

This is a decision on the request filed on January 27, 2005, under 37 CFR 1.36 and MPEP 402.06, requesting permission to withdraw as the attorney of record in the above-identified application.

The request is **NOT APPROVED**.

Under 37 CFR 1.36 an attorney may withdraw only upon application to and approval by the Commissioner. It should be noted that a withdrawal is effective when approved, not when filed. Besides giving due notice to his or her client and delivering to the client all papers and property to which the client is entitled as specified under 37 CFR 10.40, approval of such a request requires that the following conditions be met:

A) Each attorney of record must sign the notice of withdrawal, or the notice must contain a clear indication of one attorney signing on behalf of another, because the Office does not recognize law firms;

B) A proper reason for the withdrawal as enumerated in 37 CFR 10.40(b) or subsection (1)-(6) of 37 CFR 10.40(c) must be provided; and

C) If withdrawal is requested in accordance with 37 CFR 10.40(c) above, there must be at least 30 days between approval of the withdrawal and the later of the expiration date of a time period for reply or the expiration date of the period which can be obtained by a petition and fee for extension of time under 37 CFR 1.136(a).

The request to withdraw as attorney in the above-identified application is not approved because the request does not comply with Item B). While a reason may be provided by referencing a **specific** portion of 37 CFR 10.40, simply reciting that the reason is that "Application is being transferred to another agency" is insufficient. A more specific reason or referencing a specific portion of 37 CFR 10.40(c), is required for approval. It is noted that a paper was filed on February 04, 2005 requesting the office to disregard the Request to Withdraw as Attorney filed January 27, 2005. In as much as there are no provisions to disregard papers filed, the request to disregard is denied.

Kenneth J. Dorner
Special Programs Examiner
Patent Technology Center 3600
(571) 272-6587
Facsimile No.: (703) 872-9306

KJD/slb: 05/26/05

UNITED STATES PATENT AND TRADEMARK OFFICE

Commissioner for Patents
United States Patent and Trademark Office
P.O. Box 1450
Alexandria, VA 22313-1450
www.uspto.gov

James Remenick
Powell Goldstein LLP
901 New York Ave, N.W.
Third Floor
Washington DC 20001-4413

COPY MAILED

MAR 2 0 2006

OFFICE OF PETITIONS

ON PETITION

In re Application of	:	
Santisi	:	
Application No. 10/615,407	:	
Filed: July 9, 2003	:	
Attorney Docket No. 144010.00100	:	

This is a decision on the petition to withdraw the holding of abandonment under 37 CFR 1.181 filed on November 15, 2005.

The petition to withdraw the holding of abandonment is **Dismissed**.

Any request for reconsideration should be filed within **TWO MONTHS** of the mailing date of this decision in order to be considered timely. 37 CFR 1.181(f). This time period may not be extended pursuant to 37 CFR 1.136.

This above-identified application was held abandoned for failure to timely reply to the restriction requirement mailed July 12, 2004. The Restriction Requirement set a one (1) month shortened statutory period for reply. No extensions of time were obtained under the provisions of 37 CFR 1.136(a). Accordingly, this application was held abandoned on August 13, 2004. A Notice of Abandonment was mailed on February 18, 2005.

Petitioner asserts that a reply to the restriction requirement was submitted on August 12, 2004. Petitioner states he has supplied a copy of the reply and a post card receipt. However a review of the record shows the Office has not received a copy of the reply or the post card receipt.

On renewed petition, evidence in support of the petition should be provided.

Further correspondence with respect to this matter should be addressed as follows:

By mail: Mail Stop Petition
Commissioner for Patents
P.O. Box 1450
Alexandria, VA 22313-1450

By facsimile: (571) 273-8300

By delivery service:
(FedEx, UPS, DHL, etc.)

U.S. Patent and Trademark Office
Customer Service Window,
Randolph Building
401 Dulany Street
Alexandria, VA 22314

Telephone inquiries concerning this matter should be directed to the undersigned at (571) 272-3215.

Charlema R. Grant

Charlema R. Grant
Petitions Attorney
Office of Petitions

UNITED STATES PATENT AND TRADEMARK OFFICE

Commissioner for Patents
United States Patent and Trademark Office
P.O. Box 1450
Alexandria, VA 22313-1450
www.uspto.gov

James Remenick
Novak, Druce & Quigg LLP
1300 Eye Street, N.W.
Suite 400 East Tower
Washington DC 20005

COPY MAILED
JUL 17 2006
OFFICE OF PETITIONS

In re Application of :
Santisi :
Application No. 10/615,407 : ON PETITION
Filed: July 9, 2003 :
Attorney Docket No. 8106.002.US :

This is a decision on the renewed petition to withdraw the holding of abandonment under 37 CFR 1.181 filed on June 12, 2005.

The petition to withdraw the holding of abandonment is **GRANTED**

This above-identified application was held abandoned for failure to timely reply to the restriction requirement mailed July 12, 2004. The Restriction Requirement set a one (1) month shortened statutory period for reply. No extensions of time were obtained under the provisions of 37 CFR 1.136(a). Accordingly, this application was held abandoned on August 13, 2004. A Notice of Abandonment was mailed on February 18, 2005. A petition under 37 CFR 1.181 was dismissed on March 20, 2006.

Petitioner asserts that a reply to the restriction requirement was submitted on August 12, 2004. As evidence, petitioner has submitted a copy of a return postcard date stamped by the Office acknowledging receipt of the reply. Additionally, petitioner has supplied a copy of the previously mailed correspondence.

The Notice of Abandonment is hereby vacated and the holding of abandonment is withdrawn.

This application is being forwarded to Art Unit 3677 for further processing of the reply to the restriction requirement.

The change of correspondence address has been entered and made of record

Telephone inquiries concerning this matter should be directed to the undersigned at (571) 272-3215.

Charlema R. Grant
Petitions Attorney
Office of Petitions

UNITED STATES PATENT AND TRADEMARK OFFICE

COMMISSIONER FOR PATENTS
UNITED STATES PATENT AND TRADEMARK OFFICE
P.O. BOX 1450
ALEXANDRIA, VA 22313-1450
www.uspto.gov
DIW Oct-06

IBM CORPORATION
IPLAW IQ0A/40-3
1701 NORTH STREET
ENDICOTT NY 13760

COPY MAILED
OCT 1 1 2006
OFFICE OF PETITIONS

In re Patent No. 6,896,179	:	
Issued: 24 May, 2005	:	
Application No. 10/615,437	:	ON PETITION
Filed: 8 July, 2003	:	
Atty Dckt No. JP920020126US1	:	

This is a decision on the petition filed on 4 April, 2006, which is being treated as a request under 37 CFR 3.81(b)[1] to correct the assignee on the front page of the above-identified patent by way of a Certificate of Correction.

The petition is **granted**.

Telephone inquires concerning this matter may be directed to the undersigned at 571.272.3231. Any questions concerning the issuance of the Certificate of Correction should be directed to the Certificates of Correction Branch at 703.305.8309.

It is noted that petitioner submitted $400.00 with the present petition. However, only a processing fee of $130.00 and certificate of correction fee of $100.00 are due. The balance will be credited to counsel's deposit account.

The file is being forwarded to the Certificates of Correction Branch for issuance of the requested Certificate of Correction.

DWood

Douglas I. Wood
Senior Petitions Attorney
Office of Petitions

[1] See Official Gazette of 22 June, 2004.

UNITED STATES PATENT AND TRADEMARK OFFICE

Commissioner for Patents
United States Patent and Trademark Office
P.O. Box 1450
Alexandria, VA 22313-1450
www.uspto.gov

COPY MAILED

APR 12 2007

OFFICE OF PETITIONS

JENNIFER L. SKORD
MOORE & VAN ALLEN
430 DAVIS DRIVE, SUITE 500
DURHAM, NC 27560-6832

In re Application of	:	
Colin Regan et al	:	
Application No. 10/615,451	:	ON PETITION
Filed: July 8, 2003	:	
Attorney Docket No. 012861-000021	:	

This is a decision on the petition, filed November 20, 2006 under 37 CFR 1.137(b) to revive the above-identified application.

The petition is **DISMISSED.**

Any request for reconsideration of this decision must be submitted within TWO (2) MONTHS from the mail date of this decision. Extensions of time under 37 CFR 1.136(a) are permitted. The reconsideration request should include a cover letter entitled "**Renewed Petition under 37 CFR 1.137(b)**." This is **not** final agency action within the meaning of 5 U.S.C. § 704.

The above-identified application became abandoned for failure to reply in a timely manner to the non-final Office action mailed December 20, 2005, which set a shortened statutory period for reply of three (3) months. No extensions of time under the provisions of 37 CFR 1.136(a) were obtained. Accordingly, the above-identified application became abandoned on March 21, 2006.

An extension of time under 37 CFR 1.136 must be filed prior to the expiration of the maximum extendable period for reply. See In re Application of S., 8 USPQ2d 1630, 1631 (Comm'r Pats. 1988). Accordingly, since the $510 extension of time submitted with the petition on November 20, 2006 was subsequent to the maximum extendable period for reply, petitioner may request a refund of this fee by writing to Mail Stop 16, Refund Section. A copy of this decision should accompany petitioner's request.

A grantable petition under 37 CFR 1.137(b) must be accompanied by: (1) the required reply, unless previously filed; (2) the petition fee as set forth in 37 CFR 1.17(m); (3) a statement that the entire delay in filing the required reply from the due date for the reply until the filing of a grantable petition pursuant to 37 CFR 1.137(b) was unintentional; and (4) any terminal disclaimer (and fee as set forth in 37 CFR 1.20(d)) required by 37 CFR 1.137(c). Where there is a question as to whether either the abandonment or the delay in filing a petition under 37 CFR 1.137 was unintentional, the Commissioner may require additional information. See MPEP 711.03(c)(III)(C) and (D). The instant petition lack(s) item(s) (1).

The petition submitted on November 20, 2006 was signed by one applicant, Colin Regan. **Communications received at the USPTO must be signed by all of the applicants. 37** CFR 1.33(b) states:

> "Amendments and other papers filed in the application must be signed by: (1) An attorney or agent of record appointed in compliance with § 1.34(b); (2) A registered attorney or agent not of record who acts in a representative capacity under the provisions of § 1.34(a); (3) The assignee of record of the entire interest, if there is an assignee of record of the entire interest; (4) An assignee of record of an undivided part interest, and any assignee(s) of the remaining interest and any applicant retaining an interest, if there is an assignee of record of an undivided part interest; or (5) All of the applicants (§§ 1.42. 1.43 and 1.47) for patent, unless there is an assignee of record of the entire interest and such assignee has taken action in the application in accordance with §§ 3.71 and 3.73."

Further correspondence with respect to this matter should be addressed as follows:

By mail: Mail Stop PETITION
Commissioner for Patents
Post Office Box 1450
Alexandria, VA 22313-1450

By hand: Customer Service Window
Randolph Building
401 Dulany Street
Alexandria, VA 22314

By facsimile: (571) 273-8300
ATTN: Office of Petitions

Telephone inquiries concerning this decision should be directed to the undersigned at (571) 272-3210.

Irvin Dingle
Petitions Examiner
Office of Petitions

cc: Colin Regan, CEO
Eco Hydro Energy Ltd.
Nelson Square Business Building
#2304 – 808 Nelson Street
Vancouver, BC V6G 2G2
CANADA

UNITED STATES PATENT AND TRADEMARK OFFICE

Commissioner for Patents
United States Patent and Trademark Office
P.O. Box 1450
Alexandria, VA 22313-1450
www.uspto.gov

JENNIFER L. SKORD
MOORE & VAN ALLEN
430 DAVIS DRIVE, SUITE 500
DURHAM, NC 27560-6832

COPY MAILED

JUL 12 2007

OFFICE OF PETITIONS

In re Application of	:	
Colin Regan et al	:	
Application No. 10/615,451	:	ON PETITION
Filed: July 8, 2003	:	
Attorney Docket No. 012861-000021	:	

This is a decision on the renewed petition, filed May 29, 2007 under 37 CFR 1.137(b) to revive the above-identified application.

The petition is **GRANTED.**

The file does not indicate a change of address has been submitted, although the address given on the petition differs from the address of record. If appropriate, a change of address should be filed in accordance with MPEP 601.03. A courtesy copy of this decision is being mailed to the address given on the petition; however, the Office will mail all future correspondence solely to the address of record.

Telephone inquiries concerning this decision should be directed to the undersigned at (571) 272-3210.

This matter is being referred to Technology Center AU 3745 for further processing.

Irvin Dingle
Petitions Examiner
Office of Petitions

cc: Colin Regan, CEO
Eco Hydro Energy Ltd.
Nelson Square Business Building
#2304 – 808 Nelson Street
Vancouver, BC V6G 2G2
CANADA

UNITED STATES PATENT AND TRADEMARK OFFICE

COMMISSIONER FOR PATENTS
UNITED STATES PATENT AND TRADEMARK OFFICE
P.O. BOX 1450
ALEXANDRIA, VA 22313-1450
www.uspto.gov

MAILED

JAN 21 2004

Office of the Director
Group 3600

Donald D. Mon
Suite 303
750 East Green Street
Pasadena, CA 91101

In re application of
William Calfas, et al.
Application No. 10/615,462
Filed: July 7, 2003
For: CARRIER FOR A PHYSICALLY CHALLENGED PERSON

DECISION ON PETITION TO MAKE SPECIAL (APPLICANT'S AGE)

This is a decision on the petition submitted on July 7, 2003 under 37 CFR 1.102 (c) to make the above-identified application special under the accelerated examination procedure set forth in MPEP 708.02, Section IV: Applicant's Age. The delay in deciding this petition is sincerely regretted.

The petition is **GRANTED**.

An application may be accorded special status upon the filing of a petition providing evidence showing that the applicant is at least 65 years old. Such a showing may be provided by evidence such as a birth certificate or a statement from the applicant.

The evidence submitted with the petition is a declaration from the applicant stating that he is 72 years of age.

The examiner is directed (1) to make an interference search for possible interfering applications, (2) to promptly examine this application out of turn, and (3) if any interfering application is discovered, to examine such application simultaneously and state in the first official letter of such application that it is being taken out of turn because of a possible interference.

Petitioner is advised that this application will continue to be special, throughout its entire prosecution and pendency, including interference or appeal, if any, only if petitioner makes a prompt ***bona fide*** effort, in response to each Office action, to place the application in condition for allowance, even if it is necessary to conduct an interview with the examiner to accomplish this purpose.

SUMMARY: Petition to Make Special **GRANTED**.

Steven N. Meyers
Special Programs Examiner
Technology Center 3600
(703) 308-3868

SNM/cps 1/15/04

UNITED STATES PATENT AND TRADEMARK OFFICE

Commissioner for Patents
United States Patent and Trademark Office
P.O. Box 1450
Alexandria, VA 22313-1450
www.uspto.gov
DIW 08-04

AGILENT TECHNOLOGIES, INC.
LEGAL DEPARTMENT, DL429
INTELLECTUAL PROPERTY ADMINISTRATION
P.O. BOX 7599
LOVELAND CO 80537-0599

COPY MAILED

AUG 2 7 2004

OFFICE OF PETITIONS

In re Application of	:	
Dove et al.	:	
Application No. 10/615,472	:	ON PETITION
Filed: 7 July, 2003	:	
Attorney Docket No. 10020072-5	:	

This is a decision on the petition under 37 CFR 1.182, filed on 19 July, 2004, to correct the names of the inventors in Office records.

The petition is **GRANTED**.

The inventorship has been corrected as follows:

1. Lewis R. Dove, Monument, CO

2. Marvin G. Wong, Woodland Park, CO

The change has been noted in the official file. A corrected filing receipt is attached.

It is noted that the declaration filed on 7 July, 2003 in the present application is missing the signature of joint inventor Dove. Nevertheless, since the application transmittal sheet filed in the present application on 7 July, 2003, states that the present application is a continuation of Application No. 10/176,025, and that a copy of the oath or declaration has been supplied from the parent application, a copy of the declaration from the parent application bearing the signature of both joint inventors has been placed in the file of the present application.

As the present petition was not due to an error on the part of petitioners, the petition fee of $130.00 will be credited to counsel's deposit account, No. 50-0178, as authorized in the present petition.

The application is being forwarded to the Publishing Division to await petitioners' response to the Notice of Allowance and Issue Fee Due.

Telephone inquiries concerning this matter may be directed to the undersigned at 703-308-6918.

D Wood

Douglas I. Wood
Senior Petitions Attorney
Office of Petitions

Encl: Corrected Filing Receipt