UNITED STATES PATENT AND TRADEMARK OFFICE

Commissioner for Patents
United States Patent and Trademark Office
P.O. Box 1450
Alexandria, VA 22313-1450
www.uspto.gov

LEVINE BAGADE HAN, LLP
2483 EAST BAYSHORE ROAD, SUITE 100
PALO ALTO, CA 94303

COPY MAILED

SEP 27 2007

OFFICE OF PETITIONS

In re Application of
Bryan Loomas, et. al.
Application No. 10/615,491
Filed: July 7, 2003
Attorney Docket No. BRONNE00600

DECISION ON PETITIONS
UNDER 37 CFR 1.78(a)(3) AND (a)(6)

This is a decision on the petition filed on September 29, 2006, which is being treated as a petition under 37 CFR §§ 1.78(a)(3) and 1.78(a)(6), to accept an unintentionally delayed claim under 35 U.S.C. §§120 and 119(e) for the benefit of the prior-filed applications set forth in the concurrently filed amendment. The delay in responding is regretted.

The petition is **DISMISSED**

A petition for acceptance of a claim for late priority under 37 CFR §§ 1.78(a)(3) and 1.78(a)(6) is only applicable to those applications filed on or after November 29, 2000 and after the expiration of the period specified in 37 CFR §§ 1.78(a)(2)(ii) and 1.78(a)(5)(ii). In addition, the petition under 37 CFR §§ 1.78(a)(3) and 1.78(a)(6) must be accompanied by:

(1) the reference required by 35 U.S.C. §§ 120 and 119(e) and 37 CFR §§ 1.78(a)(2)(i) and 1.78(a)(5)(i) of the prior-filed application, unless previously submitted;
(2) the surcharge set forth in § 1.17(t); and
(3) a statement that the entire delay between the date the claim was due under 37 CFR §§ 1.78(a)(2)(ii) and 1.78(a)(5)(ii) and the date the claim was filed was unintentional. The Director may require additional where there is a question whether the delay was unintentional.

The petition does not comply with item (1).

It is noted that application Nos. 11/357,639, 10/978,505 and 10/633,902 all have filing dates later than the application for which priority is being claimed. A priority claim must be to a prior-filed application and not to a later filed application. Therefore, the amendment filed on September 29, 2006 is not acceptable.

Before the petition under 37 CFR §§ 1.78(a)(3) and 1.78(a)(6) can be granted, a renewed petition and either an Application Data Sheet or an amendment (complying with the provisions of 37 CFR 1.121 and 37 CFR 1.76(b)(5)) to correct the above matters are required.

Further correspondence with respect to this matter should be addressed as follows:

By mail: Mail Stop PETITIONS
Commissioner for Patents
Post Office Box 1450
Alexandria, VA 22313-1450

By hand: Customer Service Window
Mail Stop Petitions
Randolph Building
401 Dulany Street
Alexandria, VA 22314

By fax: (571) 273-8300
ATTN: Office of Petitions

Any questions concerning this matter may be directed to Andrea Smith at (571) 272-3226.

Frances Hicks
Petitions Examiner
Office of Petitions

UNITED STATES PATENT AND TRADEMARK OFFICE

UNITED STATES DEPARTMENT OF COMMERCE
United States Patent and Trademark Office
Address: COMMISSIONER FOR PATENTS
P.O. Box 1450
Alexandria, Virginia 22313-1450
www.uspto.gov

SMYRSKI LAW GROUP, A PROFESSIONAL CORPORATION
3310 AIRPORT AVENUE, SW
SANTA MONICA, CA 90405

Mail Date: 04/21/2010

Applicant	: Yung-Ho Chuang	: DECISION ON REQUEST FOR
Patent Number	: 7639419	: RECALCULATION of PATENT
Issue Date	: 12/29/2009	: TERM ADJUSTMENT IN VIEW
Appliction No	: 10/615,512	: OF WYETH AND NOTICE OF INTENT TO
Filed	: 07/07/2003	: ISSUE CERTIFICATE OF CORRECTION
		:

The Request for Recalculation is **GRANTED** to the extent indicated.

The patent term adjustment has been determined to be **640** days. The USPTO will *sua sponte* issue a certificate of correction reflecting the amount of PTA days determined by the recalculation.

Prior to the issuance of the certificate of correction, the USPTO will afford patentee an opportunity to be heard and request reconsideration. Accordingly, patentee has **one month or thirty (30) days**, whichever is longer, to file a request for reconsideration of this patent term adjustment calculation. See 35 U.S.C. 154(b)(3)(B)(ii) and 37 CFR 1.322(a)(4). No extensions of time will be granted under 37 CFR 1.136.

Patentee should use document code PET.OP if electronically filing a request for reconsideration of this patent term adjustment calculation. The patentee must also include the information required by 37 CFR 1.705(b)(2) and the fee required by 37 CFR 1.18(e). If patentee does not file a timely request for reconsideration of this patent term adjustment calculation including the information required by 37 CFR 1.705(b)(2) and the fee required by 37 CFR 1.18(e), the USPTO will issue a certificate of correction reflecting the PTA determination noted above.

Patentee should be aware that in order to preserve the right to review in the United States District Court for the District of Columbia of the USPTO patent term adjustment determination, patentee must ensure that he or she also take the steps required under 35 U.S.C. 154(b)(4)(A) in a timely manner. Nothing in the request for recalculation should be construed as providing an alternative time frame for commencing a civil action under 35 U.S.C. 154(b)(4)(A).

Any questions concerning this decision should be directed to the Office of Patent Legal Administration at 571-272-7702.

UNITED STATES PATENT AND TRADEMARK OFFICE

UNITED STATES DEPARTMENT OF COMMERCE
United States Patent and Trademark Office
Address: COMMISSIONER FOR PATENTS
P.O. Box 1450
Alexandria, Virginia 22313-1450
www.uspto.gov

APPL NO.	FILING OR 371 (c) DATE	ART UNIT	FIL FEE REC'D	ATTY.DOCKET NO	DRAWINGS	TOT CLMS	IND CLMS
10/615,528	07/08/2003	3762	2820	5656-31	5	107	9

CONFIRMATION NO. 8193

CORRECTED FILING RECEIPT

OC000000013115475

20792
MYERS BIGEL SIBLEY & SAJOVEC
PO BOX 37428
RALEIGH, NC 27627

Date Mailed: 06/30/2004

Receipt is acknowledged of this regular Patent Application. It will be considered in its order and you will be notified as to the results of the examination. Be sure to provide the U.S. APPLICATION NUMBER, FILING DATE, NAME OF APPLICANT, and TITLE OF INVENTION when inquiring about this application. Fees transmitted by check or draft are subject to collection. Please verify the accuracy of the data presented on this receipt. **If an error is noted on this Filing Receipt, please write to the Office of Initial Patent Examination's Filing Receipt Corrections, facsimile number 703-746-9195. Please provide a copy of this Filing Receipt with the changes noted thereon. If you received a "Notice to File Missing Parts" for this application, please submit any corrections to this Filing Receipt with your reply to the Notice. When the USPTO processes the reply to the Notice, the USPTO will generate another Filing Receipt incorporating the requested corrections (if appropriate).**

Applicant(s)

Raymond E. Ideker, Birmingham, AL;

Domestic Priority data as claimed by applicant

Foreign Applications

If Required, Foreign Filing License Granted: 10/06/2003

Projected Publication Date: 01/13/2005

Non-Publication Request: No

Early Publication Request: No

Title

Methods, systems and computer program products for defibrillation by applying stimulus to a fastest activating region of a heart

Preliminary Class

607

LICENSE FOR FOREIGN FILING UNDER
Title 35, United States Code, Section 184
Title 37, Code of Federal Regulations, 5.11 & 5.15

GRANTED

The applicant has been granted a license under 35 U.S.C. 184, if the phrase "IF REQUIRED, FOREIGN FILING LICENSE GRANTED" followed by a date appears on this form. Such licenses are issued in all applications where the conditions for issuance of a license have been met, regardless of whether or not a license may be required as set forth in 37 CFR 5.15. The scope and limitations of this license are set forth in 37 CFR 5.15(a) unless an earlier license has been issued under 37 CFR 5.15(b). The license is subject to revocation upon written notification. The date indicated is the effective date of the license, unless an earlier license of similar scope has been granted under 37 CFR 5.13 or 5.14.

This license is to be retained by the licensee and may be used at any time on or after the effective date thereof unless it is revoked. This license is automatically transferred to any related applications(s) filed under 37 CFR 1.53(d). This license is not retroactive.

The grant of a license does not in any way lessen the responsibility of a licensee for the security of the subject matter as imposed by any Government contract or the provisions of existing laws relating to espionage and the national security or the export of technical data. Licensees should apprise themselves of current regulations especially with respect to certain countries, of other agencies, particularly the Office of Defense Trade Controls, Department of State (with respect to Arms, Munitions and Implements of War (22 CFR 121-128)); the Office of Export Administration, Department of Commerce (15 CFR 370.10 (j)); the Office of Foreign Assets Control, Department of Treasury (31 CFR Parts 500+) and the Department of Energy.

NOT GRANTED

No license under 35 U.S.C. 184 has been granted at this time, if the phrase "IF REQUIRED, FOREIGN FILING LICENSE GRANTED" DOES NOT appear on this form. Applicant may still petition for a license under 37 CFR 5.12, if a license is desired before the expiration of 6 months from the filing date of the application. If 6 months has lapsed from the filing date of this application and the licensee has not received any indication of a secrecy order under 35 U.S.C. 181, the licensee may foreign file the application pursuant to 37 CFR 5.15(b).

UNITED STATES PATENT AND TRADEMARK OFFICE

Commissioner for Patents
United States Patent and Trademark Office
P.O. Box 1450
Alexandria, VA 22313-1450
www.uspto.gov

THORPE NORTH & WESTERN
8180 SOUTH 700 EAST, SUITE 200
P.O. BOX 1219
SANDY, UT 84070

COPY MAILED

OCT 28 2005

OFFICE OF PETITIONS

In re Application of	:
Steven A. Johnson et al	:
Application No. 10/615,569	: DECISION ON PETITION
Filed: July 7, 2003	: UNDER 37 CFR 1.78(a)(3)
Attorney Docket No. 22027.CON	:

This is a decision on the petition under 37 CFR 1.78(a)(3), filed September 12, 2005, to accept an unintentionally delayed claim under 35 U.S.C. § 120 for the benefit of priority to the prior-filed nonprovisional applications set forth in the amendment filed concurrently with the instant petition.

The petition is **DISMISSED**.

A petition for acceptance of a claim for late priority under 37 CFR 1.78(a)(3) is only applicable to those applications filed on or after November 29, 2000. Further, the petition is appropriate only after the expiration of the period specified in 37 CFR 1.78(a)(2)(ii). In addition, the petition under 37 CFR 1.78(a)(3) must be accompanied by:

(1) the reference required by 35 U.S.C. § 120 and 37 CFR 1.78(a)(2)(i) of the prior-filed application(s), unless previously submitted;
(2) the surcharge set forth in § 1.17(t); and
(3) a statement that the entire delay between the date the claim was due under 37 CFR 1.78(a)(2)(ii) and the date the claim was filed was unintentional. The Commissioner may require additional information where there is a question whether the delay was unintentional.

The instant petition does not comply with item (1) above.

A reference to add the above-noted, prior-filed applications on page one following the first sentence of the specification has been included in a concurrently filed amendment. However, the amendment is not acceptable as drafted since it improperly incorporates by reference the prior-filed applications Petitioner's attention is directed to Dart Industries v. Banner, 636 F.2d 684,

207 USPQ 273 (C.A.D.C. 1980), where the court drew a distinction between a permissible 35 U.S.C. § 120 statement and the impermissible introduction of new matter by way of incorporation by reference in a 35 U.S.C. § 120 statement. The court specifically stated:

> Section 120 merely provides a mechanism whereby an application becomes entitled to benefit of the filing date of an earlier application disclosing the same subject matter. Common subject matter must be disclosed, in both applications, either specifically or by an express incorporation-by-reference of prior disclosed subject matter. Nothing in section 120 itself operates to carry forward any disclosure from an earlier application. In re deSeversky, supra at 674, 177 USPQ at 146-147. Section 120 contains no magical disclosure-augmenting powers able to pierce new matter barriers. It cannot, therefore, "limit" the absolute and express prohibition against new matter contained in section 251.

In order for the incorporation by reference statement to be effective as a proper safeguard against the omission of a portion of a prior application, the incorporation by reference statement must be included in the specification-as-filed, or in an amendment specifically referred to in an oath or declaration executing the application. *See* In re deSeversky, *supra*. *Note also* MPEP 201.06(c)).

Further, petitioner is advised that, where an application claims a benefit under 35 U.S.C. 120 of a chain of applications, the application must make a reference to the first (earliest) application and every intermediate application. *See* Sampson v. Ampex Corp., 463 F.2d 1042, 1044-45, 174 USPQ 417, 418-19 (2d Cir. 1972); Sticker Indus. Supply Corp. v. Blaw-Knox Co., 405 F.2d 90, 93, 160 USPQ 177, 179 (7th Cir. 1968); Hovlid v. Asari, 305 F.2d 747, 751, 134 USPQ 162, 165 (9th Cir. 1962). See also MPEP § 201.11. In addition, every intermediate application must also make a reference to the first (earliest) application and every application after the first application and before such intermediate application. MPEP Section 201.06(d). Petitioner should review the claim submitted to ensure that a reference is made to the first application and to every intermediate application.

Accordingly, before the petition under 37 CFR 1.78(a)(3) can be granted, a substitute amendment[1] deleting the incorporation by reference statement, along with a renewed petition under 37 CFR 1.78(a)(3), is required.

Further correspondence with respect to this matter should be addressed as follows:

By mail: Mail Stop PETITIONS

---

[1] *Note* 37 CFR 1.121

Commissioner for Patents
Post Office Box 1450
Alexandria, VA 22313-1450

By hand: Customer Service Window
Mail Stop Petitions
Randolph Building
401 Dulany Street
Alexandria, VA 22314

By fax: (571) 272-3220
ATTN: Office of Petitions

Any questions concerning this matter may be directed to Wan Laymon at (571) 272-3220.

Frances Hicks

Frances Hicks
Lead Petitions Examiner
Office of Petitions

UNITED STATES PATENT AND TRADEMARK OFFICE

Commissioner for Patents
United States Patent and Trademark Office
P.O. Box 1450
Alexandria, VA 22313-1450
www.uspto.gov

THORPE NORTH & WESTERN, LLP.
8180 SOUTH 700 EAST, SUITE 200
SANDY UT 84070

COPY MAILED

MAR 1 6 2007

OFFICE OF PETITIONS

In re Application of	:
JOHNSON et al.	:
Application No.: 10/615,569	: DECISION ON PETITION
Filed: July 7, 2003	: UNDER 37 CFR 1.78(a)(3)
Attorney Docket No.: 22027.CON	:

This is a decision on the petition under 37 CFR 1.78(a)(3), filed December 18, 2006, to accept an unintentionally delayed claim under 35 U.S.C. §120 for the benefit of the prior-filed nonprovisional applications set forth in the concurrently filed amendment.

The petition is **DISMISSED**.

On October 28, 2005, a decision dismissing applicant's petition under 37 CFR 1.78 was mailed to applicant indicating that the amendment to the specification was not acceptable since it improperly incorporated by reference a prior-filed application.

The instant nonprovisional application was filed after November 29, 2000, and the claim herein for the benefit of priority to the prior-filed nonprovisional applications is submitted after expiration of the period specified in 37 CFR 1.78(a)(2)(ii). Therefore, this is a proper petition under 37 CFR 1.78(a)(3).

A petition for acceptance of a claim for late priority under 37 CFR 1.78(a)(3) is only applicable to those applications filed on or after November 29, 2000. Further, the petition is appropriate only after the expiration of the period specified in 37 CFR 1.78(a)(2)(ii). In addition, the petition under 37 CFR 1.78(a)(3) must be accompanied by:

(1) the reference required by 35 U.S.C. § 120 and 37 CFR 1.78(a)(2)(i) of the prior-filed application, unless previously submitted;

(2) the surcharge set forth in § 1.17(t); and

(3) a statement that the entire delay between the date the claim was due under 37 CFR 1.78(a)(2)(ii) and the date the claim was filed was unintentional. The Commissioner may require additional information where there is a question

whether the delay was unintentional.

The petition complies with the requirements for a grantable petition under 37 CFR 1.78(a)(3) in that (1) a reference to prior-filed nonprovisional applications have been included in an amendment to the first sentence of the specification following the title, as provided by 37 CFR 1.78(a)(2)(iii) and (2) the surcharge fee required by 37 CFR 1.17(t) has been submitted.

The original petition includes a statement of unintentional delay (although the renewed petition does not). However, applicant delayed in filing the renewed petition until over one year after the mailing of the October 28, 2005 decision even though the October 28, 2005 decision set out precisely what was required to submit a grantable petition. 37 CFR 1.78(a)(3)(iii) clearly states that "The Director may require additional information where there is a question whether the delay was unintentional."

Accordingly, before the petition under 37 CFR § 1.78 can be granted, a renewed petition under 37 CFR § 1.78 including an explanation for the lengthy delay between the mail date of the Decision of October 28, 2005 and the filing of the renewed petition on December 18, 2006 is required.

Further correspondence with respect to this matter should be addressed as follows:

By mail: Mail Stop PETITIONS
Commissioner for Patents
Post Office Box 1450
Alexandria, VA 22313-1450

By hand: Customer Service Window
Mail Stop Petitions
Randolph Building
401 Dulany Street
Alexandria, VA 22314

By fax: (571) 273-8300
ATTN: Office of Petitions

Any questions concerning this matter may be directed to Daniel Stemmer at (571) 272-3301.

Daniel Stemmer
Legal Examiner
Office of the Deputy Commissioner
for Patent Examination Policy

Boris Milef
Legal Examiner
Office of the Deputy Commissioner
for Patent Examination Policy

2 8 SEP 2007

UNITED STATES PATENT AND TRADEMARK OFFICE

Commissioner for Patents
United States Patent and Trademark Office
P.O. Box 1450
Alexandria, VA 22313-1450
www.uspto.gov

THORPE NORTH & WESTERN, LLP.
8180 SOUTH 700 EAST, SUITE 200
SANDY UT 84070

In re Application of	:
JOHNSON et al.	:
Application No.: 10/615,569	: DECISION ON PETITION
Filed: July 7, 2003	: UNDER 37 CFR 1.78(a)(3)
Attorney Docket No.: 22027.CON	:

This is a decision on the petition under 37 CFR 1.78(a)(3), filed April 23, 2007, to accept an unintentionally delayed claim under 35 U.S.C. §120 for the benefit of the prior-filed nonprovisional applications set forth in the concurrently filed amendment.

The petition is **GRANTED**.

The present nonprovisional application was filed after November 29, 2000, and the claim herein for the benefit of priority to the prior-filed nonprovisional applications is submitted after expiration of the period specified in 37 CFR 1.78(a)(2)(ii). Therefore, this is a proper petition under 37 CFR 1.78(a)(3).

A petition for acceptance of a claim for late priority under 37 CFR 1.78(a)(3) is only applicable to those applications filed on or after November 29, 2000. Further, the petition is appropriate only after the expiration of the period specified in 37 CFR 1.78(a)(2)(ii). In addition, the petition under 37 CFR 1.78(a)(3) must be accompanied by:

(1) the reference required by 35 U.S.C. § 120 and 37 CFR 1.78(a)(2)(i) of the prior-filed application, unless previously submitted;

(2) the surcharge set forth in § 1.17(t); and

(3) a statement that the entire delay between the date the claim was due under 37 CFR 1.78(a)(2)(ii) and the date the claim was filed was unintentional. The Commissioner may require additional information where there is a question whether the delay was unintentional..

The petition complies with the requirements for a grantable petition under 37 CFR 1.78(a)(3) in that (1) a reference to the prior-filed nonprovisional applications has been included in an amendment to the first sentence of the specification following the title, as provided by 37 CFR 1.78(a)(2)(iii) and (2) the surcharge fee required by 37 CFR 1.17(t) has been submitted.

As to item (3), the decision mailed 16 March 2007 indicated that applicant delayed in filing the renewed petition of 18 December 2006 until over one year after the mailing of the October 28, 2005 decision even though the October 28, 2005 decision set out precisely what was required to submit a grantable petition and that before the petition under 37 CFR § 1.78 could be granted, a renewed petition under 37 CFR § 1.78 including an explanation for the lengthy delay between the mail date of the Decision of October 28, 2005 and the filing of the renewed petition on December 18, 2006 was required. The renewed petition includes a satisfactory explanation for the delay.

Accordingly, having found that the instant petition for acceptance of an unintentionally delayed claim for the benefit of priority under 35 U.S.C. § 120 to the prior-filed nonprovisional applications satisfies the conditions of 37 CFR 1.78(a)(3), the petition is granted.

The granting of the petition to accept the delayed benefit claim to the prior-filed applications under 37 CFR 1.78(a)(3) should not be construed as meaning that this application is entitled to the benefit of the prior-filed applications. In order for this application to be entitled to the benefit of the prior-filed applications, all other requirements under 35 U.S.C. § 120 and 37 CFR 1.78(a)(1) and (a)(2) must be met. Similarly, the fact that the corrected Filing Receipt accompanying this decision on petition includes the prior-filed applications should not be construed as meaning that applicant is entitled to the claim for benefit of priority to the prior-filed applications noted thereon. Accordingly, the examiner will, in due course, consider this benefit claim and determine whether this application is entitled to the benefit of the earlier filing date.

A corrected Filing Receipt, which includes the priority claim to the prior-filed nonprovisional applications, accompanies this decision on petition.

Any inquiries concerning this decision may be directed to Daniel Stemmer at (571) 272-3301. All other inquiries concerning either the examination procedures or status of the application should be directed to the Technology Center.

This matter is being referred to Technology Center Art Unit 3768 for further action as deemed appropriate in light of this decision.

Daniel Stemmer
Legal Examiner
Office of the Deputy Commissioner
for Patent Examination Policy

Boris Milef
Legal Examiner
Office of the Deputy Commissioner
for Patent Examination Policy

ATTACHMENT: Corrected Filing Receipt

UNITED STATES PATENT AND TRADEMARK OFFICE

UNITED STATES DEPARTMENT OF COMMERCE
United States Patent and Trademark Office
Address: COMMISSIONER FOR PATENTS
P.O. Box 1450
Alexandria, Virginia 22313-1450
www.uspto.gov

APPL NO.	FILING OR 371(c) DATE	ART UNIT	FIL FEE REC'D	ATTY.DOCKET NO	TOT CLMS	IND CLMS
10/615,569	07/07/2003	3768	552	22027.CON	35	4

CONFIRMATION NO. 9030

CORRECTED FILING RECEIPT

OC000000025842898

20551
THORPE NORTH & WESTERN, LLP.
8180 SOUTH 700 EAST, SUITE 350
SANDY, UT 84070

Date Mailed: 09/14/2007

Receipt is acknowledged of this nonprovisional patent application. The application will be taken up for examination in due course. Applicant will be notified as to the results of the examination. Any correspondence concerning the application must include the following identification information: the U.S. APPLICATION NUMBER, FILING DATE, NAME OF APPLICANT, and TITLE OF INVENTION. Fees transmitted by check or draft are subject to collection. Please verify the accuracy of the data presented on this receipt. **If an error is noted on this Filing Receipt, please write to the Office of Initial Patent Examination's Filing Receipt Corrections. Please provide a copy of this Filing Receipt with the changes noted thereon. If you received a "Notice to File Missing Parts" for this application, please submit any corrections to this Filing Receipt with your reply to the Notice. When the USPTO processes the reply to the Notice, the USPTO will generate another Filing Receipt incorporating the requested corrections (if appropriate).**

Applicant(s)

Steven A. Johnson, Salt Lake City, UT;
David T. Borup, Salt Lake City, UT;
James Wiskin, Salt Lake City, UT;
Michael J. Berggren, Salt Lake City, UT;

Power of Attorney:

Bradley DeSandro--34521

Domestic Priority data as claimed by applicant

This application is a CON of 10/024,035 12/17/2001 PAT 6,636,584
which is a CON of 09/471,106 12/21/1999 PAT 6,587,540
which is a CIP of 08/706,205 08/29/1996 ABN
which is a CIP of 08/486,971 06/22/1995 ABN
which is a CIP of 07/961,768 10/14/1992 PAT 5,588,032

Foreign Applications

If Required, Foreign Filing License Granted: 11/05/2003

The country code and number of your priority application, to be used for filing abroad under the Paris Convention, is US10/615,569

Projected Publication Date: Not Applicable

Non-Publication Request: No

Early Publication Request: No

**** SMALL ENTITY ****

Title

Apparatus and method for imaging objects with wavefields

Preliminary Class

600

PROTECTING YOUR INVENTION OUTSIDE THE UNITED STATES

Since the rights granted by a U.S. patent extend only throughout the territory of the United States and have no effect in a foreign country, an inventor who wishes patent protection in another country must apply for a patent in a specific country or in regional patent offices. Applicants may wish to consider the filing of an international application under the Patent Cooperation Treaty (PCT). An international (PCT) application generally has the same effect as a regular national patent application in each PCT-member country. The PCT process **simplifies** the filing of patent applications on the same invention in member countries, but **does not result** in a grant of "an international patent" and does not eliminate the need of applicants to file additional documents and fees in countries where patent protection is desired.

Almost every country has its own patent law, and a person desiring a patent in a particular country must make an application for patent in that country in accordance with its particular laws. Since the laws of many countries differ in various respects from the patent law of the United States, applicants are advised to seek guidance from specific foreign countries to ensure that patent rights are not lost prematurely.

Applicants also are advised that in the case of inventions made in the United States, the Director of the USPTO must issue a license before applicants can apply for a patent in a foreign country. The filing of a U.S. patent application serves as a request for a foreign filing license. The application's filing receipt contains further information and guidance as to the status of applicant's license for foreign filing.

Applicants may wish to consult the USPTO booklet, "General Information Concerning Patents" (specifically, the section entitled "Treaties and Foreign Patents") for more information on timeframes and deadlines for filing foreign patent applications. The guide is available either by contacting the USPTO Contact Center at 800-786-9199, or it can be viewed on the USPTO website at http://www.uspto.gov/web/offices/pac/doc/general/index.html.

For information on preventing theft of your intellectual property (patents, trademarks and copyrights), you may wish to consult the U.S. Government website, http://www.stopfakes.gov. Part of a Department of Commerce initiative, this website includes self-help "toolkits" giving innovators guidance on how to protect intellectual property in specific countries such as China, Korea and Mexico. For questions regarding patent enforcement issues, applicants may call the U.S. Government hotline at 1-866-999-HALT (1-866-999-4158).

LICENSE FOR FOREIGN FILING UNDER
Title 35, United States Code, Section 184
Title 37, Code of Federal Regulations, 5.11 & 5.15

GRANTED

The applicant has been granted a license under 35 U.S.C. 184, if the phrase "IF REQUIRED, FOREIGN FILING

LICENSE GRANTED" followed by a date appears on this form. Such licenses are issued in all applications where the conditions for issuance of a license have been met, regardless of whether or not a license may be required as set forth in 37 CFR 5.15. The scope and limitations of this license are set forth in 37 CFR 5.15(a) unless an earlier license has been issued under 37 CFR 5.15(b). The license is subject to revocation upon written notification. The date indicated is the effective date of the license, unless an earlier license of similar scope has been granted under 37 CFR 5.13 or 5.14.

This license is to be retained by the licensee and may be used at any time on or after the effective date thereof unless it is revoked. This license is automatically transferred to any related applications(s) filed under 37 CFR 1.53(d). This license is not retroactive.

The grant of a license does not in any way lessen the responsibility of a licensee for the security of the subject matter as imposed by any Government contract or the provisions of existing laws relating to espionage and the national security or the export of technical data. Licensees should apprise themselves of current regulations especially with respect to certain countries, of other agencies, particularly the Office of Defense Trade Controls, Department of State (with respect to Arms, Munitions and Implements of War (22 CFR 121-128)); the Bureau of Industry and Security, Department of Commerce (15 CFR parts 730-774); the Office of Foreign Assets Control, Department of Treasury (31 CFR Parts 500+) and the Department of Energy.

NOT GRANTED

No license under 35 U.S.C. 184 has been granted at this time, if the phrase "IF REQUIRED, FOREIGN FILING LICENSE GRANTED" DOES NOT appear on this form. Applicant may still petition for a license under 37 CFR 5.12, if a license is desired before the expiration of 6 months from the filing date of the application. If 6 months has lapsed from the filing date of this application and the licensee has not received any indication of a secrecy order under 35 U.S.C. 181, the licensee may foreign file the application pursuant to 37 CFR 5.15(b).

UNITED STATES PATENT AND TRADEMARK OFFICE

Commissioner for Patents
United States Patent and Trademark Office
P.O. Box 1450
Alexandria, VA 22313-1450
www.uspto.gov

THORPE NORTH & WESTERN, LLP.
P.O. BOX 1219
SANDY UT 84091-1219

RECEIVED

DEC 23 2008

OFFICE OF PETITIONS

In re Application of	:	
Johnson et al.	:	
Application No. 10/615,569	:	DECISION ON PETITION
Filed: July 7, 2003	:	
Attorney Docket No. 01682-22027.CIP3.CON2	:	

This is a decision on the petition under the unintentional provisions of 37 CFR 1.137(b), filed November 18, 2008, to revive the above-identified application.

The petition is **GRANTED**.

This application became abandoned for failure to timely reply to the final Office action mailed April 19, 2007. No extensions of time under the provisions of 37 CFR 1.136(a) were obtained. Accordingly, this application became abandoned on July 20, 2007. A Notice of Abandonment was mailed September 18, 2008.

The petition satisfies the requirements of 37 CFR 1.137(b) in that petitioner has supplied (1) the reply in the form of a Request for Continued Examination (RCE) and fee of $405.00, and the submission required by 37 CFR 1.114 (previously filed on June 21, 2007); (2) the petition fee of $810.00; and (3) a proper statement of unintentional delay.

Telephone inquiries concerning this decision should be directed to Joan Olszewski at (571) 272-7751.

The file is now being forwarded to Technology Center 3737 for processing of the Request for Continued Examination under 37 CFR 1.114 filed with the instant petition.

/Liana Walsh/
Liana Walsh
Petitions Examiner
Office of Petitions

UNITED STATES PATENT AND TRADEMARK OFFICE

COMMISSIONER FOR PATENTS
UNITED STATES PATENT AND TRADEMARK OFFICE
P.O. BOX 1450
ALEXANDRIA, VA 22313-1450
www.uspto.gov

ALSTON & BIRD LLP
BANK OF AMERICA PLAZA
101 SOUTH TRYON STREET, SUITE 4000
CHARLOTTE NC 28280-4000

COPY MAILED

APR 21 2004

OFFICE OF PETITIONS

In re Application of
Date, et al.
Application No. 10/615,571
Filed: July 8, 2003
Attorney Docket No. 041309/262110
For: OPTICAL DEVICE AND DISPLAY APPARATUS

DECISION DISMISSING PETITION

This is a decision on the petition filed February 19, 2004 (certificate of mailing date February 16, 2004) requesting, in effect, withdrawal of a Notice mailed January 23, 2004. The petition will be treated under 37 CFR 1.53(e).

The petition under 37 CFR 1.53(e) is **DISMISSED**.

The application was filed on July 8, 2003. However, on January 23, 2004, The Office of Initial Patent Examination mailed a "Notice of Omitted Item(s) in a Nonprovisional Application" (Notice) stating that the application had been accorded a filing date of July 8, 2003, and advising applicants that pages 93-113 of the specification appeared to have been omitted.

In response to the Notice, petitioners timely filed the present petition. Petitioners request that Office accord a July 8, 2003 filing date for pages 93-113 of the specification on the basis that the allegedly omitted pages were received in the Patent and Trademark Office (PTO) on July 8, 2003. In support, the petition is accompanied by a declaration of a support staff member of Alston & Bird LLP, Ms. Gwen Frickhoeffer, who reviewed the application and attests to the fact that pages 93-113 were present.

The declaration submitted with the petition states without equivocation or doubt that Ms. Frickhoeffer checked the assembled application papers to determine that the application included all pages of specification.

The Office file is the official record of what was filed on July 8, 2003. An applicant alleging that a paper was filed in the Office and later misplaced has the burden of proving the allegation by a preponderance of the evidence. In this regard, declarations by individuals involved in the preparation and mailing of the original application reciting their personal recollection or belief of what was contained in the application that they reviewed and/or mailed are no more persuasive of what was actually mailed than the contents of the official record. Such declarations are usually made months after the actual events recited. In this case, the declaration was made on February 16, 2004, more than seven (7) months after the application was actually mailed.

It is for this reason that the Office has established a practice of providing a receipt for papers filed in the Office to any applicant desiring a receipt. The practice, which was long ago established and is well publicized, requires that any paper for which a receipt is desired be filed in the Office with a self-addressed postcard identifying the paper. A postcard receipt which itemizes and properly identifies the papers which are being filed serves as *prima facie* evidence of receipt in the Office of all the items listed thereon on the date stamped thereon by the Office. See section 503, Manual Of Patent Examining Procedure (MPEP 503). However, if the postcard receipt has been

annotated to indicate that a particular item denoted on the postcard was not received by the USPTO, the postcard receipt will not serve as prima facie evidence of receipt of that item in the USPTO. MPEP 503. Petitioners have not submitted their itemized postcard receipt.[1] Petitioners have not proven that pages 93-113 were present in the Office on July 8, 2003.

In the alternative, petitioners argue that pages 93-113 should be included with the papers filed on July 8, 2003, because they were originally filed in prior application No. 09/361,856, the entire disclosure of which was incorporated by reference at the time of the present application's filing.

Applicants seek to add the pages to the present application on the basis that the pages are not new matter. However, no petition is necessary for that purpose. Additional pages of specification may be entered by the primary examiner without a petition so long as the pages contain no new matter. See MPEP § 608.02(a).

MPEP 201.06(c) states that:

> . . . an applicant may incorporate by reference the prior application by including, in the application-as-filed, a statement that such specifically enumerated prior application or applications are "hereby incorporated herein by reference." The statement may appear in the specification or in the application transmittal letter. The inclusion of this incorporation by reference of the prior application(s) will permit an applicant to amend the continuing application to include any subject matter in such prior application(s), <u>without the need for a petition</u>. (emphasis supplied)

If applicants desire that pages 93-113 be added to the application, the appropriate procedure is by way of amendment requesting the entry of the pages. Any such amendment should be filed prior to the first action on the merits and will be considered by the primary examiner.

Accordingly, the petition is inappropriate and is subject to dismissal.

The petition fee will not be refunded, since the petition was not necessitated by any error on the part of the Office.

The application will be forwarded to Technology Center 3600 for examination in due course. Pages 93-113 will not be processed at this time.

Telephone inquiries specific to this matter should be directed to the undersigned at (703) 308-6712.

E. Shirene Willis

E. Shirene Willis
Senior Petitions Attorney
Office of Petitions
Office of the Deputy Commissioner
for Patent Examination Policy

---

[1] It is noted that the transmittal letter in the application file has been annotated with "The PTO did not receive the following listed item(s) 93 - 113 pages of specification."

UNITED STATES PATENT AND TRADEMARK OFFICE

Commissioner for Patents
United States Patent and Trademark Office
P.O. Box 1450
Alexandria, VA 22313-1450
www.uspto.gov

JAN 11 2006

Justin Boyce
DECHERT LLP
P.O. Box 10004
Palo Alto, CA 94304-0961

In re Application of:	:	
Robert Hunter	:	
Serial No.: 10/615,572	:	DECISION ON REQUEST TO WITHDRAW FROM RECORD
Filed: July 8, 2003	:	
Attorney Docket No.: **375283-00102**	:	

This is a decision on the request to withdraw as attorney/agent of record under 37 C.F.R. § 1.36, filed May 19, 2005.

A grantable request to withdraw as attorney of record must be signed by every attorney seeking to withdraw or contain a clear indication that one attorney is signing on behalf of others. A request to withdraw will not be approved unless at least thirty (30) days would remain between the date of approval and the later of the expiration date of a time to file a response or the expiration date of the maximum time period, which can be extended under 37 C.F.R. § 1.136(a).

The request meets all the above stated requirements. The request was signed by Justin Boyce, on behalf of himself and all the attorneys/agents of record.

The request is **APPROVED**.

There are no attorneys of record at this time.

All future communications from the Office will be directed to Robert Hunter, of TrendPoint Systems, Inc., at the below address, until otherwise notified by applicant.

Inquiries related to this decision should be directed to Clayton E. LaBalle, at (571) 272-1594.

Clayton E. LaBalle, Special Programs Examiner
Technology Center 2800
Semiconductors, Electrical and Optical
Systems and Components

cc: Robert Hunter
TRENDPOINT SYSTEMS, INC.
111 Deerwood Road, Suite 200
Palo Alto CA 94583

UNITED STATES PATENT AND TRADEMARK OFFICE

COMMISSIONER FOR PATENTS
UNITED STATES PATENT AND TRADEMARK OFFICE
P.O. BOX 1450
ALEXANDRIA, VA 22313-1450
www.uspto.gov

MAILED
FROM DIRECTORS OFFICE

MAR 0 4 2005

TECHNOLOGY CENTER 3600

Vincent Riemma
P.O. Box # 489
Glenmont, NY 12077

In re Application of :
Vincent Riemma :
Application No. 10/615,577 :
Filed: September 27, 2001 :
For: AQUARIUM WATER CHANGING AND WATER STABILIZATION SYSTEM

DECISION ON PETITION TO WITHDRAW THE HOLDING OF ABANDONMENT

This a response applicant's petition to withdraw the holding of abandonment, filed in the United States Patent and Trademark Office on September 23, 2004, under 37 CFR 1.181.

The petition is **DISMISSED**.

The petition submitted September 23, 2004 is unsigned, and cannot be further treated on the merits.

Any request for reconsideration of this decision must be submitted within **TWO (2) MONTHS** from the mail date of this decision. Extensions of time under 37 CFR 1.136(b) are permitted. The reconsideration request should include a cover letter entitled "Renewed Petition to Withdraw the Holding of Abandonment Under 37 CFR 1.181."

Steven N. Meyers
Special Programs Examiner
Patent Technology Center 3600
(703) 308-3868

SNM/rwg: 2/02/05

UNITED STATES PATENT AND TRADEMARK OFFICE

Commissioner for Patents
United States Patent and Trademark Office
P.O. Box 1450
Alexandria, VA 22313-1450
www.uspto.gov

VINCENT RIEMMA
P.O. BOX #489
GLENMONT NY 12077

COPY MAILED

JAN 2 5 2006

OFFICE OF PETITIONS

In re Application of :
Vincent Riemma :
Application No. 10/615,577 :
Filed: July 8, 2003 :
Attorney Docket No. N/A :

ON PETITION

This is a decision on the request for reconsideration of petition under 37 CFR 1.181, filed March 21, 2005, to withdraw the holding of abandonment. The petition was recently forwarded to this office for consideration.

The petition is **dismissed**.

Any request for reconsideration of this decision must be submitted within TWO (2) MONTHS from the mail date of this decision. Extensions of time under 37 CFR 1.136(a) are permitted. The reconsideration request should include a cover letter entitled "Request For Reconsideration of Petition under 37 CFR 1.181."

This application became abandoned for failure to timely reply to the non-final Office action mailed February 12, 2004, which set a one (1) month period for response. Accordingly, this application became abandoned on March 13, 2004. A Notice of Abandonment was mailed on September 8, 2004.

Petitioner contends a timely response was submitted to the Office on February 27, 2004, via USPS Express Mail service. In support, the petition is accompanied by a copy of the Express Mail mailing label (#ER710955770US) that indicates a "date-in" of February 27, 2004, and a copy of the papers purportedly deposited on that date.

37 CFR 1.10(e) states:

> Any person mailing correspondence addressed as set out in § 1.1(a) to the Office with sufficient postage utilizing the "Express Mail Post Office to Addressee" service of the USPS but not received by the Office, may petition the Director to consider such correspondence filed in the Office on the USPS deposit date, provided that:

(1) The petition is filed promptly after the person becomes aware that the Office has no evidence of receipt of the correspondence;

(2) The number of the "Express Mail" mailing label was placed on the paper(s) or fee(s) that constitute the correspondence prior to the original mailing by "Express Mail";

(3) The petition includes a copy of the originally deposited paper(s) or fee(s) that constitute the correspondence showing the number of the "Express Mail" mailing label thereon, a copy of any returned postcard receipt, a copy of the "Express Mail" mailing label showing the "date-in," a copy of any other official notation by the USPS relied upon to show the date of deposit, and, if the requested filing date is a date other than the "date-in" on the "Express Mail" mailing label or other official notation entered by the USPS, a showing pursuant to paragraph (d)(3) of this section that the requested filing date was the date the correspondence was deposited in the "Express Mail Post Office to Addressee" service prior to the last scheduled pickup for that day;

(4) The petition includes a statement which establishes, to the satisfaction of the Director, the original deposit of the correspondence and that the copies of the correspondence, the copy of the "Express Mail" mailing label, the copy of any returned postcard receipt, and any official notation entered by the USPS are true copies of the originally mailed correspondence, original "Express Mail" mailing label, returned postcard receipt, and official notation entered by the USPS.

After careful review, it is found that the instant petition does not satisfy the requirements of 37 CFR 1.10(e)(2). The number of the "Express Mail" mailing label is not found on the "COPY of Original Response sent late February 2004." As such, it is impossible to connect the "COPY of Original Response sent late February 2004" with Express Mail mailing label (#ER710955770US).

Accordingly, the petition must be dismissed.

Please note, the Office has a well established and well publicized practice of providing a receipt for papers filed in the Office to any applicant desiring a receipt. The practice requires that any paper for which a receipt is desired be filed in the Office with a self-addressed postcard identifying the paper. A postcard receipt which itemizes and properly identifies the papers which are being filed serves as prima facie evidence of receipt in the Office of all the items listed thereon on the date stamped thereon by the Office. *See* MPEP 503.

Petitioner should consider filing a petition to revive an abandoned application under 37 CFR 1.137(b).

Further correspondence with respect to this matter should be addressed as follows:

By mail: Mail Stop Petition
Commissioner for Patents
Box 1450
Alexandria, VA 22313

By FAX: (571) 273-8300
Attn: Office of Petitions

By hand: Customer Service Window
Randolph Building
401 Dulany Street
Alexandria, VA 22314

Telephone inquiries concerning this matter may be directed to the undersigned at (571) 272-3228.

Edward J. Tannouse
Petitions Attorney
Office of Petitions
Office of the Deputy Commissioner
for Patent Examination Policy

UNITED STATES PATENT AND TRADEMARK OFFICE

Commissioner for Patents
United States Patent and Trademark Office
P.O. Box 1450
Alexandria, VA 22313-1450
www.uspto.gov

VINCENT RIEMMA
P.O. BOX #489
GLENMONT, NY 12077

COPY MAILED
APR 0 4 2006
OFFICE OF PETITIONS

In re Application of :
Vincent Riemma :
Application No. 10/615,577 : ON PETITION
Filed: July 8, 2003 :
Attorney Docket No. N/A :

This is a decision on the papers filed February 2, 2006, which have been treated as a petition under 37 C.F.R. 1.137(b), to revive the above-identified application.

The petition is **dismissed**.

Any request for reconsideration of this decision must be submitted within TWO (2) MONTHS from the mail date of this decision. Extensions of time under 37 CFR 1.136(a) are permitted. The reconsideration request should include a cover letter entitled "Renewed Petition under 37 CFR 1.137(b)."

This application became abandoned for failure to timely reply to the non-final Office action mailed February 12, 2004, which set a one (1) month period for response. Accordingly, this application became abandoned on March 13, 2004. A Notice of Abandonment was mailed on September 8, 2004.

Effective December 1, 1997, the provisions of 37 CFR 1.137(b) now provide that where the delay in reply was unintentional, a petition may be filed to revive an abandoned application pursuant to 37 CFR 1.137(b). A grantable petition pursuant to 37 CFR 1.137(b) must be accompanied by:

(1) the required reply, unless previously filed. In a nonprovisional application abandoned for failure to prosecute, the required reply may be met by the filing of a continuing application. In an application, abandoned or lapsed for failure to pay the issue fee or any portion thereof, the required reply must be the payment of the issue fee or any outstanding balance thereof.

(2) the petition fee as set forth in 37 CFR 1.17(m);

(3) a statement that the **entire** delay in filing the required reply from the due date for the reply until the filing of a grantable petition pursuant to 37 CFR 1.137(b) was unintentional. The Commissioner may require additional information where there is a question whether the delay was unintentional; and

(4) any terminal disclaimer (and fee set forth in 37 CFR 1.20(d)) required pursuant to 37 CFR 1.137(d).

The required petition fee has not been submitted. As such, the petition cannot be reviewed on the merits at this time.

Further correspondence with respect to this matter should be addressed as follows:

By mail: Mail Stop Petition
Commissioner for Patents
Box 1450
Alexandria, VA 22313

By FAX: (571) 273-8300
Attn: Office of Petitions

By hand: Customer Service Window
Randolph Building
401 Dulany Street
Alexandria, VA 22314

Telephone inquiries should be directed to the undersigned at (571) 272-3228.

Edward J. Tannouse
Petitions Attorney
Office of Petitions
Office of the Deputy Commissioner
for Patent Examination Policy

Attachment:
Form PTO/SB/64

PTO/SB/64 (10-05)
Approved for use through 07/31/2006. OMB 0651-0031
U.S. Patent and Trademark Office; U.S. DEPARTMENT OF COMMERCE
Under the Paperwork Reduction Act of 1995, no persons are required to respond to a collection of information unless it displays a valid OMB control number.

PETITION FOR REVIVAL OF AN APPLICATION FOR PATENT ABANDONED UNINTENTIONALLY UNDER 37 CFR 1.137(b)

Docket Number (Optional)

First named inventor:

Application No.: Art Unit:

Filed: Examiner:

Title:

Attention: Office of Petitions
Mail Stop Petition
Commissioner for Patents
P.O. Box 1450
Alexandria, VA 22313-1450
FAX (571) 273-8300

NOTE: If information or assistance is needed in completing this form, please contact Petitions Information at (571) 272-3282.

The above-identified application became abandoned for failure to file a timely and proper reply to a notice or action by the United States Patent and Trademark Office. The date of abandonment is the day after the expiration date of the period set for reply in the office notice or action plus an extensions of time actually obtained.

APPLICANT HEREBY PETITIONS FOR REVIVAL OF THIS APPLICATION

NOTE: A grantable petition requires the following items:
(1) Petition fee;
(2) Reply and/or issue fee;
(3) Terminal disclaimer with disclaimer fee - required for all utility and plant applications filed before June 8, 1995; and for all design applications; and
(4) Statement that the entire delay was unintentional.

1. Petition fee

☐ Small entity-fee $ _____ (37 CFR 1.17(m)). Applicant claims small entity status. See 37 CFR 1.27.

☐ Other than small entity – fee $ _____ (37 CFR 1.17(m))

2. Reply and/or fee

A. The reply and/or fee to the above-noted Office action in the form of _____(identify type of reply):

☐ has been filed previously on _____.
☐ is enclosed herewith.

B. The issue fee and publication fee (if applicable) of $ _____.

☐ has been paid previously on _____.
☐ is enclosed herewith.

This collection of information is required by 37 CFR 1.137(b). The information is required to obtain or retain a benefit by the public which is to file (and by the USPTO to process) an application. Confidentiality is governed by 35 U.S.C. 122 and 37 CFR 1.11 and 1.14. This collection is estimated to take 1.0 hour to complete, including gathering, preparing, and submitting the completed application form to the USPTO. Time will vary depending upon the individual case. Any comments on the amount of time you require to complete this form and/or suggestions for reducing this burden, should be sent to the Chief Information Officer, U.S. Patent and Trademark Office, U.S. Department of Commerce, P.O. Box 1450, Alexandria, VA 22313-1450. DO NOT SEND FEES OR COMPLETED FORMS TO THIS ADDRESS. **SEND TO: Mail Stop Petition, Commissioner for Patents, P.O. Box 1450, Alexandria, VA 22313-1450.**

If you need assistance in completing the form, call 1-800-PTO-9199 and select option 2.

Under the Paperwork Reduction Act of 1995, no persons are required to respond to a collection of information unless it displays a valid OMB control number.

3. Terminal disclaimer with disclaimer fee

☐ Since this utility/plant application was filed on or after June 8, 1995, no terminal disclaimer is required.

☐ A terminal disclaimer (and disclaimer fee (37 CFR 1.20(d)) of $ _____ for a small entity or $ _____ for other than a small entity) disclaiming the required period of time is enclosed herewith (see PTO/SB/63).

4. STATEMENT: The entire delay in filing the required reply from the due date for the required reply until the filing of a grantable petition under 37 CFR 1.137(b) was unintentional. [NOTE: The United States Patent and Trademark Office may require additional information if there is a question as to whether either the abandonment or the delay in filing a petition under 37 CFR 1.137(b) was unintentional (MPEP 711.03(c), subsections (III)(C) and (D)).]

WARNING:

Petitioner/applicant is cautioned to avoid submitting personal information in documents filed in a patent application that may contribute to identity theft. Personal information such as social security numbers, bank account numbers, or credit card numbers (other than a check or credit card authorization form PTO-2038 submitted for payment purposes) is never required by the USPTO to support a petition or an application. If this type of personal information is included in documents submitted to the USPTO, petitioners/applicants should consider redacting such personal information from the documents before submitting them to the USPTO. Petitioner/applicant is advised that the record of a patent application is available to the public after publication of the application (unless a non-publication request in compliance with 37 CFR 1.213(a) is made in the application) or issuance of a patent. Furthermore, the record from an abandoned application may also be available to the public if the application is referenced in a published application or an issued patent (see 37 CFR 1.14). Checks and credit card authorization forms PTO-2038 submitted for payment purposes are not retained in the application file and therefore are not publicly available.

Signature	Date
Typed or printed name	Registration Number, if applicable
Address	Telephone Number
Address	

Enclosures:
- ☐ Fee Payment
- ☐ Reply
- ☐ Terminal Disclaimer Form
- ☐ Additional sheets containing statements establishing unintentional delay
- ☐ Other: _____

CERTIFICATE OF MAILING OR TRANSMISSION [37 CFR 1.8(a)]

I hereby certify that this correspondence is being:

☐ Deposited with the United States Postal Service on the date shown below with sufficient postage as first class mail in an envelope addressed to: Mail Stop Petition, Commissioner for Patents, P. O. Box 1450, Alexandria, VA 22313-1450.

☐ Transmitted by facsimile on the date shown below to the United States Patent and Trademark Office as (571) 273-8300.

Date	Signature
	Typed or printed name of person signing certificate

Privacy Act Statement

The **Privacy Act of 1974 (P.L. 93-579)** requires that you be given certain information in connection with your submission of the attached form related to a patent application or patent. Accordingly, pursuant to the requirements of the Act, please be advised that: (1) the general authority for the collection of this information is 35 U.S.C. 2(b)(2); (2) furnishing of the information solicited is voluntary; and (3) the principal purpose for which the information is used by the U.S. Patent and Trademark Office is to process and/or examine your submission related to a patent application or patent. If you do not furnish the requested information, the U.S. Patent and Trademark Office may not be able to process and/or examine your submission, which may result in termination of proceedings or abandonment of the application or expiration of the patent.

The information provided by you in this form will be subject to the following routine uses:

1. The information on this form will be treated confidentially to the extent allowed under the Freedom of Information Act (5 U.S.C. 552) and the Privacy Act (5 U.S.C 552a). Records from this system of records may be disclosed to the Department of Justice to determine whether disclosure of these records is required by the Freedom of Information Act.
2. A record from this system of records may be disclosed, as a routine use, in the course of presenting evidence to a court, magistrate, or administrative tribunal, including disclosures to opposing counsel in the course of settlement negotiations.
3. A record in this system of records may be disclosed, as a routine use, to a Member of Congress submitting a request involving an individual, to whom the record pertains, when the individual has requested assistance from the Member with respect to the subject matter of the record.
4. A record in this system of records may be disclosed, as a routine use, to a contractor of the Agency having need for the information in order to perform a contract. Recipients of information shall be required to comply with the requirements of the Privacy Act of 1974, as amended, pursuant to 5 U.S.C. 552a(m).
5. A record related to an International Application filed under the Patent Cooperation Treaty in this system of records may be disclosed, as a routine use, to the International Bureau of the World Intellectual Property Organization, pursuant to the Patent Cooperation Treaty.
6. A record in this system of records may be disclosed, as a routine use, to another federal agency for purposes of National Security review (35 U.S.C. 181) and for review pursuant to the Atomic Energy Act (42 U.S.C. 218(c)).
7. A record from this system of records may be disclosed, as a routine use, to the Administrator, General Services, or his/her designee, during an inspection of records conducted by GSA as part of that agency's responsibility to recommend improvements in records management practices and programs, under authority of 44 U.S.C. 2904 and 2906. Such disclosure shall be made in accordance with the GSA regulations governing inspection of records for this purpose, and any other relevant (*i.e.*, GSA or Commerce) directive. Such disclosure shall not be used to make determinations about individuals.
8. A record from this system of records may be disclosed, as a routine use, to the public after either publication of the application pursuant to 35 U.S.C. 122(b) or issuance of a patent pursuant to 35 U.S.C. 151. Further, a record may be disclosed, subject to the limitations of 37 CFR 1.14, as a routine use, to the public if the record was filed in an application which became abandoned or in which the proceedings were terminated and which application is referenced by either a published application, an application open to public inspection or an issued patent.
9. A record from this system of records may be disclosed, as a routine use, to a Federal, State, or local law enforcement agency, if the USPTO becomes aware of a violation or potential violation of law or regulation.

UNITED STATES PATENT AND TRADEMARK OFFICE

Commissioner for Patents
United States Patent and Trademark Office
P.O. Box 1450
Alexandria, VA 22313-1450
www.uspto.gov

VINCENT RIEMMA
P.O. BOX #489
GLENMONT, NY 12077

COPY MAILED

JUN 22 2006

OFFICE OF PETITIONS

In re Application of :
Vincent Riemma :
Application No. 10/615,577 :
Filed: July 8, 2003 :
Attorney Docket No. RIEM-0001 :

ON PETITION

This is a decision on the renewed petition under 37 CFR 1.137(b), filed June 2, 2006, to revive the above-identified application.

The petition is **GRANTED**.

This application became abandoned for failure to timely reply to the non-final Office action mailed February 12, 2004, which set a one (1) month period for response. Accordingly, this application became abandoned on March 13, 2004. A Notice of Abandonment was mailed on September 8, 2004.

It is not apparent whether the statement of unintentional delay was signed by a person who would have been in a position of knowing that the entire delay in filing the required reply from the due date for the reply until the filing of a grantable petition pursuant to 37 CFR 1.137(b) was unintentional. Nevertheless, in accordance with 37 CFR 10.18, the statement is accepted as constituting a certification of unintentional delay. However, in the event that petitioner has no knowledge that the delay was unintentional, petitioner must make such an inquiry to ascertain that, in fact, the delay was unintentional. If petitioner discovers that the delay was intentional, petitioner must so notify the Office.

Additionally, the application file does not indicate a change of address has been filed in this case, although the address given on the petition differs from the address of record. A change of address should be filed in this case in accordance with MPEP 601.03.

Furthermore, there is no indication that petitioner herein was ever empowered to prosecute the instant application. If petitioner desires to receive future correspondence regarding this application, the appropriate power of attorney documentation must be submitted.

A courtesy copy of this decision will be mailed to petitioner. However, all future correspondence will be directed to the address of record until such time as appropriate instructions are received to the contrary.

The file is being forwarded to Technology Center 3600 for review of the response filed June 2, 2006, *in due course*.

Telephone inquiries concerning this matter may be directed to the undersigned at (571) 272-3228.

Edward J. Tannouse
Petitions Attorney
Office of Petitions/Patent
Office of the Deputy Commissioner
for Patent Examination Policy

HUNTER E. WEBB
HOFFMAN, WARNICK & D'ALESSANDRO, LLC
75 STATE STREET
14th FLOOR
ALBANY, NY 12207

UNITED STATES PATENT AND TRADEMARK OFFICE

COMMISSIONER FOR PATENTS
UNITED STATES PATENT AND TRADEMARK OFFICE
P.O. BOX 1450
ALEXANDRIA, VA 22313-1450
WWW.USPTO.GOV

Paper No. None

NIXON & VANDERHYE, PC
1100 N GLEBE ROAD
8TH FLOOR
ARLINGTON VA 22201-4714

COPY MAILED

MAR 0 9 2004

OFFICE OF PETITIONS

In re Application of
James Thornsberry, Gregory Islas, and
Robert H. Blanpied
Application No. 10/615,591
Filed: July 9, 2003
Attorney Docket No. 2334-213
Title: THERMOSETTING PLASTIC
FOAMS AND METHODS OF
PRODUCTION THEREOF USING
ADHESION ADDITIVES

DECISION ON PETITION

This is in response to the petition under 37 C.F.R. §1.47(a)[1], filed January 5, 2004.

On July 9, 2003, the application was deposited, identifying James Thornsberry, Gregory Islas, and Robert H. Blanpied as joint inventors. The application was deposited without a fully executed oath or declaration. On October 8, 2003, applicant was mailed a "Notice to File Missing Parts of Nonprovisional Application - Filing Date Granted" (Notice), requiring an executed oath or declaration in compliance with 37 C.F.R. §1.63 and a

[1]A grantable petition under 37 C.F.R. §1.47(a) requires:

(1) the petition fee of $130;
(2) a surcharge of either $65 or $130 if the petition is not filed at the time of filing the application, as set forth in 37 CFR § 1.16(e);
(3) a statement of the last known address of the non-signing inventors;
(4) either
  a) proof that a copy of the entire application (specification, claims, drawings, and the oath or declaration) was sent or given to the non-signing inventor for review and proof that the non-signing inventor refuses to join in the application or
  b) proof that the non-signing inventor cannot be found or reached after diligent effort;
(5) a declaration which complies with 37 CFR §1.63.

surcharge for its late filing. The Notice further indicated that the basic filing fee, was required, and set a two-month period for reply.

On January 5, 2004, petitioner submitted a copy of the declaration[2], the instant petition, the last known address of the non-signing inventor, a declaration of facts, copies of several letters, an assignment document, the basic filing fee, and a one-month extension of time to make timely this reply.

The above-identified application and papers have been reviewed and found in compliance with 37 CFR 1.47(a). This application is hereby accorded Rule 1.47(a) status.

As provided in Rule 1.47(a), this Office will forward notice of this application's filing to the non-signing inventors at the addresses given in the petition. Notice of the filing of this application will also be published in the Official Gazette.

After this decision is mailed, the application will be forwarded to the Office of Initial Patent Examination for further processing.

Telephone inquiries regarding this decision should be directed to the undersigned at (703) 305-0011.

Paul Shanoski
Attorney
Office of Petitions
United States Patent and Trademark Office

2 The declaration submitted with the instant petition was not executed by joint inventor Gregory Islas.

UNITED STATES PATENT AND TRADEMARK OFFICE

COMMISSIONER FOR PATENTS
UNITED STATES PATENT AND TRADEMARK OFFICE
P.O. BOX 1450
ALEXANDRIA, VA 22313-1450
WWW.USPTO.GOV

Gregory Islas
2711 Elm Drive
Meridian, MS 39307

COPY MAILED
MAR 0 9 2004
OFFICE OF PETITIONS

In re Application of
James Thornsberry, Gregory Islas, and Robert H. Blanpied
Application No. 10/615,591
Filed: July 9, 2003
Attorney Docket No. 2334-213
Title: THERMOSETTING PLASTIC FOAMS AND METHODS OF PRODUCTION THEREOF USING ADHESION ADDITIVES

LETTER

Dear Mr. Islas:

You are named as a joint inventor in the above-identified United States patent application filed under the provisions of 35 U.S.C. 116 (United States Code) and 37 CFR 1.47(a), Rules of Practice in Patent Cases. Should a patent be granted on the application you will be designated therein as a joint inventor.

As a named inventor you are entitled to inspect any paper in the file wrapper of the application, order copies of all or any part thereof (at a prepaid cost per 37 CFR 1.19) or make your position of record in the application. Alternatively, you may arrange to do any of the preceding through a registered patent attorney or agent presenting written authorization from you. If you care to join the application, agent of record (see below) would presumably assist you. Joining in the application would entail the filing of an appropriate oath or declaration by you pursuant to 37 CFR 1.63.

Telephone inquiries regarding this communication should be directed to the undersigned at (703) 305-0011. Requests for information regarding your application should be directed to the File Information Unit at (703) 308-2733. Information regarding how to pay for and order a copy of the application, or a specific paper in the application, should be directed to the Certification Division at (703) 308-9726 or 1-800-972-6382 (outside the Washington D.C. area).

Paul Shanoski
Attorney
Office of Petitions
United States Patent and Trademark Office

NIXON & VANDERHYE, PC
1100 N GLEBE ROAD
8TH FLOOR
ARLINGTON VA 22201-4714

UNITED STATES PATENT AND TRADEMARK OFFICE

COMMISSIONER FOR PATENTS
UNITED STATES PATENT AND TRADEMARK OFFICE
P.O. BOX 1450
ALEXANDRIA, VA 22313-1450
www.uspto.gov

08 OCT 2003

Schwegman, Lundberg, Woessner
& Kluth, P.A.
PO Box 2938
Minneapolis, MN 55402

In re Application of
Warren
Application No.: 10/615,636
Filing Date: 10 July 2003
Attorney's Docket No.: 279.044US1
For: CARDIAC RHYTHM MANAGEMENT SYSTEM WITH TIME-DEPENDENT FREQUENCY RESPONSE

DECISION ON PETITION FOR REVIVAL UNDER 37 CFR 1.137(b)

Applicant's petition under 37 CFR 1.137(b) filed 10 July 2003 to revive international application PCT/US00/06090 abandoned under 35 U.S.C. 371(d) is hereby **GRANTED** as to the national stage in the United States of America as follows:

International application PCT/US00/06090 became abandoned as to the United States of America at midnight on 13 September 2001 for failure to pay the basic national fee.

The filing of the continuing application 10/615,636 on 10 July 2003 under 35 U.S.C. 111(a) is accepted as the appropriate response under 37 CFR 1.137(b) (See MPEP §MPEP 711.03(c)(III)(A), 1895.01(II) (Rev. 1, Feb. 2003). International application PCT/US00/06090 is being revived for purposes of continuity only. Since continuity has been established by this decision reviving the international application, the international application is again abandoned in favor of continuing application number 10/615,626.

Leonard Smith
PCT Legal Examiner
PCT Legal Office

RC Tang
Petitions Attorney
PCT Legal Office
Telephone: 703-308-1315
Facsimile: 703-308-6459

OIPE JC67
JUL 10 2003
PATENT & TRADEMARK OFFICE

10/615,636

DT14 Rec'd PCT/PTO 10 JUL 2003

PCT

PATENT

IN THE UNITED STATES PATENT AND TRADEMARK OFFICE

Applicant:	Jay A. Warren	Examiner: Unknown
Serial No.:	Not Assigned (Parent: PCT/US00/06090)	Group Art Unit: Unknown
Filed:	Herewith (Parent: 3/9/2000)	Docket: 279.044US1
Title:	CARDIAC RHYTHM MANAGEMENT SYSTEM WITH TIME-DEPENDENT FREQUENCY RESPONSE	

PETITION TO REVIVE UNDER 37 CFR § 1.137(b)

Mail Stop Petitions
Commissioner for Patents
P.O.Box 1450
Alexandria, VA 22313-1450

Dear Sir:

The above-identified application became abandoned for failure to file a timely and proper U.S. Patent Application continuing a PCT Application which claims the benefit of a Provisional Patent Application, as stated herein.

Applicant submits herewith the U.S. Patent Application and a Preliminary Amendment. The application filing fee will be paid upon receipt of the Notice to File Missing Parts.

The entire delay in filing the required reply from the due date for the required reply until the filing of this Petition Under 37 CFR 1.137(b) was unintentional.

Please charge the petition fee of $1,300.00, as required under 37 CFR 1.17(m), and any additional fees deemed necessary, to Deposit Account 19-0743.

Respectfully submitted,
JAY A. WARREN
By his Representatives,
SCHWEGMAN, LUNDBERG, WOESSNER & KLUTH, P.A.
P.O. Box 2938
Minneapolis, MN 55402
612-373-6912

Date July 3, 2003 By

Timothy E Bianchi
Reg. No. 39,610

CERTIFICATE UNDER 37 CFR 1.8: The undersigned hereby certifies that this correspondence is being deposited with the United States Postal Service with sufficient postage as first class mail, in an envelope addressed to: Mail Stop Petitions, Commissioner for Patents, P.O.Box 1450, Alexandria, VA 22313-1450 on this 3 day of July, 2003.

GREG HANSON
Name

Signature

UNITED STATES PATENT AND TRADEMARK OFFICE

Commissioner for Patents
United States Patent and Trademark Office
P.O. Box 1450
Alexandria, VA 22313-1450
www.uspto.gov

JUN - 6 2005

James A. Pinto
DORSEY & WHITNEY LLP
4700 Republic Plaza Building
370 Seventeenth Street
Denver, CO 80202-5647

In re Application of:	:	
Doug McCain	:	**DECISION ON PETITION**
Serial No. 10/615,638	:	**TO MAKE SPECIAL**
Filed: July 8, 2003	:	**(APPLICANT'S HEALTH)**
For: WINE RACK	:	

This is a decision on the petition filed March 9, 2005 under 37 CFR 1.102 (c) to make the above-identified application special under the procedure set forth in MPEP 708.02, Section III: Applicant's Health. There is no fee for this petition.

A grantable petition to make an application special under 37 C.F.R. 1.102(c), MPEP 708.02, Section III requires evidence that the state of health of the applicant is such that he might not be able to assist in the prosecution of the application if it were to run its normal course.

The petition includes a letter from the applicant's doctor dated December 2, 2004 attesting to the fact that the state of health of Doug McCain is such that he might not be available to assist in the prosecution of his patent application if it were to run its normal course. It is therefore clear from the evidence that the applicant might not be able to assist in the prosecution of the application due to his health if said prosecution were to run its normal course.

For the above stated reasons, the petition is **GRANTED**.

The examiner is directed (1) to make an interference search for possible interfering applications; (2) to promptly examine this application out of turn; and (3) if any interfering application is discovered, to examine such application simultaneously and state in the first official letter of such application that it is being taken out of turn because of a possible interference.

Petitioner is advised that this application will continue to be special, throughout its entire prosecution and pendency, including interference and appeal, if any, only if petitioner makes a prompt *bona fide* effort, in response to each Office action, to place the application in condition for allowance, even if it is necessary to conduct an interview with the examiner to accomplish this purpose.

Randolph A. Reese
Special Programs Examiner
Technology Center 3600
(571) 272-6619

RAR/js: 6/2/05

UNITED STATES PATENT AND TRADEMARK OFFICE

Commissioner for Patents
United States Patent and Trademark Office
P.O. Box 1450
Alexandria, VA 22313-1450
www.uspto.gov

Bruce H. Cottrell
Los Alamos National Laboratory
LC/IP, MS A187
Los Alamos NM 87545

COPY MAILED

AUG 1 9 2005

OFFICE OF PETITIONS

In re Application of :
Jia et al. : DECISION GRANTED
Application No. 10/615,645 :
Deposited: July 8, 2003 :
Attorney Docket No.: S-97,819 :

This is a decision on the Petition filed July 22, 2005, requesting that the above-identified application be accorded the filing date of July 8, 2003.

Application papers in the above-identified application were deposited on July 8, 2003. However, on May 20, 2005, the Office of Initial Patent Examination mailed a "Notice of Incomplete Nonprovisional Application", notifying applicants that the application papers had **not** been accorded a filing date because the application was deposited without a complete specification which includes at least one claim pursuant to 35 USC 112. The notice stated pages 2-19 of the specification were missing. The Notice also stated the papers were deposited without an oath or declaration and required replacement drawings

In response, 18 sheets of specification and claims, including pages 2-19 (pages 18-19 contain claims) replacement drawings and the present petition were filed on July 22, 2005. The petition contends that the application as filed included a complete specification which included at least one claim. In support, the petition is accompanied by a copy of applicant's postcard receipt which acknowledges receipt in the office of "Specification (17 pages), claims (2 pages) " on July 8, 2003.

Applicant's postcard receipt is prima facie[1] evidence that a total of 19 pages of application including a complete specification with at least claim were received on July 8, 2003, but a complete specification with at least one claim is not present in the file. Hence, it is clear that the papers for this application were mishandled by the Office. Therefore, it is concluded that 19 pages of application papers including at least one claim were received on July 8, 2005, as shown in counsel's file, and later misplaced in the Office.

The petition is Granted.

Since the original complete specification including at least one claim cannot be located in the Office, the copy of the specification and claims supplied on July 22, 2005, will be used for processing and examination purposes.

The $400.00 petition fee will be refunded to deposit account 12-2150.

It is noted an oath or declaration in response to the Notice has not been submitted. Petitioner is reminded failure to respond to the Notice with the appropriate extension of time fee may result in abandonment.

The application will be returned to the Office of Initial Patent Examination for further processing with a **filing date of July 8, 2003**, using the specification submitted on July 8, 2003 and copy of pages 2-19 of the specification (including at least one claim) supplied on July 22, 2005.

Telephone inquiries related to this decision may be directed to the undersigned at (571) 272-3215.

Charlema R. Grant

Charlema R. Grant
Petition Attorney
Office of Petitions

---

[1]A postcard receipt which itemizes and properly identifies the items which are being filed serves as prima facie evidence of receipt in the office of all items listed thereon. See MPEP 503.

UNITED STATES PATENT AND TRADEMARK OFFICE

UNITED STATES DEPARTMENT OF COMMERCE
United States Patent and Trademark Office
Address: COMMISSIONER FOR PATENTS
P.O. Box 1450
Alexandria, Virginia 22313-1450
www.uspto.gov

CROMPTON, SEAGER & TUFTE, LLC
1221 NICOLLET AVENUE
SUITE 800
MINNEAPOLIS, MN 55403-2420

Mail Date: 04/21/2010

Applicant	: Pu Zhou	: DECISION ON REQUEST FOR
Patent Number	: 7597830	: RECALCULATION of PATENT
Issue Date	: 10/06/2009	: TERM ADJUSTMENT IN VIEW
Appliction No	: 10/615,651	: OF WYETH AND NOTICE OF INTENT TO
Filed	: 07/09/2003	: ISSUE CERTIFICATE OF CORRECTION
		:

The Request for Recalculation is **GRANTED** to the extent indicated.

The patent term adjustment has been determined to be **0** days. The USPTO will *sua sponte* issue a certificate of correction reflecting the amount of PTA days determined by the recalculation.

Prior to the issuance of the certificate of correction, the USPTO will afford patentee an opportunity to be heard and request reconsideration. Accordingly, patentee has **one month or thirty (30) days**, whichever is longer, to file a request for reconsideration of this patent term adjustment calculation. See 35 U.S.C. 154(b)(3)(B)(ii) and 37 CFR 1.322(a)(4). No extensions of time will be granted under 37 CFR 1.136.

Patentee should use document code PET.OP if electronically filing a request for reconsideration of this patent term adjustment calculation. The patentee must also include the information required by 37 CFR 1.705(b)(2) and the fee required by 37 CFR 1.18(e). If patentee does not file a timely request for reconsideration of this patent term adjustment calculation including the information required by 37 CFR 1.705(b)(2) and the fee required by 37 CFR 1.18(e), the USPTO will issue a certificate of correction reflecting the PTA determination noted above.

Patentee should be aware that in order to preserve the right to review in the United States District Court for the District of Columbia of the USPTO patent term adjustment determination, patentee must ensure that he or she also take the steps required under 35 U.S.C. 154(b)(4)(A) in a timely manner. Nothing in the request for recalculation should be construed as providing an alternative time frame for commencing a civil action under 35 U.S.C. 154(b)(4)(A).

Any questions concerning this decision should be directed to the Office of Patent Legal Administration at 571-272-7702.

UNITED STATES PATENT AND TRADEMARK OFFICE

UNITED STATES DEPARTMENT OF COMMERCE
United States Patent and Trademark Office
Address: COMMISSIONER FOR PATENTS
P.O. Box 1450
Alexandria, Virginia 22313-1450
www.uspto.gov

GOODWIN PROCTER LLP
ATTN: PATENT ADMINISTRATOR
620 Eighth Avenue
NEW YORK, NY 10018

Mail Date: 04/20/2010

Applicant	: Jeffrey W. Moe	: DECISION ON REQUEST FOR
Patent Number	: 7588212	: RECALCULATION of PATENT
Issue Date	: 09/15/2009	: TERM ADJUSTMENT IN VIEW
Appliction No	: 10/615,673	: OF WYETH
Filed	: 07/08/2003	:
		:

The Patentee's Request for Recalculation is **DISMISSED.**

This Request is deemed ineligible for consideration for one or more of the following reasons:

(A). The patent for which PTA recalculation is requested is either a design or reissue application or is a reexamination proceeding;

(B). The patent for which PTA recalculation is requested resulted from a utility or plant application filed under 35 USC 111(a) before May 29, 2000 and no CPA filed in the application on/after May 29, 2000;

(C). The patent for which PTA recalculation is requested resulted from an international application in which the international filing date was before May 29, 2000 and no CPA filed in the application on/after May 29, 2000;

(D). The patent for which PTA recalculation is requested issued on/after March 2, 2010;

(E). The Request for Recalculation was filed more than 180 days after the grant date of the patent and the request was not filed within two months of a dismissal of a request for reconsideration of the of the patent term under 37 CFR 1.705(d);

(F). The Request for Recalculation is not solely limited to USPTO pre-Wyeth interpretation of 35 U.S.C. 154(b)(2)(A);

or

(G). A civil action was filed pursuant to 35 U.S.C. 154(b)(4)(A)concerning the same patent at issue in this request.

Patentee may file a reply to this decision dismissing the Request for Recalculation. Patentee must file such reply within one month or thirty days, whichever is longer, of the mail date of the decision dismissing the Request for Recalculation. No fee is required if patentee is asserting in the reply that the dismissal for ineligibility is improper.

Patentee should use document code PET.OP if electronically filing a reply to this dismissal. If the USPTO finds that the request was improperly deemed ineligible, the USPTO will mail applicant a recalculation determination.

Patentee should be aware that in order to preserve the right to review in the United States District Court for the District of Columbia of the USPTO patent term adjustment determination, patentee must ensure that he or she also take the steps required under 35 U.S.C. 154(b)(4)(A). Nothing in the request for recalculation should be construed as providing an alternative time frame for commencing a civil action under 35 U.S.C. 154 (b)(4)(A).

Any questions concerning this decision should be directed to the Office of Patent Legal Administration at 571-272-7702.

UNITED STATES PATENT AND TRADEMARK OFFICE

UNITED STATES DEPARTMENT OF COMMERCE
United States Patent and Trademark Office
Address: COMMISSIONER FOR PATENTS
P.O. Box 1450
Alexandria, Virginia 22313-1450
www.uspto.gov

PEARNE & GORDON LLP
1801 EAST 9TH STREET
SUITE 1200
CLEVELAND, OH 44114-3108

Mail Date: 04/21/2010

Applicant	: Jouji Wada	: DECISION ON REQUEST FOR
Patent Number	: 7616229	: RECALCULATION of PATENT
Issue Date	: 11/10/2009	: TERM ADJUSTMENT IN VIEW
Appliction No	: 10/615,691	: OF WYETH AND NOTICE OF INTENT TO
Filed	: 07/08/2003	: ISSUE CERTIFICATE OF CORRECTION
		:

The Request for Recalculation is **GRANTED** to the extent indicated.

The patent term adjustment has been determined to be **1062** days. The USPTO will *sua sponte* issue a certificate of correction reflecting the amount of PTA days determined by the recalculation.

Prior to the issuance of the certificate of correction, the USPTO will afford patentee an opportunity to be heard and request reconsideration. Accordingly, patentee has **one month or thirty (30) days**, whichever is longer, to file a request for reconsideration of this patent term adjustment calculation. See 35 U.S.C. 154(b)(3)(B)(ii) and 37 CFR 1.322(a)(4). No extensions of time will be granted under 37 CFR 1.136.

Patentee should use document code PET.OP if electronically filing a request for reconsideration of this patent term adjustment calculation. The patentee must also include the information required by 37 CFR 1.705(b)(2) and the fee required by 37 CFR 1.18(e). If patentee does not file a timely request for reconsideration of this patent term adjustment calculation including the information required by 37 CFR 1.705(b)(2) and the fee required by 37 CFR 1.18(e), the USPTO will issue a certificate of correction reflecting the PTA determination noted above.

Patentee should be aware that in order to preserve the right to review in the United States District Court for the District of Columbia of the USPTO patent term adjustment determination, patentee must ensure that he or she also take the steps required under 35 U.S.C. 154(b)(4)(A) in a timely manner. Nothing in the request for recalculation should be construed as providing an alternative time frame for commencing a civil action under 35 U.S.C. 154(b)(4)(A).

Any questions concerning this decision should be directed to the Office of Patent Legal Administration at 571-272-7702.

UNITED STATES PATENT AND TRADEMARK OFFICE

Commissioner for Patents
United States Patent and Trademark Office
P.O. Box 1450
Alexandria, VA 22313-1450
www.uspto.gov

MCDONNELL BOEHNEN HULBERT & BERGHOFF LLP
300 S. WACKER DRIVE
32ND FLOOR
CHICAGO IL 60606

COPY MAILED

APR 11 2005

OFFICE OF PETITIONS

In re Application of
Stephen J. Benkovic et al.
Application No. 10/615,703
Filed: July 9, 2003
Attorney Docket No. 00-387-P

: DECISION REFUSING STATUS
: UNDER 37 CFR 1.47(a)

This decision is in response to the petition filed June 21, 2004, under 37 CFR 1.47(a), in response to the Notice to File Missing Parts "Notice" mailed December 15, 2003.

The petition is **DISMISSED**.

Rule 47 applicant is given TWO MONTHS from the mailing date of this decision to respond, correcting the below-noted deficiencies. Any response should be entitled "Request for Reconsideration of Petition Under 37 CFR 1.47(a)" and may include an oath or declaration executed by the inventor. **Failure to respond will result in abandonment of the application.** Any extensions of time will be governed by 37 CFR 1.136(a).

The above-identified application was filed on July 9, 2003, naming Stephen J. Benkovic, Lucy Shapiro, Rachel Wright, Craig Stephens, Lyn Sue Kahng, Anthony Berdis and Irene Lee but without a signed declaration. Accordingly, on December 15, 2003, a "Notice To File Missing Parts of Application" was mailed, requiring *inter alia* a properly executed oath or declaration.

In response, the present petition was filed with a request for a four month extension of time and the oath and declaration signed by inventors Benkovic, Shapiro, Stephens, Kahng, Berdis and Lee only. Petitioners seek status under 37 CFR 1.47(a) based on the fact that mail sent to Ms. Wright's last known address in the United States was returned as "unclaimed" and further that joint inventor Shapiro has indicated that while she doesn't have an address for Ms. Wright, she knows that she is currently living in New Zealand. Petitioner claims that they have diligently sought to locate Ms. Wright but have been unsuccessful.

A grantable petition under 37 CFR 1.47(a) requires:

(1) proof that the non-signing inventor cannot be reached or refuses to sign the oath or declaration after having been presented with the application papers (specification, claims and drawings);

(2) an acceptable oath or declaration in compliance with 35 U.S.C. §§ 115 and 116;

(3) the petition fee; and

(4) a statement of the last known address of the non-signing inventor.

The present petition lacks item (1).

The evidence presented is not sufficient to show that Ms. Wright cannot be located, since no proof has been presented to that end. If petitioners are satisfied that Ms. Wright no longer lives at the last known address and would like to renew the argument that Ms. Wright cannot be located, petitioners must present a showing that diligent efforts have been made to locate him.[1] Petitioners must however provide details, in an affidavit or declaration of facts by a person with first hand knowledge of the details, of the additional efforts to locate Ms. Wright such as Internet, e-mail, or telephone directory searches, which have been undertaken to locate her. If repeated attempts to contact Ms. Wright by telephone, mail, and e-mail, are unsuccessful, petitioners will have established that she cannot be found despite diligent efforts.

Additionally, the evidence presented indicates that a copy of the filing receipt for the instant application and a combined declaration and power of attorney were mailed to Ms. Wright but it doesn't indicate that the complete application was ever sent to her. If the non-signing inventor is located, petitioner will want to show proof that a copy of the application was sent or given to the non-signing inventors for review by providing a copy of the cover letter transmitting the application papers to the non-signing inventors or details given in an affidavit or declaration of facts by a person having first hand knowledge of the details.

Likewise, before a *bona fide* refusal can be shown, the non-signing inventor must have been given an opportunity to review the application. Therefore, petitioners must show proof that the non-signing inventor refuses to sign the declaration after being sent or given a copy of the application papers. If there is a written refusal, petitioners should submit a copy of that refusal with any renewed petition. If the refusal was made orally to a person, then that person must provide details of the refusal in an affidavit or declaration of facts.

Further correspondence with respect to this matter should be addressed as follows:

By mail: Mail Stop Petitions
Commissioner for Patents
P.O. Box 1450
Alexandria, VA 22313-1450

By FAX: (703) 872-9306
Office of Petitions

Telephone inquiries concerning this matter may be directed to the undersigned Petitions Attorney at (571) 272-3212.

Patricia Faison-Ball

Patricia Faison-Ball
Senior Petitions Attorney
Office of Petitions

---

[1] MPEP 409.03(d).

UNITED STATES PATENT AND TRADEMARK OFFICE

Commissioner for Patents
United States Patent and Trademark Office
P.O. Box 1450
Alexandria, VA 22313-1450
www.uspto.gov

MCDONNELL BOEHNEN HULBERT & BERGHOFF LLP
300 S. WACKER DRIVE
32ND FLOOR
CHICAGO IL 60606

COPY MAILED

JUN 24 2005

OFFICE OF PETITIONS

In re Application of
Stephen J. Benkovic et al.
Application No. 10/615,703
Filed: July 9, 2003
Attorney Docket No. 00-387-P

DECISION ACCORDING STATUS
UNDER 37 CFR 1.47(a)

This decision is in response to the request for reconsideration filed June 16, 2005, (certificate of mail date, June 13, 2005), under 37 CFR 1.47(a), in response to the decision dismissing the petition of June 21, 2004.

The petition is **GRANTED**.

The above-identified application was filed on July 9, 2003, naming Stephen J. Benkovic, Lucy Shapiro, Rachel Wright, Craig Stephens, Lyn Sue Kahng, Anthony Berdis and Irene Lee but without a signed declaration. Accordingly, on December 15, 2003, a "Notice To File Missing Parts of Application" was mailed, requiring *inter alia* a properly executed oath or declaration. In response, a petition was filed with a request for a four month extension of time and the oath and declaration signed by inventors Benkovic, Shapiro, Stephens, Kahng, Berdis and Lee only. Petitioners sought status under 37 CFR 1.47(a) based on the fact that after diligent efforts they have been unable to locate joint inventor Wright. A petition filed June 21, 2004 was dismissed in a decision mailed April 11, 2005 because it hadn't been shown that petitioners diligently sought to locate the non-signing inventor in an attempt to have her execute the oath or declaration.

Comes now petitioner with the instant request for reconsideration.

A grantable petition under 37 CFR 1.47(a) requires:

(1) proof that the non-signing inventor cannot be reached or refuses to sign the oath or declaration after having been presented with the application papers (specification, claims and drawings);

(2) an acceptable oath or declaration in compliance with 35 U.S.C. §§ 115 and 116;

(3) the petition fee; and

(4) a statement of the last known address of the non-signing inventor.

The request for reconsideration bears proof that additional efforts were undertaken to locate the non-signing inventor but those efforts were unsuccessful. The evidence is therefore sufficient to establish diligence as required by the regulation.

As provided in Rule 1.47(c), this Office will forward notice of this application's filing to the non-signing inventor at the address given in the petition. Notice of the filing of this application will also be published in the Official Gazette.

Since the petition fee was paid with the original petition filed June 21, 2004, no additional petition fees for the request for reconsideration are required. Petitioner's deposit account no. 13-2490 will be credited in the amount of $200.00 for the

This matter is being referred to Technology Center 1639 for examination in due course.

Telephone inquiries concerning this matter may be directed to the undersigned Petitions Attorney at (571) 272-3212.

Patricia Faison-Ball

Patricia Faison-Ball
Senior Petitions Attorney
Office of Petitions

UNITED STATES PATENT AND TRADEMARK OFFICE

Commissioner for Patents
United States Patent and Trademark Office
P.O. Box 1450
Alexandria, VA 22313-1450
www.uspto.gov

COPY MAILED
JUN 24 2005
OFFICE OF PETITIONS

RACHEL WRIGHT
1022 MALLETT COURT
MENLO PARK, CA 94025

In re Application of
Stephen J. Benkovic et al.
Reissue Application No. 10/615,703
Filed: July 9, 2003
For: TREATMENT OF BACTERIAL INDUCED DISEASES USING DNA METHYL TRANSFERASE INHIBITORS

Dear Ms. Wright:

You are named as a joint inventor in the above identified United States reissue patent application, filed under the provisions of 35 U.S.C. 116 (United States Code), and 37 CFR 1.47(a), Rules of Practice in Patent Cases. Should a patent be granted on the application you will be designated therein as a joint inventor.

As a named inventor you are entitled to inspect any paper in the file wrapper of the application, order copies of all or any part thereof (at a prepaid cost per 37 CFR 1.19) or make your position of record in the application. Alternatively, you may arrange to do any of the preceding through a registered patent attorney or agent presenting written authorization from you. If you care to join the application, counsel of record (see below) would presumably assist you. Joining in the application would entail the filing of an appropriate oath or declaration by you pursuant to 37 CFR 1.63.

Telephone inquiries regarding this communication should be directed to the undersigned Petitions Attorney at (571) 272-3212. Requests for information regarding your application should be directed to the File Information Unit at 703/308-2733. Information regarding how to pay for and order a copy of the application, or a specific paper in the application, should be directed to Certification Division at 703/308-9726 or 1-800-972-6382 (outside the Washington D.C. area).

Patricia Faison-Ball

Patricia Faison-Ball
Senior Petitions Attorney
Office of Petitions

cc:
MCDONNELL BOEHNEN HULBERT & BERGHOFF LLP
300 S. WACKER DRIVE
32ND FLOOR
CHICAGO IL 60606

UNITED STATES PATENT AND TRADEMARK OFFICE

Commissioner for Patents
United States Patent and Trademark Office
P.O. Box 1450
Alexandria, VA 22313-1450
www.uspto.gov

FOLEY & LARDNER LLP
1530 PAGE MILL ROAD
PALO ALTO, CA 94304

COPY MAILED

MAY 0 8 2006

OFFICE OF PETITIONS

In re Application of
Stephen J. Benkovic et al
Application No. 10/615,703
Filed: July 9, 2003
Attorney Docket No. 00-387-P

DECISION ON PETITION
TO WITHDRAW
FROM RECORD

This is a decision on the Request to Withdraw as attorney or agent of record under 37 C.F.R. § 1.36(b), filed September 27, 2005.

The petition is **NOT APPROVED.**

The request cannot be approved because Office records do not show that the attorneys associated with **Customer No. 38706**, were ever appointed by a power of attorney in the above-identified application.

All future communications from the Office will continue to be directed to the below-listed address of record until otherwise notified by applicant.

This application is being referred to Technology Center AU 1639 to await a reply to the Restriction Requirement mailed February 24, 2006.

Telephone inquiries concerning this decision should be directed to Karen Creasy at 571-272- 3208.

Amelia Au
Petitions Examiner
Office of Petitions

cc:

JEFFRY S. MANN, PHD., J.D.
MORGAN LEWIS AND BOCKIUS
ONE MARKET, SPEAR STREET TOWER
SAN FRANCISCO, CA 94105

(Current address of record below)

MCDONNELL BOEHNEN HULBERT
& BERGHOFF LLP
300 S. WACKER DRIVE
32ND FLOOR
CHICAGO IL 60606

UNITED STATES PATENT AND TRADEMARK OFFICE

Commissioner for Patents
United States Patent and Trademark Office
P.O. Box 1450
Alexandria, VA 22313-1450
www.uspto.gov

MCDONNELL BOEHNEN HULBERT &
BERGHOFF LLP
300 S. WACKER DRIVE
32ND FLOOR
CHICAGO IL 60606

COPY MAILED

DEC 15 2009

OFFICE OF PETITIONS

In re Application of	:	
Stephen J. Benkovic et al	:	
Application No. 10/615,703	:	DECISION DISMISSING PETITIONS
Filed: July 9, 2003	:	UNDER 37 CFR 1.78(a)(3) AND (a)(6)
Attorney Docket No. 00-387-P	:	

This is a decision on the petition filed October 1, 2009 which is being treated under 37 CFR §§ 1.78(a)(3) and 1.78(a)(6), to accept an unintentionally delayed claim under 35 U.S.C. §§ 120 and 119(e) for the benefit of priority to the prior-filed nonprovisional and provisional applications set forth in the concurrently filed amendment.

The petition is **DISMISSED**

A petition for acceptance of a claim for late priority under 37 CFR §§ 1.78(a)(3) and 1.78(a)(6) is only applicable to those applications filed on or after November 29, 2000 and after the expiration of the period specified in 37 CFR §§ 1.78(a)(2)(ii) and 1.78(a)(5)(ii). In addition, the petition under 37 CFR §§ 1.78(a)(3) and 1.78(a)(6) must be accompanied by:

(1) the reference required by 35 U.S.C. §§ 120 and 119(e) and 37 CFR §§ 1.78(a)(2)(i) and 1.78(a)(5)(i) of the prior-filed application, unless previously submitted;

(2) the surcharge set forth in § 1.17(t); and

(3) a statement that the entire delay between the date the claim was due under 37 CFR §§ 1.78(a)(2)(ii) and 1.78(a)(5)(ii) and the date the claim was filed was unintentional. The Director may require additional where there is a question whether the delay was unintentional.

The petition does not comply with item (1).

37 CFR 1.78(a)(2)(i) requires that any nonprovisional application claiming the benefit of one or more prior-filed copending nonprovisional applications must contain or be amended to contain a reference to each such prior-filed application, identifying it by application number (consisting of the series code and serial number) and indicating the relationship of the applications. The relationship between the applications is whether the subject application is a continuation, divisional, or continuation-in-part of a prior-filed nonprovisional application. An example of a proper benefit claim is: "This application is a continuation of Application No. 10/---, filed---." A benefit claim that merely states: "This application claims the benefit of Application No. 10/---, filed---," does not comply with 37 CFR 1.78(a)(2)(i) since the proper relationship, which includes the type of continuing application, is not stated. Also, the status of each nonprovisional parent application (if it is patented or abandoned) should also be indicated, following the filing date of the parent nonprovisional application. *See* MPEP Section 201.11, Reference to Prior Nonprovisional Applications. The amendment fails to comply with the provisions of 37 CFR 1.78(a)(2)(i) and is therefore unacceptable. **The Office is not clear of the relationship of the non-provisional applications mentioned in the amendment to the instant application**.

Additionally, the amendment is not acceptable as drafted since it improperly incorporates by reference the prior-filed applications. An incorporation by reference statement added after an application's filing date is not effective because no new matter can be added to an application after its filing date (*see* 35 U.S.C. § 132(a)). If an incorporation by reference statement is included in an amendment to the specification to add a benefit claim under 35 U.S.C. § 120 after the filing date of the application, the amendment would not be proper. When a benefit claim under 35 U.S.C. § 120 is submitted after the filing of an application, the reference to the prior application cannot include an incorporation by reference statement of the prior application. *See* Dart Industries v. Banner, 636 F.2d 684, 207 USPQ 273 (C.A.D.C. 1980). *Note* MPEP §§ 201.06(c) and 608.04(b).

Before the petition under 37 CFR §§ 1.78(a)(3) and 1.78(a)(6) can be granted, a renewed petition and either an Application Data Sheet or a substitute amendment (complying with the provisions of 37 CFR 1.121 and 37 CFR 1.76(b)(5)) deleting the incorporation by reference statement to Provisional Application No. 60/250,202 and to correct the above matters are required.

Further correspondence with respect to this matter should be delivered through one of the following mediums:

By mail:	Mail Stop PETITIONS Commissioner for Patents Post Office Box 1450 Alexandria, VA 22313-1450
By hand:	Customer Service Window Mail Stop Petitions Randolph Building 401 Dulany Street Alexandria, VA 22314
By fax:	(571) 273-8300 ATTN: Office of Petitions
By internet:	EFS-Web www.uspto.gov/ebc/efs_help.html (for help using EFS-Web call the Patent Electronic Business Center at (866) 217-9197)

Any questions concerning this matter may be directed to the undersigned at (571) 272-3208.

/KOC/
Karen Creasy
Petitions Examiner
Office of Petitions

UNITED STATES PATENT AND TRADEMARK OFFICE

Commissioner for Patents
United States Patent and Trademark Office
P.O. Box 1450
Alexandria, VA 22313-1450
www.uspto.gov

MCDONNELL BOEHNEN HULBERT &
BERGHOFF LLP
300 S. WACKER DRIVE
32ND FLOOR
CHICAGO IL 60606

COPY MAILED
FEB 25 2010

In re Application of	:	
Stephen J. Benkovic et al	:	
Application No. 10/615,703	:	DECISION DISMISSING PETITION
Filed: July 9, 2003	:	UNDER 37 CFR 1.78(a)(3) AND (a)(6)
Attorney Docket No. 00-387-P	:	

This is a decision on the renewed petition filed January 22, 2010, which is being treated under 37 CFR §§ 1.78(a)(3) and 1.78(a)(6), to accept an unintentionally delayed claim under 35 U.S.C. §§ 120 and 119(e) for the benefit of priority to the prior-filed nonprovisional and provisional applications.

The petition is **DISMISSED**

A petition for acceptance of a claim for late priority under 37 CFR §§ 1.78(a)(3) and 1.78(a)(6) is only applicable to those applications filed on or after November 29, 2000 and after the expiration of the period specified in 37 CFR §§ 1.78(a)(2)(ii) and 1.78(a)(5)(ii). In addition, the petition under 37 CFR §§ 1.78(a)(3) and 1.78(a)(6) must be accompanied by:

(1) the reference required by 35 U.S.C. §§ 120 and 119(e) and 37 CFR §§ 1.78(a)(2)(i) and 1.78(a)(5)(i) of the prior-filed application, unless previously submitted;

(2) the surcharge set forth in § 1.17(t); and

(3) a statement that the entire delay between the date the claim was due under 37 CFR §§ 1.78(a)(2)(ii) and 1.78(a)(5)(ii) and the date the claim was filed was unintentional. The Director may require additional where there is a question whether the delay was unintentional.

The petition does not comply with item (1).

The amendment as drafted is unacceptable and, therefore, is not considered a proper reference under 37 CFR 1.78(a)(2)(i) and 1.78(a)(5)(i). **In this regard, the amendment is physically part of the petition and, as such, does not comply with 37 CFR 1.121, 1.52, or 1.4(c). Note that 37 CFR 1.121 states that amendments are made by filing a paper, in compliance with § 1.52, directing that specified amendments be made. The pertinent section of 37 CFR 1.52 states that the claim (in this case, the claim for priority), must commence on a separate physical sheet. 37 CFR 1.4(c) states that each distinct subject must be contained in a separate paper since different matters may be considered by different branches of the United States Patent and Trademark Office.**

Before the petition can be granted, petitioner must submit a substitute amendment in compliance with the aforementioned rules, along with a renewed petition under 37 CFR 1.78(a)(3) and 1.78(a)(6).[1]

Further correspondence with respect to this matter should be delivered through one of the following mediums:

By mail: Mail Stop PETITIONS
Commissioner for Patents
Post Office Box 1450
Alexandria, VA 22313-1450

By hand: Customer Service Window
Mail Stop Petitions
Randolph Building
401 Dulany Street
Alexandria, VA 22314

By fax: (571) 273-8300
ATTN: Office of Petitions

[1] The claim for priority may also be made in an Application Data Sheet in compliance with 37 CFR 1.121 and 37 CFR 1.76(b)(5).

By internet: EFS-Web
www.uspto.gov/ebc/efs_help.html
(for help using EFS-Web call the
Patent Electronic Business Center
at (866) 217-9197)

Any questions concerning this matter may be directed to the undersigned at (571) 272-3208.

/KOC/
Karen Creasy
Petitions Examiner
Office of Petitions

UNITED STATES PATENT AND TRADEMARK OFFICE

Commissioner for Patents
United States Patent and Trademark Office
P.O. Box 1450
Alexandria, VA 22313-1450
www.uspto.gov

DANN DORFMAN HERRELL & SKILLMAN
1601 MARKET STREET, SUITE 2400
PHILADELPHIA, PA 19103-2307

COPY MAILED

MAY 1 9 2004

OFFICE OF PETITIONS

In re Application of	:
Wesley Scott et al	: DECISION ACCORDING STATUS
Application No. 10/615,704	: UNDER 37 CFR 1.47(b)
Filed: July 9, 2003	:
For: SYSTEM AND METHOD FOR BENDING	:
STRIP MATERIAL TO CREATE CUTTING	:
DIES	:

This is in response to the petition under 37 CFR 1.47(a), filed March 4, 2004 and supplemented on April 30, 2004.

The petition is granted.

Petitioner has shown that the non-signing inventor has refused to join in the filing of the above-identified application.

The above-identified application and papers have been reviewed and found in compliance with 37 CFR 1.47(a). This application is hereby accorded Rule 1.47(a) status. As provided in Rule 1.47(c), this Office will forward notice of this application's filing to the non-signing inventor at the address given in the petition. Notice of the filing of this application will also be published in the Official Gazette.

Telephone inquiries regarding this decision should be directed to Petitions Examiner Wan Laymon at (703) 306-5685.

This application file is being referred to the Office of Initial Patent Examination for preexamination processing.

Frances Hicks
Lead Petitions Examiner
Office of Petitions
Office of the Deputy Commissioner
for Patent Examination Policy

UNITED STATES PATENT AND TRADEMARK OFFICE

Commissioner for Patents
United States Patent and Trademark Office
P.O. Box 1450
Alexandria, VA 22313-1450
www.uspto.gov

CHERNOFF VILHAUER MCCLUNG & STENZEL, L.L.P.
1600 ODS TOWER
601 SW SECOND AVENUE
PORTLAND OR 97204-3157

COPY MAILED

JAN 12 2007

OFFICE OF PETITIONS

In re Application of
Dale Pestes et al.
Application No. 10/615,712
Filed: July 8, 2003
Attorney Docket No.: CDM:3912.9999

ON PETITION

This is a decision on the petition filed July 13, 2006 under 37 CFR 1.137(b),[1] to revive the above-identified application.

The petition is **GRANTED**.

This application became abandoned for failure to timely reply to the non-Final Office Action mailed December 9, 2005. A shortened statutory period of three months was set for replying to the non-Final Office Action. No extensions of time having been requested, this application became abandoned March 10, 2006. Accordingly, the Notice of Abandonment was mailed July 13, 2006.

The petition fee in the amount of $750.00 has been applied.

This matter is being referred to Technology Center 3736 for appropriate action on the amendment filed July 13, 2006.

Telephone inquiries concerning this matter should be directed to the undersigned Petitions Attorney at (571) 272-3212.

Patricia Faison-Ball
Senior Petitions Attorney
Office of Petitions

---

[1] Effective December 1, 1997, the provisions of 37 CFR 1.137(b) now provide that where the delay in reply was unintentional, a petition may be filed to revive an abandoned application or a lapsed patent pursuant to 37 CFR 1.137(b). A grantable petition filed under the provisions of 37 CFR 1.137(b) must be accompanied by:

(1) the required reply, unless previously filed. In a nonprovisional application abandoned for failure to prosecute, the required reply may be met by the filing of a continuing application. In a nonprovisional application filed on or after June 8, 1995, and abandoned for failure to prosecute, the required reply may also be met by the filing of a request for continued examination in compliance with § 1.114. In an application or patent, abandoned or lapsed for failure to pay the issue fee or any portion thereof, the required reply must be the payment of the issue fee or any outstanding balance thereof. In an application abandoned for failure to pay the publication fee, the required reply must include payment of the publication fee.

(2) the petition fee as set forth in 37 CFR 1.17(m);

(3) a statement that the entire delay in filing the required reply from the due date for the reply until the filing of a grantable petition pursuant to 37 CFR 1.137(b) was unintentional. The Commissioner may required additional information where there is a question whether the delay was unintentional; and

(4) any terminal disclaimer (and fee as set forth in 37 CFR 1.20(d)) required pursuant to 37 CFR 1.137(c)).

UNITED STATES PATENT AND TRADEMARK OFFICE

Commissioner for Patents
United States Patent and Trademark Office
P.O. Box 1450
Alexandria, VA 22313-1450
www.uspto.gov

DARBY & DARBY
P.O. BOX 5257
NEW YORK, NY 10150-5257

COPY MAILED

JUL 2 0 2005

OFFICE OF PETITIONS

In re Application of :
Mladen Mercep et al :
Application No. 10/615,716 :
Filed: July 8, 2003 :
Attorney Docket No. 3818/1L650-US1 :

ON PETITION

This is a decision on the petition, filed July 19, 2005, under 37 CFR 1.313(c)(2) to withdraw the above-identified application from issue after payment of the issue fee.

The petition is **GRANTED.**

The above-identified application is withdrawn from issue for consideration of a submission under 37 CFR 1.114 (request for continued examination). See 37 CFR 1.313(c)(2).

Petitioner is advised that the issue fee paid on June 30, 2005 in the above-identified application cannot be refunded. If, however, the above-identified application is again allowed, petitioner may request that it be applied towards the issue fee required by the new Notice of Allowance.[1]

Telephone inquiries should be directed to the undersigned at (571) 272-3208.

The examiner of Technology Center AU 1623 will consider the request for continued examination under 37 CFR 1.114.

Karen Creasy
Petitions Examiner
Office of Petitions
Office of the Deputy Commissioner
for Patent Examination Policy

---

[1] The request to apply the issue fee to the new Notice may be satisfied by completing and returning the new Issue Fee Transmittal Form PTOL-85(b), which includes the following language thereon: "Commissioner for Patents is requested to apply the Issue Fee and Publication Fee (if any) or re-apply any previously paid issue fee to the application identified above." Petitioner is advised that, whether a fee is indicated as being due or not, the Issue Fee Transmittal Form **must** be completed and timely submitted to avoid abandonment. Note the language in bold text on the first page of the Notice of Allowance and Fee(s) Due (PTOL-85).

UNITED STATES PATENT AND TRADEMARK OFFICE

Commissioner for Patents
United States Patent and Trademark Office
P.O. Box 1450
Alexandria, VA 22313-1450
www.uspto.gov

GREENBERG TRAURIG, LLP
200 PARK AVE.
P.O. BOX 677
FLORHAM PARK NJ 07932

COPY MAILED

DEC 3 1 2007

OFFICE OF PETITIONS

In re Patent No. 6,953,136 :
Issue Date: October 11, 2005 :
Application No. 10/615, 717 : DECISION ON PETITION
Filed: July 9, 2003 :
Attorney Docket No. 103513-010702 :

This is a decision on the petition under 37 CFR 1.182, filed August 17, 2007, requesting issuance of a duplicate Letters Patent for the above-identified patent.

The petition is **GRANTED**.

The Publishing Division is directed to issue a duplicate Letters Patent.

As authorized, the $400 fee for the petition under 37 CFR 1.182 has been assessed to petitioner's deposit account.

Telephone inquiries concerning this decision may be directed to the undersigned at (571) 272-3215. Inquiries regarding the issuance of a duplicate Letters Patent may be directed to Krystal Paige in the Publishing Division at (703) 308-9250, Ext. 139.

A copy of this decision is being faxed to Publishing Division for issuance of a duplicate Letters Patent.

Charlema Grant
Petitions Attorney
Office of Petitions

cc: Krystal Paige, South Tower, 8th Floor, Room C32 (Fax No. (571) 270-9937)

UNITED STATES PATENT AND TRADEMARK OFFICE

Commissioner for Patents
United States Patent and Trademark Office
P.O. Box 1450
Alexandria, VA 22313-1450
www.uspto.gov

ROPES & GRAY, LLP
PATENT DOCKETING 36/361
1211 AVENUE OF THE AMERICAS
NEW YORK, NY 10036-8704

COPY MAILED

OCT 14 2008

OFFICE OF PETITIONS

In re Application of	:	
Howard W. Lutnick, et al.	:	
Application No. 10/615,721	:	DECISION ON PETITION
Filed: July 8, 2003	:	TO WITHDRAW
Attorney Docket No. CF/082	:	FROM RECORD
	:	

This is a decision on the Request to Withdraw as attorney or agent of record under 37 C.F.R. § 1.36(b), filed February 19, 2008.

The request is **DISMISSED** as moot.

A review of the file record indicates that the power of attorney to Ropes & Gray, LLP has been revoked by the assignee of the patent application on April 22, 2008. Accordingly, the request to withdraw under 37 C.F.R. § 1.36(b) is moot.

All future communications from the Office will continue to be directed to the below-listed address until otherwise notified by applicant.

Telephone inquires concerning this decision should be directed to undersigned at 571-272- 1642.

/April M. Wise/
April M. Wise
Petitions Examiner
Office of Petitions

cc: DEAN P. ALDERUCCI
CANTOR FITZGERALD, LP
110 EAST 59TH STREET
6TH FLOOR
NEW YORK, NY 10022

SPE RESPONSE FOR CERTIFICATE OF CORRECTION

DATE : 6-3-04

Paper No.: _____

TO SPE OF : ART UNIT 1647

SUBJECT : Request for Certificate of Correction for Appl. No.: 10/615423 Patent No.: 7235232

Please respond to this request for a certificate of correction within 7 days.

FOR IFW FILES: Check spa/ sequence listing

Please review the requested changes/corrections as shown in the **COCIN** document(s) in the IFW application image. No new matter should be introduced, nor should the scope or meaning of the claims be changed.

Please complete the response (see below) and forward the completed response to scanning using document code **COCX**.

FOR PAPER FILES:

Please review the requested changes/corrections as shown in the attached certificate of correction. Please complete this form (see below) and forward it with the file to:

Certificates of Correction Branch (C of C)
Randolph Square 9C62-D
Palm Location 7580

Ennis Young
Certificates of Correction Branch
703-756-1542

Thank You For Your Assistance

The request for issuing the above-identified correction(s) is hereby:
Note your decision on the appropriate box.

- ☑ **Approved** — **All** changes apply.
- ☐ **Approved in Part** — Specify below which changes **do not** apply.
- ☐ **Denied** — State the reasons for denial below.

Comments: _____

SPE

1646/1647
Art Unit

UNITED STATES PATENT AND TRADEMARK OFFICE

Commissioner for Patents
United States Patent and Trademark Office
P.O. Box 1450
Alexandria, VA 22313-1450
www.uspto.gov

WILSON SONSINI GOODRICH & ROSATI
650 PAGE MILL ROAD
PALO ALTO CA 94304-1050

COPY MAILED

APR 1 1 2007

OFFICE OF PETITIONS

In re Application of	:	
Mark A. **REILEY**	:	
Application No. 10/615,727	:	DECISION ON PETITION
Filed: July 9, 2003	:	TO WITHDRAW
Attorney Docket No. **9448.17205-CIP DIV**	:	FROM RECORD
	:	

This is a decision on the Request to Withdraw as attorney or agent of record under 37 C.F.R. § 1.36(b), filed December 8, 2006.

The request is **NOT APPROVED** as moot.

A review of the file record indicates that the power of attorney to Cecily A. O'Regan of WILSON SONSINI GOODRICH & ROSATI has been revoked by the assignee of the patent application on January 8, 2007. Accordingly, the request to withdraw under 37 C.F.R. § 1.36(b) is moot.

All future communications from the Office will continue to be directed to the below-listed address until otherwise notified by applicant.

Telephone inquires concerning this decision should be directed to the undersigned at 571-272-7253.

Monica A. Graves
Petitions Examiner
Office of Petitions

cc: **SHADY LAW GROUP LLP**
2755 CAMPUS DRIVE, SUITE 210
SAN MATEO, CA 94403

OIPE IAP28
SEP 14 2005
PATENT & TRADEMARK OFFICE

APPROVED 11/13/04

DAW

PTO/SB/83 (04-05)
Approved for use through 11/30/2005. OMB 0651-0035
U.S. Patent and Trademark Office, U.S. DEPARTMENT OF COMMERCE

Under the Paperwork Reduction Act of 1995, no persons are required to respond to a collection of information unless it displays a valid OMB control number.

REQUEST FOR WITHDRAWAL AS ATTORNEY OR AGENT AND CHANGE OF CORRESPONDENCE ADDRESS

Application Number	10/615,762
Filing Date	July 9, 2003
First Named Inventor	Terry M. Howley
Art Unit	3643
Examiner Name	Kurt C. Rowan
Attorney Docket Number	

To: Commissioner for Patents
P.O. Box 1450
Alexandria, VA 22313-1450

Please withdraw me as attorney or agent for the above identified patent application, and

[X] all the attorneys/agents of record.

[ ] the attorneys/agents (with registration numbers) listed on the attached paper(s), or

[ ] the attorneys/agents associated with Customer Number [ ]

NOTE: This box can only be checked when the power of attorney of record in the application is to all the practitioners associated with a customer number.

The reasons for this request are: In a personal conference on September 12, 2005 applicant informed the undersigned attorney of applicant's decision to obtain substitute counsel.

CORRESPONDENCE ADDRESS

1. [ ] The correspondence address is NOT affected by this withdrawal.
2. [X] Change the correspondence address and direct all future correspondence to:

[ ] The address associated with Customer Number: [ ]

OR

[X] Firm *or* Individual Name	Terry M. Howley		
Address	4106 Wilder Road, No. 288		
City	Bay City	State Michigan	Zip 48706
Country	U.S.A.		
Telephone		Email	
Signature	John K. McCulloch		
Name	John K. McCulloch	Registration No. 17,452	
Date	September 12, 2005	Telephone No. 989-792-2500	

NOTE: Withdrawal is effective when approved rather than when received. Unless there are at least 30 days between approval of withdrawal and the expiration date of a time period for response or possible extension period, the request to withdraw is normally disapproved.

This collection of information is required by 37 CFR 1.36. The information is required to obtain or retain a benefit by the public which is to file (and by the USPTO to process) an application. Confidentiality is governed by 35 U.S.C. 122 and 37 CFR 1.11 and 1.14. This collection is estimated to take 12 minutes to complete, including gathering, preparing, and submitting the completed application form to the USPTO. Time will vary depending upon the individual case. Any comments on the amount of time you require to complete this form and/or suggestions for reducing this burden, should be sent to the Chief Information Officer, U.S. Patent and Trademark Office, U.S. Department of Commerce, P.O. Box 1450, Alexandria, VA 22313-1450. DO NOT SEND FEES OR COMPLETED FORMS TO THIS ADDRESS. SEND TO: **Commissioner for Patents, P.O. Box 1450, Alexandria, VA 22313-1450.**

If you need assistance in completing the form, call 1-800-PTO-9199 and select option 2.

UNITED STATES PATENT AND TRADEMARK OFFICE

Commissioner for Patents
United States Patent and Trademark Office
P.O. Box 1450
Alexandria, VA 22313-1450
www.uspto.gov

Paper No.

TERRY M. HOWLEY
4106 WILDER ROAD, NO. 288
BAY CITY MI 48706

COPY MAILED

OCT 26 2007

OFFICE OF PETITIONS

In re Application of	:	
Terry Howley	:	DECISION ON PETITION
Application No. 10/615,762	:	
Filed: July 9, 2003	:	
Title: FISHING ROD REST	:	

This is a decision on the PETITION TO WITHDRAW HOLDING OF ABANDONMENT:NON-FEE ISSUE filed July 17, 2007. This decision has been made in light of the letters filed January 29, 2007, and February 1, 2007.

The petition under § 1.181 is **DISMISSED**.

Any request for reconsideration must be submitted within TWO (2) MONTHS from the mail date of this decision. Extensions of time under 37 C.F.R. §1.136(a) are not permitted. See 1.181(f).

Alternatively, applicant may seek revival under the provisions of 37 CFR 1.137. Such a request should include a cover letter entitled "Petition under 37 C.F.R. § 1.137(a)" or "Petition under 37 C.F.R. § 1.137(b)," as appropriate.

The above-identified application became abandoned for failure to file a reply to the non-final Office action mailed June 1, 2006[1]. This Office action set a shortened statutory period for reply of three (3) months, with extensions of time obtainable under

[1] The Office action was originally mailed on March 21, 2006. The Office action was returned to the Office by the withdrawn attorney. The Office action was then mailed to the sole inventor with a new period for response set.

§ 1.136(a). No reply timely filed and no extension of time obtained, the application became abandoned effective September 2, 2006[2]. A courtesy Notice of Abandonment was mailed on December 29, 2006.

MPEP 711.03 provides that:

> When advised of the abandonment of his or her application, applicant may either ask for reconsideration of such holding, if he or she disagrees with it on the basis that there is no abandonment in fact; or petition for revival under 37 CFR 1.137. When an amendment reaches the U.S. Patent and Trademark Office after the expiration of the period for reply and there is no dispute as to the dates involved, no question of reconsideration of a holding of abandonment can be presented.

Further,

> A petition to revive an abandoned application (discussed below) should not be confused with a petition from an examiner's holding of abandonment. Where an applicant contends that the application is not in fact abandoned (e.g., there is disagreement as to the sufficiency of the reply, or as to controlling dates), a petition under 37 CFR 1.181(a) requesting withdrawal of the holding of abandonment is the appropriate course of action, and such petition does not require a fee. Where there is no dispute as to whether an application is abandoned (e.g., the applicant's contentions merely involve the cause of abandonment), a petition under 37 CFR 1.137 (accompanied by the appropriate petition fee) is necessary to revive the abandoned application.

In this instance, petitioner disputes the abandonment of the application but there is no dispute that no response was filed. Applicant does not allege that a response was timely filed. Moreover, a review of the application record confirms that no response to the Office action was timely received. As such, the application is in fact abandonment. Accordingly, a petition under 37 CFR 1.137 (accompanied by the appropriate fee) is

---

[2] A letter dated May 25, 2006 was filed on August 24, 2006 but it was not responsive to the Office action mailed June 1, 2006.

necessary to revive this abandoned application (and continue prosecution).

The provisions of 37 CFR 1.137 provide for Revival of abandoned application, terminated re-examination proceeding, or lapsed patent, as follows:

> (a) Unavoidable. If the delay in reply by applicant or patent owner was unavoidable, a petition may be filed pursuant to this paragraph to revive an abandoned application, a re-examination proceeding terminated under §§ 1.550(d) or 1.957(b) or (c), or a lapsed patent. A grantable petition pursuant to this paragraph must be accompanied by:
> (1) The reply required to the outstanding Office action or notice, unless previously filed;
> (2) The petition fee as set forth in § 1.17(l);
> (3) A showing to the satisfaction of the Director that the entire delay in filing the required reply from the due date for the reply until the filing of a grantable petition pursuant to this paragraph was unavoidable; and
> (4) Any terminal disclaimer (and fee as set forth in § 1.20(d)) required pursuant to paragraph (d) of this section.
>
> (b) Unintentional. If the delay in reply by applicant or patent owner was unintentional, a petition may be filed pursuant to this paragraph to revive an abandoned application, a re-examination proceeding terminated under §§ 1.550(d) or 1.957(b) or (c), or a lapsed patent. A grantable petition pursuant to this paragraph must be accompanied by:
> (1) The reply required to the outstanding Office action or notice, unless previously filed;
> (2) The petition fee as set forth in § 1.17(m);
> (3) A statement that the entire delay in filing the required reply from the due date for the reply until the filing of a grantable petition pursuant to this paragraph was unintentional. The Director may require additional information where there is a question whether the delay was unintentional; and
> (4) Any terminal disclaimer (and fee as set forth in § 1.20(d)) required pursuant to paragraph (d) of this section.

Receipt of the replies to the Office action filed August 13 and 17, 2007 is acknowledged. However, the examiner may not consider these replies until the application is revived.

The petition fee for revival based on unavoidable delay is $255 for a small entity and based on unintentional delay is $770 for a small entity. Petitions under 37 CFR 1.137(b) are less burdensome (statement(s) rather than a showing accompanied by documentary evidence) to file and are evaluated under the less stringent "unintentional delay" standard.

Further correspondence with respect to this decision should be addressed as follows:

By mail: Mail Stop Petition
Commissioner for Patents
P.O. Box 1450
Alexandria, VA 22313-1450

By fax: (571) 273-8300
ATTN: Office of Petitions

By hand: Customer Service Window
Randolph Building
401 Dulany Street
Alexandria, VA 22314

Telephone inquiries concerning this decision should be directed to the undersigned at (571) 272-3219.

Nancy Johnson
Senior Petitions Attorney
Office of Petitions

UNITED STATES PATENT AND TRADEMARK OFFICE

Commissioner for Patents
United States Patent and Trademark Office
P.O. Box 1450
Alexandria, VA 22313-1450
www.uspto.gov

Paper No.

TERRY M. HOWLEY
4106 WILDER ROAD, NO. 288
BAY CITY MI 48706

COPY MAILED
FEB 05 2008
OFFICE OF PETITIONS

In re Application of :
Terry Howley : DECISION ON PETITION
Application No. 10/615,762 :
Filed: July 9, 2003 :
Title: FISHING ROD REST :

This is a decision on the PETITION FOR REVIVAL OF AN APPLICATION FOR PATENT ABANDONED UNINTENTIONALLY UNDER 37 CFR 1.137(b) filed December 26, 2007.

The petition is **GRANTED**.

The above-identified application became abandoned effective September 2, 2006[1] for failure to file a reply to the non-final Office action mailed June 1, 2006[2]. A courtesy Notice of Abandonment was mailed on December 29, 2006. By decision mailed October 26, 2007, the initial PETITION TO WITHDRAW HOLDING OF ABANDONMENT:NON-FEE ISSUE filed July 17, 2007 was dismissed.

In response, applicant timely filed the instant petition to revive. The petition includes the statement of unintentional delay, as well as an explanation of the circumstances of the abandonment, and payment of the petition fee. The reply required to revive the application in the form of an amendment

[1] A letter dated May 25, 2006 was filed on August 24, 2006 but it was not responsive to the Office action mailed June 1, 2006.
[2] The Office action was originally mailed on March 21, 2006. The Office action was returned to the Office by the withdrawn attorney. The Office action was then mailed to the sole inventor with a new period for response set.

was previously filed on August 13, 2007. No terminal disclaimer is required.

Technology Center AU 3643 has been advised of this decision. The application is, thereby, forwarded for consideration by the examiner of the amendment filed August 13, 2007.

Telephone inquiries concerning this decision should be directed to the undersigned at (571) 272-3219.

Nancy Johnson
Senior Petitions Attorney
Office of Petitions

UNITED STATES PATENT AND TRADEMARK OFFICE

Commissioner for Patents
United States Patent and Trademark Office
P.O. Box 1450
Alexandria, VA 22313-1450
www.uspto.gov

KEIL & WEINKAUF
1350 CONNECTICUT AVENUE, N.W.
WASHINGTON, DC 20036

COPY MAILED

DEC 0 9 2004

OFFICE OF PETITIONS

In re Application of :
Diener et al. :
Application No. 10/615,771 :
Filed: July 10, 2003 :
Attorney Docket No. PF51471-02 :

ON PETITION

This is a decision in response to the papers filed September 13, 2004, which are being treated as a petition requesting, in effect, that pages 3 and 11 filed on September 13, 2004, be entered as part of the original disclosure.

The petition is **dismissed**.

The application was filed on July 10, 2004.

On September 13, 2004, the Office of Initial Patent Examination mailed a "Notice of Omitted Item(s)" stating that the application had been accorded a filing date of July 10, 2003, and advising applicants that pages 3 and 11 of the specification appeared to have been omitted.

In response, the present "petition" was filed. Petitioner has filed a copy of pages 3 and 11 of the specification. However, petitioner has not alleged the missing pages were filed on July 10, 2003, and has supplied no evidence the papers were filed on July 10, 2003. Therefore, the pages cannot be entered.

As a courtesy, the Office notes the transmittal letter appears to include language incorporating by reference the content of the parent application.

The Office allows an applicant to rely upon an incorporation by reference of a parent application when a portion of the child application has been inadvertently omitted. MPEP 201.06(c) states that:

> . . . an applicant may incorporate by reference the prior application by including, in the application-as-filed, a statement that such specifically enumerated prior application or applications are "hereby incorporated herein by reference." The statement may appear in the specification or in the application transmittal letter. The inclusion of this incorporation by reference of the prior application(s) will permit an applicant to amend the continuing application to include any subject matter in such prior application(s), without the need for a petition provided the continuation or divisional application is entitled to a filing date notwithstanding the incorporation by reference. . . .
>
> If a continuation or divisional application as originally filed is entitled to a filing date despite the omission of a portion of the prior application(s), applicant will be permitted to add the omitted material by way of an amendment provided a statement was included in the application as originally filed that incorporates by reference the prior application(s). If the application as originally filed includes a proper incorporation by reference of the prior application(s), an omitted specification page(s) and/or drawing figure(s) identified in a "Notice of Omitted Item(s)" may be added by amendment provided the omitted item(s)

contains only subject matter in common with such prior application(s). In such case, applicant need not respond to the "Notice of Omitted Item(s)." Applicant should submit the amendment adding the omitted material prior to the first Office action to avoid delays in the prosecution of the application. See MPEP § 601.01(d) and § 601.01(g).

An amendment to the specification deleting references to the missing pages should be filed prior to the first USPTO action in order to avoid further delays in the examination of the application. *In the alternative*, if petitioner desires for the examiner to consider pages which were not submitted as part of the original disclosure, then petitioner may seek to submit some or all of those pages as an amendment. Any such amendment will, of course, be reviewed by the examiner for new matter. See MPEP 608.02(a).

The pages submitted with the petition will not be entered. Should petitioner wish for the pages to be entered, an amendment must be filed.

The original application papers will include only those application papers present on the date of deposit.

Since the present petition was not necessitated by any error on the part of the Office, the $130.00 petition fee will not be refunded.

The Office of Initial Patent Examination will be informed of the instant decision.

Telephone inquiries should be directed to Petitions Attorney Steven Brantley at (571) 272-3203.

Charles Steven Brantley
Senior Petitions Attorney
Office of Petitions

UNITED STATES PATENT AND TRADEMARK OFFICE

Commissioner for Patents
United States Patent and Trademark Office
P.O. Box 1450
Alexandria, VA 22313-1450
www.uspto.gov

OBLON, SPIVAK, MCCLELLAND MAIER & NEUSTADT, P.C.
1940 DUKE STREET
ALEXANDRIA VA 22314

COPY MAILED

APR 29 2008

OFFICE OF PETITIONS

In re Application of
Noriyuki Nakanishi
Application No. 10/615,780
Filed: July 10, 2003
Attorney Docket No. 240114US90

DECISION GRANTING PETITION
UNDER 37 CFR 1.313(c)(2)

This is a decision on the petition under 37 CFR 1.313(c)(2), filed April 28, 2008, to withdraw the above-identified application from issue after payment of the issue fee.

The petition is **GRANTED**.

The above-identified application is withdrawn from issue for consideration of a submission under 37 CFR 1.114 (request for continued examination). *See* 37 CFR 1.313(c)(2).

Petitioner is advised that the issue fee paid on April 16, 2008 cannot be refunded. If, however, this application is again allowed, petitioner may request that it be applied towards the issue fee required by the new Notice of Allowance.[1]

Telephone inquiries should be directed to the undersigned at (571) 272-3208.

This application is being referred to Technology Center AU 1611 for processing of the request for continued examination under 37 CFR 1.114 and for consideration of the concurrently filed RCE.

Karen Creasy
Petitions Examiner
Office of Petitions

[1] *The request to apply the issue fee to the new Notice may be satisfied by completing and returning the new Part B – Fee(s) Transmittal Form (along with any balance due at the time of submission). Petitioner is advised that the Issue Fee Transmittal Form* ***must*** *be completed and timely submitted to avoid abandonment of the application.*

UNITED STATES PATENT AND TRADEMARK OFFICE

COMMISSIONER FOR PATENTS
UNITED STATES PATENT AND TRADEMARK OFFICE
P.O. BOX 1450
ALEXANDRIA, VA 22313-1450
www.uspto.gov

Paper No.

WENDEROTH, LIND & PONACK, L.L.P.
2033 K STREET N.W.
SUITE 800
WASHINGTON DC 20006-1021

APR 13 2003

In re Application of:
Shigeru Furumiya et al
Serial No.: 10/615,799
Filed: July 10, 2003
Attorney Docket No.: **2003-0615**

NOTICE OF WITHDRAWAL
FROM ISSUE
UNDER 37 CFR § 1.313

The purpose of this communication is to inform you that the above-identified application is being withdrawn from issue pursuant to 37 CFR § 1.313.

The above-identified application is hereby withdrawn from issue. The Notice of Allowance and Issue Fee Due and the Notice of Allowability mailed December 24, 2003, are hereby vacated.

The application is being withdrawn to permit reopening of prosecution. The reasons therefor will be communicated to you by the examiner.

Upon receipt of a new Notice of Allowance and Issue Fee Due, applicant may request that any previously submitted issue fee be applied toward payment of the issue fee in the amount identified on the new Notice of Allowance and Issue Fee Due. If the application is abandoned, applicant may request either a refund, or a credit to a Deposit Account.

Telephone inquires should be directed to Paula Bradley at (571) 272-2001.

The above-identified application is being forwarded to the examiner for prompt appropriate action.

Richard K. Seidel, Director
Technology Center 2800
Semiconductors, Electrical and Optical
Systems and Components

UNITED STATES PATENT AND TRADEMARK OFFICE

Commissioner for Patents
United States Patent and Trademark Office
P.O. Box 1450
Alexandria, VA 22313-1450
www.uspto.gov

MAR 16 2007

AMGEN, INC.
1120 VETERANS BOULEVARD
SOUTH SAN FRANCISCO, CA 94080

In re Application of	:
Qi Huang et al	:
Serial No.: 10/615,809	: PETITION DECISION
Filed: July 8, 2003	:
Attorney Docket No.: A-817	:

This is in response to the petition under 37 CFR 1.181, filed January 19, 2007, requesting withdrawal of the Finality of the Office action mailed November 14, 2006.

BACKGROUND

A review of the file history shows that the examiner mailed a first Office action to applicants on December 7, 2005, setting forth a two way restriction requirement and an election of species requirement.

Applicants replied on February 27, 2006, by electing Group I and a species without traverse.

The examiner mailed a new Office action to applicants on April 13, 2006, acknowledging the election without traverse and the species elected. The examiner then, based on the species elected, arbitrarily determined the scope of the claims to be examined by defining variables R and R^3. The examiner then rejected claim 1 under 35 U.S.C. 102(b) as anticipated by Lockermann et al. Claims 1-4, 8, 10-12, 16-17, 19, 23-25, 29 and 36 were rejected under 35 U.S.C. 102(b) over Huth et al (WO 00/27819). Claims 1-12, 16-17, 19, 23-25, 29-30, 32, 34 and 36 were rejected under 35 U.S.C. 103(a) as unpatentable over Altmann et al and the same claims were rejected for obvious double patenting over Altmann et al.

Applicants replied on August 22, 2006, amending claims 1-2, 5, 9, 17, 19-20 and 30 and canceling claims 4, 8, 12-16, 18 25-27 and 33. Applicants replied to all of the grounds of rejection asserted, and further objected to the examiner's determination of the scope of the claims to be examined as being improper.

The examiner mailed a Final Office action to applicants on November 14, 2006. The examiner withdrew all of the previous rejections of record in view of applicants' amendments. The examiner objected to claims 3 and 9 as failing to further limit the claim from which they depended. Claims 1-3, 5-7, 9-11, 17, 19-20, 22, 24, 29-32, 34 and 36 were objected to as containing non-elected subject matter. Claims 1-3, 10-11, 17, 19-20, 23-24, 29 and 36 were then rejected under 35 U.S.C. 102(b) as anticipated by Huth et al (WO 00/27819). Claims 5-7 and 9

were rejected under 35 U.S.C. 102(b) as anticipated, or under 35 U.S.C. 103(a) as unpatentable, over Huth et al (WO 00/27819), Patani et al or Fotouhi et al. Claims 30 and 34 were also rejected under 35 U.S.C. 103(a) as unpatentable over Huth et al in view of Patani et al and claim 31 was rejected under 35 U.S.C. 103(a) as unpatentable over Huth et al in view of Patani et al and Fotouhi et al.

Applicants filed this petition on January 19, 2007, objecting to the finality of the Office action as premature. Applicants also filed a reply to the Final Office action concurrently and have since filed a Notice of Appeal on February 14, 2007.

DISCUSSION

Applicants request withdrawal of the finality of the Office action of November 14, 2006, on the basis that the examiner's determination of the scope of the claims is improper and raises questions as to what is being examined inasmuch as the limitation imposed on one variable does not appear in the specification.

Applicants note that in the restriction requirement the examiner required an election of species and stated that upon electing a species the Office (i.e. – the examiner) would review the claims and disclosure to determine the scope of the independent invention encompassing the elected compound. The Office action further stated that the restriction requirement would not be made Final until applicant was informed of the full scope of the invention under examination. Applicants did not comment on these statements in response to the restriction requirement, but did object to the examiner's determination of the scope of the invention to be examined after receiving the next Office action which limited the scope of the claims. In addition, applicants clearly stated that the limitation of the claims introduced by the examiner was not supported by the specification and, in fact, encompassed embodiments excluded by the specification.

A review of the claims and the examiner's actions show the above to be partially correct. The examiner's statement which appears to set a limit on the scope of the claims to be examined was meant to inform applicants of the scope of the search pertaining to the claims, not limit the claim scope.

Further, the argument that the examiner's limitation that R^3 is a 6-membered ring consisting only of carbon and nitrogen may be inconsistent with the specification which defines R^3 as a 5 or 6-membered heterocyclyl ring meaning it cannot be an all carbon ring misconstrues the examiner's statement. It appears that the examiner intended the phrase to mean "six-membered nitrogen heterocycle ring", which is consistent with the elected species and prior art applied.

In view of the above the examiner's action in making the last Office action Final was not improper.

DECISION

The petition is **DENIED.**

The application will be forwarded to the examiner for consideration of applicants' reply to the Final Office action mailed November 14, 2007.

The time for filing an Appeal Brief or taking other appropriate action in response to the Notice of Appeal filed February 14, 2007, continues to run from that date and may be extended under 37 CFR 1.136(a).

Should there be any questions about this decision please contact William R. Dixon, Jr., by letter addressed to Director, TC 1600, at the address listed above, or by telephone at 571-272-0519 or by facsimile sent to the general Office facsimile number 571-273-8300.

George C. Elliott

George C. Elliott
Director, Technology Center 1600

UNITED STATES PATENT AND TRADEMARK OFFICE

COMMISSIONER FOR PATENTS
UNITED STATES PATENT AND TRADEMARK OFFICE
P.O. BOX 1450
ALEXANDRIA, VA 22313-1450
www.uspto.gov

FOLEY & LARDNER LLP
150 EAST GILMAN STREET
P.O. BOX 1497
MADISON WI 53701-1497

MAILED

MAR 27 2009

OFFICE OF PETITIONS

In re Application of	:	
LE et al.	:	
Application No. 10/615,829	:	ON APPLICATION FOR
Filed: July 10, 2003	:	PATENT TERM ADJUSTMENT
Attorney Docket No. 088245-0111	:	

This is in response to the REQUEST FOR RECONSIDERATION OF PATENT TERM ADJUSTMENT UNDER 37 C.F.R. §1.705 filed March 6, 2009, which is properly treated under 37 CFR 1.705(b). Applicant requests that the determination of patent term adjustment be corrected from 653 days to 967 days. Applicant requests this correction on the basis that the Office will take in excess of three years to issue this patent and in light of the recent court decision in Wyeth v. Dudas, No. 07-1492 (D.D.C. September 30, 2008).

As the instant application for patent term adjustment requests reconsideration of the patent term adjustment as it relates to the Office's failure to issue the patent within three years of the filing date, a decision is being **held in abeyance** until after the actual patent date. Knowledge of the actual date the patent issues is required to calculate the amount, if any, of additional patent term patentee is entitled to for Office failure to issue the patent within three years. See 37 CFR 1.703(b). (This is true even in this instance where a request for continued examination (RCE) was filed. The computer will not undertake the § 1.703(b) calculation until the actual date of issuance of the patent has been determined. Accordingly, it is still too soon to make a determination as to the correctness

of any period of adjustment that will or will not be entered pursuant to § 1.703(b)).

Applicant is given **TWO (2) MONTHS** from the issue date of the patent to file a written request for reconsideration of the patent term adjustment for Office failure to issue the patent within three years. A copy of this decision should accompany the request. Applicant may seek such consideration without payment of an additional fee. However, as to all other bases for seeking reconsideration of the patent term adjustment indicated in the patent, all requirements of § 1.705(d) must be met. Requests for reconsideration on other bases must be timely filed and must include payment of the required fee.

Rather than file the request for reconsideration of Patent Term Adjustment at the time of the mailing of the notice of allowance, applicant is advised that they may wait until the time of the issuance of the patent and file a request for reconsideration of the patent term pursuant to 37 CFR 1.705(d). The USPTO notes that it does not calculate the amount of time earned pursuant to 37 CFR 1.702(b) until the time of the issuance of the patent and accordingly, the Office will consider any request for reconsideration of the patent term adjustment due to an error in the calculation of 37 CFR 1.702(b) to be timely if the request for reconsideration is filed within two months of the issuance of the patent.

It is acknowledged that applicant is correct that any period of adjustment will be entered in light of 35 U.S.C. 154(B) GUARANTEE OF NO MORE THAN 3-YEAR APPLICATION PENDENCY, which provides that:

> Subject to the limitations under paragraph (2), if the issue of an original patent is delayed due to the failure of the United States Patent and Trademark Office to issue a patent within 3 years after the actual filing date of the application in the United States, not including —
>
> (i) any time consumed by continued examination of the application requested by the applicant under section 132(b);

It is noted that a Request for Continued Examination (RCE) was filed in this application on August 20, 2007.

The Office acknowledges submission of the $200.00 fee set forth in 37 CFR 1.18(e). No additional fees are required.

The application is being forwarded to the Office of Data Management for issuance of the patent. The patent term adjustment indicated on the patent (as shown on the Issue Notification mailed about three weeks prior to patent issuance) will include any additional adjustment accrued both for Office delay in issuing the patent more than four months after payment of the issue fee and satisfaction of all outstanding requirements, and for the Office taking in excess of three years to issue the patent (to the extent that the three-year period does not overlap with periods already accorded).

Telephone inquiries specific to this decision should be directed to Senior Petitions Attorney, Christina Tartera Donnell, at (571) 272-3211.

Kery A. Fries
Senior Legal Advisor
Office Patent Legal Administration

UNITED STATES PATENT AND TRADEMARK OFFICE

Commissioner for Patents
United States Patent and Trademark Office
P.O. Box 1450
Alexandria, VA 22313-1450
www.uspto.gov

FOLEY & LARDNER LLP
150 EAST GILMAN STREET
P.O. BOX 1497
MADISON WI 53701-1497

MAILED

AUG 10 2009

OFFICE OF PETITIONS

In re Patent No. 7,546,456	:	
Le et al.	:	
Issue Date: June 9, 2009	:	DECISION ON REQUEST FOR
Application No. 10/615,829	:	RECONSIDERATION OF
Filed: July 10, 2003	:	PATENT TERM ADJUSTMENT
Attorney Docket No. 088245-0111	:	

This is in response to the RENEWED REQUEST FOR RECONSIDERATION OF PATENT TERM ADJUSTMENT UNDER 37 C.F.R. §1.705, filed July 24, 2009, which is properly treated under 37 CFR 1.705(d). Patentees request that the determination of patent term adjustment for the above-identified patent be corrected from five hundred eighty (580) days to eight hundred ninety-four (894) days.

Preliminarily, patentees request that the Office defer or delay a decision on this request for reconsideration until a final decision has been rendered in Wyeth v. Dudas, 580 F.Supp.2d 138, 88 U.S.P.Q.2d 1538 (D.D.C. 2008), which is now on appeal at the U.S. Court of Appeals for the Federal Circuit, under Federal Circuit Docket No. 2009-1120. However, the Office notes that there is no specific regulatory provision for requesting that a petition under 37 CFR 1.705(d) be held in abeyance.

The request for reconsideration of patent term adjustment is **DISMISSED** with respect to making any change in the patent term adjustment determination under 35 U.S.C. 154(b) of 580 days.

The above-identified application was filed on July 10, 2003. On August 20, 2007, a request for continued examination (RCE) was filed. On June 9, 2009, the above-identified application matured

into U.S. Patent No. 7,546,456 with a revised patent term adjustment of 580 days. The Office determined that the 406 days of Office delay, pursuant to 35 U.S.C. 154(b)(1)(B)[1] and 37 CFR 1.702(b),[2] overlap with the 760 days of Office delay,[3] pursuant to 35 U.S.C. 154(b)(1)(A) and 37 CFR 1.702(a)(1),[4] accorded prior to the filing of the request for continued examination. As such, the Office allowed entry of only the period of adjustment of 760 days. No additional days of patent term adjustment were entered at issuance under the three-year pendency provision. Given the 180 days of applicant delay, the patent issued with a revised patent term adjustment of 580 days.

On July 24, 2009, patentees timely submitted this request for reconsideration of patent term adjustment within two months of the issue date of the patent. See 37 CFR 1.705(d). Patentees

---

[1] Pursuant to 35 U.S.C. 154(b)(1)(B), 37 CFR 1.702(b) provides, in pertinent part, that:

Failure to issue a patent within three years of the actual filing date of the application. Subject to the provisions of 35 U.S.C. 154(b) and this subpart, the term of an original patent shall be adjusted if the issuance of the patent was delayed due to the failure of the Office to issue a patent within three years after the date on which the application was filed under 35 U.S.C. 111(a) or the national stage commenced under 35 U.S.C. 371(b) or (f) in an international application, but not including:

(i) any time consumed by continued examination of the application requested by the applicant under section 132(b).

[2] As of the filing of the RCE on August 20, 2007, the application was pending three years and 406 days.

[3] A nonfinal Office action was mailed on October 10, 2006, 14 months and 760 days after the application was filed on July 10, 2003.

[4] 37 CFR 1.702, provides grounds for adjustment of patent term due to examination delay under the Patent Term Guarantee Act of 1999 (original applications, other than designs, filed on or after May 29, 2000).

(a) Failure to take certain actions within specified time frames. Subject to the provisions of 35 U.S.C. 154(b) and this subpart, the term of an original patent shall be adjusted if the issuance of the patent was delayed due to the failure of the Office to:

(1) Mail at least one of a notification under 35 U.S.C. 132 or a notice of allowance under 35 U.S.C. 151 not later than fourteen months after the date on which the application was filed under 35 U.S.C. 111(a) or fulfilled the requirements of 35 U.S.C. 371 in an international application[.]

aver that the correct number of days of Patent Term Adjustment is 894 days under the court's interpretation of the overlap provision as set forth in Wyeth v. Dudas, 580 F. Supp. 2d 138, 88 U.S.P.Q. 2d 1538 (D.D.C. 2008). Patentees assert that pursuant to Wyeth, a PTO delay under 35 U.S.C. 154(b)(1)(A) overlaps with a delay under 35 U.S.C. 154(b)(1)(B) only if the delays "occur on the same day." Patentees contend that the periods of delay attributable to grounds specified under 35 U.S.C. 154(b)(1)(A) and 35 U.S.C. 154(b)(1)(B) overlap by 92 days as they occur on the same calendar days in both periods. It appears that patentees contend that this overlapping period is the 92 days running from July 11, 2006 to October 10, 2006. Patentees maintain that the total non-overlapping PTO delay under 35 U.S.C. 154(b)(1)(A) and 35 U.S.C. 154(b)(1)(B) is 1074 days as these periods do not occur on the same days. Given the 180 days of applicant delay, patentees assert entitlement to 894 days of patent term adjustment.

The Office has considered patentees' interpretation of the period of overlap, but finds it inconsistent with the Office's interpretation of the overlap provision, 35 U.S.C. 154(b)(2)(A). 35 U.S.C. 154(b)(2)(A) limits the adjustment of patent term, as follows:

> to the extent that the periods of delay attributable to grounds specified in paragraph (1) overlap, the period of any adjustment granted under this subsection shall not exceed the actual number of days the issuance of the patent was delayed.

As explained in *Explanation of 37 CFR 1.703(f)*[5] *and of the United States Patent and Trademark Office Interpretation of 35 U.S.C. 154(b)(2)(A)*, 69 Fed. Reg. 34283 (June 21, 2004), the Office interprets 35 U.S.C. 154(b)(2)(A) as permitting either patent term adjustment under 35 U.S.C. 154(b)(1)(A)(i)-(iv), or patent term adjustment under 35 U.S.C. 154(b)(1)(B), but not as permitting patent term adjustment under both 35 U.S.C.

---

[5] Likewise, 37 CFR 1.703(f) provides that:

> To the extent that periods of delay attributable to the grounds specified in § 1.702 overlap, the period of adjustment granted under this section shall not exceed the actual number of days the issuance of the patent was delayed.

154(b)(1)(A)(i)-(iv) and 154(b)(1)(B). Accordingly, the Office implements the overlap provision as follows:

> If an application is entitled to an adjustment under 35 U.S.C. 154(b)(1)(B), the entire period during which the application was pending (except for periods excluded under 35 U.S.C. 154(b)(1)(B)(i)-(iii)), and not just the period beginning three years after the actual filing date of the application, is the period of delay under 35 U.S.C. 154(b)(1)(B) in determining whether periods of delay overlap under 35 U.S.C. 154(b)(2)(A). Thus, any days of delay for Office issuance of the patent more than 3 years after the filing date of the application, which overlap with the days of patent term adjustment accorded prior to the issuance of the patent will not result in any additional patent term adjustment. See 35 U.S.C. 154(b)(1)(B), 35 U.S.C. 154(b)(2)(A), and 37 CFR § 1.703(f). See *Changes to Implement Patent Term Adjustment Under Twenty Year Term; Final Rule*, 65 Fed. Reg. 54366 (Sept. 18, 2000). See also *Revision of Patent Term Extension and Patent Term Adjustment Provisions; Final Rule*, 69 Fed. Reg. 21704 (April 22, 2004), 1282 Off. Gaz. Pat. Office 100 (May 18, 2004). See also *Explanation of 37 CFR 1.703(f) and of the United States Patent and Trademark Office Interpretation of 35 U.S.C. 154(b)(2)(A)*, 69 Fed. Reg. 34283 (June 21, 2004).

Further, as stated in the *Explanation of 37 CFR 1.703(f) and of the United States Patent and Trademark Office Interpretation of 35 U.S.C. 154(b)(2)(A)*, the Office has consistently taken the position that if an application is entitled to an adjustment under the three-year pendency provision of 35 U.S.C. 154(b)(1)(B), the entire period during which the application was pending before the Office (except for periods excluded under 35 U.S.C. 154(b)(1)(B)(i)-(iii)), and not just the period beginning three years after the actual filing date of the application, is the relevant period under 35 U.S.C. 154(b)(1)(B) in determining whether periods of delay "overlap" under 35 U.S.C. 154(b)(2)(A).

This interpretation is consistent with the statute. Taken together the statute and rule provide that to the extent that periods of delay attributable to grounds specified in 35 U.S.C. 154(b)(1) and in corresponding § 1.702 overlap, the period of

adjustment granted shall not exceed the actual number of days the issuance of the patent was delayed.

In this instance, the relevant period under 35 U.S.C. 154(b)(1)(B) in determining whether periods of delay "overlap" under 35 U.S.C. 154(b)(2)(A) is the period during which the application was pending before the Office beginning on the date of filing of the application under 35 U.S.C. 111(a) on July 10, 2003, and ending on the date of filing of a request for continued examination on August 20, 2007 (not including any other periods excluded under 35 U.S.C. 154(b)(1)(B)(i)-(iii)). The relevant period ends with the filing of the RCE as the three-year time frame specified in 35 U.S.C. 154(b)(1)(B) does not include the period subsequent to the filing of the RCE. 35 U.S.C. 154(b)(1)(B)(i).

Pursuant to 35 U.S.C. 154(b)(1)(A) and 37 CFR 1.702(a)(1), 760 days of patent term adjustment were accorded during the pendency of the application for Office delay prior to the filing of the request for continued examination. There were no Office delays subsequent to the filing of the request for continued examination. Pursuant to 35 U.S.C. 154(b)(1)(B) and 37 CFR 1.702(b), 406 days of patent term adjustment accrued for Office issuance of the patent more than three years after the filing date of the application.

All of the 406 days of patent term adjustment under 37 CFR 1.702(b) overlap with the 760 days of patent term adjustment under 37 CFR 1.702(a)(1). Entry of both the 406 days and the 760 days is neither permitted nor warranted. The Office accorded the greater period of 760 days for Office delay. Accordingly, at issuance, the Office properly entered no additional days of patent term adjustment.

In view thereof, the Office affirms that the revised determination of patent term adjustment at the time of the issuance of the patent is 580 days.

The Office acknowledges the previous submission of the $200.00 fee set forth in 37 CFR 1.18(e). No additional fees are required.

Telephone inquiries specific to this matter should be directed to the undersigned at (571) 272-3211.

Christina Tartera Donnell

Christina Tartera Donnell
Senior Petitions Attorney
Office of Petitions

UNITED STATES PATENT AND TRADEMARK OFFICE

COMMISSIONER FOR PATENTS
UNITED STATES PATENT AND TRADEMARK OFFICE
P.O. BOX 1450
ALEXANDRIA, VA 22313-1450
www.uspto.gov

FOLEY & LARDNER LLP
150 EAST GILMAN STREET
P.O. BOX 1497
MADISON WI 53701-1497

MAILED

MAR 3 1 2010

OFFICE OF PETITIONS

In re Patent No. 7,546,456	:	DECISION ON REQUEST FOR
Le et al.	:	RECONSIDERATION OF
Issue Date: June 9, 2009	:	PATENT TERM ADJUSTMENT AND
Application No. 10/615,829	:	NOTICE OF INTENT TO ISSUE
Filed: July 10, 2003	:	CERTIFICATE OF CORRECTION
Atty Docket No. 088245-0111	:	

This is a decision on the petition filed on September 30, 2009,[1] which is being treated as a petition under 37 CFR 1.705(d) requesting that the patent term adjustment indicated on the above-identified patent be corrected to indicate that the term of the above-identified patent is extended or adjusted by eight hundred ninety-four (894) days.

The petition to correct the patent term adjustment indicated on the above-identified patent is **GRANTED to the extent** that the term of the above-identified patent is extended or adjusted by eight hundred ninety-three (893) days.

As the period from the filing date of the request for continued examination (RCE) to the issue date of the patent is not included in the "B" delay period, the over three year period begins on July 11, 2006, and ends on August 19, 2007, the day before the RCE was filed, and is 405 (not 406) days. See 35 U.S.C. 154(b)(1)(B)(i). As such, the patent term adjustment is 893, not 894 days.

[1] This petition was timely filed within two months of the decision on the request for reconsideration of patent term adjustment mailed August 10, 2009.

The Office will *sua sponte* issue a certificate of correction. Pursuant to 37 CFR 1.322, the Office will not issue a certificate of correction without first providing assignee or patentee an opportunity to be heard. Accordingly, patentee is given **one (1) month or thirty (30) days**, whichever is longer, from the mail date of this decision to respond. No extensions of time will be granted under § 1.136.

The Office acknowledges the previous submission of the $200.00 fee set forth in 37 CFR 1.18(e). No additional fees are required.

This matter is being referred to the Certificates of Correction Branch for issuance of a certificate of correction. The Office will issue a certificate of correction indicating that the term of the above-identified patent is extended or adjusted by **eight hundred ninety-three (893) days.**

Telephone inquiries specific to this matter should be directed to the undersigned at (571) 272-3211.

Christina Tartera Donnell

Christina Tartera Donnell
Senior Petitions Attorney
Office of Petitions

Enclosure: Copy of DRAFT Certificate of Correction

UNITED STATES PATENT AND TRADEMARK OFFICE

CERTIFICATE OF CORRECTION

PATENT : 7,546,456 B2

DATED : Jun. 9, 2009 **DRAFT**

INVENTOR(S) : Le et al.

It is certified that error appears in the above-identified patent and that said Letters Patent is hereby corrected as shown below:

On the cover page,

[*] Notice: Subject to any disclaimer, the term of this patent is extended or adjusted under 35 USC 154(b) by 580 days

Delete the phrase "by 580 days" and insert – by 893 days--

UNITED STATES PATENT AND TRADEMARK OFFICE

COMMISSIONER FOR PATENTS
UNITED STATES PATENT AND TRADEMARK OFFICE
P.O. BOX 1450
ALEXANDRIA, VA 22313-1450
www.uspto.gov

JJGJR.: 12-04

Paper No: __

MORGAN LEWIS
& BOCKIUS LLP
1111 PENNSYLVANIA AVE. NW
WASHINGTON DC 20004

COPY MAILED
DEC 16 2004
OFFICE OF PETITIONS

In re Application of
Kim, et al. :
Application No. 10/615,840 : DECISION ON PETITION
Filing Date: 10 July, 2003
Attorney Docket No. 053785-5018-02 :

This is a decision on the petition filed on 21 September, 2004, and considered under 37 C.F.R. §1.53, to obtain a filing date of 10 July, 2003, for Figures 1, 2, 3A - 3C, 3D - 3E, 4, 5A - 5B, 6A - 6B, 7A - 7B, 8A - 8B, as describe in the specification of the application.

The petition is **GRANTED**.

BACKGROUND

This nonprovisional application was deposited on 10 July, 2003.

On 24 August, 2004, the Office mailed a "Notice of Omitted Items in a Nonprovisional Application," (the 24 August Notice) and indicated, *inter alia*, that Figure(s) 1, 2, 3A - 3C, 3D - 3E, 4, 5A - 5B, 6A - 6B, 7A - 7B, 8A - 8B as described in the specification appeared to be missing on deposit of the application.

The 24 August Notice further informed Petitioner that, should he contend that the missing figure was deposited with the rest of the application at the time of filing, he could petition and make a showing to that effect, or he could accept the application as filed, or could submit the missing figure and accept the date of that submission as the date of filing.

The petition filed on 14 September, 2004, states that it is accompanied, *inter alia*, by a date-

stamped receipt card itemizing the contents of the application received by the Office and copies of Figures 1, 2, 3A - 3C, 3D - 3E, 4, 5A - 5B, 6A - 6B, 7A - 7B, 8A - 8B as described in the specification.

ANALYSIS

A review of the record reveals that:

- the instant application was deposited with the Office on 10 July, 2003; and
- the receipt card (see: MPEP §503[1]) is date stamped ("JUL 10 2003") and provides, *inter alia*:

* * *

3. Drawings - 11 sheets - 21 total figures

* * *

---

[1] MPEP §503 provides in pertinent part:

§503 Application Number and Filing Receipt

* * *

A return postcard should be attached to *each* patent application for which a receipt is desired. It is important that the return postcard itemize all of the components of the application. If the postcard does not itemize each of the components of the application, it will not serve as evidence that any component which was not itemized was received by the United States Patent and Trademark Office (USPTO). It should be recognized that the identification of an application by application number does not necessarily signify that the USPTO has accepted the application as complete (37 C.F.R. §1.53(a)).

* * *

RETURN POSTCARD

If a receipt of any item (e.g., paper or fee) filed in the USPTO is desired, it may be obtained by enclosing with the paper a self-addressed postcard specifically identifying the item. The USPTO will stamp the receipt date on the postcard and place it in the outgoing mail. A postcard receipt which itemizes and properly identifies the items which are being filed serves as *prima facie* evidence of receipt in the USPTO of all the items listed thereon on the date stamped thereon by the USPTO.

The identifying data on the postcard should be so complete as to clearly identify the item for which receipt is requested. For example, the postcard should identify the applicant's name, application number (if known), confirmation number (if known), filing date, interference number, title of the invention, etc. The postcard should also identify the type of paper being filed, e.g., new application, affidavit, amendment, notice of appeal, appeal brief, drawings, fees, motions, supplemental oath or declaration, petition, etc., and the number of pages being submitted. If a new application is being filed, all parts of the application being submitted should be separately listed on the postcard, e.g., the number of pages of specification (including written description, claims and abstract), number of claims, number of sheets of drawings, number of pages of oath/declaration, number of pages of cover sheet (provisional application).

The postcard receipt will not serve as *prima facie* evidence of receipt of any item which is not adequately itemized on the postcard. For example, merely listing on the postcard "a complete application" or "patent application" will not serve as a proper receipt for each of the required components of an application (e.g., specification (including claims), drawings (if necessary), oath or declaration and the application filing fee) or missing portions (e.g., pages, sheets of drawings) of an application if one of the components or portion of a component is found to be missing by the USPTO. Each separate component should be specifically and properly itemized on the postcard. Furthermore, merely incorporating by reference in the postcard receipt, the items listed in a transmittal letter will not serve as *prima facie* evidence of receipt of those items.

The person receiving the item(s) in the USPTO will check the listing on the postcard against the item(s) being filed to be sure they are properly identified and that all the items listed on the postcard are presently being submitted to the USPTO. If any of the items listed on the postcard are not being submitted to the USPTO, those items will be crossed off and the post-card initialed by the person receiving the items. Upon return of a postcard receipt from the USPTO, the postcard receipt should be promptly reviewed by the person who filed the items to ensure that every item specifically denoted on the postcard was received by the USPTO. If the postcard receipt has been annotated to indicate that a particular item denoted on the postcard was not received by the USPTO, the postcard receipt will not serve as *prima facie* evidence of receipt of that item in the USPTO. (Emphasis supplied.)

The record further discloses that:

- the drawing sheets that the Office acknowledges receiving are two sheets with figures 9A - 9C and 10A - 10B, for a total of five figures; and

- the missing figures are nine sheets with 16 figures (1, 2, 3A - 3C, 3D - 3E, 4, 5A - 5B, 6A - 6B, 7A-7B, 8A - 8B).

Because the return postcard receipt properly itemizes the contents of the application package in accordance with MPEP §503, the Office concludes that the Figure(s) 1, 2, 3A - 3C, 3D - 3E, 4, 5A - 5B, 6A - 6B, 7A - 7B, 8A - 8B as described in the specification were submitted on 27 May, 2004, and subsequently was misplaced in the Office.

Accordingly, the petition under 37 C.F.R. §1.53 is **granted**; the petition fee is waived and it appears that it was not charged; and the Notice mailed on 24 August, 2004, hereby is withdrawn as to Figure(s) 1, 2, 3A - 3C, 3D - 3E, 4, 5A - 5B, 6A - 6B, 7A - 7B, 8A - 8B as described in the specification.

This application is released to the Office of Initial Patent Examination for further processing <u>with a filing date of 10 July, 2003</u>, for the entire application and in particular for Figure(s) 1, 2, 3A - 3C, 3D - 3E, 4, 5A - 5B, 6A - 6B, 7A - 7B, 8A - 8B as described in the specification using:

- pages 1 - 31 (Specification, Claims, Abstract), and 11 sheets of drawings (Fig(s). 9A - 9C and 10A - 10B) deposited on 10 July, 2003; and

- Fig(s).1, 2, 3A - 3C, 3D - 3E, 4, 5A - 5B, 6A - 6B, 7A - 7B, 8A - 8B as described in the specification, deposited on 21 September, 2004;

- <u>with direction to OIPE to correct Office records to reflect that 31 pages of specification (description, claims and abstract) and 11 sheets of drawings were present on filing on 10 July, 2003, and forward to Petitioner a corrected filing receipt setting forth a filing date of 10 July, 2003, reflecting therein that 31 pages of specification (description, claims and abstract) and 11 sheets of drawings were present on filing</u>.

Thereafter, the application will be considered by the examiner <u>in due course</u>.

Telephone inquiries concerning this decision may be directed to the undersigned at (571) 272-3214.

John J. Gillon, Jr.
Senior Attorney
Office of Petitions

UNITED STATES PATENT AND TRADEMARK OFFICE

Commissioner for Patents
United States Patent and Trademark Office
P.O. Box 1450
Alexandria, VA 22313-1450
www.uspto.gov

QUALCOMM INCORPORATED
5775 MOREHOUSE DR.
SAN DIEGO CA 92121

COPY MAILED

JUN 1 8 2009

OFFICE OF PETITIONS

In re Application of	:	
Hawkes et al.	:	
Application No. 10/615,882	:	ON PETITION
Filed: July 8, 2003	:	
Attorney Docket No. 030441	:	

This is a decision on the petition under 37 C.F.R. § 1.137(b), filed April 30, 2009, to revive the above-identified application.

The petition is **GRANTED**.

The petition satisfies the requirements of 37 CFR 1.137(b) in that petitioner has supplied (1) the reply in the form of a Request for Continued Examination, (2) the petition fee, and (3) a proper statement of unintentional delay.

Telephone inquiries concerning this decision should be directed to the undersigned at (571) 272-3206.

This matter is being referred to Technology Center AU 2439 for processing of the Request for Continued Examination under 37 CFR 1.114 filed concurrently with the instant petition.

Liana Walsh
Petitions Examiner
Office of Petitions

UNITED STATES PATENT AND TRADEMARK OFFICE

COMMISSIONER FOR PATENTS
UNITED STATES PATENT AND TRADEMARK OFFICE
P.O. BOX 1450
ALEXANDRIA, VA 22313-1450
www.uspto.gov

Mark Sgantzos
The Martinez Group PLLC
55 Poplar Street, Suite 1-D
Brooklyn Heights, NY 11201

COPY MAILED

FEB 07 2005

OFFICE OF PETITIONS

In re Application of	:	
Philip Davis	:	
Application No. 10/615,883	:	ON PETITION
Filed: July 9, 2003	:	
Attorney Docket No. 1019-2	:	

This is a decision on the petition under 37 CFR 1.137(b), filed December 6, 2004, to revive the above-identified application.

The petition is **GRANTED**.

Telephone inquiries concerning this decision should be directed to the undersigned at (571) 272-3223.

The application file is being referred to the Office of Initial Patent Examination for further processing.

Marianne E. Jenkins
Petitions Examiner
Office of Petitions
Office of the Deputy Commissioner
for Patent Examination Policy

SPE RESPONSE FOR CERTIFICATE OF CORRECTION

Paper No.: _____

DATE : May 9, 2006

TO SPE OF : ART UNIT 2188

SUBJECT : Request for Certificate of Correction for Appl. No.: 10/615907 Patent No.: 7,032,062

Please respond to this request for a certificate of correction within 7 days.

Please review the requested changes/corrections as shown in the **COCIN** document(s) in the IFW application image. No new matter should be introduced, nor should the scope or meaning of the claims be changed.

Please complete the response (see below) and forward the completed response to scanning using document code **COCX**.

Magdalene Talley

Certificates of Correction Branch

703-308-9390 ext. 116

Thank You For Your Assistance

The request for issuing the above-identified correction(s) is hereby:

Note your decision on the appropriate box.

- ☒ **Approved** — All changes apply.
- ☐ **Approved in Part** — Specify below which changes **do not** apply.
- ☐ **Denied** — State the reasons for denial below.

Comments: _____

SPE

2188

Art Unit

UNITED STATES PATENT AND TRADEMARK OFFICE

COMMISSIONER FOR PATENTS
UNITED STATES PATENT AND TRADEMARK OFFICE
P.O. BOX 1450
ALEXANDRIA, VA 22313-1450
www.uspto.gov

KUDIRKA & JOBSE, LLP
ONE STATE STREET
SUITE 800
BOSTON MA 02109

COPY MAILED
NOV 29 2005
OFFICE OF PETITIONS

Applicant: Pichler et al.
Appl. No.: 10/615,924
Filing Date: July 10, 2003
Title: ELECTROLUMINESCENT DEVICES WITH ELECTRODE PROTECTION
Attorney Docket No.: C0003/7005C1
Pub. No.: US 2005/0023961 A1
Pub. Date: February 3, 2005

This is a decision on the request for corrected of patent application publication under 37 CFR 1.221(b), filed on April 6, 2005, for the above-identified application

The request is DISMISSED.

Applicant requests that the application be republished because the patent application publication contains a material error, as the publication omits dependent claim 31.

37 CFR 1.221(b) is applicable "only when the Office makes a material mistake which is apparent from Office records . . . Any request for a corrected publication or revised patent application publication other than provided as provided in paragraph (a) of this section must be filed within two months from the date of the patent application publication. This period is not extendable." A material mistake must affect the public's ability to appreciate the technical disclosure of the patent application publication, to determine the scope of the patent application publication, or to determine the scope of the provisional rights that an applicant may seek to enforce upon issuance of a patent.[1]

The request for corrected publication received on April 6, 2005, was not timely filed under 37 CFR 1.221(b).

The applicant is advised that a "request for republication of an application previously published" may be filed under 37 CFR 1.221(a). Such a request for republication "must include a copy of the application in compliance with the Office's electronic filing system requirements and be accompanied by the publication fee set forth in § 1.18(d) and the processing fee set forth in

[1] Changes to Implement Eighteen-Month Publication of Patent Applications, 65 FR 57023, 57038 (Sept. 20, 2000), 1239 Off. Gaz. Pat. Office Notices 63, 75 (Oct. 10, 2000) (final rule).

§ 1.17(i)." If the request for republication does not comply with the electronic filing system requirements, the republication will not take place and the publication fee set forth in § 1.18(d) will be refunded. The processing fee will be retained.

Any request for republication under 37 CFR 1.221(a), must be submitted via the EFS system and questions or request for reconsideration of the decision, should be addressed as follows:

By mail to: Mail Stop PGPUB
Commissioner for Patents
P.O. Box 1450
Alexandria, Va. 22313-1450

By facsimile: 571-273-8300

Inquiries relating to this matter may be directed to Mark O. Polutta at (571) 272-7709.

Mark O. Polutta
Office of Patent Legal Administration
Office of the Deputy Commissioner
for Patent Examination Policy

UNITED STATES PATENT AND TRADEMARK OFFICE

Commissioner for Patents
United States Patent and Trademark Office
P.O. Box 1450
Alexandria, VA 22313-1450
www.uspto.gov

PATENT DEPARTMENT (51851)
KILPATRICK STOCKTON LLP
1001 WEST FOURTH STREET
WINSTON-SALEM NC 27101

MAILED

NOV 09 2009

OFFICE OF PETITIONS

In re Application of	:	
Rosenberg et al.	:	DECISION ON REQUEST
Application No. 10/615927	:	FOR RECONSIDERATION
Filing or 371(c) Date: 07/10/2003	:	OF PATENT TERM ADJUSTMENT
Attorney Docket Number:	:	
IMM053A	:	

This is a decision on the "REQUEST FOR RECONSIDERATION OF PATENT TERM ADJUSTMENT DETERMINATION", filed July 30 2009. This matter is being properly treated as an application for patent term adjustment pursuant to 37 CFR 1.705(b), the application having been submitted prior to issuance of a patent. Applicants submit that the correct patent term adjustment to be indicated on the patent is 1459 days, less further reduction in connection with the amendment filed July 29, 2009, and not 1171 as calculated by the Office as of the mailing of the initial determination of patent term adjustment. Applicant requests this correction on the basis that the Office will take in excess of three years to issue this patent and on the basis that the adjustment is subject to further reduction of 25 days in connection with the information disclosure statement (IDS) filed November 14, 2008.

Applicants assert, based upon the holding in Wyeth et al. v Dudas, No. 07-1492 (D.C.C. September 30, 2008), that applicant is entitled to an additional delay of 313 days of USPTO delay that accrued for failing to issue the patent within three (3) years of filing.

Regarding applicant's asserted entitlement to Patent Term Adjustment ("PTA") pursuant to 37 CFR 1.705(b), as it relates to the Office's failure to issue the patent within 3 years of the filing date, the application for patent term adjustment under 37 CFR 1.705(b) is **DISMISSED as PREMATURE**.

Knowledge of the actual date the patent issues is required to calculate the amount, if any, of additional patent term patentee is entitled to for Office failure to issue the patent within 3 years. See § 1.702(b). (This is true even where a request for continued examination (RCE) was filed). The computer will not undertake the § 1.702(b) calculation until the actual date of issuance of the patent has been determined. Likewise, the computer will not calculate any further Office delay under § 1.702(a)(4) or applicant delay under § 1.704(c)(10) until the actual date of

issuance of the patent has been determined. As such, the Office can not make a determination on the correctness of the patent term adjustment until the patent has issued.

Requesting reconsideration of the patent term adjustment to be indicated on the patent under 37 CFR 1.705(b) based on the initial determination of patent term adjustment and a projected issuance date of the patent (or even the filing date of the request for continued examination) is premature. Accordingly, it is appropriate to dismiss as premature such a request.

Rather than file an application for patent term adjustment under 37 CFR 1.705(b) contesting the 37 CFR 1.702(b) calculation at the time of the mailing of the notice of allowance, applicant is advised that they may wait until the time of the issuance of the patent and file a request for reconsideration of the patent term adjustment pursuant to 37 CFR 1.705(d). As the USPTO does not calculate the amount of time earned pursuant to 37 CFR 1.702(b) until the time of the issuance of the patent, the Office will consider any request for reconsideration of the patent term adjustment due to an error in the calculation of 37 CFR 1.702(b) to be timely if the request for reconsideration is filed within two months of the issuance of the patent. However, as to all other bases for contesting the initial determination of patent term adjustment received with the notice of allowance, applicant must timely file an application for patent term adjustment prior to the payment of the issue fee[1].

The Determination of Patent Term Adjustment mailed May 4, 2009, indicated that the above-identified application was entitled to a PTA of 1171 days. Applicants indicate that the adjustment should be reduced an additional 25 days in connection with the IDS filed November 14, 2008.

Review of the record reveals that applicants are correct in that the Office neglected to assess a reduction of 25 days in connection with the IDS filed November 14, 2008. In accordance with 37 CFR 1.704(c)(8), the reduction commenced October 21, 2008, the day after the date the initial reply (RCE and Amendment) were filed, and ended November 14, 2008, the date that supplemental reply (IDS) was filed.

In view of the foregoing, the correct determination of patent term adjustment at the time of the mailing of the Notice of Allowance is 1146 days, (1187 days of PTO delay, reduced by 41 days of applicant delay), subject to any terminal disclaimer.

The Office has updated the PAIR screen to reflect that the correct Patent Term Adjustment (PTA) determination at the time of the mailing of the Notice of Allowance is 1146 days. A copy of the updated PAIR screen, showing the correct determination, is enclosed.

---

[1] For example, if applicant disputes both the calculation of patent term adjustment under 37 CFR 1.702(a)(1) for Office failure to mail a first Office action or notice of allowance not later than fourteen months after the date on which the application was filed and under 37 CFR 1.702(b) for Office failure to issue a patent within three years of the actual filing date of the application, then applicant must still timely file an application for patent term adjustment prior to the payment of the issue fee to contest the calculation of Office delay in issuing a first Office action or notice of allowance. See 37 CFR 1.705(b) and 35 U.S.C. 154(b)(3)(B). A dispute as to the calculation of the §1.702(a)(1) period raised on request for reconsideration of patent term adjustment under 37 CFR 1.705(d) will be dismissed as untimely filed.

The Office acknowledges submission of the $200.00 fee set forth in 37 CFR 1.18(e) for consideration of the application for patent term adjustment under 37 CFR 1.705(b).

Any request for reconsideration of the patent term adjustment indicated on the patent must be timely filed within 2 months after issuance pursuant to 37 CFR 1.705(d) and must include payment of the required fee under 37 CFR 1.18(e).

The Office of Data Management has been advised of this decision. This application is being referred to the Office of Data Management for issuance of the patent.

Telephone inquiries specific to this matter should be directed to Attorney Derek Woods at (571) 272-3232.

/ALESIA M. BROWN/

Alesia M. Brown
Petitions Attorney
Office of Petitions
Office of the Deputy Commissioner
for Patent Examination Policy

Enclosure: Adjusted PAIR Calculation

PALM INTRANET

Day : Monday
Date: 11/9/2009
Time: 08:48:38

PTA Calculations for Application: 10/615927

Application Filing Date:	07/10/2003	PTO Delay (PTO):	1187
Issue Date of Patent:		Three Years:	0
Pre-Issue Petitions:	0	Applicant Delay (APPL):	16
Post-Issue Petitions:	0	Total PTA (days):	1146
PTO Delay Adjustment:	-25		

File Contents History

Number	Date	Contents Description	PTO	APPL	START
95	11/08/2009	ADJUSTMENT OF PTA CALCULATION BY PTO		25	
83	05/04/2009	MAIL NOTICE OF ALLOWANCE			
82	05/01/2009	ISSUE REVISION COMPLETED			
81	05/01/2009	EXAMINER'S AMENDMENT COMMUNICATION			
80	04/27/2009	EXAMINER INTERVIEW SUMMARY RECORD (PTOL - 413)			
79	04/22/2009	NOTICE OF ALLOWANCE DATA VERIFICATION COMPLETED			
78	04/22/2009	CASE DOCKETED TO EXAMINER IN GAU			
77	04/22/2009	ALLOWED CASE RETURNED TO THE EXAMINER FOR CLERICAL PROCESSING			
76	04/22/2009	DOCUMENT VERIFICATION			
75	04/21/2009	NOTICE OF ALLOWABILITY			
74	02/02/2009	INFORMATION DISCLOSURE STATEMENT CONSIDERED			
73	03/17/2009	PARALEGAL TD ACCEPTED			
72	03/09/2009	TERMINAL DISCLAIMER FILED		0	70
71	03/16/2009	DATE FORWARDED TO EXAMINER			
70	03/09/2009	RESPONSE AFTER NON-FINAL ACTION			
69	02/02/2009	REFERENCE CAPTURE ON IDS			
68	02/02/2009	INFORMATION DISCLOSURE STATEMENT (IDS) FILED			
67	02/02/2009	INFORMATION DISCLOSURE STATEMENT (IDS) FILED			
66	12/09/2008	MAIL NON-FINAL REJECTION			
65	12/08/2008	NON-FINAL REJECTION			
64	11/14/2008	INFORMATION DISCLOSURE STATEMENT CONSIDERED			
63	11/14/2008	INFORMATION DISCLOSURE STATEMENT (IDS) FILED			
62	10/23/2008	DATE FORWARDED TO EXAMINER			
61	10/20/2008	AMENDMENT SUBMITTED/ENTERED WITH FILING OF CPA/RCE			
60	10/23/2008	DATE FORWARDED TO EXAMINER			
59	10/20/2008	REQUEST FOR CONTINUED EXAMINATION (RCE)			
58	10/23/2008	DISPOSAL FOR A RCE/CPA/129 (EXPRESS ABANDONMENT IF CPA)			
57	10/20/2008	WORKFLOW - REQUEST FOR RCE - BEGIN			
56	03/10/2008	ELECTRONIC INFORMATION DISCLOSURE STATEMENT			

55	07/21/2008	MAIL FINAL REJECTION (PTOL - 326)			
54	06/12/2008	FINAL REJECTION			
48	03/10/2008	INFORMATION DISCLOSURE STATEMENT CONSIDERED			
47	05/21/2008	DATE FORWARDED TO EXAMINER			
46	03/27/2008	RESPONSE AFTER NON-FINAL ACTION		16	37
45	03/27/2008	REQUEST FOR EXTENSION OF TIME - GRANTED			
44	03/10/2008	INFORMATION DISCLOSURE STATEMENT (IDS) FILED			
43	08/29/2006	INFORMATION DISCLOSURE STATEMENT CONSIDERED			
42	08/29/2006	INFORMATION DISCLOSURE STATEMENT (IDS) FILED			
41	10/18/2004	INFORMATION DISCLOSURE STATEMENT CONSIDERED			
40	10/18/2004	INFORMATION DISCLOSURE STATEMENT (IDS) FILED			
39	07/10/2003	INFORMATION DISCLOSURE STATEMENT CONSIDERED			
38	07/10/2003	INFORMATION DISCLOSURE STATEMENT (IDS) FILED			
37	12/11/2007	MAIL NON-FINAL REJECTION	1187		-1
36	12/10/2007	NON-FINAL REJECTION			
35	12/06/2007	PG-PUB ISSUE NOTIFICATION			
34	12/05/2007	CASE DOCKETED TO EXAMINER IN GAU			
30	11/12/2007	CASE DOCKETED TO EXAMINER IN GAU			
29	11/08/2007	CASE DOCKETED TO EXAMINER IN GAU			
28	10/17/2007	WITHDRAW FLAGGED FOR 5/25			
27	10/15/2007	FLAGGED FOR 5/25			
26	09/27/2007	IFW TSS PROCESSING BY TECH CENTER COMPLETE			
25	10/18/2004	REFERENCE CAPTURE ON IDS			
24	10/18/2004	INFORMATION DISCLOSURE STATEMENT (IDS) FILED			
23	07/10/2003	REFERENCE CAPTURE ON IDS			
22	07/10/2003	INFORMATION DISCLOSURE STATEMENT (IDS) FILED			
21	07/10/2003	PRELIMINARY AMENDMENT			
20	08/30/2007	APPLICATION RETURN FROM OIPE			
19	08/30/2007	SENT TO CLASSIFICATION CONTRACTOR			
18	08/30/2007	APPLICATION IS NOW COMPLETE			
17	08/26/2006	ADDITIONAL APPLICATION FILING FEES			
16	08/16/2007	CORRESPONDENCE ADDRESS CHANGE			
14	06/23/2006	NOTICE MAILED--APPLICATION INCOMPLETE--FILING DATE ASSIGNED			
13	10/07/2003	PRE-EXAM OFFICE ACTION WITHDRAWN			
12	01/13/2004	PRE-EXAM OFFICE ACTION WITHDRAWN			
11	01/13/2004	APPLICATION RETURN TO OIPE			
10	01/12/2004	APPLICATION DISPATCHED FROM OIPE			
9	01/12/2004	APPLICATION IS NOW COMPLETE			
8	12/08/2003	ADDITIONAL APPLICATION FILING FEES			
7	12/08/2003	APPLICANT HAS SUBMITTED NEW DRAWINGS TO CORRECT CORRECTED PAPERS PROBLEMS			

6	10/07/2003	CORRECTED PAPER			
4	09/26/2003	CASE CLASSIFIED BY OIPE			
3	09/26/2003	CLEARED BY OIPE CSR			
2	08/22/2003	IFW SCAN & PACR AUTO SECURITY REVIEW			
1	07/10/2003	INITIAL EXAM TEAM NN			

Search Another: Application# Search

EXPLANATION OF PTA CALCULATION

EXPLANATION OF PTE CALCULATION

To go back, right click here and select Back. To go forward, right click here and select Forward. To refresh, right click here and select Refresh.
Back to OASIS | Home page

UNITED STATES PATENT AND TRADEMARK OFFICE

UNITED STATES DEPARTMENT OF COMMERCE
United States Patent and Trademark Office
Address: COMMISSIONER FOR PATENTS
P.O. Box 1450
Alexandria, Virginia 22313-1450
www.uspto.gov

PATENT DEPARTMENT (51851)
KILPATRICK STOCKTON LLP
1001 WEST FOURTH STREET
WINSTON-SALEM, NC 27101

Mail Date: 04/30/2010

Applicant	: Louis B. Rosenberg	: DECISION ON REQUEST FOR
Patent Number	: 7636080	: RECALCULATION of PATENT
Issue Date	: 12/22/2009	: TERM ADJUSTMENT IN VIEW
Application No	: 10/615,927	: OF WYETH AND NOTICE OF INTENT TO
Filed	: 07/10/2003	: ISSUE CERTIFICATE OF CORRECTION
		:

The Request for Recalculation is **GRANTED** to the extent indicated.

The patent term adjustment has been determined to be **1460** days. The USPTO will *sua sponte* issue a certificate of correction reflecting the amount of PTA days determined by the recalculation.

Prior to the issuance of the certificate of correction, the USPTO will afford patentee an opportunity to be heard and request reconsideration. Accordingly, patentee has **one month or thirty (30) days**, whichever is longer, to file a request for reconsideration of this patent term adjustment calculation. See 35 U.S.C. 154(b)(3)(B)(ii) and 37 CFR 1.322(a)(4). No extensions of time will be granted under 37 CFR 1.136.

Patentee should use document code PET.OP if electronically filing a request for reconsideration of this patent term adjustment calculation. The patentee must also include the information required by 37 CFR 1.705(b)(2) and the fee required by 37 CFR 1.18(e). If patentee does not file a timely request for reconsideration of this patent term adjustment calculation including the information required by 37 CFR 1.705(b)(2) and the fee required by 37 CFR 1.18(e), the USPTO will issue a certificate of correction reflecting the PTA determination noted above.

Patentee should be aware that in order to preserve the right to review in the United States District Court for the District of Columbia of the USPTO patent term adjustment determination, patentee must ensure that he or she also take the steps required under 35 U.S.C. 154(b)(4)(A) in a timely manner. Nothing in the request for recalculation should be construed as providing an alternative time frame for commencing a civil action under 35 U.S.C. 154(b)(4)(A).

Any questions concerning this decision should be directed to the Office of Patent Legal Administration at 571-272-7702.

UNITED STATES PATENT AND TRADEMARK OFFICE

Commissioner for Patents
United States Patent and Trademark Office
P.O. Box 1450
Alexandria, VA 22313-1450
www.uspto.gov

G.E. EHRLICH (1995) LTD.
C/O ANTHONY CASTORINA SUITE 207
2001 JEFFERSON DAVIS HIGHWAY
ARLINGTON, VA 22202

COPY MAILED

JUL 0 2 2004

OFFICE OF PETITIONS

In re Application of :
Arie Ariav :
Application No. 10/615,952 : NOTICE
Filed: July 10, 2003 :
Attorney Docket No. 26389

This is a notice regarding your request for acceptance of a fee deficiency submission under 37 CFR 1.28. On September 1, 1998, the Court of Appeals for the Federal Circuit held that 37 CFR 1.28(c) is the sole provision governing the time for correction of the erroneous payment of the issue fee as a small entity. **See DH Technology v. Synergystex International, Inc. 154 F.3d 1333, 47 USPQ2d 1865 (Fed. Cir. Sept. 1, 1998).**

The Office no longer investigates or rejects original or reissue applications under 37 CFR 1.56. **1098 Off. Gaz. Pat. Office 502 (January 3, 1989)**. Therefore, nothing in this Notice is intended to imply that an investigation was done.

Your fee deficiency submission under 37 CFR 1.28 is hereby **ACCEPTED**.

Inquiries related to this communication should be directed to the Office of Petitions Staff at (703) 305-9285.

This file is being forwarded to the Publishing Division.

Irvin Dingle
Petitions Examiner
Office of Petitions
Office of the Deputy Commissioner
for Patent Examination Policy

UNITED STATES PATENT AND TRADEMARK OFFICE

COMMISSIONER FOR PATENTS
UNITED STATES PATENT AND TRADEMARK OFFICE
P.O. BOX 1450
ALEXANDRIA, VA 22313-1450
www.uspto.gov

Paper No. _____

Date : May 4, 2005

TO : Director, Office of Patent Publication

FROM : Office of the Deputy Commissioner
for Patent Examination Policy

SUBJECT : Withdrawal from Issue of

Applicant(s) :Frederick E. Shelton et al
Application No. :10/615,974
Filed :July 9, 2003

The above-identified application has been assigned Patent No. 6,892,923 and an issue date of May 17, 2005.

It is hereby directed that this application be withdrawn from issue at the request of the applicant.

Do not refund the issue fee.

The following erratum should be published in the Official Gazette if the above-identified application is published in the OG of May 17, 2005:

"All reference to Patent No. 6,892,923 to Frederick E. Shelton et al of Ohio for SURGICAL STAPLING INSTRUMENT INCORPORATING A TAPERED FIRING BAR FOR INCREASED FLEXIBILITY AROUND THE ARTICULATION JOINT appearing in the Official Gazette of May 17, 2005 should be deleted since no patent was granted."

Karen Creasy

Karen Creasy
Petitions Examiner
Office of Petitions
Office of the Deputy Commissioner
for Patent Examination Policy

cc: Paul Harrison, MDW-4B03, (FAX-273-5468
Deneise Boyd, MDE-3D39 (FAX-273-5124)
Mary Louise McAskill, ST-8C15 (FAX 305-4372)
Niomi Farmer, ST-8C14 (FAX-305-4372)
Mary E. Johnson (Cookie), MDE-7C71 (FAX 273-0038)
Duane Davis P/OPC MDE-7D89
Tamara Greene, ST-8C13

UNITED STATES PATENT AND TRADEMARK OFFICE

Commissioner for Patents
United States Patent and Trademark Office
P.O. Box 1450
Alexandria, VA 22313-1450
www.uspto.gov

FROST BROWN TODD LLC
2200 PNC CENTER
201 E. FIFTH STREET
CINCINNATI OH 45202-4182

COPY MAILED

MAY 0 4 2005

OFFICE OF PETITIONS

ON PETITION

In re Application of	:	
Frederick E. Shelton et al	:	
Application No. 10/615,974	:	
Filed: July 9, 2003	:	
Attorney Docket No. END909.0511036	:	

This is a decision on the petition, filed May 4, 2005, under 37 CFR 1.313(c)(2) to withdraw the above-identified application from issue after payment of the issue fee.

The petition is **GRANTED.**

The above-identified application is withdrawn from issue for consideration of a submission under 37 CFR 1.114 (request for continued examination). See 37 CFR 1.313(c)(2).

Petitioner is advised that the issue fee paid on February 9, 2005 in the above-identified application cannot be refunded. If, however, the above-identified application is again allowed, petitioner may request that it be applied towards the issue fee required by the new Notice of Allowance.[1]

Telephone inquiries should be directed to the undersigned at (571) 272-3208.

The examiner of Technology Center AU 3721 will consider the request for continued examination under 37 CFR 1.114.

Karen Creasy

Karen Creasy
Petitions Examiner
Office of Petitions
Office of the Deputy Commissioner
for Patent Examination Policy

---

[1] The request to apply the issue fee to the new Notice may be satisfied by completing and returning the new Issue Fee Transmittal Form PTOL-85(b), which includes the following language thereon: "Commissioner for Patents is requested to apply the Issue Fee and Publication Fee (if any) or re-apply any previously paid issue fee to the application identified above." Petitioner is advised that, whether a fee is indicated as being due or not, the Issue Fee Transmittal Form **must** be completed and timely submitted to avoid abandonment. Note the language in bold text on the first page of the Notice of Allowance and Fee(s) Due (PTOL-85).

UNITED STATES PATENT AND TRADEMARK OFFICE

UNITED STATES DEPARTMENT OF COMMERCE
United States Patent and Trademark Office
Address: COMMISSIONER FOR PATENTS
P.O. Box 1450
Alexandria, Virginia 22313-1450
www.uspto.gov

OBLON, SPIVAK, MCCLELLAND MAIER & NEUSTADT, L.L.P.
1940 DUKE STREET
ALEXANDRIA, VA 22314

Mail Date: 04/20/2010

Applicant	: Toru Futami	: DECISION ON REQUEST FOR
Patent Number	: 7641871	: RECALCULATION of PATENT
Issue Date	: 01/05/2010	: TERM ADJUSTMENT IN VIEW
Appliction No	: 10/615,976	: OF WYETH AND NOTICE OF INTENT TO
Filed	: 07/10/2003	: ISSUE CERTIFICATE OF CORRECTION
		:

The Request for Recalculation is **GRANTED** to the extent indicated.

The patent term adjustment has been determined to be **954** days. The USPTO will *sua sponte* issue a certificate of correction reflecting the amount of PTA days determined by the recalculation.

Prior to the issuance of the certificate of correction, the USPTO will afford patentee an opportunity to be heard and request reconsideration. Accordingly, patentee has **one month or thirty (30) days**, whichever is longer, to file a request for reconsideration of this patent term adjustment calculation. See 35 U.S.C. 154(b)(3)(B)(ii) and 37 CFR 1.322(a)(4). No extensions of time will be granted under 37 CFR 1.136.

Patentee should use document code PET.OP if electronically filing a request for reconsideration of this patent term adjustment calculation. The patentee must also include the information required by 37 CFR 1.705(b)(2) and the fee required by 37 CFR 1.18(e). If patentee does not file a timely request for reconsideration of this patent term adjustment calculation including the information required by 37 CFR 1.705(b)(2) and the fee required by 37 CFR 1.18(e), the USPTO will issue a certificate of correction reflecting the PTA determination noted above.

Patentee should be aware that in order to preserve the right to review in the United States District Court for the District of Columbia of the USPTO patent term adjustment determination, patentee must ensure that he or she also take the steps required under 35 U.S.C. 154(b)(4)(A) in a timely manner. Nothing in the request for recalculation should be construed as providing an alternative time frame for commencing a civil action under 35 U.S.C. 154(b)(4)(A).

Any questions concerning this decision should be directed to the Office of Patent Legal Administration at 571-272-7702.

UNITED STATES PATENT AND TRADEMARK OFFICE

Commissioner for Patents
United States Patent and Trademark Office
P.O. Box 1450
Alexandria, VA 22313-1450
www.uspto.gov

FITZPATRICK CELLA HARPER & SCINTO
30 ROCKEFELLER PLAZA
NEW YORK NY 10112

COPY MAILED

AUG 0 3 2004

OFFICE OF PETITIONS

ON PETITION

In re Application of :
Toshikazu Ohnishi et al :
Application No. 10/615,995 :
Filed: July 10, 2003 :
Attorney Docket No. 03500.010106.5 :

This is a decision on the petition, filed July 27, 2004, under 37 CFR 1.313(c)(2) to withdraw the above-identified application from issue after payment of the issue fee.

The petition is **GRANTED.**

The above-identified application is withdrawn from issue for consideration of a submission under 37 CFR 1.114 (request for continued examination). See 37 CFR 1.313(c)(2).

Petitioner is advised that the issue fee paid on June 21, 2004 in the above-identified application cannot be refunded. If, however, the above-identified application is again allowed, petitioner may request that it be applied towards the issue fee required by the new Notice of Allowance.[1]

Telephone inquiries should be directed to the undersigned at (703) 305-8859.

The application will be referred to Technology Center AU 2879 for processing of the request for continued examination under 37 CFR 1.114.

Karen Creasy

Karen Creasy
Petitions Examiner
Office of Petitions
Office of the Deputy Commissioner
for Patent Examination Policy

---

[1] The request to apply the issue fee to the new Notice may be satisfied by completing and returning the new Issue Fee Transmittal Form PTOL-85(b), which includes the following language thereon: "Commissioner for Patents is requested to apply the Issue Fee and Publication Fee (if any) or re-apply any previously paid issue fee to the application identified above." Petitioner is advised that, whether a fee is indicated as being due or not, the Issue Fee Transmittal Form **must** be completed and timely submitted to avoid abandonment. Note the language in bold text on the first page of the Notice of Allowance and Fee(s) Due (PTOL-85).

UNITED STATES PATENT AND TRADEMARK OFFICE

Commissioner for Patents
United States Patent and Trademark Office
P.O. Box 1450
Alexandria, VA 22313-1450
www.uspto.gov

KEELING PATENTS AND TRADEMARKS
3310 KATY FREEWAY
SUITE 100
HOUSTON TX 77007

COPY MAILED

JUL 06 2007

OFFICE OF PETITIONS

In re Application of	:	
Earl Littman, et al.	:	
Application No. 10/616,000	:	DECISION ON PETITION
Filed: July 9, 2003	:	TO MAKE SPECIAL UNDER
Attorney Docket No. 1656.002	:	37 CFR 1.102(c)(1)
	:	

This is a decision on the petition under 37 CFR 1.102(c)(1), filed June 21, 2007, to make the above-identified application special based on applicant's age as set forth in M.P.E.P. § 708.02, Section IV.

The petition is **GRANTED**.

A grantable petition to make an application special under 37 CFR 1.102(c)(1) and MPEP § 708.02, Section IV: Applicant's Age must be accompanied by evidence showing that at least one of the applicants is 65 years of age, or more, such as a birth certificate or a statement by applicant. No fee is required

The instant petition includes a declaration statement signed by applicant Earl Littman. Accordingly, the above-identified application has been accorded "special" status.

Telephone inquiries concerning this decision should be directed to undersigned at 571-272-1642.

All other inquiries concerning either the examination or status of the application should be directed to the Technology Center.

The application is being forwarded to the Technology Center Art Unit 3622 for action on the merits commensurate with this decision.

April M. Wise
Petitions Examiner
Office of Petitions

SPE RESPONSE FOR CERTIFICATE OF CORRECTION

Paper No.: _____

DATE : December 20, 2006

TO SPE OF : ART UNIT 2646

SUBJECT : Request for Certificate of Correction for Appl. No.: 10/616001 patent No.: 6,996,229

Please respond to this request for a certificate of correction within 7 days.

Please review the requested changes/corrections as shown in the **COCIN** document(s) in the IFW application image. No new matter should be introduced, nor should the scope or meaning of the claims be changed.

Please complete the response (see below) and forward the completed response to scanning using document code **COCX**.

Magdalene Talley

Certificates of Correction Branch

703-308-9390 ext. 116

Thank You For Your Assistance

The request for issuing the above-identified correction(s) is hereby:

Note your decision on the appropriate box.

- ☑ **Approved** — **All** changes apply.
- ☐ **Approved in Part** — Specify below which changes **do not** apply.
- ☐ **Denied** — State the reasons for denial below.

Comments: _____

FAN TSANG
SUPERVISORY PATENT EXAMINER
TECHNOLOGY CENTER 2600
SPE

2614
Art Unit

PTOL-306 (REV. 7/03)

U.S. DEPARTMENT OF COMMERCE Patent and Trademark Office

UNITED STATES
PATENT AND
TRADEMARK OFFICE

Commissioner for Pat nts
Washington, DC 20231
www.uspto.gov

9/16/03

Bromberg and Sunstein LLP
125 Summer Street
Boston MA 02110-1618

Dear Applicant:

The Box PGPub replacement drawings for application number 10/616,025 received on 8/7/03 by the U. S. Patent and Trademark Office will be included for patent publication.

Telephone inquiries should be directed to Customer Service, Office of Initial Patent Examination, at 703-308-1202.

UNITED STATES
PATENT AND
TRADEMARK OFFICE

Commissioner for Patents
Washington, DC 20231
www.uspto.gov

D. Durham

Signature of Reviewer, Office of Initial Patent Examination

UNITED STATES PATENT AND TRADEMARK OFFICE

Commissioner for Patents
United States Patent and Trademark Office
P.O. Box 1450
Alexandria, VA 22313-1450
www.uspto.gov

LEE & MORSE, P.C.
3141 FAIRVIEW PARK DRIVE
SUITE 500
FALLS CHURCH, VA 22042

COPY MAILED

AUG 24 2009

OFFICE OF PETITIONS

In re Application of	:	
LEE, Hong-Seok et al.	:	
Application No. 10/616,037	:	DECISION ON PETITION
Filed: July 10, 2003	:	TO WITHDRAW
Attorney Docket No. **NAW0020US**	:	FROM RECORD
	:	

This is a decision on the Request to Withdraw as attorney or agent of record under 37 C.F.R. § 1.36(b), filed March 13, 2009.

The request is **NOT APPROVED** because it is moot.

A review of the file record indicates that the power of attorney to LEE & MORSE, P.C. has been revoked by the assignee of the patent application on May 13, 2009. Accordingly, the request to withdraw under 37 C.F.R. § 1.36(b) is moot.

All future communications from the Office will continue to be directed to the below-listed address until otherwise notified by applicant.

Telephone inquires concerning this decision should be directed to Tredelle Jackson at 571-272-2783.

Tredelle D. Jackson
Paralegal Specialist
Office of Petitions

cc: **CANTOR COLBURN, LLP**
20 CHURCH STREET
22ND FLOOR
HARTFORD CT 06103

UNITED STATES PATENT AND TRADEMARK OFFICE

UNITED STATES DEPARTMENT OF COMMERCE
United States Patent and Trademark Office
Address: COMMISSIONER FOR PATENTS
P.O. Box 1450
Alexandria, Virginia 22313-1450
www.uspto.gov

DARDI & HERBERT, PLLC
220 S. 6TH ST.
SUITE 2000, U.S. BANK PLAZA
MINNEAPOLIS, MN 55402

Mail Date: 04/21/2010

Applicant	: Amarpreet S. Sawhney	: DECISION ON REQUEST FOR
Patent Number	: 7648713	: RECALCULATION of PATENT
Issue Date	: 01/19/2010	: TERM ADJUSTMENT IN VIEW
Appliction No	: 10/616,055	: OF WYETH AND NOTICE OF INTENT TO
Filed	: 07/09/2003	: ISSUE CERTIFICATE OF CORRECTION
		:

The Request for Recalculation is **GRANTED** to the extent indicated.

The patent term adjustment has been determined to be **1732** days. The USPTO will *sua sponte* issue a certificate of correction reflecting the amount of PTA days determined by the recalculation.

Prior to the issuance of the certificate of correction, the USPTO will afford patentee an opportunity to be heard and request reconsideration. Accordingly, patentee has **one month or thirty (30) days**, whichever is longer, to file a request for reconsideration of this patent term adjustment calculation. See 35 U.S.C. 154(b)(3)(B)(ii) and 37 CFR 1.322(a)(4). No extensions of time will be granted under 37 CFR 1.136.

Patentee should use document code PET.OP if electronically filing a request for reconsideration of this patent term adjustment calculation. The patentee must also include the information required by 37 CFR 1.705(b)(2) and the fee required by 37 CFR 1.18(e). If patentee does not file a timely request for reconsideration of this patent term adjustment calculation including the information required by 37 CFR 1.705(b)(2) and the fee required by 37 CFR 1.18(e), the USPTO will issue a certificate of correction reflecting the PTA determination noted above.

Patentee should be aware that in order to preserve the right to review in the United States District Court for the District of Columbia of the USPTO patent term adjustment determination, patentee must ensure that he or she also take the steps required under 35 U.S.C. 154(b)(4)(A) in a timely manner. Nothing in the request for recalculation should be construed as providing an alternative time frame for commencing a civil action under 35 U.S.C. 154(b)(4)(A).

Any questions concerning this decision should be directed to the Office of Patent Legal Administration at 571-272-7702.

UNITED STATES PATENT AND TRADEMARK OFFICE

COMMISSIONER FOR PATENTS
UNITED STATES PATENT AND TRADEMARK OFFICE
P.O. BOX 1450
ALEXANDRIA, VA 22313-1450
www.uspto.gov

Kenyon & Kenyon
333 W. San Carlos Street
Suite 600
San Jose, CA 95110

COPY MAILED

NOV 1 5 2004

OFFICE OF PETITIONS

In re Application of	:	
Stephn H. Zalewski, et al.	:	
Application No. 10/616,079	:	DECISION GRANTING PETITION
Filed: July 8, 2003	:	UNDER 37 CFR 1.137(b)
Attorney Docket No. 12745/3	:	

This is a decision on the petition, filed August 30, 2004, which is being treated as a petition under 37 CFR 1.137(b) to revive the instant nonprovisional application for failure to timely notify the U.S. Patent and Trademark (USPTO) of the filing of an application in a foreign country, or under a multinational treaty that requires publication of applications eighteen months after filing. *See* 37 CFR 1.137(f).

The petition is **GRANTED**.

Petitioner states that the instant nonprovisional application is the subject of an application filed in an eighteen-month publication country on July 1, 2004. However, the USPTO was unintentionally not notified of this filing within 45 days subsequent to the filing of the subject application in an eighteen-month publication country.

In view of the above, this application became abandoned pursuant to 35 U.S.C. § 122(b)(2)(B)(iii) and 37 CFR 1.213(c) for failure to timely notify the Office of the filing of an application in a foreign country or under a multilateral international agreement that requires publication of applications 18 months after filing.

A petition to revive an application abandoned pursuant to 35 U.S.C. 122(b)(2)(B)(iii) for failure to notify the USPTO of a foreign filing must be accompanied by:

(1) the required reply which is met by the notification of such filing in a foreign country or under a multinational treaty;
(2) the petition fee as set forth in 37 CFR 1.17(m); and
(3) a statement that the entire delay in filing the required reply from the due date of the reply until the filing of a grantable petition was unintentional.

The instant petition has been found to be in compliance with 37 CFR 1.137(b). Accordingly, the failure to timely notify the USPTO of a foreign or international filing within 45 days after the date of filing of such foreign or international application as provided by 35 U.S.C. § 122(b)(2)(B)(iii) and 37 CFR 1.213(c) is accepted as having been unintentionally delayed.

The previous Request and Certification under 35 U.S.C. § 122(b)(2)(B)(i) has been rescinded.

Telephone inquiries concerning this decision should be directed to the undersigned at (571) 272-3223.

This application is being referred to Technology Center Art Unit 2600 for examination in due course.

Marianne E. Jenkins

Marianne E. Jenkins
Petitions Examiner
Office of Petitions
Office of the Deputy Commissioner
for Patent Examination Policy

UNITED STATES PATENT AND TRADEMARK OFFICE

UNITED STATES DEPARTMENT OF COMMERCE
United States Patent and Trademark Office
Address: COMMISSIONER FOR PATENTS
P.O. Box 1450
Alexandria, Virginia 22313-1450
www.uspto.gov

MERCK
P O BOX 2000
RAHWAY, NJ 07065-0907

Mail Date: 06/04/2010

Applicant	: Stephen Hamilton	: DECISION ON REQUEST FOR
Patent Number	: 7625756	: RECALCULATION of PATENT
Issue Date	: 12/01/2009	: TERM ADJUSTMENT IN VIEW
Application No	: 10/616,082	: OF WYETH AND NOTICE OF INTENT TO
Filed	: 07/08/2003	: ISSUE CERTIFICATE OF CORRECTION
		:

The Request for Recalculation is **GRANTED** to the extent indicated.

The patent term adjustment has been determined to be **519** days. The USPTO will *sua sponte* issue a certificate of correction reflecting the amount of PTA days determined by the recalculation.

Prior to the issuance of the certificate of correction, the USPTO will afford patentee an opportunity to be heard and request reconsideration. Accordingly, patentee has **one month or thirty (30) days**, whichever is longer, to file a request for reconsideration of this patent term adjustment calculation. See 35 U.S.C. 154(b)(3)(B)(ii) and 37 CFR 1.322(a)(4). No extensions of time will be granted under 37 CFR 1.136.

Patentee should use document code PET.OP if electronically filing a request for reconsideration of this patent term adjustment calculation. The patentee must also include the information required by 37 CFR 1.705(b)(2) and the fee required by 37 CFR 1.18(e). If patentee does not file a timely request for reconsideration of this patent term adjustment calculation including the information required by 37 CFR 1.705(b)(2) and the fee required by 37 CFR 1.18(e), the USPTO will issue a certificate of correction reflecting the PTA determination noted above.

Patentee should be aware that in order to preserve the right to review in the United States District Court for the District of Columbia of the USPTO patent term adjustment determination, patentee must ensure that he or she also take the steps required under 35 U.S.C. 154(b)(4)(A) in a timely manner. Nothing in the request for recalculation should be construed as providing an alternative time frame for commencing a civil action under 35 U.S.C. 154(b)(4)(A).

Any questions concerning this decision should be directed to the Office of Patent Legal Administration at 571-272-7702.

UNITED STATES PATENT AND TRADEMARK OFFICE

MAY - 8 2007

MAY - 8 2007

Commissioner for Patents
United States Patent and Trademark Office
P.O. Box 1450
Alexandria, VA 22313-1450
www.uspto.gov

BOZICEVIC, FIELD & FRANCIS LLP
1900 UNIVERSITY AVENUE
SUITE 200
EAST PALO ALTO CA 94303

In re Application of	:
Luo et al.	:
Serial No.: 10/616,101	: PETITION DECISION
Filed: July 8, 2003	:
Attorney Docket No.: RIGL-010CIP3	:

This is in response to the petition under 37 CFR § 1.181, filed February 26, 2007, requesting that the finality of the Office action of January 5, 2007 be withdrawn.

BACKGROUND

The examiner mailed a non-final Office action on May 26, 2006, setting a three month shortened statutory period for reply. In this action, claims 38-44 were rejected under 35 U.S.C. 112, second paragraph as being indefinite and rejected under 35 U.S.C. 112, first paragraph as containing subject matter which was not described in the specification and for being non-enabling. Claims 38-40 and 42 were rejected under 35 U.S.C. 102 (b) as being anticipated by Simonin et al., and claims 41, and 43-44 were rejected under 35 U.S.C. 103 (a) as being unpatentable over Simonin et al., and further in view of Smith et al. and the common knowledge in the art.

In response to the non-final Office action of May 26, 2006, applicants amended claims 38-41 and 44. Applicants also argued the rejections set forth in the action.

The examiner mailed a final Office action on January 5, 2007, setting a three month shortened statutory period for reply. In this Office action, claims 38-40 and 42 were rejected under 35 U.S.C. 102 (e) as anticipated over Christenson et al., Daly et al., Geron Corp, or Berthelsen et al. Claims 41, and 43-44 were also rejected under 35 U.S.C. 103 (a) as unpatentable over any one of Christenson et al., Daly et al., Geron Corp, or Berthelsen et al., and further in view of Smith et al. and the common knowledge in the art. The rejection of claims 38-44 under 35 U.S.C. 112, first and second paragraph was withdrawn.

In response thereto, applicants filed this petition on February 26, 2007, requesting that the finality of the Office action of January 5, 2007 be withdrawn.

DISCUSSION

Applicants argue the Office action of January 5, 2007, sets forth four new grounds of rejections under 35 U.S.C. 102 (e) and is, thus, improperly final. Specifically, applicants point out the examiner states that the Office action is final because "Applicants' amendment necessitated the new ground(s) of rejection presented in this Office Action." Applicants acknowledge that the claims were amended but disagrees that the amended claims triggered the new grounds of rejection.

Applicants' argument is not persuasive. The claims filed on August 28, 2006 in response to the first Office action were essentially drawn to any composition comprising any recombinant tankyrase H protein and were not limited to any specific SEQ ID NO. Because the original claims were not limited to any specific SEQ ID NO, the examiner's search of the non-sequence database itself yielded the best available prior art. Because applicant did not include specific SEQ ID NO in the claims, it did not require the examiner to initiate the search for a SEQ ID on sequence databases. As stated above, the examiner used the best available prior art for those claims, under 35 USC 102(b), which placed a statutory bar, in order to reject those claims. In response to that rejection, applicants amended the claims to recite specific SEQ ID NO which also overcame the rejection under 35 USC 102(b). The inclusion of the specific SEQ ID NO in the amended claims triggered a new search of the sequence databases which yielded the new references that the examiner used to reject those claims. Applicants could have presented the SEQ ID NO in the claims before the examiner issued the first non-final rejection. In view of the above, the Office action of January 5, 2007 was properly made final.

DECISION

The petition is **DENIED**. Any new or renewed petition must be filed within TWO MONTHS of the mail date of this decision.

Should there be any questions about this decision please contact Marianne C. Seidel, by letter addressed to Director, TC 1600, at the address listed above, or by telephone at 571-272-0584 or by facsimile sent to the general Office facsimile number, 703-872-9306.

Bruce Kisliuk
Director, Technology Center 1600

UNITED STATES PATENT AND TRADEMARK OFFICE

Commissioner for Patents
United States Patent and Trademark Office
P.O. Box 1450
Alexandria, VA 22313-1450
www.uspto.gov

JJGJr: 09-05

Paper No: __

FOLEY AND LARDNER
SUITE 500
3000 K STREET NW
WASHINGTON DC 20007

COPY MAILED

SEP 12 2005

OFFICE OF PETITIONS

In re Application of	:	
Wayburn, et al.	:	
Application No. 10/616,106	:	DECISION
Filed: 9 July, 2003	:	
Attorney Docket No.: 047589-0192	:	

This is a decision on the petition, filed 10 August, 2005, to revive the instant nonprovisional application under the provisions of 37 C.F.R. §1.137(f).

The petition is **GRANTED**.

Petitioner states that the instant nonprovisional application is the subject of an application filed in a foreign country or otherwise requiring publication on 16 March, 2004. Moreover, Petitioner submitted the instant petition (with recision request) 10 August, 2005, upon learning of the error.

Thus, Petitioner alleges unintentional failure to notify the U.S. Patent and Trademark Office of this filing of the subject application in a foreign country within 45 days of that filing.

In view of the above, this application became abandoned pursuant to 35 U.S.C. §122(b)(2)(B)(iii) and 37 C.F.R. §1.213(c) for failure to timely notify the Office of the filing of an application in a foreign country, or under a multilateral international agreement, that requires publication of applications 18 months after filing.

A petition under 37 C.F.R. §1.137(f) must be accompanied by:

(1) the reply--which is met by the notification of such filing in a foreign country or under a multinational treaty;

(2) the petition fee as set forth in 37 C.F.R. §1.17(m); and

(3) a statement that the entire delay in filing the required reply from the due date of the reply until the filing of a grantable petition was unintentional.

The instant petition has been found to be in compliance with 37 C.F.R. §1.137(f). Accordingly, the failure to timely notify the Office of a foreign or international filing within 45 days after the date of filing of such foreign or international application as provided by 35 U.S.C. §122(b)(2)(B)(iii) and 37 C.F.R. §1.213(c) is accepted as having been unintentionally delayed.

The previous Request and Certification under 35 U.S.C. §122(b)(2)(B)(I) has been rescinded. A Notice Regarding Rescission of Nonpublication Request, which sets forth the projected publication date of 22 December, 2005, accompanies this decision.

This application is being released to Technology Center 2800 for further processing in due course.

Inquiries concerning this decision may be directed to the undersigned at (571) 272-3214.

John J. Gillon, Jr.
Senior Attorney
Office of Petitions

ATTACHMENT: Notice Regarding Rescission of Nonpublication Request

UNITED STATES PATENT AND TRADEMARK OFFICE

COMMISSIONER FOR PATENTS
UNITED STATES PATENT AND TRADEMARK OFFICE
P.O. BOX 1450
ALEXANDRIA, VA 22313-1450
www.uspto.gov

SPRINKLE IP LAW GROUP
1301 W. 25TH STREET
SUITE 408
AUSTIN, TX 78705

COPY MAILED

FEB 10 2005

OFFICE OF PETITIONS

In re Application of :
Brethour et al. :
Application No. 10/616,118 :
Filed: July 9, 2003 :
Attorney Docket No. ALER1560 :

This is a decision in response to the Petition to revive the above-identified application under 37 CFR 1.137(b), filed December 27, 2004, to revive the above-identified application.

This Petition is hereby **granted**.

The above-identified application became abandoned for failure to timely and properly reply to the Notice to File Corrected Application Papers (hereinafter "Notice"), mailed October 9, 2003, which set a two (2) month period for reply. No response having been received, the application became abandoned on December 9, 2003. A Notice of Abandonment was mailed on October 19, 2004.

With the instant petition, Petitioner has satisfied the requirements of a grantable petition under 37 CFR 1.137(b). The reply to the October 9, 2003 Notice is filed with the instant petition. Accordingly, the petition is granted.

This application is being referred to the Office of Initial Patent Examination for continued processing in due course.

Telephone inquiries concerning this matter should be directed to the undersigned at (571) 272-3232.

Derek I. Woods
Attorney/Advisor
Office of Petitions

UNITED STATES PATENT AND TRADEMARK OFFICE

Commissioner for Patents
United States Patent and Trademark Office
P.O. Box 1450
Alexandria, VA 22313-1450
www.uspto.gov

KING AND SPALDING LLP
1700 PENNSYLVANIA AVE, NW
SUITE 200
WASHINGTON DC 20006

MAILED

MAY 07 2009

OFFICE OF PETITIONS

In re Application of	:	
LING, Marvin T.	:	
Application No. 10/616,124	:	DECISION ON PETITION
Filed: July 08, 2003	:	TO WITHDRAW
Attorney Docket No. **PBC0005**	:	FROM RECORD
	:	

This is a decision on the Request to Withdraw as attorney or agent of record under 37 C.F.R. § 1.36(b), filed April 13, 2009.

The request is **APPROVED**.

A grantable request to withdraw as attorney/agent of record must be signed by every attorney/agent seeking to withdraw or contain a clear indication that one attorney is signing on behalf of another/others. The Office requires the practitioner(s) requesting withdrawal to certify that he, she, or they have: (1) given reasonable notice to the client, prior to the expiration of the response period, that the practitioner(s) intends to withdraw from employment; (2) delivered to the client or a duly authorized representative of the client all papers and property (including funds) to which the client is entitled; and (3) notified the client of any responses that may be due and the time frame within which the client must respond, pursuant 37 CFR 10.40(c).

The request was signed by Dawn-Marie Bey on behalf of all attorneys of record who are associated with customer No. 74877. All attorneys/agents associated with the Customer Number 74877 have been withdrawn. Applicant is reminded that there is no attorney of record at this time.

The request to change the correspondence address of record is not acceptable as the requested correspondence address is not that of: (1) the first named signing inventor; or (2) an intervening assignee of the entire interest under 37 C.F.R 3.71. All future communications from the Office will be directed to the first named signing inventor or the assignee of the entire interest at the first copied address below until otherwise properly notified by the applicant.

There is an outstanding Office action mailed February 13, 2009 that requires a reply from the applicant.

Telephone inquiries concerning this decision should be directed to Tredelle Jackson at 571-272-2783.

Tredelle D. Jackson
Paralegal Specialist
Office of Petitions

cc: **MARVIN T. LING**
7676 EAST TUCKEY LANE
SCOTTSDALE AZ 85250

cc: **SCOTT R. SAFRON**
1941 SUMTER RIDGE COURT
CHESTERFIELD, MO 63017

UNITED STATES PATENT AND TRADEMARK OFFICE

Commissioner for Patents
United States Patent and Trademark Office
P.O. Box 1450
Alexandria, VA 22313-1450
www.uspto.gov

KENYON & KENYON
Suite 600
333 W. San Carlos, Street
San Jose, CA 95110-2711

COPY MAILED

OCT 14 2004

OFFICE OF PETITIONS

In re Application of
Stephen H. Zalewski, et al.
Application No. 10/616,131
Filed: July 8, 2003
Attorney Docket No. 12745/1

DECISION GRANTING PETITION
UNDER 37 CFR 1.137(b)

This is a decision on the petition, filed August 30, 2004, which is being treated as a petition under 37 CFR 1.137(b) to revive the instant nonprovisional application for failure to timely notify the U.S. Patent and Trademark (USPTO) of the filing of an application in a foreign country, or under a multinational treaty that requires publication of applications eighteen months after filing. *See* 37 CFR 1.137(f).

The petition is **GRANTED**.

Petitioner states that the instant nonprovisional application is the subject of an application filed in an eighteen month publication country on July 1, 2004. However, the USPTO was unintentionally not notified of this filing within 45 days subsequent to the filing of the subject application in an eighteen month publication country.

In view of the above, this application became abandoned pursuant to 35 U.S.C. §122(b)(2)(B)(iii) and 37 CFR 1.213(c) for failure to timely notify the Office of the filing of an application in a foreign country or under a multilateral international agreement that requires publication of applications 18 months after filing.

A petition to revive an application abandoned pursuant to 35 U.S.C. § 122(b)(2)(B)(iii) for failure to notify the USPTO of a foreign filing must be accompanied by:

(1) the required reply which is met by the notification of such filing in a foreign country or under a multinational treaty;
(2) the petition fee as set forth in 37 CFR 1.17(m); and
(3) a statement that the entire delay in filing the required reply from the due date of the reply until the filing of a grantable petition was unintentional.

The instant petition has been found to be in compliance with 37 CFR 1.137(b). Accordingly, the failure to timely notify the USPTO of a foreign or international filing within 45 days after the date of filing of such foreign or international application as provided by 35 U.S.C. § 122(b)(2)(B)(iii) and 37 CFR 1.213(c) is accepted as having been unintentionally delayed.

Any inquiries concerning this decision may be directed to Sherry D. Brinkley at (571) 272-3204.

This application is being referred to Technology Center Art Unit 2672 for examination in due course.

Sherry D. Brinkley
Petitions Examiner
Office of Petitions
Office of the Deputy Commissioner
for Patent Examination Policy

UNITED STATES PATENT AND TRADEMARK OFFICE

Commissioner for Patents
United States Patent and Trademark Office
P.O. Box 1450
Alexandria, VA 22313-1450
www.uspto.gov

COPY MAILED

DEC 29 2009

OFFICE OF PETITIONS

PORTER WRIGHT MORRIS & ARTHUR, LLP
INTELLECTUAL PROPERTY GROUP
41 SOUTH HIGH STREET
28TH FLOOR
COLUMBUS OH 43215

In re Application of	:	
Daniel J. Turk et al	:	
Application No. 10/616,140	:	DECISION ON PETITION
Filed: July 9, 2003	:	
Attorney Docket No. 3994994-14415	:	

This is a decision on the petition under the unintentional provisions of 37 CFR 1.137(b), filed September 21, 2009, to revive the above-identified application.

The petition is **GRANTED**.

The petition satisfies the conditions for revival pursuant to the provisions of 37 CFR 1.137(b) in that (1) the reply in the form of an RCE and an amendment; (2) the petition fee; and (3) the required statement of unintentional delay have been received. Accordingly, the reply to the final rejection mailed May 28, 2008, is accepted as having been unintentionally delayed.

An extension of time under 37 CFR 1.136 must be filed prior to the expiration of the maximum extendable period for reply. *See* In re Application of S., 8 USPQ2d 1630, 1631 (Comm'r Pats. 1988). Since the $1,110 extension of time fee submitted with the petition on September was subsequent to the maximum extendable period for reply, this fee is unnecessary. Petitioner may request a refund of the extension fee by writing to the Office of Finance, Refund Section. A copy of this decision should accompany the request.

Telephone inquiries concerning this decision should be directed to the undersigned at (571) 272-3208.

This application is being referred to Technology Center AU 2123 for appropriate action by the Examiner in the normal course of business on the reply received September 21, 2009.

/KOC/
Karen Creasy
Petitions Examiner
Office of Petitions

UNITED STATES PATENT AND TRADEMARK OFFICE

UNITED STATES DEPARTMENT OF COMMERCE
United States Patent and Trademark Office
Address: COMMISSIONER FOR PATENTS
P.O. Box 1450
Alexandria, Virginia 22313-1450
www.uspto.gov

QUALCOMM INCORPORATED
5775 MOREHOUSE DR.
SAN DIEGO, CA 92121

Mail Date: 06/17/2010

Applicant	: Rajiv Laroia	: DECISION ON REQUEST FOR
Patent Number	: 7639728	: RECALCULATION of PATENT
Issue Date	: 12/29/2009	: TERM ADJUSTMENT IN VIEW
Application No	: 10/616,143	: OF WYETH AND NOTICE OF INTENT TO
Filed	: 07/08/2003	: ISSUE CERTIFICATE OF CORRECTION
		:

The Request for Recalculation is **GRANTED** to the extent indicated.

The patent term adjustment has been determined to be **1716** days. The USPTO will *sua sponte* issue a certificate of correction reflecting the amount of PTA days determined by the recalculation.

Prior to the issuance of the certificate of correction, the USPTO will afford patentee an opportunity to be heard and request reconsideration. Accordingly, patentee has **one month or thirty (30) days**, whichever is longer, to file a request for reconsideration of this patent term adjustment calculation. See 35 U.S.C. 154(b)(3)(B)(ii) and 37 CFR 1.322(a)(4). No extensions of time will be granted under 37 CFR 1.136.

Patentee should use document code PET.OP if electronically filing a request for reconsideration of this patent term adjustment calculation. The patentee must also include the information required by 37 CFR 1.705(b)(2) and the fee required by 37 CFR 1.18(e). If patentee does not file a timely request for reconsideration of this patent term adjustment calculation including the information required by 37 CFR 1.705(b)(2) and the fee required by 37 CFR 1.18(e), the USPTO will issue a certificate of correction reflecting the PTA determination noted above.

Patentee should be aware that in order to preserve the right to review in the United States District Court for the District of Columbia of the USPTO patent term adjustment determination, patentee must ensure that he or she also take the steps required under 35 U.S.C. 154(b)(4)(A) in a timely manner. Nothing in the request for recalculation should be construed as providing an alternative time frame for commencing a civil action under 35 U.S.C. 154(b)(4)(A).

Any questions concerning this decision should be directed to the Office of Patent Legal Administration at 571-272-7702.

UNITED STATES PATENT AND TRADEMARK OFFICE

Commissioner for Patents
United States Patent and Trademark Office
P.O. Box 1450
Alexandria, VA 22313-1450
www.uspto.gov

JOHN DASH PH. D
PHYSICS DEPT
PORTLAND STATE UNIVERSITY
PO BOX 751
PORTLAND OR 97207-0751

COPY MAILED
NOV 25 2008

In re Application of	:	
John Dash	:	
Application No. 10/616,165	:	ON PETITION
Filed: July 7, 2003	:	

This is a decision on the portion of the petition, filed July 21, 2008, related to the abandonment of the application, which is being treated as a petition under 37 CFR 1.181 (no fee) requesting withdrawal of the holding of abandonment in the above-identified application. The request for reclusal of persons associated with the subject matter and aspects of the above-identified application will be addressed separate from this petition decision by the Technology Center Director.

The petition to withdraw the abandonment is **DISMISSED**.

Any request for reconsideration of this decision should be submitted within two (2) months from the mail date of this decision and be entitled "Renewed Petition to Withdraw the Holding of Abandonment under 37 CFR 1.181." *See* 37 CFR 1.181(f).

On October 15, 2007, the Office mailed a requirement for an election of species, which set a one month shortened statutory period to reply. A Request for Suspension of Period of Reply was filed November 5, 2007 and included remarks directed to the election requirement. On March 12, 2008, the Office informed applicant that the Request for Suspension of Period of Reply was denied as improper. Applicant then requested reclusal of persons associated with the subject matter and aspects of the above-identified application through a letter filed May 5, 2008. On June 18, 2008, the Office mailed a Notice of Abandonment.

In the present petition, petitioner asserts that the required election was made within the Request for Suspension of Period of Reply filed November 5, 2007. This assertion is construed as a request that the Office withdraw the holding of abandonment since, allegedly, the reply was timely filed.

DISCUSSION OF PETITION TO WITHDRAW THE HOLDING OF ABANDONMENT

Where an applicant contends that the application is not in fact abandoned (e.g., there is disagreement as to the sufficiency of the reply, or as to controlling dates), a petition under 37 CFR 1.181(a) requesting withdrawal of the holding of abandonment is the appropriate course of action, and such petition does not require a fee. See the Manual of Patent Examining Procedure (MPEP) 711.03(c)(I). Such a petition may be granted where the petition provides sufficient evidence to establish that a reply to an office action, such as the election requirement mailed October 15, 2007, was mailed or filed by the applicants.

In this case, applicant was required to first elect between species A, wherein the electrolyte is heated only, and species B, wherein the electrolyte is both heated and caused to become radioactive. See section "2" of the requirement mailed October 15, 2007. Then, after election of either species A or species B, applicant was further required to elect a single species of the cathode material. See section "3" of the requirement mailed October 15, 2007. Applicant was also advised that

> "**the reply to this requirement to be complete <u>must</u> include (i) an election of a species to be examined** even though the requirement may *be traversed* (37 CFR 1.143) **and (ii) identification of the claims encompassing the elected species**, including any claims subsequently added. An argument that a claim is allowable or that all claims are generic is considered nonresponsive unless accompanied by an election." [emphasis in original]

The election requirement was addressed on pages 5 and 6 of the Request for Suspension of Period of Reply filed November 5, 2007. In particular, the portion of that request that petitioner asserts satisfied the election requirement states:

> "So as to avoid an improper claim of abandonment an election of whatever the Offices considered to be the species of claim 13 is elected and is traversed for the reasons indicated herein. So as to avoid any further questions of whether or not this document is responsive it is noted that considered claims 14 to 20, inclusive are dependent under claim 13 and, hence, if claim 13 is held to in fact relate to a species they also relate to this same species. Claim 21 in substance merely adds to claim 13. Under the circumstances how can it relate to a different species, particularly when the specification makes it clear that during the operation of he process both heat and radioactivity are concurrently produced as the process is carried out?"

This statement in the Suspension of Period of Reply filed November 5, 2007 is not a proper election. Applicant was required to elect between a species in which the electrolyte is heated only and a species in which the electrolyte is both heated and caused to become radioactive, and not elect between claims. The statement that "the species of claim 13 is elected" does not satisfy this requirement even though a claim was parenthetically referenced in the election requirement. Moreover, a second election was then required of a single species of the cathode material, but this second election was not provided. Applicant indicated that "if claim 13 is held to in fact relate to a species [claims 14-20] also relate to this same species." While this statement

identifies claims encompassed by claim 13, it does not identify an elected species of cathode material. At best, this statement could be construed as an argument that claims 14-20 are generic, which is considered non-responsive when not accompanied by an election. Accordingly, the application became abandoned on November 16, 2007, one month after the mailing of the election requirement. This abandonment occurred as a matter of law for failure to timely and properly respond to the Notice. Abandonment did not occure at the discretion of the examiner.

ALTERNATIVE VENUE

Where there is no dispute as to whether an application is abandoned (e.g., the applicant's contentions merely involve the cause of abandonment), a petition under 37 CFR 1.137 (accompanied by the appropriate petition fee) is necessary to revive the abandoned application. See the MPEP 711.03(c)(I).

Petitioner is encouraged to consider filing a petition under 37 CFR 1.137(b) to revive an unintentionally abandoned application instead of filing a renewed petition under 37 CFR 1.181 or a petition under 37 CFR 1.137(a).

For a utility application filed on or after June 8, 1995, such as the present application, a grantable petition pursuant to 37 CFR 1.137(b) must be accompanied by:

(1) The reply, in the form of a proper election, required to the outstanding Office action;

(2) The petition fee as set forth in 37 CFR 1.17(m) (currently **$810.00** for a small entity); and

(3) A statement that the entire delay in filing the required reply from the due date for the reply until the filing of a grantable petition was unintentional. The Director may require additional information where there is a question whether the delay was unintentional.

A form for filing a petition to revive an unintentionally abandoned application accompanies this decision for petitioner's convenience. If petitioner desires to file a petition under 37 CFR 1.137(b) instead of filing a request for reconsideration of the petition under 37 CFR 1.181, petitioner must complete the enclosed petition form (PTO/SB/64) and pay the $810.00 petition fee.

Further correspondence with respect to this matter should be addressed as follows:

By mail: Mail Stop Petition
Commissioner for Patents
P.O. Box 1450
Alexandria, VA 22313-1450

By FAX: (571) 273-8300
Attn: Office of Petitions

By hand: Customer Service Window
Randolph Building
401 Dulany Street
Alexandria, VA 22314

Telephone inquiries related to this decision may be directed to Christopher Bottorff at (571) 272-6692.

David Bucci
Petitions Examiner
Office of Petitions

Enclosures: Form PTO/SB/64, Petition For Revival Of An Application For Patent Abandoned Unintentionally Under 37 CFR 1.137(b).

PTO/SB/64 (10-08)
Approved for use through 11/30/2008. OMB 0651-0031
U.S. Patent and Trademark Office; U.S. DEPARTMENT OF COMMERCE
Under the Paperwork Reduction Act of 1995, no persons are required to respond to a collection of information unless it displays a valid OMB control number.

PETITION FOR REVIVAL OF AN APPLICATION FOR PATENT ABANDONED UNINTENTIONALLY UNDER 37 CFR 1.137(b)

Docket Number (Optional)

First named inventor:

Application No.: Art Unit:

Filed: Examiner:

Title:

Attention: Office of Petitions
Mail Stop Petition
Commissioner for Patents
P.O. Box 1450
Alexandria, VA 22313-1450
FAX (571) 273-8300

NOTE: If information or assistance is needed in completing this form, please contact Petitions Information at (571) 272-3282.

The above-identified application became abandoned for failure to file a timely and proper reply to a notice or action by the United States Patent and Trademark Office. The date of abandonment is the day after the expiration date of the period set for reply in the office notice or action plus an extensions of time actually obtained.

APPLICANT HEREBY PETITIONS FOR REVIVAL OF THIS APPLICATION

NOTE: A grantable petition requires the following items:
(1) Petition fee;
(2) Reply and/or issue fee;
(3) Terminal disclaimer with disclaimer fee - required for all utility and plant applications filed before June 8, 1995; and for all design applications; and
(4) Statement that the entire delay was unintentional.

1. Petition fee

☐ Small entity-fee $ _____ (37 CFR 1.17(m)). Applicant claims small entity status. See 37 CFR 1.27.

☐ Other than small entity – fee $ _____ (37 CFR 1.17(m))

2. Reply and/or fee

A. The reply and/or fee to the above-noted Office action in the form of _____(identify type of reply):

☐ has been filed previously on _____.
☐ is enclosed herewith.

B. The issue fee and publication fee (if applicable) of $ _____.

☐ has been paid previously on _____.
☐ is enclosed herewith.

This collection of information is required by 37 CFR 1.137(b). The information is required to obtain or retain a benefit by the public which is to file (and by the USPTO to process) an application. Confidentiality is governed by 35 U.S.C. 122 and 37 CFR 1.11 and 1.14. This collection is estimated to take 1.0 hour to complete, including gathering, preparing, and submitting the completed application form to the USPTO. Time will vary depending upon the individual case. Any comments on the amount of time you require to complete this form and/or suggestions for reducing this burden, should be sent to the Chief Information Officer, U.S. Patent and Trademark Office, U.S. Department of Commerce, P.O. Box 1450, Alexandria, VA 22313-1450. DO NOT SEND FEES OR COMPLETED FORMS TO THIS ADDRESS. **SEND TO: Mail Stop Petition, Commissioner for Patents, P.O. Box 1450, Alexandria, VA 22313-1450.**

If you need assistance in completing the form, call 1-800-PTO-9199 and select option 2.

Under the Paperwork Reduction Act of 1995, no persons are required to respond to a collection of information unless it displays a valid OMB control number.

3. Terminal disclaimer with disclaimer fee

☐ Since this utility/plant application was filed on or after June 8, 1995, no terminal disclaimer is required.

☐ A terminal disclaimer (and disclaimer fee (37 CFR 1.20(d)) of $ _____ for a small entity or $ _____ for other than a small entity) disclaiming the required period of time is enclosed herewith (see PTO/SB/63).

4. STATEMENT: The entire delay in filing the required reply from the due date for the required reply until the filing of a grantable petition under 37 CFR 1.137(b) was unintentional. [NOTE: The United States Patent and Trademark Office may require additional information if there is a question as to whether either the abandonment or the delay in filing a petition under 37 CFR 1.137(b) was unintentional (MPEP 711.03(c), subsections (III)(C) and (D)).]

WARNING:

Petitioner/applicant is cautioned to avoid submitting personal information in documents filed in a patent application that may contribute to identity theft. Personal information such as social security numbers, bank account numbers, or credit card numbers (other than a check or credit card authorization form PTO-2038 submitted for payment purposes) is never required by the USPTO to support a petition or an application. If this type of personal information is included in documents submitted to the USPTO, petitioners/applicants should consider redacting such personal information from the documents before submitting them to the USPTO. Petitioner/applicant is advised that the record of a patent application is available to the public after publication of the application (unless a non-publication request in compliance with 37 CFR 1.213(a) is made in the application) or issuance of a patent. Furthermore, the record from an abandoned application may also be available to the public if the application is referenced in a published application or an issued patent (see 37 CFR 1.14). Checks and credit card authorization forms PTO-2038 submitted for payment purposes are not retained in the application file and therefore are not publicly available.

Signature	Date
Typed or printed name	Registration Number, if applicable
Address	Telephone Number
Address	

Enclosures:
- ☐ Fee Payment
- ☐ Reply
- ☐ Terminal Disclaimer Form
- ☐ Additional sheets containing statements establishing unintentional delay
- ☐ Other: _____

CERTIFICATE OF MAILING OR TRANSMISSION [37 CFR 1.8(a)]

I hereby certify that this correspondence is being:

☐ Deposited with the United States Postal Service on the date shown below with sufficient postage as first class mail in an envelope addressed to: Mail Stop Petition, Commissioner for Patents, P. O. Box 1450, Alexandria, VA 22313-1450.

☐ Transmitted by facsimile on the date shown below to the United States Patent and Trademark Office at (571) 273-8300.

Date	Signature
	Typed or printed name of person signing certificate

Privacy Act Statement

The **Privacy Act of 1974 (P.L. 93-579)** requires that you be given certain information in connection with your submission of the attached form related to a patent application or patent. Accordingly, pursuant to the requirements of the Act, please be advised that: (1) the general authority for the collection of this information is 35 U.S.C. 2(b)(2); (2) furnishing of the information solicited is voluntary; and (3) the principal purpose for which the information is used by the U.S. Patent and Trademark Office is to process and/or examine your submission related to a patent application or patent. If you do not furnish the requested information, the U.S. Patent and Trademark Office may not be able to process and/or examine your submission, which may result in termination of proceedings or abandonment of the application or expiration of the patent.

The information provided by you in this form will be subject to the following routine uses:

1. The information on this form will be treated confidentially to the extent allowed under the Freedom of Information Act (5 U.S.C. 552) and the Privacy Act (5 U.S.C 552a). Records from this system of records may be disclosed to the Department of Justice to determine whether disclosure of these records is required by the Freedom of Information Act.
2. A record from this system of records may be disclosed, as a routine use, in the course of presenting evidence to a court, magistrate, or administrative tribunal, including disclosures to opposing counsel in the course of settlement negotiations.
3. A record in this system of records may be disclosed, as a routine use, to a Member of Congress submitting a request involving an individual, to whom the record pertains, when the individual has requested assistance from the Member with respect to the subject matter of the record.
4. A record in this system of records may be disclosed, as a routine use, to a contractor of the Agency having need for the information in order to perform a contract. Recipients of information shall be required to comply with the requirements of the Privacy Act of 1974, as amended, pursuant to 5 U.S.C. 552a(m).
5. A record related to an International Application filed under the Patent Cooperation Treaty in this system of records may be disclosed, as a routine use, to the International Bureau of the World Intellectual Property Organization, pursuant to the Patent Cooperation Treaty.
6. A record in this system of records may be disclosed, as a routine use, to another federal agency for purposes of National Security review (35 U.S.C. 181) and for review pursuant to the Atomic Energy Act (42 U.S.C. 218(c)).
7. A record from this system of records may be disclosed, as a routine use, to the Administrator, General Services, or his/her designee, during an inspection of records conducted by GSA as part of that agency's responsibility to recommend improvements in records management practices and programs, under authority of 44 U.S.C. 2904 and 2906. Such disclosure shall be made in accordance with the GSA regulations governing inspection of records for this purpose, and any other relevant (*i.e.*, GSA or Commerce) directive. Such disclosure shall not be used to make determinations about individuals.
8. A record from this system of records may be disclosed, as a routine use, to the public after either publication of the application pursuant to 35 U.S.C. 122(b) or issuance of a patent pursuant to 35 U.S.C. 151. Further, a record may be disclosed, subject to the limitations of 37 CFR 1.14, as a routine use, to the public if the record was filed in an application which became abandoned or in which the proceedings were terminated and which application is referenced by either a published application, an application open to public inspection or an issued patent.
9. A record from this system of records may be disclosed, as a routine use, to a Federal, State, or local law enforcement agency, if the USPTO becomes aware of a violation or potential violation of law or regulation.

UNITED STATES PATENT AND TRADEMARK OFFICE

Commissioner for Patents
United States Patent and Trademark Office
P.O. Box 1450
Alexandria, VA 22313-1450
www.uspto.gov

COPY MAILED

JUN 25 2007

OFFICE OF PETITIONS

Sanders Hillis
Brinks Hofer Gilson & Lione
PO Box 10395
Chicago, Illinois 60610

In re Application of
Dennis et al.
Application No. 10/616,169
Filed: July 9, 2003
Attorney Docket NO. 11509/12

: DECISION HOLDING PTA REQUEST
:IN ABEYANCE UNTIL AFTER ISSUE
:DATE

This decision is in response to applicants' REQUEST FOR RECONSIDERATION OF PATENT TERM ADJUSTMENT PURSUANT TO 37 CFR 1.705(b) [1] timely filed on January 10, 2007 requesting that the Office adjust the PTA at the time of the mailing of the notice of allowance to at least 468 days.

The instant application for patent term adjustment requests reconsideration of the patent term adjustment as it relates to the Office's failure to issue the patent within 3 years of the filing date, a decision is being **held in abeyance** until after the actual patent date. Knowledge of the actual date the patent issues is required to calculate the amount, if any, of additional patent term patentee is entitled to for Office failure to issue the patent within 3 years. See § 1.703(b). It is noted that at the time of this decision, the patent has issued.

Applicants are given **TWO (2) MONTHS** from the issue date or **ONE** month from the date of this decision whichever is later to file a written request for reconsideration of the patent term adjustment for Office failure to issue the patent within 3 years. A copy of this decision should accompany the request. Applicants may seek such consideration without payment of an additional fee. However, as to all other bases for seeking reconsideration of the patent term adjustment indicated in the patent, all requirements of § 1.705(d) must be met. Requests for reconsideration on other bases must be timely filed and must include payment of the required fee.

Applicants are reminded that if an application is entitled to an adjustment under 35 U.S.C. 154(b)(1)(B), the entire period during which the application (except for periods excluded under 35 U.S.C. 154(b)(1)(B)(i)-(iii)), and not just the period beginning three years after the actual filing date of the application, is the period of delay under 35 U.S.C. 154(b)(1)(B) in determining whether periods of delay overlap under 35 U.S.C. 154(b)(2)(A). Thus, any days of delay for Office issuance of the patent more than 3 years after the filing date of the application which overlap with the days of patent term adjustment accorded prior to the issuance of the patent will not result in any additional patent term adjustment. See 35 U.S.C. 154(b)(1)(B), 35 U.S.C. 154(b)(2)(A), and 37 CFR § 1.703(f). See also *Revision of Patent Term Extension and Patent Term Adjustment Provisions*; *Final Rule*, 69 Fed. Reg. 21704 (April 22, 2004).

---

[1]Issue fee paid on Jan. 10, 2007

Rather than file the request for reconsideration of Patent Term Adjustment at the time of the mailing of the notice of allowance, applicants are advised that they may wait until the time of the issuance of the patent and file a request for reconsideration of the patent term pursuant to 37 CFR 1.705(d). The USPTO notes that it does not calculate the amount of time earned pursuant to 37 CFR 1.702(b) until the time of the issuance of the patent and accordingly, the Office will consider any request for reconsideration of the patent term adjustment due to an error in the calculation of 37 CFR 1.702(b) to be timely if the request for reconsideration is filed within two months of the issuance of the patent.

The Office has assessed the $200.00 fee required of this request. No additional fees are required in considering this matter.

Any questions should be directed to Kery A. Fries, Senior Legal Advisor, at 571-272-7757.

Kery A Fries

Kery Fries
Senior Legal Advisor
Office of Patent Legal Administration
Office of Deputy Commissioner
for Patent Examination Policy

UNITED STATES PATENT AND TRADEMARK OFFICE

Commissioner for Patents
United States Patent and Trademark Office
P.O. Box 1450
Alexandria, VA 22313-1450
www.uspto.gov

TRASK BRITT
P.O. BOX 2550
SALT LAKE CITY UT 84110

COPY MAILED

JUL 07 2006

OFFICE OF PETITIONS

ON PETITION

In re Application of :
Warren M. Farnworth :
Application No. 10/616,184 :
Filed: July 7, 2003 :
Attorney Docket No. 3393.8US (97-0324.08/US) :

This is a decision on the petition, filed June 27, 2006, under 37 CFR 1.313(c)(2) to withdraw the above-identified application from issue after payment of the issue fee.

The petition is **GRANTED.**

The above-identified application is withdrawn from issue for consideration of a submission under 37 CFR 1.114 (request for continued examination). See 37 CFR 1.313(c)(2).

Petitioner is advised that the issue fee paid on October 12, 2005, in the above-identified application cannot be refunded. If, however, the above-identified application is again allowed, petitioner may request that it be applied towards the issue fee required by the new Notice of Allowance.[1]

Telephone inquiries should be directed to the undersigned at (571) 272-3208.

The examiner of Technology Center AU 1725 will consider the request for continued examination under 37 CFR 1.114.

Karen Creasy

Karen Creasy
Petitions Examiner
Office of Petitions

---

[1] The request to apply the issue fee to the new Notice may be satisfied by completing and returning the new Issue Fee Transmittal Form PTOL-85(b), which includes the following language thereon: "Commissioner for Patents is requested to apply the Issue Fee and Publication Fee (if any) or re-apply any previously paid issue fee to the application identified above." Petitioner is advised that, whether a fee is indicated as being due or not, the Issue Fee Transmittal Form **must** be completed and timely submitted to avoid abandonment. Note the language in bold text on the first page of the Notice of Allowance and Fee(s) Due (PTOL-85).

SPE RESPONSE FOR CERTIFICATE OF CORRECTION

Paper No.: _____

DATE : 10-22-07

TO SPE OF : **Technology Center** 1725

10/616184

SUBJECT : Request for Certificate of Correction on Patent No.: 7159752 B2

A response is requested with respect to the accompanying request for a certificate of correction.

Please complete this form and return with file, within 7 days to:
Palm location **7580, Certificates of Correction Branch – South Tower – 9A22**
If response is for an IFW, **return to employee (named below) via PUBSCofC Team in MADRAS.**
With respect to the change(s) requested, correcting Office and/or Applicant's errors, should the patent read as shown in the certificate of correction (COCIN)? No new matter should be introduced, nor should the scope or meaning of the claims be changed.

Elisha Evans

Thank You For Your Assistance

Certificates of Correction Branch
Tel. No. 703-308-9390 EXT 110

The request for issuing the above-identified correction(s) is hereby:
Note your decision on the appropriate box.

- [x] **Approved** — **All** changes apply.
- [ ] **Approved in Part** — Specify below which changes **do not** apply.
- [ ] **Denied** — State the reasons for denial below.

Comments:

JONATHAN JOHNSON
SUPERVISORY PATENT EXAMINER

SPE

1793

Art Unit

UNITED STATES PATENT AND TRADEMARK OFFICE

Commissioner for Patents
United States Patent and Trademark Office
P.O. Box 1450
Alexandria, VA 22313-1450
www.uspto.gov

SEP 2 8 2004

DCM

In re Application of	:	
Paul Lawheed	:	
Serial Number: 10/616,200	:	PETITION UNDER
Filed: July 9, 2003	:	M.P.E.P.708.02 VI
For: IMPROVED FLAT PLATE PANEL SOLAR ELECTRIC	:	
GENERATORS AND METHODS	:	

This is in response to the petition filed October 7, 2003, requesting that the above-identified application be granted Special Status under Section 708.02 VI of the MPEP and 37 CFR 1.102(c) (**no fee required**).

The request for Special Status considered under Section 708.02 VI is granted because criteria under 37 CFR 1.102(c) has been met.

Accordingly the petition is **GRANTED.**

Marian C. Knode

Marian C. Knode, Special Programs Examiner
Technology Center 1700
Chemical and Materials Engineering

Mr. Lynn G. Foster
602 E. 300 S.
Salt Lake City UT 84102

UNITED STATES PATENT AND TRADEMARK OFFICE

Commissioner for Patents
United States Patent and Trademark Office
P.O. Box 1450
Alexandria, VA 22313-1450
www.uspto.gov

HARNESS, DICKEY & PIERCE PLC
P. O. BOX 828
BLOOMFIELD HILLS, MI 48303

COPY MAILED

JUL 03 2007

OFFICE OF PETITIONS

In re Application of	:	
Susumu Kawashima	:	
Application No. 10/616,202	:	DECISION GRANTING PETITION
Filed: July 9, 2003	:	UNDER 37 CFR 1.313(c)(2)
Attorney Docket No. 2552-000044	:	

This is a decision on the petition, filed July 2, 2007, under 37 CFR 1.313(c)(2) to withdraw the above-identified application from issue after payment of the issue fee.

The petition is **GRANTED**.

The above-identified application is withdrawn from issue for consideration of a submission under 37 CFR 1.114 (request for continued examination). See 37 CFR 1.313(c)(2).

Petitioner is advised that the issue fee paid on June 18, 2007 in the above-identified application cannot be refunded. If, however, the above-identified application is again allowed, petitioner may request that it be applied towards the issue fee required by the new Notice of Allowance.[1]

Telephone inquiries should be directed to the undersigned at (571) 272-3218.

This matter is being referred to Technology Center AU 2837 for processing of the request for continued examination under 37 CFR 1.114 and for consideration of the Information Disclosure Statement.

Frances Hicks
Petitions Examiner
Office of Petitions

C:\Documents and Settings\fhicks\My Documents\470\july10\616202.wpd

---

[1] *The request to apply the issue fee to the new Notice may be satisfied by completing and returning the new Part B – Fee(s) Transmittal Form (along with any balance due at the time of submission). Petitioner is advised that the Issue Fee Transmittal Form **must** be completed and timely submitted to avoid abandonment.*

UNITED STATES PATENT AND TRADEMARK OFFICE

COMMISSIONER FOR PATENTS
UNITED STATES PATENT AND TRADEMARK OFFICE
P.O. BOX 1450
ALEXANDRIA, VA 22313-1450
www.uspto.gov

BINGHAM MCCUTCHEN LLP
THREE EMBARCADERO, SUITE 1800
SAN FRANCISCO, CA 94111-4067

COPY MAILED

JAN 2 9 2004

OFFICE OF PETITIONS

In re Application of	:	
Danenberg, et al.	:	
Application No. 10/616,203	:	DECISION GRANTING PETITION
Filed: July 8, 2003	:	
Attorney Docket No. **7000613003**	:	

This is a decision on the petition filed December 22, 2003, (certificate of mailing dated December 16, 2003) to accord the above-identified application a filing date of June 18, 2002.

On July 8, 2003, the application was deposited.

On October 16, 2003, the Office of Initial Patent Examination mailed a Notice stating that drawings were not present and that a filing date had not been accorded and the filing date would be the date of receipt of the drawings.

In response, the present petition alleges that the drawings were not "necessary for the understanding of the subject matter sought to be patented" within the meaning of 35 USC 113.

The Office has determined that drawings are not necessary to understand at least one claim within the meaning of the first sentence of 35 USC 113. It has been PTO practice to treat an application that contains at least one process or method claim as an application for which a drawing is not necessary for an understanding of the invention under 35 U.S.C. 113 (first sentence).[1] A review of the record reveals that claims 1 through 17 are method claims. Therefore, the present application is deemed to be an application that does not require a drawing for an understanding of the invention. Accordingly, the application, as filed, is entitled to a filing date.

In view of the above, the petition is **granted.**

Deposit account 50-2518 will be refunded the petition fee of $130.00.

The amendment, filed December 22, 2003, is noted and made of record.

The application is being returned to the Office of Initial Patent Examination for further processing with a filing date of July 8, 2003, using the application papers filed on July 8, 2003. Thereafter, the application will be forwarded to the appropriate technology center for further processing.

[1] MPEP 601.01(f).

Any inquiries related to this decision should be directed to the undersigned at (703)305-0010.

Kenya A. McLaughlin

Kenya A. McLaughlin
Petitions Attorney
Office of Petitions

UNITED STATES PATENT AND TRADEMARK OFFICE

COMMISSIONER FOR PATENTS
UNITED STATES PATENT AND TRADEMARK OFFICE
P.O. BOX 1450
ALEXANDRIA, VA 22313-1450
WWW.USPTO.GOV

Paper No. None

POSZ & BETHARDS, PLC
11250 ROGER BACON DRIVE
SUITE 10
RESTON VA 20190

COPY MAILED

JAN 06 2004

OFFICE OF PETITIONS

In re Application of	:	
Minekazu Sakai	:	
Application No. 10/616,205	:	DECISION ON PETITION
Filed: July 10, 2003	:	UNDER 37 C.F.R. §1.53(e)
Attorney Docket No. 01-446	:	
Title: CAPACITIVE DYNAMIC	:	
QUANTITY SENSOR	:	

This is a decision on the "petition requesting grant of filing date," filed October 23, 2003, which is properly treated as a petition under 37 C.F.R. §1.53(e), requesting the application, including Four sheets of drawings[1] be accorded a filing date of July 10, 2003 as part of the original disclosure.

The application was deposited on July 10, 2003. However, on October 7, 2003, the Office of Initial Patent Examination (OIPE) mailed a "Notice of Incomplete Nonprovisional Application - Filing Date Not Granted" (Notice), stating that the application appeared to have been deposited without drawings, and that a filing date would be accorded upon the filing of drawings.

In response, on October 23, 2003, applicants filed the present petition. The petition is further accompanied by the petition fee, a copy of four (4) sheets of drawing, and a copy of applicants' postcard receipt acknowledging receipt of "4 sheets of formal drawings" in the United States Patent and Trademark Office (Office) on July 10, 2003. Applicants request that the application, including four (4) sheets of drawings be accorded a filing date July 10, 2003.

---

1 Figures 1A through 4B (One A through Four B).

Upon review of the record, the above-mentioned drawing sheets have not been located among the application papers. However, the evidence is convincing that the application papers deposited on July 10, 2003 included four (4) sheets of drawings, and the drawing sheets containing Figures 1A through 4B (One A through Four B) were subsequently misplaced in the Office.

Therefore, the application, including four (4) sheets of drawings, was complete on filing and entitled to a filing date of July 10, 2003, as part of the original disclosure.

Accordingly, the petition is **GRANTED**.

The notice mailed October 7, 2003, was sent in error. Therefore, no petition fee is necessary. The petition fee of $130 will be refunded to petitioner's Deposit Account.

The application file is being returned to the Office of Initial Patent Examination for further processing with a filing date of July 10, 2003, using the original application papers filed on that date, as well four (4) sheets of drawings, submitted with the instant petition.

Any inquiries related to this decision should be directed to Attorney Paul Shanoski at (703) 305-0011.

C. T. Donnell for

Jay Lucas
Interim Supervisory Petitions Examiner
Office of Petitions
United States Patent and Trademark Office

UNITED STATES PATENT AND TRADEMARK OFFICE

Commissioner for Patents
United States Patent and Trademark Office
P.O. Box 1450
Alexandria, VA 22313-1450
www.uspto.gov

TEXAS INSTRUMENTS INCORPORATED
P O BOX 655474, M/S 3999
DALLAS TX 75265

COPY MAILED

FEB 0 1 2006

OFFICE OF PETITIONS

In re Application of
Ko et al.
Application No. 10/616,207
Filed: July 3, 2003
Attorney Docket No. TI-34822
Title of Invention: Retention Register For System-Transparent State Retention

DECISION ON PETITION

This is a decision on the petition under 37 CFR §1.137(b), filed September 1, 2005, to revive the above-identified application.

This above-identified application became abandoned for failure to timely file a proper reply within the meaning of 37 CFR 1.113 to the final Office Action of February 28, 2005. The final Office Action set a three (3) month shortened statutory period for reply. An amendment and a one month request for extension of time was filed on June 3, 2005. An advisory action was mailed June 14, 2005 indicating the amendment did not place the application in condition of allowance. Accordingly, this application became abandoned on June 29, 2005. This decision precedes the mailing of a Notice of Abandonment.

The requirements for the filing of a grantable petition under 37 CFR §1.137(b) have been met. This Petition is hereby **Granted**.

This application is being forwarded to Technology Center 2800 for further processing.

Telephone inquiries concerning this matter should be directed to the undersigned at (571) 272-3215.

Charlema R. Grant
Petitions Attorney
Office of Petitions

UNITED STATES PATENT AND TRADEMARK OFFICE

COMMISSIONER FOR PATENTS
UNITED STATES PATENT AND TRADEMARK OFFICE
P.O. BOX 1450
ALEXANDRIA, VA 22313-1450
www.uspto.gov

AFFYMETRIX, INC
ATTN: CHIEF IP COUNSEL, LEGAL DEPT.
3420 CENTRAL EXPRESSWAY
SANTA CLARA, CA 95051

COPY MAILED

MAR 28 2007

OFFICE OF PETITIONS

In re Application of
March S. Chee, et al.
Application No. 10/616,228
Filed: July 8, 2003
Attorney Docket No. 1091.1C

ON PETITION

This is a decision in response to the petition, filed October 16, 2006, to revive the above-identified application under the provisions of 37 CFR 1.137(b).

There is no indication that the person signing the instant petition was ever given a power of attorney or authorization of agent to prosecute the above-identified application. However, in accordance with 37 CFR 1.34(a), the signature of Daniel Mao appearing on the petition shall constitute a representation to the United States Patent and Trademark Office that he is authorized to represent the particular party on whose behalf he acts. A courtesy copy of this decision is being mailed to petitioner. However, if Mr. Mao desires to receive future correspondence regarding this application, the appropriate power of attorney or authorization of agent must be submitted. All future correspondence regarding this application file will be directed solely to the address of record.

The above-identified application became abandoned for failure to reply in a timely manner to the non-final Office action mailed March 20, 2006. This decision precedes the mailing of a Notice of Abandonment. On October 16, 2006, the present petition was filed.

The petition satisfies the requirements of 37 CFR 1.137(b) in that petitioner has supplied (1) the reply in the form of an amendment; (2) the petition fee of $1,500; and (3) the required statement of unintentional delay[1].

Accordingly, the petition is **GRANTED**.

The application is being referred to Technology Center AU 1631 for consideration of the amendment filed October 16, 2006.

[1] 37 CFR 1.137(b)(3) requires a statement that the entire delay in filing the required reply from the due date for the reply until the filing of a grantable petition pursuant to 37 CFR 1.137(b) was unintentional. While the statement is not made by an attorney of record, such statement is being treated as having been made as the result of a reasonable inquiry into the facts and circumstances of such delay. See 37 CFR 10.18(b) and Changes to Patent Practice and Procedure; Final Rule Notice, 62 Fed. Reg. 53131, 53178 (October 10, 1997), 1203 Off. Gaz. Pat. Office 63, 103 (October 21, 1997). In the event that such an inquiry has not been made, petitioner must make such an inquiry. If such inquiry results in the discovery that it is not correct that the entire delay in filing the required reply from the due date for the reply until the filing of a grantable petition pursuant to 37 CFR 1.137(b) was unintentional, petitioner must notify the Office.

Telephone inquiries concerning this decision should be directed to the undersigned at (571) 272-3204. Inquiries relating to further prosecution should be directed to the Technology Center.

Sherry D. Brinkley
Petitions Examiner
Office of Petitions

cc: DANIEL MAO
TOWNSEND AND TOWNSEND AND CREW LLP/ 015114
TWO EMBARCADERO CENTER, 8TH FLOOR
SAN FRANCISCO, CA 94111-3834

PTO/SB/66 (03-09)
Approved for use through 03/31/2012. OMB 0651-0016
U.S. Patent and Trademark Office: U.S. DEPARTMENT OF COMMERCE
Under the Paperwork Reduction Act of 1995, no persons are required to respond to a collection of information unless it displays valid OMB control number.

PETITION TO ACCEPT UNINTENTIONALLY DELAYED PAYMENT OF MAINTENANCE FEE IN AN EXPIRED PATENT (37 CFR 1.378(c))

Patent Number	Issue Date (YYYY-MM-DD)	Application Number	Filing Date (YYYY-MM-DD)	Docket Number (if applicable)
6904195	2005-06-07	10616244	2003-07-08	4341P084

CAUTION: Maintenance fee (and surcharge, if any) payment must correctly identify: (1) the patent number and (2) the application number of the actual U.S. application leading to issuance of that patent to ensure the fee(s) is/are associated with the correct patent. 37 CFR 1.366(c) and (d).

SMALL ENTITY
☐ Patentee claims, or has previously claimed, small entity status. See 37 CFR 1.27.

LOSS OF ENTITLEMENT TO SMALL ENTITY STATUS
☐ Patentee is no longer entitled to small entity status. See 37 CFR 1.27(g)

NOT Small Entity			Small Entity		
	Fee	Code		Fee	Code
◉	3 ½ year	(1551)	○	3 ½ year	(2551)
○	7 ½ year	(1552)	○	7 ½ year	(2552)
○	11 ½ year	(1553)	○	11 ½ year	(2553)

SURCHARGE
The surcharge required by 37 CFR 1.20(i)(2) (Fee Code 1558) must be paid as a condition of accepting unintentionally delayed payment of the maintenance fee.

MAINTENANCE FEE (37 CFR 1.20(e)-(g))
The appropriate maintenance fee must be submitted with this petition.

STATEMENT
THE UNDERSIGNED CERTIFIES THAT THE DELAY IN PAYMENT OF THE MAINTENANCE FEE TO THIS PATENT WAS UNINTENTIONAL

PETITIONER(S) REQUEST THAT THE DELAYED PAYMENT OF THE MAINTENANCE FEE BE ACCEPTED AND THE PATENT REINSTATED

THIS PORTION MUST BE COMPLETED BY THE SIGNATORY OR SIGNATORIES

37 CFR 1.378(d) states: "Any petition under this section must be signed by an attorney or agent registered to practice before the Patent and Trademark Office, or by the patentee, the assignee, or other party in interest."

I certify, in accordance with 37 CFR 1.4(d)(4) that I am

◉ An attorney or agent registered to practice before the Patent and Trademark Office

○ A sole patentee

○ A joint patentee; I certify that I am authorized to sign this submission on behalf of all the other patentees.

○ A joint patentee; all of whom are signing this e-petition

○ The assignee of record of the entire interest

Patent Practitioner			
A signature of the applicant or representative is required in accordance with 37 CFR 1.33 and 10.18. Please see 37 CFR 1.4(d) for the form of the signature			
Signature	/Lester J. Vincent/	Date (YYYY-MM-DD)	2009-08-04
Name	Lester J. Vincent	Registration Number	31460

This collection of information is required by 37 CFR 1.378(c). The information is required to obtain or retain a benefit by the public which is to file (and by the USPTO to process) an application. Confidentiality is governed by 35 U.S.C. 122 and 37 CFR 1.11 and 1.14. This collection is estimated to take 1 hour to complete, including gathering, preparing, and submitting the completed application form to the USPTO. Time will vary depending upon the individual case. Any comments on the amount of time you require to complete this form and/ or suggestions for reducing this burden, should be sent to the Chief Information Officer, U.S. Patent and Trademark Office, U.S. Department of Commerce, P.O. Box 1450, Alexandria, VA 22313-1450. DO NOT SEND FEES OR COMPLETED FORMS TO THIS ADDRESS. **This form can only be used when in conjunction with EFS-Web. If this form is mailed to the USPTO, it may cause delays in reinstating the patent.**

Privacy Act Statement

The Privacy Act of 1974 (P.L. 93-579) requires that you be given certain information in connection with your submission of the attached form related to a patent application or patent. Accordingly, pursuant to the requirements of the Act, please be advised that: (1) the general authority for the collection of this information is 35 U.S.C. 2(b)(2); (2) furnishing of the information solicited is voluntary; and (3) the principal purpose for which the information is used by the U.S. Patent and Trademark Office is to process and/or examine your submission related to a patent application or patent. If you do not furnish the requested information, the U.S. Patent and Trademark Office may not be able to process and/or examine your submission, which may result in termination of proceedings or abandonment of the application or expiration of the patent.

The information provided by you in this form will be subject to the following routine uses:

1. The information on this form will be treated confidentially to the extent allowed under the Freedom of Information Act (5 U.S.C. 552) and the Privacy Act (5 U.S.C. 552a). Records from this system of records may be disclosed to the Department of Justice to determine whether the Freedom of Information Act requires disclosure of these records.

2. A record from this system of records may be disclosed, as a routine use, in the course of presenting evidence to a court, magistrate, or administrative tribunal, including disclosures to opposing counsel in the course of settlement negotiations.

3. A record in this system of records may be disclosed, as a routine use, to a Member of Congress submitting a request involving an individual, to whom the record pertains, when the individual has requested assistance from the Member with respect to the subject matter of the record.

4. A record in this system of records may be disclosed, as a routine use, to a contractor of the Agency having need for the information in order to perform a contract. Recipients of information shall be required to comply with the requirements of the Privacy Act of 1974, as amended, pursuant to 5 U.S.C. 552a(m).

5. A record related to an International Application filed under the Patent Cooperation Treaty in this system of records may be disclosed, as a routine use, to the International Bureau of the World Intellectual Property Organization, pursuant to the Patent Cooperation Treaty.

6. A record in this system of records may be disclosed, as a routine use, to another federal agency for purposes of National Security review (35 U.S.C. 181) and for review pursuant to the Atomic Energy Act (42 U.S.C. 218(c)).

7. A record from this system of records may be disclosed, as a routine use, to the Administrator, General Services, or his/her designee, during an inspection of records conducted by GSA as part of that agency's responsibility to recommend improvements in records management practices and programs, under authority of 44 U.S.C. 2904 and 2906. Such disclosure shall be made in accordance with the GSA regulations governing inspection of records for this purpose, and any other relevant (i.e., GSA or Commerce) directive. Such disclosure shall not be used to make determinations about individuals.

8. A record from this system of records may be disclosed, as a routine use, to the public after either publication of the application pursuant to 35 U.S.C. 122(b) or issuance of a patent pursuant to 35 U.S.C. 151. Further, a record may be disclosed, subject to the limitations of 37 CFR 1.14, as a routine use, to the public if the record was filed in an application which became abandoned or in which the proceedings were terminated and which application is referenced by either a published application, an application open to public inspections or an issued patent.

9. A record from this system of records may be disclosed, as a routine use, to a Federal, State, or local law enforcement agency, if the USPTO becomes aware of a violation or potential violation of law or regulation.

UNITED STATES PATENT AND TRADEMARK OFFICE

Commissioner for Patents
United States Patent and Trademark Office
P.O. Box 1450
Alexandria, VA 22313-1450
www.uspto.gov

In re Patent No. 6904195
Issue Date: June 7,2005
Application No. 10616244
Filed: July 8,2003
Attorney Docket No. 4341P084

:
:DECISION GRANTING PETITION
:UNDER 37 CFR 1.378(c)
:

This is a decision on the electronic petition, filed August 4,2009 ,under 37 CFR 1.378(c) to accept the unintentionally delayed payment of the 3.5 year maintenance fee for the above-identified patent.

The petition is **GRANTED**.

The maintenance fee is accepted, and the above-identified patent reinstated as of August 4,2009 . This decision also constitutes notice that the fee has been accepted. An electronic copy of the petition and this decision has been created as an entry in the Image File Wrapper. Nevertheless, petitioner should print and retain an independent copy.

Telephone inquiries related to this electronic decision should be directed to the Electronic Business Center at 1-866-217-9197.

UNITED STATES PATENT AND TRADEMARK OFFICE

Commissioner for Patents
United States Patent and Trademark Office
P.O. Box 1450
Alexandria, VA 22313-1450
www.uspto.gov

JOHN R. ROSS
TREX ENTERPRISES
10455 PACIFIC CENTER CT.
SAN DIEGO, CA 92121

COPY MAILED

OCT 06 2004

OFFICE OF PETITIONS

In re Application of :
Peter Martin :
Application No. 10/616,251 :
Filed: July 8, 2003 :
Attorney Docket No. 484 :

ON PETITION

This is a decision on the petition under 37 CFR 1.137(b), filed August 9, 2004, to revive the above-identified application.

The petition is **GRANTED**.

The above-identified application became abandoned for failure to reply in a timely manner to the Notice to File Missing Parts of Application (Notice) mailed October 9, 2003. The Notice set a period for reply of two (2) months from the mail date of the Notice. No extensions of time under the provisions of 37 CFR 1.136(a) were obtained. Accordingly, the above-identified application became abandoned on December 10, 2003.

Telephone inquiries concerning this decision should be directed to Irvin Dingle at (571) 272-3210.

The matter is being forwarded to the Initial Patent Examination Unit.

Irvin Dingle
Petitions Examiner
Office of Petitions
Office of the Deputy Commissioner
for Patent Examination Policy

UNITED STATES PATENT AND TRADEMARK OFFICE

Commissioner for Patents
United States Patent and Trademark Office
P.O. Box 1450
Alexandria, VA 22313-1450
www.uspto.gov

September 8, 2006

Patent No. : 7,009,195 B2
Ser. No. : 10/616,258
Inventor(s) : Junichi Nakano, et al.
Issued : March 7, 2006
Title : **PHOTOCONDUCTIVE SWITCH MODULE**
Docket No. : **16825**

Re: Request for Certificate of Correction

Consideration has been given your request for the issuance of a certificate of correction for the above-identified patent under the provisions of Rule(s) 1.322 and/or 1.323.

Assignees' names and addresses (assignment data) printed in a patent, are based *solely* on information supplied in the appropriate space for identifying the assignment data, i.e., item 3 of the Issue Fee Transmittal Form PTOL-85B. Granting of a request under 37 CFR 3.81(b) is required to correct applicant's error providing ***incorrect or erroneous*** assignment data, *before* issuance of a Certificate of Correction, under 37 CFR 1.323 *(see Manual of Patent Examining Procedures (M.P.E.P) Chp.1400, sect. 1481).* This procedure is required *at any time after the issue fee is paid*, including after issuance of the patent.

In view of the foregoing, your request, in this mater, is hereby denied.

A request to correct the Assignee under 37 CFR 3.81(b) should include:

A. **the processing fee set forth in 37 CFR 1.117(h) (currently $130);**
B. a statement that the failure to include the correct assignee name on the PTOL-85B was inadvertent; and
C. a copy of the Notice of Recordation of Assignment Document, reflecting the reel and frame number where the assignment(s) is recorded and/or reflecting proof of *the date* the assignment was submitted for recordation.

In the Request, Applicant(s) may request that the file be forwarded to Certificates of Correction Branch, for issuance of a Certificate of Correction, if the Request is granted.

Any request under 37 CFR 3.81(b) should be directed to the following address or facsimile number:

By mail: Mail Stop PETITIONS
Commissioner for Patents
Post Office Box 1450
Alexandria, VA 22313-1450

By hand: Customer Service Window
Mail Stop Petitions
Randolph Building
401 Dulany Street
Alexandria, VA 22314

By fax: (703) 872-9306
ATTN: Office of Petitions

If a fee (currently $100) was previously submitted for consideration of a Request for Certificate of Correction, under CFR 1.323, to correct assignment data, , no additional fee is required.

Antonio Johnson
For Cecelia Newman
Decisions & Certificates
of Correction Branch
(703) 308-9390 ext. 111 or (703) 308-8309

Thomas Spinelli
Scully Scott Murphy & Presser
400 Garden City Plaza – Suite 300
Garden City, NY 11530

UNITED STATES PATENT AND TRADEMARK OFFICE

Commissioner for Patents
United States Patent and Trademark Office
P.O. Box 1450
Alexandria, VA 22313-1450
www.uspto.gov

NOV - 8 2004

MAILED

NOV - 8 2004

OFFICE OF THE DIRECTOR
TC 3600

CRAIG W. RODDY
HALLIBURTON ENERGY SERVICES
P.O. Box 1431
Duncan, OK 73536-0440

In re application of Jiten Chatterji et al Application No. 10/616,270 Filed: July 09, 2003 For: FOAMED COMPOSITIONS AND METHODS OF USE IN SUBTERRANEAN ZONES	: : : :	**DECISION ON PETITION TO MAKE SPECIAL (APPLICANT'S AGE)**

This is a decision on the petition submitted on July 09, 2003, under 37 CFR 1.102 (c) to make the above-identified application special under the accelerated examination procedure set forth in MPEP 708.02, Section IV: Applicant's Age.

The petition is **GRANTED**.

An application may be accorded special status upon the filing of a petition providing evidence showing that the applicant is at least 65 years old. Such a showing may be provided by evidence such as a birth certificate or a statement from the applicant.

The evidence submitted with the petition is a declaration signed by Mr. Chatterji indicating that he is at least 65 years of age and a copy of

The examiner is directed (1) to make an interference search for possible interfering applications, (2) to promptly examine this application out of turn, and (3) if any interfering application is discovered, to examine such application simultaneously and state in the first official letter of such application that it is being taken out of turn because of a possible interference.

Petitioner is advised that this application will continue to be special, throughout its entire prosecution and pendency, including interference or appeal, if any, only if petitioner makes a prompt ***bona fide*** effort, in response to each Office action, to place the application in condition for allowance, even if it is necessary to conduct an interview with the examiner to accomplish this purpose.

SUMMARY: Petition to Make Special **Granted.**

Steven N. Meyers
Special Programs Examiner
Patent Technology Center 3600
(703) 308-3868

SNM/pav: 11/03/04

UNITED STATES PATENT AND TRADEMARK OFFICE

Commissioner for Patents
United States Patent and Trademark Office
P.O. Box 1450
Alexandria, VA 22313-1450
www.uspto.gov

CRAIG W. RODDY
HALLIBURTON ENERGY SERVICES
P.O. BOX 1431
DUNCAN, OK 73536-0440

COPY MAILED

JAN 25 2006

OFFICE OF PETITIONS

In re Application of	:	
Jiten Chatterji et al	:	
Application No. 10/616,270	:	ON PETITION
Filed: July 9, 2003	:	
Attorney Docket No. HES 2002-IP-008093U1P1	:	

This is a decision on the petition under 37 CFR 1.137(b), filed November 25, 2005, to revive the above-identified application.

The petition is **GRANTED**.

The above-identified application became abandoned for failure to reply in a timely manner to the Notice of Non-Compliant Amendment (37 CFR 1.121) (Notice) mailed January 18, 2005. The Notice set a period for reply of two (2) months from the mail date of the Notice. No extensions of time under the provisions of 37 CFR 1.136(a) were obtained. Accordingly, the above-identified application became abandoned on February 19, 2005.

The file does not indicate a change of address has been submitted, although the address given on the petition differs from the address of record. If appropriate, a change of address should be filed in accordance with MPEP 601.03. A courtesy copy of this decision is being mailed to the address given on the petition; however, the Office will mail all future correspondence solely to the address of record.

Telephone inquiries concerning this decision should be directed to Wan Laymon at (571) 272-3220.

This matter is being referred to Technology Center AU 3676.

Wan Laymon
Petitions Examiner
Office of Petitions

cc: CLIFFORD C. DOUGHERTY, III
10TH FLOOR, TWO LEADERSHIP SQUARE
211 N. ROBINSON
OKLAHOMA CITY, OK 73102

UNITED STATES PATENT AND TRADEMARK OFFICE

Commissioner for Patents
United States Patent and Trademark Office
P.O. Box 1450
Alexandria, VA 22313-1450
www.uspto.gov

RATNERPRESTIA
P O BOX 980
VALLEY FORGE PA 19482-0980

In re Application of:
Goicoechea, George et al
Serial No.: 10/616,274
Filed: Jul. 9, 2003
Docket: BSI-210US5
Title: BIFURCATED ENDOLUMINAL PROSTHESIS

DECISION ON PETITION

This is a decision on the petition received on May 10, 2007, seeking to suspend action on the above-identified application for a period of six months for the second time. This petition is being considered pursuant to 37 CFR § 1.103(a). The petitioner has authorized a charge of the requisite $200.00 petition fee to the Account No. 18-0350.

The petition is denied.

The record shows that:

1) On Aug. 23, 2006, the petitioner filed a petition requesting a six-month suspension of examination pending the outcome of the investigation of priority of competing claims between two entities, namely, Boston Scientific Scimed, Inc. and Guidant.
2) On Nov. 6, 2006, the examiner granted the petition for suspension of action for a period of six months to provide the applicant with additional time to investigate the priority of competing claims between two entities.
2) On May 10, 2007, the petitioner again filed a petition requesting a six-month suspension of examination pending the completion of the investigation of priority of competing claims between two entities.
4) In the petition, petitioner also states that Boston Scientific has not yet been able to complete its investigation of priority between the present application and the Marcade '542 patent. Therefore, the applicant now requests the PTO to suspend prosecution of this application for another six months to enable Boston Scientific to investigate priority between the present application and the Marcade '542 patent.

Applicant's second request for suspension filed May 10, 2007 fails to set forth good and sufficient reasons to further delay prosecution. The Office must balance the burden of timely examinations and needs of the public to know which claims it faces with the needs of applicants in pursuing claims which reflect the scope to which they are entitled. Applicant has failed to outline where he presently stands in the process of gathering evidence in determining the priority claims between two entities, and also fails to establish why, in particular, another six months will advance his investigation. Accordingly, applicant has failed to establish good and sufficient reasons to continue delay of prosecution. The application is removed from suspended status and being returned to the examiner for immediate consideration of the remarks filed Aug. 23, 2006 and issuance of an Office action. Moreover, in light of the fact that more than ten months have passed from the date of the filing the current petition and no action was taken on this application, which is also more than the time period what the petitioner had requested, this petition must be denied.

Petitioner is entitled to file a request for reconsideration, and any such request must be filed within two months of the date of this decision. See 37 CFR § 1.181 (f). The request for reconsideration should be directed to the Office of the Deputy Commissioner for Patent Examination Policy at Mail Stop Petition, Commissioner for Patents, P.O. Box 1450, Alexandria, Virginia 22313-1450. See MPEP 1002.02.

PETITION DENIED.

Any inquiry regarding this decision should be directed to Henry C. Yuen, Special Programs Examiner at (571)-272-4856.

PETITION DENIED

Karen M. Young

Karen M. Young, Director
Technology Center 3700

UNITED STATES PATENT AND TRADEMARK OFFICE

Commissioner for Patents
United States Patent and Trademark Office
P.O. Box 1450
Alexandria, VA 22313-1450
www.uspto.gov

SQUIRE, SANDERS & DEMPSEY L.L.P.
8000 TOWERS CRESCENT, 14TH FLOOR
TYSONS CORNER VA 22182-2700

COPY MAILED

APR 0 1 2008

OFFICE OF PETITIONS

In re Application of :
YOKOYAMA, Taro :
Application No. 10/616,288 : DECISION GRANTING PETITION
Filed: July 10, 2003 : UNDER 37 CFR 1.313(c)(2)
Attorney Docket No. **59494.00004** :

This is a decision on the petition under 37 CFR 1.313(c)(2), filed March 31, 2008, to withdraw the above-identified application from issue after payment of the issue fee.

The petition is **GRANTED.**

The above-identified application is withdrawn from issue for consideration of a submission under 37 CFR 1.114 (request for continued examination). *See* 37 CFR 1.313(c)(2).

Petitioner is advised that the issue fee paid on January 30, 2008 cannot be refunded. If, however, this application is again allowed, petitioner may request that it be applied towards the issue fee required by the new Notice of Allowance.[1]

Telephone inquiries should be directed to the undersigned at (571) 272-7253.

This application is being referred to Technology Center AU 2624 for processing of the request for continued examination under 37 CFR 1.114 and for consideration of the concurrently filed information disclosure statement.

Monica A. Graves
Petitions Examiner
Office of Petitions

---

[1] *The request to apply the issue fee to the new Notice may be satisfied by completing and returning the new Part B – Fee(s) Transmittal Form (along with any balance due at the time of submission). Petitioner is advised that the Issue Fee Transmittal Form* ***must*** *be completed and timely submitted to avoid abandonment of the application.*

RAM Fee History Query

Revenue Accounting and Management

Name/Number: 10616288

Total Records Found: 10

Start Date: Any Date

End Date: Any Date

Accounting Date	Sequence Num.	Fee Type	Fee Code	Fee Amount	Mailroom Date	Payment Method
03/31/2008	00000063	1	1801	$810.00	03/28/2008	CK
03/31/2008	00000064	1	1464	$130.00	03/28/2008	CK
01/31/2008	00000010	1	1501	$1,440.00	01/30/2008	CK
01/31/2008	00000011	1	1504	$300.00	01/30/2008	CK
01/31/2008	00000012	1	8001	$30.00	01/30/2008	CK
01/07/2008	00000228	1	1806	$180.00	01/04/2008	CK
09/26/2007	00000006	1	1201	$800.00	09/25/2007	CK
12/12/2003	00000111	1	1001	$770.00	12/11/2003	CK
12/12/2003	00000112	1	1051	$130.00	12/11/2003	CK
12/12/2003	00000113	1	8021	$40.00	12/11/2003	CK

UNITED STATES PATENT AND TRADEMARK OFFICE

Commissioner for Patents
United States Patent and Trademark Office
P.O. Box 1450
Alexandria, VA 22313-1450
www.uspto.gov

MOLECULAR IMPRINTS
PO BOX 81536
AUSTIN TX 78708-1536

COPY MAILED
JUN 16 2006
OFFICE OF PETITIONS

In re Application of :
Byung Jin Choi et al :
Application No. 10/616,294 : ON PETITION
Filed: July 9, 2003 :
Attorney Docket No. P92/MII-44-26 :

This is a decision on the petition, filed June 9, 2006, under 37 CFR 1.313(c)(2) to withdraw the above-identified application from issue after payment of the issue fee.

The petition is **GRANTED**.

The above-identified application is withdrawn from issue for consideration of a submission under 37 CFR 1.114 (request for continued examination). See 37 CFR 1.313(c)(2).

Petitioner is advised that the issue fee paid on May 11, 2006, in the above-identified application cannot be refunded. If, however, the above-identified application is again allowed, petitioner may request that it be applied towards the issue fee required by the new Notice of Allowance.[1]

Telephone inquiries should be directed to the undersigned at (571) 272-3208.

The examiner of Technology Center AU 1722 will consider the request for continued examination under 37 CFR 1.114.

Karen Creasy

Karen Creasy
Petitions Examiner
Office of Petitions

---

[1] The request to apply the issue fee to the new Notice may be satisfied by completing and returning the new Issue Fee Transmittal Form PTOL-85(b), which includes the following language thereon: "Commissioner for Patents is requested to apply the Issue Fee and Publication Fee (if any) or re-apply any previously paid issue fee to the application identified above." Petitioner is advised that, whether a fee is indicated as being due or not, the Issue Fee Transmittal Form **must** be completed and timely submitted to avoid abandonment. Note the language in bold text on the first page of the Notice of Allowance and Fee(s) Due (PTOL-85).

UNITED STATES PATENT AND TRADEMARK OFFICE

COMMISSIONER FOR PATENTS
UNITED STATES PATENT AND TRADEMARK OFFICE
P.O. BOX 1450
ALEXANDRIA, VA 22313-1450
www.uspto.gov

Paper No. _____

Date : June 16, 2006

TO : Director, Office of Patent Publication

FROM : Office of the Deputy Commissioner
for Patent Examination Policy

SUBJECT : Withdrawal from Issue of

Applicant(s) :Byung Jin Choi et al
Application No. :10/616,294
Filed :July 9, 2003

The above-identified application has been assigned Patent No. 7,070,407 and an issue date of July 4, 2006.

It is hereby directed that this application be withdrawn from issue at the request of the applicant.

Do not refund the issue fee.

The following erratum should be published in the Official Gazette if the above-identified application is published in the OG of July 4, 2006:

"All reference to Patent No. 7,070,407 to Byung Jin Choi et al of Texas for SYSTEMS FOR MAGNIFICATION AND DISTORTION CORRECTION FOR IMPRINT LIGHOGRAPHY PROCESSES appearing in the Official Gazette of July 4, 2006 should be deleted since no patent was granted."

Karen Creasy

Karen Creasy
Petitions Examiner
Office of Petitions
Office of the Deputy Commissioner
for Patent Examination Policy

cc: Paul Harrison, MDW-4B03,(FAX-273-5468)
Deneise Boyd, MDE-3D39 (FAX-273-5124)
Mary Louise McAskill, ST-8C15 (FAX 305-4372)
Niomi Farmer, ST-8C14 (FAX-305-4372)
Mary E. Johnson (Cookie), MDE-7C71 (FAX 273-0038
Duane Davis P/OPC MDE-7D89

UNITED STATES PATENT AND TRADEMARK OFFICE

Commissioner for Patents
United States Patent and Trademark Office
P.O. Box 1450
Alexandria, VA 22313-1450
www.uspto.gov

COPY MAILED
JUL 27 2006
OFFICE OF PETITIONS

ADE & COMPANY INC.
P.O. BOX 28006 1795 HENDERSON HIGHWAY
WINNIPEG MB R2G1P-0 CA CANADA

In re Application of
David Brault et al. :
Application No. 10/616,297 : ON PETITION
Filed: July 10, 2003 :
Attorney Docket No. 84215-302 ADB :

This is a decision on the petition under 37 CFR 1.137(b),[1] filed March 13, 2006, to revive the above identified application.

The petition is **GRANTED**.

This application became abandoned for failure to timely reply to the Final Office Action mailed July 19, 2005. A shortened statutory period of three months was set for replying to the Final Office Action. No extensions of time having been filed, the application became abandoned October 20, 2005. Accordingly, the Notice of Abandonment was mailed February 23, 2006.

In response to the Final Office Action mailed July 19, 2005, petitioner has submitted a

---

[1]Effective December 1, 1997, the provisions of 37 CFR 1.137(b) now provide that where the delay in reply was unintentional, a petition may be filed to revive an abandoned application or a lapsed patent pursuant to 37 CFR 1.137(b). A grantable petition filed under the provisions of 37 CFR 1.137(b) must be accompanied by:

(1) the required reply, unless previously filed. In a nonprovisional application abandoned for failure to prosecute, the required reply may be met by the filing of a continuing application. In an application or patent, abandoned or lapsed for failure to pay the issue fee or any portion thereof, the required reply must be the payment of the issue fee or any outstanding balance thereof.

(2) the petition fee as set forth in 37 CFR 1.17(m);

(3) a statement that the entire delay in filing the required reply from the due date for the reply until the filing of a grantable petition pursuant to 37 CFR 1.137(b) was unintentional. The Commissioner may required additional information where there is a question whether the delay was unintentional; and

(4) any terminal disclaimer (and fee as set forth in 37 CFR 1.20(d)) required pursuant to 37 CFR 1.137(c)).

Request for Continued Examination (RCE) and an amendment as the submission required under 37 CFR 1.114.

This matter is being referred to Technology Center 3643 for processing of the RCE and submission.

Telephone inquiries related to this decision should be directed to the undersigned Petitions Attorney at (571) 272-3212.

Patricia Faison-Ball

Patricia Faison-Ball
Senior Petitions Attorney
Office of Petitions

UNITED STATES PATENT AND TRADEMARK OFFICE

Commissioner for Patents
United States Patent and Trademark Office
P.O. Box 1450
Alexandria, VA 22313-1450
www.uspto.go

Paper No.

MILLEN, WHITE, ZELANO & BRANIGAN, P.C.
2200 CLARENDON BLVD.
SUITE 1400
ARLINGTON, VA 22201

COPY MAILED

SEP 0 8 2004

OFFICE OF PETITIONS

In re Application of	:	
Ratan K. Chaudhury	:	
Application No. 10/616,299	:	
Filed: July 10, 2003	:	ON PETITION
Attorney Docket No.	:	
EMI-48	:	

This is a decision on the Petition to Receive Filing Date, filed October 31, 2003, requesting the above-identified application be accorded a filing date of July 10, 2003.

The petition is **granted**.

The application was filed on July 10, 2003. On October 6, 2003, the Office of Initial Patent Examination mailed a Notice of Incomplete Provisional Application (hereinafter "Notice") stating, *inter alia*, that the application had not been accorded a filing date because the application had been deposited without drawings.

Applicant responds with the instant petition wherein Applicant avers that the drawings are not necessary for an understanding of the invention and that application contains method claims. Applicant also avers that the application incorporates by reference provisional application no. 60/395,612, the entire disclosure of which has been incorporated by reference.

A review of the file reveals that Petitioner is correct - the specification contains method claims. As stated in MPEP § 601.01(f), it is the practice of the PTO to treat an application that contains at least one method claim as an application for which a drawing is not necessary for an understanding of the invention under 35 U.S.C. § 113 (first sentence).

MPEP § 601.01(f) also states that:

> A nonprovisional application having at least one claim, or a provisional application having at least some disclosure, directed to the subject matter discussed above for which a drawing is usually not considered essential for a filing date, describing drawing figure(s) in the specification, but filed without drawings will be treated as an application filed without all of the drawing figures referred to in the specification as discussed in MPEP § 601.01(g), so long as the application contains something that can be construed as a written description.

This application contains method claims; therefore, the application should have been treated as an application filed without all of the drawing figures referred to in the specification as discussed in MPEP § 601.01(g).

In view of the above, the Notice mailed February 11, 2004, was mailed in error and is hereby withdrawn.

It is also noted that Applicant is correct that the application includes a proper incorporation by reference of provisional application no. 60/395,612. Incorporation by reference permits an applicant to amend the application to include any subject matter in such prior application(s) without the need for a petition, provided the application is entitled to a filing date notwithstanding the incorporation by reference.

This application is being forwarded to the Office of Initial Patent Examination, Customer Corrections, for further processing, with the filing date of July 10, 2003, and an indication that no drawings were required nor present on filing.

The petition fee has been refunded to deposit account 13-3402 as authorized in the instant petition.

Telephone inquiries concerning this matter should be directed to the undersigned at (703) 305-0014.

Derek L. Woods
Petitions Attorney
Office of Petitions

UNITED STATES PATENT AND TRADEMARK OFFICE

Commissioner for Patents
United States Patent and Trademark Office
P.O. Box 1450
Alexandria, VA 22313-1450
www.uspto.gov

CERMAK KENEALY & VAIDYA, LLP
515 EAST BRADDOCK RD SUITE B
ALEXANDRIA VA 22314

COPY MAILED

MAY 06 2008

OFFICE OF PETITIONS

ON PETITION

In re Application of
M. Mintu Bachann
Application No. 10/616,300
Filed: July 10, 2003
Attorney Docket No. LEX8003-0001

This is a decision on the petition to withdraw the holding of abandonment, filed October 26, 2007, and treated under 37 CFR 1.181.

The petition under 37 CFR 1.181 is **GRANTED**.

The application was held abandoned on July 6, 2007 for failure to file a timely response to the non-Final Office Action mailed April 5, 2007. A three (3) month period for reply was set. Accordingly, a Notice of Abandonment was mailed on October 17, 2007.

Petitioner asserts that a proper response in the form of an amendment with a three month extension of time was filed on October 5, 2007 via the Electronic Filing System (EFS Web). Submitted as proof is an Electronic Acknowledge Receipt and a copy of printout from the PAIR system showing that the response was filed on October 5, 2007.

A search of the application file and the USPTO records reveals that in fact, an amendment and three month extension of time were timely filed on October 5, 2007, and are of record.

Accordingly, the Notice of Abandonment mailed October 17, 2007 was mailed in error and is hereby withdrawn. No petition fee is due and none has been charged. The extension of time fee in the amount of $1050 was properly charged upon receipt.

This matter is being referred to Technology Center 3694 for treatment of the response filed October 5, 2007.

Telephone inquiries concerning this matter may be directed to the undersigned Petitions Attorney at (571) 272-3212.

Patricia Faison-Ball

Patricia Faison-Ball
Senior Petitions Attorney
Office of Petitions

UNITED STATES PATENT AND TRADEMARK OFFICE

Commissioner for Patents
United States Patent and Trademark Office
P.O. Box 1450
Alexandria, VA 22313-1450
www.uspto.gov

MCDERMOTT, WILL & EMERY
600 13TH STREET, N.W.
WASHINGTON DC 20005-3096

COPY MAILED

NOV 12 2004

OFFICE OF PETITIONS

In re Application of
Craig Hansen et al.
Application No. 10/616,303
Filed: December 8, 2003
Attorney Docket No. 43876-144

: DECISION DISMISSING
: PETITION

This is a decision on the petition, which is treated under 37 CFR 1.182, filed December 8, 2003, requesting that the above-identified application be accorded a filing date of July 10, 2003, with Figures 34D and 34E as described in the specification, as a part of the original disclosure.

On July 10, 2003, the application was filed. However, on October 7, 2003, the Office of Initial Patent Examination (OIPE) mailed a Notice to File Missing Parts indicating amongst other requirements, that the application had been accorded a filing date July 10, 2003 but that Figures 34D and 34E as described in the specification appeared to have been omitted from the application.

In response, the present petition was filed. Petitioners argue that a complete application was present on July 10, 2003, for filing date purposes. Petitioners point to their postcard receipt as evidence that 166 pages of drawings were among the application papers filed on July 10, 2003 and argue that one (1) sheet of drawings containing Figures 34D and 34E as described in the specification were included in that number. Petitioners request that the application be accorded a filing date of July 10, 2003, with Figures 34D and 34E as a part of the original disclosure.

The argument and evidence supplied with the petition have been carefully considered, but are not persuasive. The USPTO has a well-established and well-publicized practice of providing a receipt for papers filed in the USPTO to any applicant desiring a receipt. The practice requires that any paper for which a receipt is desired be filed in the USPTO with a self-addressed postcard identifying the paper. A postcard receipt which itemizes and properly identifies the papers which are being filed serves as prima facie evidence of receipt in the USPTO of all the items listed thereon on the date stamped thereon by the USPTO. See section 503, Manual of Patent Examining Procedure (MPEP 503). Unfortunately, petitioners' postcard receipt cannot serve as evidence that the drawing sheet containing Figures 34D and 34E were received in the USPTO. The postcard receipt is itemized by the number of sheets filed not by the Figures. A review of the file reveals that 166 pages of drawings were filed with the application. However,

the review does not show Figures 34D and 34E are included in the file and furthermore, the drawing sheets are not numbered and thus it would be impossible to make a determination that the one sheet containing Figures 34D and 34E were included with the application.

The petition is **DISMISSED**.

USPTO PALM records indicate the filing date has been changed to December 19, 2003 but the filing date should have been changed to December 8, 2003, the date the omitted drawings were supplied.[1] December 19, 2003 was the date the remaining missing requirements were filed as a supplemental response to the Notice and with a one month extension of time request.

The application is being returned to the Office of Initial Patent Examination for a correction of the filing date to December 8, 2003, the date Figures 34D and 34E were filed and using the application papers filed on that date and the application papers filed July 10, 2003.

Telephone inquiries concerning this matter may be directed to the undersigned Petitions Attorney at (571) 272-3212.

Patricia Faison-Ball

Patricia Faison-Ball
Senior Petitions Attorney
Office of Petitions

[1]The mailing of a "Notice of Omitted Items" permits the applicant to either: (1) promptly establish prior receipt in the PTO of the omitted item at issue (generally by way of a date-stamped postcard receipt (MPEP 503)), or (2) promptly submit the omitted item in a nonprovisional application and accept the date of such submission as the application filing date. An applicant asserting that the omitted item was in fact deposited in the PTO with the application papers must file a petition (and the appropriate petition fee) with evidence of such deposit. An applicant desiring to submit the omitted item in a nonprovisional application and accept the date of such submission as the application filing date must file any omitted item with an oath or declaration in compliance with 37 CFR 1.63 and 1.64 referring to such item and a petition under 37 CFR 1.182 (with the petition fee under 37 CFR 1.17(h)) requesting the later filing date within two months of the date of the "Notice of Omitted Items" (37 CFR 1.181(f)). The third option is in the absence of electing options 1) or 2) above, to constructively opt to accept the filing date which has been accorded with the papers filed upon application. With option 3), no petition under 37 CFR 1.182 is necessary for that purpose.

UNITED STATES PATENT AND TRADEMARK OFFICE

Commissioner for Patents
United States Patent and Trademark Office
P.O. Box 1450
Alexandria, VA 22313-1450
www.uspto.gov

MCDERMOTT, WILL & EMERY
600 13TH STREET, N.W.
WASHINGTON DC 20005-3096

COPY MAILED

NOV 30 2004

OFFICE OF PETITIONS

In re Application of
Craig Hansen et al.
Application No. 10/616,303
Filed: July 10, 2003
Attorney Docket No. 43876-144

ON PETITION

This is a decision on the renewed petition filed November 19, 2004 under 37 CFR 1.53, requesting that the above-identified application be accorded a filing date of July 10, 2003, with Figures 34D and 34E as described in the specification, as a part of the original disclosure.

On July 10, 2003, the application was filed. However, on October 7, 2003, the Office of Initial Patent Examination (OIPE) mailed a Notice to File Missing Parts indicating amongst other requirements, that the application had been accorded a filing date July 10, 2003 but that Figures 34D and 34E as described in the specification appeared to have been omitted from the application. In response, a petition was filed December 8, 2003 arguing that a complete application was present on July 10, 2003, for filing date purposes. In the December 2003 petition, petitioners pointed to their postcard receipt as evidence that 166 pages of drawings were among the application papers filed on July 10, 2003 and argued that one (1) sheet of drawings containing Figures 34D and 34E as described in the specification were included in that number. That petition was dismissed in a decision mailed November 12, 2004 because petitioners' postcard receipt was itemized by the number of sheets filed not by the Figures. A review of the file also revealed that the number of pages of drawings filed corresponded with the postcard receipt but the review did not show Figures 34D and 34E were included. Further, it was found that the drawing sheets were not numbered and thus it would be impossible to make a determination that the one sheet containing Figures 34D and 34E was included with the application.

With the renewed petition, petitioners cite 37 CFR 1.57 and claim that the omitted drawings were incorporated by reference to parent application 09/922,319 now U.S. Patent No. 6,725,356. 37 CFR 1.57 provides that a proper priority claim under 37 CFR 1.55 or 37 CFR 1.78 can also be considered an incorporation by reference of the prior filed application as to the inadvertently omitted portion of the specification or drawings.

Additionally, MPEP 201.06 (c) states that:

> For the incorporation by reference to be effective as a proper safeguard against the omission of a portion of a prior application, the incorporation by reference statement must be included in the specification-as-filed, or transmittal letter-as-filed, or in an amendment specifically referred to in an oath or declaration executing the application.

Obviously, in view of the incorporation by reference of the prior application, the drawings of Figures 34D-34E are not new matter if it was a part of the disclosure of the prior application. New drawings may be entered by the primary examiner without petition so long as the new drawings contain no new matter. See MPEP § 608.02(a).

The petition is **GRANTED**.

Based on petitioners' representation that the Application No. 09/922,319 now U.S. Patent No. 6,725,356 was incorporated by reference in the present application, it appears that the Figures 34D-34E were present in the Office on July 10, 2003, albeit in the file of another application, *i.e.,* Application No. 09/922,319.

Since the petition was required to accord the requested filing date, the petition fee of $130.00 will not be refunded.

The application is being returned to the Office of Initial Patent Examination for a correction of the filing date to July 10, 2003 and using the application papers filed on that date and the application papers filed November 19, 2004 with the instant petition. The application will then be examined and the primary examiner is expected to compare the application papers filed July 10, 2003 to the disclosure of prior application No. 09/922,319 in order to verify that the drawings were in fact, a part of the disclosure of the prior application.

Telephone inquiries concerning this matter may be directed to the undersigned Petitions Attorney at (571) 272-3212.

Patricia Faison-Ball

Patricia Faison-Ball
Senior Petitions Attorney
Office of Petitions

UNITED STATES PATENT AND TRADEMARK OFFICE

Commissioner for Patents
United States Patent and Trademark Office
P.O. Box 1450
Alexandria, VA 22313-1450
www.uspto.gov

MCDERMOTT, WILL & EMERY
600 13TH STREET, N.W.
WASHINGTON DC 20005-3096

COPY MAILED
MAY 15 2006
OFFICE OF PETITIONS

In re Application of	:	
Craig Hansen et al	:	
Application No. 10/616,303	:	ON PETITION
Filed: July 10, 2003	:	
Attorney Docket No. 43876-144	:	

This is a decision on the petition, filed May 11, 2006, under 37 CFR 1.313(c)(2) to withdraw the above-identified application from issue after payment of the issue fee.

The petition is **GRANTED.**

The above-identified application is withdrawn from issue for consideration of a submission under 37 CFR 1.114 (request for continued examination). See 37 CFR 1.313(c)(2).

Petitioner is advised that the issue fee paid on January 4, 2006, in the above-identified application cannot be refunded. If, however, the above-identified application is again allowed, petitioner may request that it be applied towards the issue fee required by the new Notice of Allowance.[1]

Telephone inquiries should be directed to the undersigned at (571) 272-3208.

The examiner of Technology Center AU 2671 will consider the request for continued examination under 37 CFR 1.114.

Karen Creasy
Petitions Examiner
Office of Petitions

---

[1] The request to apply the issue fee to the new Notice may be satisfied by completing and returning the new Issue Fee Transmittal Form PTOL-85(b), which includes the following language thereon: "Commissioner for Patents is requested to apply the Issue Fee and Publication Fee (if any) or re-apply any previously paid issue fee to the application identified above." Petitioner is advised that, whether a fee is indicated as being due or not, the Issue Fee Transmittal Form **must** be completed and timely submitted to avoid abandonment. Note the language in bold text on the first page of the Notice of Allowance and Fee(s) Due (PTOL-85).

UNITED STATES PATENT AND TRADEMARK OFFICE

Commissioner for Patents
United States Patent and Trademark Office
P.O. Box 1450
Alexandria, VA 22313-1450
www.uspto.gov

Alan A. Csontos
Michelin North America, Inc.
Intellectual Property Department
P.O. Box 2026
Greenville, SC 29602

COPY MAILED

JAN 2 5 2006

OFFICE OF PETITIONS

In re Application of

Richard Abinal

Application No. 10/616,315

Filed: July 9, 2003

Attorney Docket No. P10-1302 US

DECISION ON PETITION

This is a decision on the petition to withdraw the holding of abandonment under 37 CFR 1.181(a), filed on November 18, 2005.

The petition is **granted**.

This application was held abandoned on February 24, 2005, after no reply was received to the final Office action mailed November 23, 2004. The notice set forth a shortened statutory period for reply of three months from its mailing date. A Notice of Abandonment was mailed on October 5, 2005. The instant petition was filed on November 18, 2005. Petitioner maintains that the notice of November 23, 2004, was never received and provides a copy of the relevant docket records as proof of the same.

Section 711.03(c)(II) of the *Manual of Patent Examining Procedure* ("MPEP") provides that in order to establish non-receipt of an Office action so as prove that the imposition of a holding of abandonment is improper, petitioner must: 1) provide a statement to the Office indicating that the Office action was not received by petitioner; 2) include in the statement an attestation to the fact that a review of the file jacket and docket records maintained by petitioner indicates that the Office action was not received; and 3) provide a copy of the docket record where the non-received Office communication would have been entered had it been received and docketed.

Petitioner has met the burden of proof as established by Section 711.03(c)(II) of the MPEP. The holding of abandonment is, therefore, withdrawn.

The application file is being forwarded to Technology Center 3700, GAU 3723 for further processing.

Questions concerning this decision should be directed to the undersigned at (571) 272-3222.

Kenya A. McLaughlin
Petitions Attorney
Office of Petitions

SPE RESPONSE FOR CERTIFICATE OF CORRECTION

Paper No.: _____

DATE : 09/10/07

TO SPE OF : ART UNIT

SUBJECT : Request for Certificate of Correction for Appl. No.: **10/616318** Patent No.: **6892043**

Please respond to this request for a certificate of correction within 7 days.

Please review the requested changes/corrections as shown in the **COCIN** document(s) in the IFW application image. No new matter should be introduced, nor should the scope or meaning of the claims be changed.

Please complete the response (see below) and forward the completed response to scanning using document code **COCX**.

Angela Green
Certificates of Correction Branch
703.308.9380 ext. 123

Thank You For Your Assistance

The request for issuing the above-identified correction(s) is hereby:
Note your decision on the appropriate box.

- ☒ **Approved** — All changes apply.
- ☐ **Approved in Part** — Specify below which changes **do not** apply.
- ☐ **Denied** — State the reasons for denial below.

Comments: _____

2852

SPE **Art Unit**

SPE RESPONSE FOR CERTIFICATE OF CORRECTION

Paper No.: _____

DATE : 09/10/07

TO SPE OF : ART UNIT

SUBJECT : Request for Certificate of Correction for Appl. No.: **10/616318** Patent No.: **6892043**

Please respond to this request for a certificate of correction within 7 days.

Please review the requested changes/corrections as shown in the **COCIN** document(s) in the IFW application image. No new matter should be introduced, nor should the scope or meaning of the claims be changed.

Please complete the response (see below) and forward the completed response to scanning using document code **COCX**.

Angela Green
Certificates of Correction Branch
703.308.9380 ext. 123

Thank You For Your Assistance

The request for issuing the above-identified correction(s) is hereby:
Note your decision on the appropriate box.

- [x] **Approved** — All changes apply.
- [ ] **Approved in Part** — Specify below which changes **do not** apply.
- [ ] **Denied** — State the reasons for denial below.

Comments: _____

SPE

2852
Art Unit

3737

UNITED STATES PATENT AND TRADEMARK OFFICE

COMMISSIONER FOR PATENTS
UNITED STATES PATENT AND TRADEMARK OFFICE
P.O. BOX 1450
ALEXANDRIA, VA 22313-1450
www.uspto.gov

MCANDREWS HELD & MALLOY, LTD
500 WEST MADISON STREET
SUITE 3400
CHICAGO IL 60661

COPY MAILED

FEB 0 5 2004

OFFICE OF PETITIONS

In re Application of
Zhang, Lawrence, Lima, Miller & Hall
Application No.: 10/616,319
Filed: July 9, 2003
Attorney Docket No.: 133860-2
(MHM 14882US02)
For: ULTRASOUND BREAST SCREENING DEVICE

DECISION REFUSING STATUS UNDER 37 CFR 1.47(a)

This is a decision on the petition under 37 CFR 1.47(a), filed November 17, 2003.

The petition is **DISMISSED**.

Any request for reconsideration of this decision must be submitted within TWO (2) MONTHS from the mail date of this decision. Extensions of time under 37 CFR 1.136(a) are permitted. Any response should be entitled "Request for Reconsideration of Petition Under 37 CFR 1.47(a)" and must include an oath or declaration executed by the inventors. **Failure to respond will result in abandonment of the application.**

The above-identified application was filed on July 9, 2003 without an executed oath or declaration. Accordingly, on October 6, 2003, a "Notice to File Missing Parts of Nonprovisional Application" was mailed, requiring an executed oath or declaration and a surcharge for its late filing.

In response, on November 17, 2003 a declaration executed by 3 of 5 joint inventors, the surcharge, the petition fee, and the instant petition were filed. A declaration of facts of Attorney Joseph M. Butscher, accompanied the petition. Attorney Butscher explains that non-signing joint inventors Lawrence and Lima were each Express Mailed a copy of the entire application and a declaration, but each did not respond to the request that he sign the declaration for the patent application within a reasonable specified period of time.

A grantable petition under 37 CFR 1.47(a) requires

(1) a petition including proof of the pertinent facts establishing that the joint inventor(s) refuses to join, or cannot be found or reached after diligent effort,
(2) a proper oath or Declaration executed by the available joint inventor(s),
(3) the fee of $130 as specified in 37 CFR § 1.17(h), and
(4) the last known address of the omitted inventor(s).

This petition lacks item (2) above.

As to item (2), an oath or declaration for the patent application in compliance with 37 CFR 1.63 and 1.64 still has not been presented. There are three problems with the declaration.

1. The declaration contains an noninitialed, nondated alteration to Inventor Zhang's citizenship. 37 CFR 1.52(c) states that "[a]ny interlineation, erasure, cancellation or other alteration of the application papers filed should be made on or before the signing of the accompanying oath or declaration pursuant to 1.63...." This includes the oath or declaration. The Office will not consider whether noninitialed and or nondated alterations were made before or after signing of the oath or declaration but will require a new oath or declaration. See MPEP 605.04(a).

2. The format of the declaration is not acceptable. The first page of the Declaration does not list all joint inventors and the Declaration does not include page numbers -- i.e. 1 of 2; 2 of 2. As such, there could be ambiguity with respect to how many inventors there are. The Declaration should set forth all of the joint inventors on the same page to ensure that each named inventor is aware of the other named inventors of the subject matter. See 37 CFR 1.63.

3. Because petitioners know their application number, it should be referenced on the first page of the declaration after the application's filing date.

An oath or declaration in compliance with 37 CFR 1.63 and 1.64 signed by the Rule 1.47 applicants on behalf of Messrs. Lawrence and Lima is REQUIRED. See MPEP 409.03(a).

Further correspondence with respect to this matter should be addressed as follows:

By mail: Mail Stop PETITION
Commissioner for Patents
Post Office Box 1450
Alexandria, VA 22313-1450
ATTN: E. Shirene Willis

By hand: Crystal Plaza 1 Lobby
2011 South Clark Place
Room 1B03
Arlington, VA 22202
ATTN: E. Shirene Willis

By FAX: (703) 872-9306
ATTN: Office of Petitions -- E. Shirene Willis

Telephone inquiries should be directed to the undersigned at (703) 308-6712.

E. Shirene Willis

E. Shirene Willis
Senior Petitions Attorney
Office of Petitions
Office of the Deputy Commissioner
for Patent Examination Policy

UNITED STATES PATENT AND TRADEMARK OFFICE

Commissioner for Patents
United States Patent and Trademark Office
P.O. Box 1450
Alexandria, VA 22313-1450
www.uspto.gov

MCANDREWS HELD & MALLOY, LTD
500 WEST MADISON STREET
SUITE 3400
CHICAGO IL 60661

COPY MAILED

MAR 0 5 2007

OFFICE OF PETITIONS

In re Application of
Zhang, Lawrence, Lima, Miller & Hall
Application No.: 10/616,319
Filed: July 9, 2003
Attorney Docket No.: 133860-2
(MHM 14882US02)
For: ULTRASOUND BREAST SCREENING DEVICE

DECISION ACCORDING STATUS UNDER 37 CFR 1.47(a)

This is a decision on the reconsideration petition under 37 CFR 1.47(a), filed March 8, 2004 (certificate of mailing date March 4, 2004).The Office apologizes for the delay in addressing the present reconsideration petition, which was only recently forwarded to the Office of Petitions.

The petition is **GRANTED**.

Petitioners have shown that non-signing inventors Lawrence and Lima have constructively refused to join in the filing of the above-identified application after having been presented with the application papers. Specifically, the statement of facts of Attorney Joseph M. Butscher establishes that the inventors were mailed the application and a declaration, but each failed to respond to the request that he sign the declaration. Petitioners have submitted a declaration in compliance with 37 CFR 1.63 and 1.64.

This application and papers have been reviewed and found in compliance with 37 CFR 1.47(a). This application is hereby accorded Rule 1.47(a) status.

As provided in Rule 1.47(c), this Office will forward notice of this application's filing to the non-signing inventors at the addresses given in the petition. Notice of the filing of this application will also be published in the Official Gazette.

After this decision is mailed, the above-identified application will be returned to Technology Center A.U. 3737 for examination in due course.

Telephone inquiries should be directed to the undersigned at (571) 272-3230.

Shirene Willis Brantley

Shirene Willis Brantley
Senior Petitions Attorney
Office of Petitions

UNITED STATES PATENT AND TRADEMARK OFFICE

Commissioner for Patents
United States Patent and Trademark Office
P.O. Box 1450
Alexandria, VA 22313-1450
www.uspto.gov

GILBERT M. LIMA
227 PRAIRIE DOG LANE
FREMONT, CA 94539

COPY MAILED

MAR 0 5 2007

OFFICE OF PETITIONS

In re Application of
Zhang, Lawrence, Lima, Miller & Hall
Application No.: 10/616,319
Filed: July 9, 2003
Attorney Docket No.: 133860-2
(MHM 14882US02)
For: ULTRASOUND BREAST SCREENING DEVICE

LETTER

Dear Mr. Lima:

You are named as a joint inventor in the above identified United States patent application, filed under the provisions of 35 U.S.C. 116 (United States Code), and 37 CFR 1.47(a), Rules of Practice in Patent Cases. Should a patent be granted on the application you will be designated therein as a joint inventor.

As a named inventor you are entitled to inspect any paper in the file wrapper of the application, order copies of all or any part thereof (at a prepaid cost per 37 CFR 1.19) or make your position of record in the application. Alternatively, you may arrange to do any of the preceding through a registered patent attorney or agent presenting written authorization from you. If you care to join the application, counsel of record (see below) would presumably assist you. Joining in the application would entail the filing of an appropriate oath or declaration by you pursuant to 37 CFR 1.63.

Requests for information regarding your application should be directed to the File Information Unit at (703)308-2733. Information regarding how to pay for and order a copy of the application, or a specific paper in the application, should be directed to Certification Division at (703)308-9726 or 1(800)972-6382 (outside the Washington D.C. area).

Telephone inquiries regarding this communication should be directed to the undersigned at (571) 272-3230.

Shirene Willis Brantley
Senior Petitions Attorney
Office of Petitions

ATTORNEY OF RECORD: MCANDREWS HELD & MALLOY, LTD
500 WEST MADISON STREET
SUITE 3400
CHICAGO IL 60661

UNITED STATES PATENT AND TRADEMARK OFFICE

Commissioner for Patents
United States Patent and Trademark Office
P.O. Box 1450
Alexandria, VA 22313-1450
www.uspto.gov

ROBERT F. LAWRENCE
65 GLEN HAVEN RIDGE
SOQUEL, CA 95073

COPY MAILED

MAR 0 5 2007

OFFICE OF PETITIONS

In re Application of
Zhang, Lawrence, Lima, Miller & Hall
Application No.: 10/616,319
Filed: July 9, 2003
Attorney Docket No.: 133860-2
(MHM 14882US02)
For: ULTRASOUND BREAST SCREENING DEVICE

LETTER

Dear Mr. Lawrence:

You are named as a joint inventor in the above identified United States patent application, filed under the provisions of 35 U.S.C. 116 (United States Code), and 37 CFR 1.47(a), Rules of Practice in Patent Cases. Should a patent be granted on the application you will be designated therein as a joint inventor.

As a named inventor you are entitled to inspect any paper in the file wrapper of the application, order copies of all or any part thereof (at a prepaid cost per 37 CFR 1.19) or make your position of record in the application. Alternatively, you may arrange to do any of the preceding through a registered patent attorney or agent presenting written authorization from you. If you care to join the application, counsel of record (see below) would presumably assist you. Joining in the application would entail the filing of an appropriate oath or declaration by you pursuant to 37 CFR 1.63.

Requests for information regarding your application should be directed to the File Information Unit at (703)308-2733. Information regarding how to pay for and order a copy of the application, or a specific paper in the application, should be directed to Certification Division at (703)308-9726 or 1(800)972-6382 (outside the Washington D.C. area).

Telephone inquiries regarding this communication should be directed to the undersigned at (571) 272-3230.

Shirene Willis Brantley

Shirene Willis Brantley
Senior Petitions Attorney
Office of Petitions

ATTORNEY OF RECORD: MCANDREWS HELD & MALLOY, LTD
500 WEST MADISON STREET
SUITE 3400
CHICAGO IL 60661

UNITED STATES PATENT AND TRADEMARK OFFICE

Commissioner for Patents
United States Patent and Trademark Office
Washington, D.C. 20231
www.uspto.gov
DIW 09-04

MORGAN, LEWIS & BOCKIUS, LLP.
2 PALO ALTO SQUARE
3000 EL CAMINO REAL
PALO ALTO CA 94306

COPY MAILED

SEP 13 2004

OFFICE OF PETITIONS

ON PETITION

In re Application of
Lucy G. Hosking et al.
Application No. 10/616,362
Filed: July 8, 2003
Attorney Docket No. 9775-0157-999

This is a decision on the petition under 37 CFR 1.182, filed July 27, 2004, to change the name of the first named inventor. This decison will also address the petition filed under 37 CFR 1.182 filed June 8, 2004.

The petition filed July 27, 2004 is **GRANTED**.
The petition filed June 8, 2004 is **DISMISSED**.

Pursuant to a court order dated January 6, 2004, changing the first named inventor's name, the name of the first inventor will be changed in USPTO records from "STEPHEN G. HOSKING" to -- **LUCY G. HOSKING** --.

The file is being forwarded to the Office of Initial Patent Examination, Customer Corrections to change Office records to reflect the change of the first inventor's name as noted above, and then to Technology Center 2633 for examination in due course.

It is understood that Workman Nydegger also handles IP work for the assignee FINISAR Corporation, but since Workman Nydegger is not the attorneys of record, the petition filed by them on June 8, 2004 will not be addressed. It is incumbent upon the attorneys of record or the assignee to insure that petitions and other official communications with the USPTO filed are by those authorized to do so and that dual correspondences will not be permitted.

Telephone inquiries concerning this matter should be directed to the undersigned Petitions Attorney at (703) 305-4497.

Patricia Faison-Ball

Patricia Faison-Ball
Senior Petitions Attorney
Office of Petitions

cc:
WORKMAN NYDEGGER
1000 EAGLE GATE TOWER
60 EAST SOUTH TEMPLE
SALT LAKE CITY, UT 84111

UNITED STATES PATENT AND TRADEMARK OFFICE

Commissioner for Patents
United States Patent and Trademark Office
P.O. Box 1450
Alexandria, VA 22313-1450
www.uspto.gov

QUALCOMM INCORPORATED
5775 MOREHOUSE DR.
SAN DIEGO, CA 92121

COPY MAILED
AUG 22 2008

In re Application of	:	
Uppinder S. Babbar, et. al.	:	
Application No. 10/616,388	:	DECISION ON PETITION
Filed: July 9, 2003	:	
Attorney Docket No. 020703	:	

This is a decision on the petition under the unintentional provisions of 37 CFR 1.137(b), filed July 15, 2008, to revive the above-identified application.

The petition is **GRANTED**.

This application became abandoned for failure to timely pay the issue and publication fees on or before July 9, 2008, as required by the Notice of Allowance and Fee(s) Due, mailed April 9, 2008. Accordingly, the date of abandonment of this application is July 10, 2008.

There is no indication that the person signing the petition was ever given a power of attorney or authorization of agent to prosecute the above-identified application. However, in accordance with 37CFR 1.34(a), the signature of Darren M. Simon appearing on the petition shall constitute a representation to the United States Patent and Trademark Office that he is authorized to represent the particular party in whose behalf he acts. If petitioner desires to receive future correspondence regarding this application, the appropriate power of attorney or authorization of agent must be submitted.

The petition satisfies the requirements of 37 CFR 1.137(b) in that petitioner has supplied (1) the reply in the form of payment of the issue fee of $1440 and the publication fee of $300, (2) the petition fee of $1540; and (3) a proper statement of unintentional delay.

Telephone inquiries concerning this decision should be directed to Denise Williams at (571) 272-8930.

This application is being referred to the Office of Data Management for processing into a patent.

Andrea Smith
Petitions Examiner
Office of Petitions

UNITED STATES PATENT AND TRADEMARK OFFICE

Commissioner for Patents
United States Patent and Trademark Office
P.O. Box 1450
Alexandria, VA 22313-1450
www.uspto.gov

TOWNSEND AND TOWNSEND AND CREW, LLP
TWO EMBARCADERO CENTER
EIGHTH FLOOR
SAN FRANCISCO CA 94111-3834

COPY MAILED

JAN 12 2007

OFFICE OF PETITIONS

ON PETITION

In re Application of :
Joe W. Gray et al. :
Application No. 10/616,403 :
Filed: July 8, 2003 :
Attorney Docket No.: **02037O-139300US** :

This decision is in response to the petition filed December 28, 2006, to withdraw the holding of abandonment for the above-identified application. The petition is being treated under 37 CFR 1.181.

The petition under 37 CFR 1.181 is **GRANTED**.

The application was held abandoned on July 5, 2006, for failure to timely submit a timely response to the Restriction Requirement mailed June 1, 2006, which set a thirty day period for reply. Accordingly, a Notice of Abandonment was mailed December 15, 2006.

Petitioner asserts that a response was filed and, in support, petitioner has submitted, *inter alia*, a copy of the response and a five month extension of time request, both of which bear a certificate of mail dated December 1, 2006, pursuant to 37 CFR 1.8.

A search of the application file and the USPTO records does not reveal that the response was filed but, the evidence submitted corroborates a timely response to the restriction requirement.

Accordingly, the Notice of Abandonment mailed December 15, 2006 was mailed in error and is hereby withdrawn. No petition fee is due and none has been charged.

This matter will be referred to Technology Center 1643 for appropriate action on the amendment filed December 1, 2006, a copy of which was submitted with the instant petition.

Telephone inquiries concerning this matter may be directed to the undersigned Petitions Attorney at (571) 272-3212.

Patricia Faison-Ball

Patricia Faison-Ball
Senior Petitions Attorney
Office of Petitions

UNITED STATES PATENT AND TRADEMARK OFFICE

Commissioner for Patents
United States Patent and Trademark Office
P.O. Box 1450
Alexandria, VA 22313-1450
www.uspto.gov

COPY MAILED

NOV 04 2005

OFFICE OF PETITIONS

LACKENBACH SIEGEL, LLP
LACKENBACH SIEGEL BUILDING
1 CHASE ROAD
SCARSDALE NY 10583

In re Application of
ARAUJO et al.
Application No. 10/616,431
Filed: July 9, 2003
Attorney Docket No. 9182

DECISION
ON PETITION

This is a decision on the petition under 37 CFR 1.137(b), filed July 1, 2005, to revive the above-identified application.

The petition is **GRANTED**.

The application became abandoned for failure to reply in a timely manner to the Election of Species Requirement mailed September 22, 2004 which set a shortened statutory period for reply of one (1) month or thirty (30) days (whichever is later). No extensions of time under the provisions of 37 CFR 1.136(a) were obtained. Accordingly, the application became abandoned on October 23, 2004.

The petition satisfies the conditions for revival pursuant to the provisions of 37 CFR 1.137 (b) in that (1) the reply in the form of the filing of a continuing application under 37 CFR 1.53(b); (2) the petition fee of $750; and (3) the required statement of unintentional delay have been received. Accordingly, the filing of the continuing application is accepted as having been unintentionally delayed.

It is not apparent whether the person signing the statement of unintentional delay was in a position to have firsthand or direct knowledge of the facts and circumstances of the delay at issue. Nevertheless, such statement is being treated as having been made as the result of a reasonable inquiry into the facts and circumstances of such delay. See 37 CFR 10.18(b) and Changes to Patent Practice and Procedure; Final Rule Notice, 62 Fed. Reg. 53131, 53178 (October 10, 1997), 1203 Off. Gaz. Pat. Office 63, 103 (October 21, 1997). In the event that such an inquiry has not been made, petitioner must make such an inquiry. If such inquiry results in the discovery that it is not correct that the entire delay in filing the required reply from the due date for the reply until the filing of a grantable petition pursuant to 37 CFR 1.137(b) was unintentional, petitioner must notify the Office.

There is no indication that the person signing the petition was ever given a power of attorney or authorization of agent to prosecute the application. If the person signing the petition desires to receive future correspondence regarding this application, the appropriate power of attorney or authorization of agent must be submitted. While a courtesy copy of this decision is being mailed to the person signing the petition, all future correspondence will be directed to the address currently of record until appropriate instructions are received.

The above-identified application is being construed as being revived solely for purposes of continuity and as a request to expressly abandon the application upon revival. As continuity has been established by this decision reviving the above-identified application, the above-identified application is again abandoned in favor of the continuation application U.S. Serial No. 11/174,399. Petitioner must notify the Office if this is **not** a correct interpretation.

Telephone inquiries concerning this decision should be directed to Denise Pothier at (571) 272-4787.

The application matter is being forwarded to Files Repository.

Frances Hicks
Petitions Examiner
Office of Petitions

cc: RALPH E. LOCHER
LERNER AND GREENBERG, P.A.
P.O. BOX 2480
HOLLYWOOD, FL 33022-2480

UNITED STATES PATENT AND TRADEMARK OFFICE

Commissioner for Patents
United States Patent and Trademark Office
P.O. Box 1450
Alexandria, VA 22313-1450
www.uspto.gov

ROYAL W. CRAIG
SUITE 153
10 NORTH CALVERT STREET
BALTIMORE MD 21202

COPY MAILED

MAR 27 2006

OFFICE OF PETITIONS

In re Application of	:
Korber, Stengel, Babcock	:
Application No. 10/616,461	: LETTER AND NOTICE OF
Filed: July 9, 2003	: NON ENTRY OF THIRD PARTY
PG Pub: US20040123782A1 7/2/2004	: PAPERS

This application is before this office due to several documents filed by a third party on February 17, 2006, including (1) a "petition" styled as being filed under 37 CFR 1.1.138(b) to expressly abandon this application which as the issue fee was paid should have been 37 CFR 1.313(c)(3), signed by agent Mary B. Trung Reg. No. 50,007 who is not of record;(2)a purported revocation of the current power of attorney and change of correspondence address by the alleged sole inventor, Stengel, and a purported appointment by Stengel of Trung; and (5) various exhibits that are contended to show that the action taken by Trung on behalf of the alleged sole inventor was proper.

Since this application was the subject of a pre grant publication (PG Pub) prior to the filing of the above-noted documents, the provisions of the statute (35 U.S.C. § 122(c)) the applicable rules (*e.g.*, 37 CFR §§ 1.99, 1.291, and 1.292) and procedures(e.g., MPEP §§ 1134.01, 1901.06) now place stringent limitations on the treatment, or even on the retention *vel non* in this file, of any third party submissions that protest, oppose the grant of, or seek to have other information entered and considered in, this application. See also *Third Party Attempts to Protest or Otherwise Oppose the Grant of a Published Application*, 1269 *Off. Gaz. Pat. Office* 179 (April 22, 2003)

The instant third party attempt to oppose the issuance of a patent to this application appears in the guise of an attempted proceeding under the provisions of 37 CFR 1.33 by the putative sole inventor to unilaterally revoke the power of current counsel, to intervene in the prosecution herein to the exclusion of the other 2 named inventors, revoke the 3 named inventors' freely chosen counsel, appoint his own counsel, change the correspondence address, and permanently prevent the issuance of a patent to this application by way of an express abandonment that would also withdraw this application from issue, and which also entails the consideration of numerous pages of information submitted in support of the proposed action taking.

Under 37 CFR 3.71, the assignee of the entire interest may prosecute an application to the exclusion of the named inventor(s), or any previous assignee, and also revoke, or appoint, a power of attorney in an application or patent. Pursuant to 37 CFR 3.73(b) and MPEP 324, that assignee must present its showing to the Office, either prior to, or concurrently with, the paper that requests the action, and that documentation must be recorded at the USPTO. A party must establish that it is the owner of the entire interest, as the owner of only a part interest in an application does not have the sole right to control prosecution of the application. See In re Goldstein, 16 USPQ2d 1963, 1964 (Comm'r Pat. 1988; see also In re Scold, 195 USPQ 335, 335 (Comm'r Pat. 1976); Ex parte Harrison, 1925 Dec. Comm'r Pat. 122, 123 (Comm'r Pat. 1924). The procedures set forth in the regulations (e.g., 37 CFR 3.73(b)) serve to assure that papers filed with the USPTO in an application or patent are submitted on behalf of the owner(s) of the entire interest in the application or patent. See Goldstein, 16 USPQ2d at 1964. Stengel however, does not contend that he is the assignee of the interests of the other named inventors; rather Stengel simply asserts that he is the sole inventor.

Inventorship is the starting point for determining ownership, see University Patents, Inc. v. Kligman, 762 F.Supp. 1212, 1218-19, 20 USPQ2d 1401, 1405 (E.D. Pa. 1991), and unless there is an assignment, the USPTO will presume the named inventor to be the owner. See 37 CFR 3.73(a). Inspection of USPTO assignment records for the instant application fails to reveal that any written instrument has been recorded, or submitted for recordation, against this application, signed by Korber, that conveys his right title and interest herein to any other party, much less to Stengel. On March 3, 2006, the USPTO recorded an assignment of the interest of Babcock to CBT Supply, Inc. at reel 17249, frame 452. Accordingly Korber and Stengel in this application is presumed to retain his *pro rata* ownership interest (33 1/3%) herein. See 37 CFR 3.73(a); Ethicon v. United States Surgical Corp., 135 F.3d 1456, 1460, 45 USPQ2d 1545, 1547 (Fed. Cir. 1998), and CBT is a partial assignee by being the successor in title to Babcock's 33 1/3% interest. It follows that Stengel will not be permitted to unilaterally control the prosecution, much less expressly abandon this application and thus extinguish the interests of the other named inventors. Here, Korber and CBT are the owners of 66 2/3 % of the entire interest in this application and have not consented to the express abandonment of their entire property right in the patent, nor have they given a power of attorney to Trung. Such is sufficient basis for the USPTO to refrain from further processing the papers filed on behalf of Stengel sole. That is, Korber and CBT have a vested property right that can be canceled, revoked, or annulled only by proceedings that afford due process of law. See Iowa State University Research Foundation v. Sperry Rand Corp., 444 F.2d. 406, 410, 170 USPQ 374, 377 (4th Cir. 1971). The USPTO may not permit *ex parte* proceedings before it to extinguish such a property right. See Baker Hughes v. Kirk, 921 F.Supp. 801 (D.D.C. 1995).

It is noted that while the USPTO does not make *ex parte* inventorship determinations, it will consider, *inter partes*, inventorship issues

as part of an interference proceeding (also known as an originality contest, see Sewall v. Walters, 21 F.3d 411, 412, 30 USPQ2d 1356, 1357 (Fed. Cir. 1994)). Rather, when a person believes that he is the inventor of subject matter claimed in the patent or application of another, his remedy is to file an application, if he can, and provoke an interference with the other patent or application. The question of inventorship will then be decided by the Board of Patent Appeals and Interferences based on evidence taken inter partes. In re Cooper, 230 USPQ 638, 639 (Comm'r Pat. 1985); Sewall v. Walters, id.; MPEP 409.03(i).

For the reasons given above, rather than Stengel being the sole inventor who make take action herein unilaterally, Stengel sole is and remains at this time owner of but a one third interest, and under the circumstances of this case is regarded as a third party to the combined interests of the 3 named inventors and the one successor in title . As such, and given the total lack of compliance with either of the two regulations (37 CFR §§ 1.99 and 1.291) governing third party submissions of information in a published application, the documents submitted by the third party on February 6, 2006 cannot be permitted to remain in the file. See MPEP 1901.06 subsection V(a)(2). This communication is also the notice of non entry. See MPEP 1901.06 subsection V(a)(2). The USPTO will not take any further notice of or act on the express abandonment or revocation and power of attorney filed by or on behalf of Stengel sole. These documents are being closed to public inspection which is the IFW equivalent to removal of those documents from a paper file. See MPEP 1901.06 subsection V(a)(2).

Telephone inquiries related to this decision may be addressed to the undersigned at (571) 272-3217.

Brian Hearn
Petitions Examiner
Office of Petitions

UNITED STATES PATENT AND TRADEMARK OFFICE

Commissioner for Patents
United States Patent and Trademark Office
P.O. Box 1450
Alexandria, VA 22313-1450
www.uspto.gov

HUFFMAN LAW GROUP, P.C.
1832 N. CASCADE AVE.
COLORADO SPRINGS, CO 80907-7449

COPY MAILED

MAR 1 5 2005

OFFICE OF PETITIONS

In re Application of :
Jim Lundberg :
Application No. 10/616,473 : ON PETITION
Filed: July 9, 2003 :
Attorney Docket No. CNTR.2049 :

This is a decision on the petition under 37 CFR 1.137(a), filed January 31, 2005, which has been treated as a petition under 37 CFR 1.181, to withdraw the holding of abandonment.

The petition is **GRANTED**.

This application became abandoned for failure to timely pay the issue fee and publication fee, if applicable, on or before December 16, 2004. Accordingly, this application became abandoned on December 17, 2004. A Notice of Abandonment was mailed on January 31, 2005.

Petitioner asserts that the issue fee and publication fee were timely filed October 27, 2004. In support, petitioner has submitted a copy of the Issue Fee Transmittal that contains an executed Certificate of Mailing under 37 CFR 1.8 dated October 27, 2004.

Accordingly, the petition is granted and the holding of abandonment is withdrawn.

The $500.00 petition fee will be refunded by treasury check.

This application is being forwarded to Publishing Division for processing into a patent.

Telephone inquiries concerning this matter may be directed to the undersigned at (571)272-3228.

Edward J. Tannouse
Petitions Attorney
Office of Petitions/Patent
United States Patent and Trademark Office

UNITED STATES PATENT AND TRADEMARK OFFICE

COMMISSIONER FOR PATENTS
UNITED STATES PATENT AND TRADEMARK OFFICE
P.O. BOX 1450
ALEXANDRIA, VA 22313-1450
www.uspto.gov

GREGORY SMITH & ASSOCIATES
3900 NEWPARK MALL ROAD, 3RD FLOOR
NEWARK, CA 94560

COPY MAILED

JAN 0 6 2006

OFFICE OF PETITIONS

In re Application of	:	
Sean M. Carroll	:	
Application No. 10/616,484	:	ON PETITION
Filed: July 8, 2003	:	
Attorney Docket No. 317-1023CIP	:	

This is a decision on the petition under 37 CFR 1.137(b), filed October 11, 2005, to revive the above-identified application.

The petition is **GRANTED**.

The application became abandoned for failure to reply to the non-final Office action mailed September 3, 2004.

The petition satisfies the requirements of 37 CFR 1.137(b) in that petitioner has supplied (1) the reply in the form of an amendment; (2) the petition fee of $750; and (3) an adequate statement of unintentional delay.

The application file is being referred to Technology Center Art Unit 3723, for review of the amendment filed with the instant petition.

Telephone inquiries concerning this decision should be directed to the undersigned at (571) 272-3226.

Andrea Smith
Petitions Examiner
Office of Petitions

UNITED STATES PATENT AND TRADEMARK OFFICE

Commissioner for Patents
United States Patent and Trademark Office
P.O. Box 1450
Alexandria, VA 22313-1450
www.uspto.gov

Elliot B. Aronson
5001 Harbord Drive
Oakland, CA 94618

COPY MAILED

AUG 1 9 2004

OFFICE OF PETITIONS

In re Application of	:	
Jesse T. Quatse, et. al.	:	
Application No. 10/616,486	:	ON PETITION
Filed: July 8, 2003	:	
Attorney Docket No. 167.001	:	

This is a decision on the petition under 37 CFR 1.182, filed July 15, 2004, to change the order of the names of the inventors.

The petition is **GRANTED**.

The order of the names of inventors will be changed as follows:

1. Jesse T. Quatse
2. Anssi Karhinen
3. Eric G. Wasserman

The above-identified application is being forwarded to Technology Center Art Unit 3622 for examination, in due course.

Telephone inquiries concerning this decision should be directed to the undersigned at (703) 308-6711. After September 24, 2004, questions concerning this decision should be directed to (571) 272-3226.

Andrea Smith
Petitions Examiner
Office of Petitions
Office of the Deputy Commissioner
for Patent Examination Policy

Enclosure: Corrected Filing Receipt

UNITED STATES PATENT AND TRADEMARK OFFICE

Commissioner for Patents
United States Patent and Trademark Office
P.O. Box 1450
Alexandria, VA 22313-1450
www.uspto.gov

Date Mailed : 05/01/09

Patent No. : 7482091 B2
Patent Issued : 01/27/09
Docket No. : **T103 1530.3**

Re: Request for Certificate of Correction

Consideration has been given your request for the issuance of a certificate of correction for the above-identified patent under the provisions of Rule(s) 1.322.

Respecting the alleged errors in the documents filed on 02/19/09; please see attachments. **"Therefore, no correction(s) is in order here under United States Codes (U.S.C.) 254 and the Code of Federal Regulation (C.F.R.) 1322."**

In view of the foregoing, your request in this matter is hereby denied.

Lamonte M. Newsome
For Mary Diggs, Supervisor
Decisions & Certificates
Of Correction Branch
(703) 305-8309 or (703) 756-1574

WOMBLE CARLYLE SANDRIDGE & RICE, PLLC
ATTN: PATENT DOCKETING 32ND FLOOR
P.O. BOX 7037
ATLANTA GA 30357-0037

LMN

SPE RESPONSE FOR CERTIFICATE OF CORRECTION

Paper No.: _____

DATE : 3/03/09

TO SPE OF : ART UNIT 1795

SUBJECT : Request for Certificate of Correction for Appl. No.: 10616495 Patent No.: 7482091 B2

Please respond to this request for a certificate of correction within 7 days.

FOR IFW FILES:

Please review the requested changes/corrections as shown in the **COCIN** document(s) in the IFW application image. No new matter should be introduced, nor should the scope or meaning of the claims be changed.

Please complete the response (see below) and forward the completed response to scanning using document code **COCX**.

FOR PAPER FILES:

Please review the requested changes/corrections as shown in the attached certificate of correction. Please complete this form (see below) and forward it with the file to:

Certificates of Correction Branch (CofC)
South Tower - 9A22
Palm Location 7580
You can fax the Directors/SPE response to 571-270-9990

LAMONTE NEWSOME
Certificates of Correction Branch
703-308-9390 ext. 112

Thank You For Your Assistance

The request for issuing the above-identified correction(s) is hereby:
Note your decision on the appropriate box.

- ☐ **Approved** — **All** changes apply.
- ☐ **Approved in Part** — Specify below which changes **do not** apply.
- ☒ **Denied** — State the reasons for denial below.

Comments: Claim 3 was previously canceled; There would be no antecedent basis for "the interconnect" in claim 7, if amended; There is no recitation in claim 8 to "cell"; There is no recitation in claim 9 to "the member"; and claims 10 and 11 were previously deleted

SPE RESPONSE FOR CERTIFICATE OF CORRECTION

[signature] 3/5/09

SPE - Art Unit 1795

SPE Art Unit

nd Trademark Office

UNITED STATES PATENT AND TRADEMARK OFFICE

Commissioner for Patents
United States Patent and Trademark Office
P.O. Box 1450
Alexandria, VA 22313-1450
www.uspto.gov

Date Mailed : 05/01/09

Patent No. : 7482091 B2
Patent Issued : 01/27/09
Docket No. : **08935-292001 / M-5028**

Re: Request for Certificate of Correction

Consideration has been given your request for the issuance of a certificate of correction for the above-identified patent under the provisions of Rule(s) 1.322.

Respecting the alleged errors in the documents filed on 02/19/09; please see attachments. **"Therefore, no correction(s) is in order here under United States Codes (U.S.C.) 254 and the Code of Federal Regulation (C.F.R.) 1322."**

In view of the foregoing, your request in this matter is hereby denied.

Lamonte M. Newsome

Lamonte M. Newsome
For Mary Diggs, Supervisor
Decisions & Certificates
Of Correction Branch
(703) 305-8309 or (703) 756-1574

FISH & RICHARDSON PC
P.O. BOX 1022
MINNEAPOLIS MN 55440-1022

LMN

SPE RESPONSE FOR CERTIFICATE OF CORRECTION

Paper No.: _____

DATE : 3/03/09

TO SPE OF : ART UNIT 1795

SUBJECT : Request for Certificate of Correction for Appl. No.: 10616495 Patent No.: 7482091 B2

Please respond to this request for a certificate of correction within 7 days.

FOR IFW FILES:

Please review the requested changes/corrections as shown in the **COCIN** document(s) in the IFW application image. No new matter should be introduced, nor should the scope or meaning of the claims be changed.

Please complete the response (see below) and forward the completed response to scanning using document code **COCX**.

FOR PAPER FILES:

Please review the requested changes/corrections as shown in the attached certificate of correction. Please complete this form (see below) and forward it with the file to:

Certificates of Correction Branch (CofC)
South Tower - 9A22
Palm Location 7580
You can fax the Director/SPE response to 571-270-9990

LAMONTE NEWSOME
Certificates of Correction Branch
703-308-9390 ext. 112

Thank You For Your Assistance

The request for issuing the above-identified correction(s) is hereby:
Note your decision on the appropriate box.

- ☐ **Approved** — All changes apply.
- ☐ **Approved in Part** — Specify below which changes **do not** apply.
- ☒ **Denied** — State the reasons for denial below.

Comments: Claim 3 was previously canceled; There would be no antecedent basis for "the interconnect" in claim 7, if amended; There is no recitation in claim 8 to "cell"; There is no recitation in claim 9 to "the member"; and claims 10 and 11 were previously deleted

SPE RESPONSE FOR CERTIFICATE OF CORRECTION

[signature] 3/5/09

SPE - Art Unit 1795

SPE Art Unit

nd Trademark Office

IN THE UNITED STATES PATENT AND TRADEMARK OFFICE

Applicant	: Jordan T. Bourilkov et al.	Art Unit	: 1745
Patent No.	: 7,482,091	Examiner	: Thomas H. Parsons
Issue Date	: January 27, 2009	Conf. No.	: 9718
Serial No.	: 10/616,495		
Filed	: July 9, 2003		
Title	: FUEL CARTRIDGE INTERCONNECT FOR PORTABLE FUEL CELLS		

Attn.: Certificate of Corrections Branch
Commissioner for Patents
P.O. Box 1450
Alexandria, VA 22313-1450

TRANSMITTAL OF REQUEST FOR CERTIFICATE OF CORRECTION

Applicant hereby requests that a certificate of correction be issued for the above patent in accordance with the attached request.

One or more of the errors sought to be corrected were made by applicant. Please apply the $100.00 fee and any charges or credits to Deposit Account No. 06-1050, referencing attorney docket no. 08935-292001.

Respectfully submitted,

Date: February 19, 2009

/Robert C. Nabinger/
Robert C. Nabinger
Reg. No. 33,431

Fish & Richardson P.C.
225 Franklin Street
Boston, MA 02110
Telephone: (617) 542-5070
Facsimile: (877) 769-7945

22134691.doc

CERTIFICATE OF MAILING BY EFS-WEB FILING

I hereby certify that this paper was filed with the Patent and Trademark Office using the EFS-WEB system on this date: February 19, 2009

Staple Here Only

UNITED STATES PATENT AND TRADEMARK OFFICE
CERTIFICATE OF CORRECTION

PATENT NO. .: 7,482,091

APPLICATION NO .: 10/616,495

DATED .: JANUARY 27, 2009

INVENTOR(S) .: JORDAN T. BOURILKOV, ANDREW G. GILICINSKI, DAVID N. KLEIN AND JOHN ROTONDO

It is certified that an error appears in the above-identified patent and that said Letters Patent is hereby corrected as shown below:

line 2
In claim 3, delete "configure" and insert --configured--.

line 3
In claim 7, delete "the member" and insert --the interconnect--.

line 7
In claim 8, delete "cell" and insert --fuel cell--.

line 3
In claim 9, delete "the member" and insert --the interconnect--.

line 5
In claim 10, delete "of" and insert --of the--.

line 5
In claim 11, delete "a either" and insert --either a--.

line 27
In claim 11, delete "or" and insert --of--.

MAILING ADDRESS OF SENDER:

Robert C. Nabinger
Fish & Richardson P.C.
P.O. Box 1022
Minneapolis, Minnesota 55440-1022

SPE RESPONSE FOR CERTIFICATE OF CORRECTION

Paper No.:

DATE : 6/4/2009

TO SPE OF : ART UNIT 1795

SUBJECT : Request for Certificate of Correction on Patent No.:

A response is requested with respect to the accompanying request for a certificate of correction.

Please complete this form and return with file, within **7** days to:
Certificates of Correction Branch - ST (South Tower) 9A22
Palm location **7590** - Tel. No. (703) 305-8309

With respect to the change(s) requested, correcting Office and/or Applicant's errors, should the patent read as shown in the certificate of correction? No new matter should be introduced, nor should the scope or meaning of the claims be changed.

Thank You For Your Assistance

Certificates of Correction Branch

The request for issuing the above-identified correction(s) is hereby:

Note your decision on the appropriated box.

☒ **Approved** — All changes apply.

☐ **Approved in Part** — Specify below which changes **do not** apply.

☐ **Denied** — State the reasons for denial below.

Comments:

SPE RESPONSE FOR CERTIFICATE OF CORRECTION

Paper No.: 07/06

DATE : April 4, 2006

TO SPE OF : ART UNIT 2877

SUBJECT : Request for Certificate of Correction for Appl. No.: 10/616504 Patent No.: 6,950,192

Please respond to this request for a certificate of correction within 7 days.

Please review the requested changes/corrections as shown in the **COCIN** document(s) in the IFW application image. No new matter should be introduced, nor should the scope or meaning of the claims be changed.

Please complete the response (see below) and forward the completed response to scanning using document code **COCX**.

Magdalene Talley

Certificates of Correction Branch

703-308-9390 ext. 116

Thank You For Your Assistance

The request for issuing the above-identified correction(s) is hereby:

Note your decision on the appropriate box.

- ☑ **Approved** — **All** changes apply.
- ☐ **Approved in Part** — Specify below which changes **do not** apply.
- ☐ **Denied** — State the reasons for denial below.

Comments: _____

SPE

2877
Art Unit

UNITED STATES DEPARTMENT OF COMMERCE
Patent and Trademark Office
ASSISTANT SECRETARY OF COMMERCE AND
COMMISSIONER OF PATENTS AND TRADEMARKS
Washington, D.C. 20231

Date: 2/6/09

Patent No : 7,344,704 B2
Application No: 10/616,511
Issued : March 18, 2008
Inventor : Misselwitz, et al.
Title : **USE OF PERFLUOROALKYL-CONTAINING METAL COMPLEXES AS CONTRAST MEDIA IN MR-IMAGING FOR VISUALIZATION OF INTRAVASCULAR THROMBI**

Re: Request for Certificate of Correction

Consideration has been given your request for the issuance of a certificate of correction, for the above-identified patent under the provision of Rule 1.322 or R 1.323.

Respecting the alleged error, in column 51, line 5, has been changed to column 51, line 9, Therefore, no correction(s) is in order here under United States Codes (U.S.C.) 254 or 255 the Code of Federal Regulation (C.F.R.) R1.322 or R1.323.

A certificate of correction will be issued to correct the error noted in your request.

Further correspondence concerning this matter should be filed and directed to Decisions and Certificates of Correction Branch. Any response must be filed within a four week period.

Valerie Jackson
Mary F. Diggs
Decisions & Certificates
of Correction Branch
(703) 308-9390 ext. # 114

Millen, White, Zelano & Branigan, P.C.
2200 Clarendon Blvd, Suite 1400
Arlington, VA 222 1

vj/MFD

UNITED STATES PATENT AND TRADEMARK OFFICE

Commissioner for Patents
United States Patent and Trademark Office
P.O. Box 1450
Alexandria, VA 22313-1450
www.uspto.gov

FISH & RICHARDSON
PO BOX 1022
MINNEAPOLIS MN 55440-1022

COPY MAILED

JAN 19 2006

OFFICE OF PETITIONS

In re Reissue Application No. 10/616,530 :
Filed: July 10, 2003 :
Original Patent No 5,056,892 :
Issue Date: October 15, 1991 :ON PETITION
Original Application No. 07/472,621 :
Filed: January 30, 1990 :
Inventor: Cobb. :

This is a decision on the petition under 37 CFR 1.182 filed September 6, 2005, by a third party requesting a copy of the above-identified reissue application.

The petition is **dismissed**.

Petitioner was understandably frustrated with his recounted unsuccessful efforts to obtain a copy of the instant application, and sought an extraordinary remedy to obtain a copy immediately. Petitioner is presumed to be aware that this application exists only as an electronic file known as an Image File Wrapper (IFW), and that there is no physical, paper file that can be located or transported anywhere in the USPTO for copying purposes.

It should be noted that 37 CFR 1.182 is not a mechanism for avoiding the requirements of the established rules and procedures. See Hicks v. Costello, 1903 Dec. Comm'r Pat. 123, 125 (1903). Here, the established rules and procedures permit petitioner to obtain his requested copy in several ways. As petitioner acknowledges he has tracked this reissue application on public PAIR, then petitioner demonstrably has Internet access, and can obtain the entire file record and himself print some or all of the entire IFW record. Alternately, petitioner can "click" on the "*i*" at the top right of the screen for this application on public PAIR and enter his on-line request for a certified a copy of either the application-as-filed- or the entire file wrapper.

This service is available through the auspices of the Patent Electronic Business Center (EBC) at the USPTO. The Patent EBC is a complete customer service center that supports all Patent e-business products and service applications, and can be reached at 703-305-3028 or toll-free at 866-217-9197 between the hours of 6 am and 12 midnight Monday through Friday ET, or by e-mail to ebc@uspto.gov, should petitioner have any additional problems.

Petitioner may also contact the office of Public Records (OPR) for certified copies of issued/published patent applications as filed and patent file wrappers may also be delivered over the Internet or mailed to pettioner on CDROM. Internet delivery is also available for uncertified copies of patents and patent application publications. In addition, uncertified copies of patents and trademarks may be delivered by fax. Information is provided here for ordering via Telephone, Mail, Fax, or E-mail.

The OPR Customer Service Line is: (571) 272-3150 or (800) 972-6382 Customer Service staff are available between 8:30 a.m. and 8:00 p.m. U.S. Eastern Standard Time.

On a one-time basis a courtesy copy of this decision is being mailed to third party petitioner. The USPTO will not undertake dual correspondence.

This application is being referred to the Technology Center.

Telephone inquiries related to this decision should be directed to the undersigned at (571)272-3217.

Brian Hearn
Petitions Examiner
Office of Petitions

cc:
Marc Rossi
Rossi, Kimms & McDowell
PO Box 826
Ashburn VA 21048-0826

UNITED STATES PATENT AND TRADEMARK OFFICE

Commissioner for Patents
United States Patent and Trademark Office
P.O. Box 1450
Alexandria, VA 22313-1450
www.uspto.gov

In re Patent No. 6967464
Issue Date: November 22,2005
Application No. 10616545
Filed: July 9,2003
Attorney Docket No. DT-6563

:DECISION GRANTING PETITION
:UNDER 37 CFR 1.378(c)

This is a decision on the electronic petition, filed June 30,2010 ,under 37 CFR 1.378(c) to accept the unintentionally delayed payment of the 3.5 year maintenance fee for the above-identified patent.

The petition is **GRANTED**.

The maintenance fee is accepted, and the above-identified patent reinstated as of June 30,2010 .
This decision also constitutes notice that the fee has been accepted. An electronic copy of the petition and this decision has been created as an entry in the Image File Wrapper. Nevertheless, petitioner should print and retain an independent copy.

Telephone inquiries related to this electronic decision should be directed to the Electronic Business Center at 1-866-217-9197.

PTO/SB/66 (03-09)
Approved for use through 03/31/2012. OMB 0651-0016
U.S. Patent and Trademark Office: U.S. DEPARTMENT OF COMMERCE
Under the Paperwork Reduction Act of 1995, no persons are required to respond to a collection of information unless it displays valid OMB control number.

PETITION TO ACCEPT UNINTENTIONALLY DELAYED PAYMENT OF MAINTENANCE FEE IN AN EXPIRED PATENT (37 CFR 1.378(c))

Patent Number	Issue Date (YYYY-MM-DD)	Application Number	Filing Date (YYYY-MM-DD)	Docket Number (if applicable)
6967464	2005-11-22	10616545	2003-07-09	309,043(DT-6563)

CAUTION: Maintenance fee (and surcharge, if any) payment must correctly identify: (1) the patent number and (2) the application number of the actual U.S. application leading to issuance of that patent to ensure the fee(s) is/are associated with the correct patent. 37 CFR 1.366(c) and (d).

SMALL ENTITY
☐ Patentee claims, or has previously claimed, small entity status. See 37 CFR 1.27.

LOSS OF ENTITLEMENT TO SMALL ENTITY STATUS
☐ Patentee is no longer entitled to small entity status. See 37 CFR 1.27(g)

NOT Small Entity		Small Entity	
Fee	Code	Fee	Code
◉ 3 ½ year	(1551)	○ 3 ½ year	(2551)
○ 7 ½ year	(1552)	○ 7 ½ year	(2552)
○ 11 ½ year	(1553)	○ 11 ½ year	(2553)

SURCHARGE
The surcharge required by 37 CFR 1.20(i)(2) (Fee Code 1558) must be paid as a condition of accepting unintentionally delayed payment of the maintenance fee.

MAINTENANCE FEE (37 CFR 1.20(e)-(g))
The appropriate maintenance fee must be submitted with this petition.

STATEMENT
THE UNDERSIGNED CERTIFIES THAT THE DELAY IN PAYMENT OF THE MAINTENANCE FEE TO THIS PATENT WAS UNINTENTIONAL

PETITIONER(S) REQUEST THAT THE DELAYED PAYMENT OF THE MAINTENANCE FEE BE ACCEPTED AND THE PATENT REINSTATED

THIS PORTION MUST BE COMPLETED BY THE SIGNATORY OR SIGNATORIES

37 CFR 1.378(d) states: "Any petition under this section must be signed by an attorney or agent registered to practice before the Patent and Trademark Office, or by the patentee, the assignee, or other party in interest."

I certify, in accordance with 37 CFR 1.4(d)(4) that I am

○ An attorney or agent registered to practice before the Patent and Trademark Office

○ A sole patentee

○ A joint patentee; I certify that I am authorized to sign this submission on behalf of all the other patentees.

○ A joint patentee; all of whom are signing this e-petition

○ The assignee of record of the entire interest

Patent Practitioner			
A signature of the applicant or representative is required in accordance with 37 CFR 1.33 and 10.18. Please see 37 CFR 1.4(d) for the form of the signature			
Signature	/alexander zinchuk/	Date (YYYY-MM-DD)	2010-06-30
Name	Alexander Zinchuk	Registration Number	30541

This collection of information is required by 37 CFR 1.378(c). The information is required to obtain or retain a benefit by the public which is to file (and by the USPTO to process) an application. Confidentiality is governed by 35 U.S.C. 122 and 37 CFR 1.11 and 1.14. This collection is estimated to take 1 hour to complete, including gathering, preparing, and submitting the completed application form to the USPTO. Time will vary depending upon the individual case. Any comments on the amount of time you require to complete this form and/ or suggestions for reducing this burden, should be sent to the Chief Information Officer, U.S. Patent and Trademark Office, U.S. Department of Commerce, P.O. Box 1450, Alexandria, VA 22313-1450. DO NOT SEND FEES OR COMPLETED FORMS TO THIS ADDRESS. **This form can only be used when in conjunction with EFS-Web. If this form is mailed to the USPTO, it may cause delays in reinstating the patent.**

Privacy Act Statement

The Privacy Act of 1974 (P.L. 93-579) requires that you be given certain information in connection with your submission of the attached form related to a patent application or patent. Accordingly, pursuant to the requirements of the Act, please be advised that: (1) the general authority for the collection of this information is 35 U.S.C. 2(b)(2); (2) furnishing of the information solicited is voluntary; and (3) the principal purpose for which the information is used by the U.S. Patent and Trademark Office is to process and/or examine your submission related to a patent application or patent. If you do not furnish the requested information, the U.S. Patent and Trademark Office may not be able to process and/or examine your submission, which may result in termination of proceedings or abandonment of the application or expiration of the patent.

The information provided by you in this form will be subject to the following routine uses:

1. The information on this form will be treated confidentially to the extent allowed under the Freedom of Information Act (5 U.S.C. 552) and the Privacy Act (5 U.S.C. 552a). Records from this system of records may be disclosed to the Department of Justice to determine whether the Freedom of Information Act requires disclosure of these records.

2. A record from this system of records may be disclosed, as a routine use, in the course of presenting evidence to a court, magistrate, or administrative tribunal, including disclosures to opposing counsel in the course of settlement negotiations.

3. A record in this system of records may be disclosed, as a routine use, to a Member of Congress submitting a request involving an individual, to whom the record pertains, when the individual has requested assistance from the Member with respect to the subject matter of the record.

4. A record in this system of records may be disclosed, as a routine use, to a contractor of the Agency having need for the information in order to perform a contract. Recipients of information shall be required to comply with the requirements of the Privacy Act of 1974, as amended, pursuant to 5 U.S.C. 552a(m).

5. A record related to an International Application filed under the Patent Cooperation Treaty in this system of records may be disclosed, as a routine use, to the International Bureau of the World Intellectual Property Organization, pursuant to the Patent Cooperation Treaty.

6. A record in this system of records may be disclosed, as a routine use, to another federal agency for purposes of National Security review (35 U.S.C. 181) and for review pursuant to the Atomic Energy Act (42 U.S.C. 218(c)).

7. A record from this system of records may be disclosed, as a routine use, to the Administrator, General Services, or his/her designee, during an inspection of records conducted by GSA as part of that agency's responsibility to recommend improvements in records management practices and programs, under authority of 44 U.S.C. 2904 and 2906. Such disclosure shall be made in accordance with the GSA regulations governing inspection of records for this purpose, and any other relevant (i.e., GSA or Commerce) directive. Such disclosure shall not be used to make determinations about individuals.

8. A record from this system of records may be disclosed, as a routine use, to the public after either publication of the application pursuant to 35 U.S.C. 122(b) or issuance of a patent pursuant to 35 U.S.C. 151. Further, a record may be disclosed, subject to the limitations of 37 CFR 1.14, as a routine use, to the public if the record was filed in an application which became abandoned or in which the proceedings were terminated and which application is referenced by either a published application, an application open to public inspections or an issued patent.

9. A record from this system of records may be disclosed, as a routine use, to a Federal, State, or local law enforcement agency, if the USPTO becomes aware of a violation or potential violation of law or regulation.

UNITED STATES PATENT AND TRADEMARK OFFICE

Commissioner for Patents
United States Patent and Trademark Office
P.O. Box 1450
Alexandria, VA 22313-1450
www.uspto.go

BORGWARNER INC.
C/O BROWN & MICHAELS, PC
400 M&T BANK BUILDING
118 N. TIOGA STREET
ITHACA NY 14850

COPY MAILED
JAN 13 2010

In re Patent No. 6,932,033	:	
Issue Date: August 23, 2005	:	
Application No. 10/616,554	:	ON PETITION
Filed: July 10, 2003	:	
Attorney Docket No. BW-DKT03059	:	

This is a decision on the petition under 37 CFR 1.378(c), filed October 26, 2009, to accept the unintentionally delayed payment of a maintenance fee for the above-identified patent.

The petition is **GRANTED**.

This patent expired on August 24, 2009 for failure to pay the first maintenance fee. Since this petition was submitted within twenty-four months after the six-month grace period provided in 37 CFR 1.362(e), the petition was timely filed under the provisions of 37 CFR 1.378(c).

The maintenance fee is hereby accepted and the above-identified patent is reinstated as of the mail date of this decision.

It is not apparent whether the person signing the statement of unintentional delay was in a position to have firsthand or direct knowledge of the facts and circumstances of the delay at issue. Nevertheless, such statement is being treated as having been made as the result of a reasonable inquiry into the facts and circumstances of such delay. In the event that such an inquiry has not been made, petitioner must make such an inquiry. If such inquiry results in the discovery that the delay in paying the maintenance fee under 37 CFR 1.378(c) was intentional, petitioner must notify the Office.

There is no indication that the person signing the petition was ever given a power of attorney in the above application. If the person signing the petition desires to receive future correspondence regarding this application, the appropriate power of attorney document must be submitted. While a courtesy copy of this decision is being mailed to the person signing the petition, all future

correspondence will be directed to the address currently of record until appropriate instructions are received.

Telephone inquiries concerning this decision should be directed to the undersigned at (571) 272-3208.

The patent file is being referred to Files Repository.

/KOC/
Karen Creasy
Petitions Examiner
Office of Petitions

cc:

JAMES C. WRAY
1493 CHAIN BRIDGE ROAD, SUITE 300
MCLEAN VA 22101

UNITED STATES PATENT AND TRADEMARK OFFICE

Commissioner for Patents
United States Patent and Trademark Office
P.O. Box 1450
Alexandria, VA 22313-1450
www.uspto.gov

HICKMAN PALERMO TRUONG & BECKER, LLP
2055 GATEWAY PLACE
SUITE 550
SAN JOSE, CA 95110

COPY MAILED

MAY 23 2008

OFFICE OF PETITIONS

In re Application of :
Gargi Nalawade :
Application No. 10/616,555 : ON PETITION
Filed: July 9, 2003 :
Attorney Docket No. 50325-0758 :

This is a decision on the petition under 37 CFR 1.137(b), filed January 18, 2008, to revive the above-identified application.

The petition is **GRANTED**.

The above-identified application became abandoned for failure to reply in a timely manner to the non-final Office action mailed May 18, 2007, which set a shortened statutory period for reply of three (3) months. No extension of time under the provisions of 37 CFR 1.136(a) were obtained. Accordingly, the above-identified application became abandoned on August 19, 2007.

An extension of time under 37 CFR 1.136 must be filed prior to the expiration of the maximum extendable period for reply. See In re Application of S., 8 USPQ2d 1630, 1631 (Comm'r Pats. 1988). Accordingly, since the $1050 extension of time submitted with the petition on January 18, 2008 was subsequent to the maximum extendable period for reply, this fee is unnecessary and will be credit to petitioner's deposit account.

Telephone inquiries concerning this decision should be directed to Irvin Dingle at (571) 272-3210.

This matter is being referred to Technology Center AU 2146 for further processing.

Irvin Dingle
Petitions Examiner
Office of Petitions

UNITED STATES PATENT AND TRADEMARK OFFICE

Commissioner for Patents
United States Patent and Trademark Office
P.O. Box 1450
Alexandria, VA 22313-1450
www.uspto.gov

MAILED
FROM DIRECTORS OFFICE

MAR 0 4 2005

TECHNOLOGY CENTER 3600

PAUL S MADAN
MADAN, MOSSMAN & SRIRAM, PC
2603 AUGUSTA, SUITE 700
HOUSTON TX 77057-1130

In re Application of :
John P. Castagna et al. :
SERIAL NO. : 10/616,557 :
FILED: July 9, 2003 :
FOR: DETERMINATION OF FLUID PROPERTIES OF EARTH FORMATIONS USING STOCHASTIC INVERSION

DECISION ON PETITION

This is a decision on the request filed July 3, 2003 to waive the requirements of 37 CFR 1.84(a) so as to permit the application to include a color drawing. Applicant has shown that the use of color is an essential element in the representation of the drawing.

Petition Granted.

Thomas H. Tarcza
SPE, Art Unit 3662
703-306-4171

UNITED STATES PATENT AND TRADEMARK OFFICE

Commissioner for Patents
United States Patent and Trademark Office
P.O. Box 1450
Alexandria, VA 22313-1450
www.uspto.gov

VERTEX PHARMACEUTICALS INC.
130 WAVERLY STREET
CAMBRIDGE, MA 02139-4242

COPY MAILED

APR 19 2007

OFFICE OF PETITIONS

In re Application of	:	
Mark Ledeboer et al	:	
Application No. 10/616,560	:	DECISION ON PETITION
Filed: July 9, 2003	:	
Atty Docket No. VPI/02-06 US	:	

This is a decision on the petition under 37 CFR 1.137(b), filed August 10, 2006, to revive the above-identified application.

The petition is **GRANTED**.

The application became abandoned for failure to reply in a timely manner to the non-final Office action mailed September 13, 2005, which set a shortened statutory period for reply of three (3) months. No extensions of time were obtained under the provisions of 37 CFR 1.136(a). Accordingly, the application became abandoned on December 14, 2005. A Notice of Abandonment was mailed on May 18, 2006.

The petition satisfies the requirements of 37 CFR 1.137(b) in that petitioner has supplied (1) the reply, (2) the petition fee of $1,500, and (3) a proper statement of unintentional delay. Accordingly, the reply to the non-final Office action of September 13, 2005 is accepted as being unintentionally delayed.

It is not apparent whether the person signing the statement of unintentional delay was in a position to have firsthand or direct knowledge of the facts and circumstances of the delay at issue. Nevertheless, such statement is being treated as having been made as the result of a reasonable inquiry into the facts and circumstances of such delay. See 37 CFR 10.18(b) and Changes to Patent Practice and Procedure; Final Rule Notice, 62 Fed. Reg. 53131, 53178 (October 10, 1997), 1203 Off. Gaz. Pat. Office 63, 103 (October 21, 1997). In the event that such an inquiry has not been made, petitioner must make such an inquiry. If such inquiry results in the discovery that it is not correct that the entire delay in filing the required reply from the due date for

the reply until the filing of a grantable petition pursuant to 37 CFR 1.137(b) was unintentional, petitioner must notify the Office.

Telephone inquiries concerning this decision should be directed to the undersigned at (571) 272-3218.

This application is being referred to Technology Center AU 1624 for appropriate action in the normal course of business on the reply received August 10, 2006.

Frances Hicks
Petitions Examiner
Office of Petitions

UNITED STATES PATENT AND TRADEMARK OFFICE

COMMISSIONER FOR PATENTS
UNITED STATES PATENT AND TRADEMARK OFFICE
P.O. BOX 1450
ALEXANDRIA, VA 22313-1450
www.uspto.gov
DW 03-04

FITCH EVEN TABIN AND FLANNERY
120 SOUTH LA SALLE STREET
SUITE 1600
CHICAGO IL 60603-3406

COPY MAILED

MAR 1 5 2004

OFFICE OF PETITIONS

In re Application of	:
Cavallaro et al.	: DECISION GRANTING
Application No. 10/616,598	: PETITION
Filed: 10 July, 2003	:
Attorney Docket CE09078R (74086)	:

This is a decision on the petition, filed on 11 December, 2003, requesting that the above-identified application, without drawings, be accorded a filing date of 10 July, 2003.

The application was filed on 10 July, 2003, without drawings.[1] Accordingly, on 6 October, 2003, Initial Patent Examination Division mailed a "Notice of Incomplete Nonprovisional Application" stating that no filing date had been assigned because the application was deposited without drawings, and requiring drawings be filed if necessary. An abstract in compliance with 37 CFR 1.72(b) was also required.

In response, on 11 December, 2003 (certificate of mailing date 8 December, 2003) the present petition was filed. The petition states that the drawings are not necessary for an understanding of the subject matter sought to be patented. Petitioners request that the application, without drawings, be accorded a filing date of 10 July, 2003.

It has been USPTO practice to treat an application that contains at least one process or method claim as an application for which a drawing is not necessary for an understanding of the invention under 35 U.S.C. 113 (first sentence).[2] A review of the record reveals that Claims 18-21 are method claims. Therefore, the present application is deemed to be an application which does not require a drawing for an understanding of the invention.

---

[1] 35 U.S.C. § 113 (first sentence) requires a drawing "where necessary for the understanding of the subject matter sought to be patented."

[2] MPEP 601.01(f).

Accordingly, the application, as filed, is entitled to a filing date.

The petition is granted. The $130.00 petition fee is unnecessary, and will be credited to counsel's deposit account, No. 06-1135 as authorized in the present petition.

The "Notice of Incomplete Nonprovisional Application" mailed on 8 October, 2003, was sent in error and is hereby vacated to the extent that it stated that the application was incomplete because the application was deposited without drawings.

It is noted that petitioners have not filed an abstract in compliance with 37 CFR 1.72(b).

The application is being forwarded to the Office of Initial Patent Examination for further processing with a filing date of 10 July, 2003, without drawings.

Telephone inquiries specific to this matter should be directed to the undersigned at 703.308.6918.

D Wood

Douglas I. Wood
Senior Petitions Attorney
Office of Petitions

UNITED STATES PATENT AND TRADEMARK OFFICE

Commissioner for Patents
United States Patent and Trademark Office
P.O. Box 1450
Alexandria, VA 22313-1450
www.uspto.gov

MAILED

APR 28 2010

OFFICE OF PETITIONS

WILLIAM C. MILKS, III
401 FLORENCE STREET
PALO ALTO CA 94301

In re Application of	:	
Christophe PIERRAT, et al	:	
Application No. 10/616,603	:	DECISION ON PETITION
Filed: July 10, 2003	:	
Attorney Docket No. FTIS 1001-1	:	

This is a decision on the petition under the unintentional provisions of 37 CFR 1.137(b), filed February 12, 2010, to revive the above-identified application.

The petition is **GRANTED**.

The application became abandoned for failure to reply in a timely manner to the non-final Office action mailed, October 7, 2005, which set a shortened statutory period for reply of three (3) months. No extensions of time under the provisions of 37 CFR 1.136(a) were obtained. Accordingly, the application became abandoned on January 8, 2006.

The petition satisfies the requirements of 37 CFR 1.137(b) in that petitioner has supplied (1) the reply in the form of an amendment, (2) the petition fee of $1620; and (3) an adequate statement of unintentional delay.

This application has been abandoned for an extended period of time. The Patent and Trademark Office is relying on petitioner's duty of candor and good faith and accepting the statement of unintentional delay pursuant to 37 CFR 1.137(b)(3).

37 CFR 1.137(b)(3) requires a statement that "the entire delay in filing the required reply from the due date for the reply until the filing of a grantable petition pursuant to 37 CFR 1.137(b) was unintentional." Since the statement appearing in the petition varies from the language required by 37 CFR 1.137(b)(3), the statement is being construed as the required statement. Petitioner must notify the Office if this is **not** a correct reading of the statement appearing in the petition.

Telephone inquiries concerning this decision should be directed to the undersigned at (571) 272-6735.

This application is being referred to Technology Center AU 1756 for appropriate action by the Examiner in the normal course of business on the reply received February 12, 2010.

/dcg/
Diane C. Goodwyn
Petitions Examiner
Office of Petitions

UNITED STATES PATENT AND TRADEMARK OFFICE

UNITED STATES DEPARTMENT OF COMMERCE
United States Patent and Trademark Office
Address: COMMISSIONER FOR PATENTS
P.O. Box 1450
Alexandria, Virginia 22313-1450
www.uspto.gov

IBM Corporation
Intellectual Property Law, Dept 917/ Bldg. 006-1
3605 Highway 52 North
Rochester, MN 55901-7929

Mail Date: 04/21/2010

Applicant	: Daniel Charles Birkestrand	: DECISION ON REQUEST FOR
Patent Number	: 7594231	: RECALCULATION of PATENT
Issue Date	: 09/22/2009	: TERM ADJUSTMENT IN VIEW
Appliction No	: 10/616,675	: OF WYETH AND NOTICE OF INTENT TO
Filed	: 07/10/2003	: ISSUE CERTIFICATE OF CORRECTION
		:

The Request for Recalculation is **GRANTED** to the extent indicated.

The patent term adjustment has been determined to be **1076** days. The USPTO will *sua sponte* issue a certificate of correction reflecting the amount of PTA days determined by the recalculation.

Prior to the issuance of the certificate of correction, the USPTO will afford patentee an opportunity to be heard and request reconsideration. Accordingly, patentee has **one month or thirty (30) days**, whichever is longer, to file a request for reconsideration of this patent term adjustment calculation. See 35 U.S.C. 154(b)(3)(B)(ii) and 37 CFR 1.322(a)(4). No extensions of time will be granted under 37 CFR 1.136.

Patentee should use document code PET.OP if electronically filing a request for reconsideration of this patent term adjustment calculation. The patentee must also include the information required by 37 CFR 1.705(b)(2) and the fee required by 37 CFR 1.18(e). If patentee does not file a timely request for reconsideration of this patent term adjustment calculation including the information required by 37 CFR 1.705(b)(2) and the fee required by 37 CFR 1.18(e), the USPTO will issue a certificate of correction reflecting the PTA determination noted above.

Patentee should be aware that in order to preserve the right to review in the United States District Court for the District of Columbia of the USPTO patent term adjustment determination, patentee must ensure that he or she also take the steps required under 35 U.S.C. 154(b)(4)(A) in a timely manner. Nothing in the request for recalculation should be construed as providing an alternative time frame for commencing a civil action under 35 U.S.C. 154(b)(4)(A).

Any questions concerning this decision should be directed to the Office of Patent Legal Administration at 571-272-7702.

UNITED STATES PATENT AND TRADEMARK OFFICE

UNITED STATES DEPARTMENT OF COMMERCE
United States Patent and Trademark Office
Address: COMMISSIONER FOR PATENTS
P.O. Box 1450
Alexandria, Virginia 22313-1450
www.uspto.gov

MARTIN & ASSOCIATES, LLC
P.O. BOX 548
CARTHAGE, MO 64836-0548

Mail Date: 04/21/2010

Applicant	: Daniel Charles Birkestrand	: DECISION ON REQUEST FOR
Patent Number	: 7627506	: RECALCULATION of PATENT
Issue Date	: 12/01/2009	: TERM ADJUSTMENT IN VIEW
Appliction No	: 10/616,676	: OF WYETH AND NOTICE OF INTENT TO
Filed	: 07/10/2003	: ISSUE CERTIFICATE OF CORRECTION
		:

The Request for Recalculation is **GRANTED** to the extent indicated.

The patent term adjustment has been determined to be **1199** days. The USPTO will *sua sponte* issue a certificate of correction reflecting the amount of PTA days determined by the recalculation.

Prior to the issuance of the certificate of correction, the USPTO will afford patentee an opportunity to be heard and request reconsideration. Accordingly, patentee has **one month or thirty (30) days**, whichever is longer, to file a request for reconsideration of this patent term adjustment calculation. See 35 U.S.C. 154(b)(3)(B)(ii) and 37 CFR 1.322(a)(4). No extensions of time will be granted under 37 CFR 1.136.

Patentee should use document code PET.OP if electronically filing a request for reconsideration of this patent term adjustment calculation. The patentee must also include the information required by 37 CFR 1.705(b)(2) and the fee required by 37 CFR 1.18(e). If patentee does not file a timely request for reconsideration of this patent term adjustment calculation including the information required by 37 CFR 1.705(b)(2) and the fee required by 37 CFR 1.18(e), the USPTO will issue a certificate of correction reflecting the PTA determination noted above.

Patentee should be aware that in order to preserve the right to review in the United States District Court for the District of Columbia of the USPTO patent term adjustment determination, patentee must ensure that he or she also take the steps required under 35 U.S.C. 154(b)(4)(A) in a timely manner. Nothing in the request for recalculation should be construed as providing an alternative time frame for commencing a civil action under 35 U.S.C. 154(b)(4)(A).

Any questions concerning this decision should be directed to the Office of Patent Legal Administration at 571-272-7702.

UNITED STATES PATENT AND TRADEMARK OFFICE

COMMISSIONER FOR PATENTS
UNITED STATES PATENT AND TRADEMARK OFFICE
P.O. BOX 1450
ALEXANDRIA, VA 22313-1450
WWW.USPTO.GOV

Paper No. None

SCHLUMBERGER OILFIELD SERVICES
200 GILLINGHAM LANE
MD 200-9
SUGAR LAND TX 77478

COPY MAILED
SEP 14 2006
OFFICE OF PETITIONS

In re Application of	:	
Dean M. Homan et al.	:	
Application No. 10/616,710	:	DECISION ON PETITION
Filing Date: July 10, 2003	:	UNDER 37 C.F.R. § 1.137(B)
Attorney Docket No.: 19.0317	:	
Title: ELECTROMAGNETIC LOGGING	:	
TOOL CALIBRATION SYSTEM	:	

This is a decision on the petition under 37 C.F.R §1.137(b)[1], filed June 19, 2006, to revive the above-identified application.

The above-identified application became abandoned for failure to reply in a timely manner to the non-final Office action, mailed May 10, 2005, which set a shortened statutory period for reply of three months. No response was received, and no extensions of time under the provisions of 37 C.F.R. §1.136(a) were requested. Accordingly, the above-identified application became abandoned on August 11, 2005. A notice of abandonment was mailed on December 15, 2005.

---

1 A grantable petition pursuant to 37 CFR 1.137(b) must be accompanied by:
(1) The reply required to the outstanding Office action or notice, unless previously filed;
(2) The petition fee as set forth in § 1.17(m);
(3) A statement that the entire delay in filing the required reply from the due date for the reply until the filing of a grantable petition pursuant to this paragraph was unintentional. The Commissioner may require additional information where there is a question whether the delay was unintentional, and;
(4) Any terminal disclaimer (and fee as set forth in § 1.20(d)) required pursuant to paragraph (d) of this section.

With the present petition, Petitioner has submitted the petition fee, an amendment, and the proper statement of unintentional delay. It is noted that a terminal disclaimer is not necessary.

Petitioner has met all requirements for a grantable petition under 37 C.F.R. §1.137(b). As such, the petition is **GRANTED.**

The Technology Center will be notified of this decision. The Technology Center's support staff will notify the Examiner of this decision, so that the amendment which was received with the present petition can be processed.

Telephone inquiries regarding *this decision* should be directed to the undersigned at (571) 272-3225[2]. All other inquiries concerning examination procedures or status of the application should be directed to the Technology Center.

Paul Shanoski

Paul Shanoski
Senior Attorney
Office of Petitions
United States Patent and Trademark Office

---

2 Petitioner will note that all practice before the Office should be in writing, and the action of the Office will be based exclusively on the written record in the Office. See 37 C.F.R. §1.2. As such, Petitioner is reminded that no telephone discussion may be controlling or considered authority for Petitioner's further action(s).

UNITED STATES PATENT AND TRADEMARK OFFICE

Commissioner for Patents
United States Patent and Trademark Office
P.O. Box 1450
Alexandria, VA 22313-1450
www.uspto.gov

COHEN & GRIGSBY
11 Stanwix Street, 15th Floor
Pittsburgh, PA 15222

COPY MAILED

OCT 1 0 2006

OFFICE OF PETITIONS

In re Application of
ZHANG
Application No. 10/616,711
Filed: July 10, 2003
Attorney Docket No. 03-100

DECISION ON PETITION
TO WITHDRAW
FROM RECORD

This is a decision on the Request to Withdraw as attorney or agent of record under 37 C.F.R. § 1.36(b), filed May 10, 2006.

The request is **NOT APPROVED** as moot.

A review of the file record indicates that the power of attorney to Christine W. Trebilcock has been revoked by the applicant of the patent application on August 28, 2006. Accordingly, the request to withdraw under 37 C.F.R. § 1.36(b) is moot.

All future communications from the Office will continue to be directed to the below-listed address until otherwise notified by applicant.

Telephone inquires concerning this decision should be directed to Monica A. Graves at 571-272-7253.

for David Bucci
Petitions Examiner
Office of Petitions

cc: **Martin G. Belisario**
Akin, Gump, Strauss, Hauer & Feld LLP
2005 Martket Street, Suite 2200
Philadelphia, PA 19103

UNITED STATES PATENT AND TRADEMARK OFFICE

Commissioner for Patents
United States Patent and Trademark Office
P.O. Box 1450
Alexandria, VA 22313-1450
www.uspto.gov

THE WEBB LAW FIRM PC
700 KOPPERS BUILDING
436 SEVENTH AVE
PITTSBURGH PA 15219

COPY MAILED
AUG 24 2006
OFFICE OF PETITIONS

In re Application of	:	
Zandvliet, et al.	:	
Application No. 10/616,742	:	ON PETITION
Filed: July 10, 2003	:	
Attorney Docket No. 702-030799	:	

This is a decision on the petition to revive an abandoned application under 37 CFR 1.137(b), filed February 2, 2006.

The petition under 37 CFR 1.137(b) is **GRANTED**.

The above-identified application became abandoned for failure to timely file a response to the non-final Office action mailed December 10, 2004, which set a shortened statutory period for reply of three (3) months. No extensions of time under 37 CFR 1.136(a) were purchased. Accordingly, no reply having received, the application became abandoned on March 11, 2005. A Notice of Abandonment was mailed on June 20, 2005.

With the instant petition, petitioner paid the petition fee, submitted the required reply in the form of an Amendment, and made the proper statement of unintentional delay.

The matter is being forwarded to Group Art Unit 1731 for consideration of the Amendment filed February 2, 2006.

Telephone inquiries related to this decision should be directed to the undersigned at (571)272-3207.

Cliff Congo
Petitions Attorney
Office of Petitions

UNITED STATES PATENT AND TRADEMARK OFFICE

Commissioner for Patents
United States Patent and Trademark Office
P.O. Box 1450
Alexandria, VA 22313-1450
www.uspto.gov

DEC 28 2005

WOODCOCK WASHBURN LLP
1 LIBERTY PLACE
46TH FLOOR
PHILADELPHIA PA 19103

In re Application of	:
Craig Heacock et al	:
Serial No.: 10/616,776	: PETITION TO MAKE SPECIAL
Filed: July 10, 2003	:
Attorney Docket No.: CEPH-2249/CP241	:

This is in response to the petition filed December 16, 2005, to make the above-identified application special under the provisions of 37 CFR 1.102(d) based on infringement.

Applicant has satisfied the provisions set forth in M.P.E.P. 708.02, II, relating to actual or potential infringement.

Therefor the petition is **GRANTED**.

The application will be forwarded to the examiner for action on the merits commensurate with this decision.

Should there be any questions with regard to this letter please contact William R. Dixon, Jr. by letter addressed to the Director, Technology Center 1600, P.O. Box 1450, Alexandria, VA 22313-1450, or by telephone at 571-272-0519 or by facsimile transmission to the Office general facsimile number 571-273-8300.

William R. Dixon, Jr.
Special Program Examiner
Technology Center 1600

UNITED STATES PATENT AND TRADEMARK OFFICE

UNITED STATES DEPARTMENT OF COMMERCE
United States Patent and Trademark Office
Address: COMMISSIONER FOR PATENTS
P.O. Box 1450
Alexandria, Virginia 22313-1450
www.uspto.gov

APPLICATION NO.	FILING DATE	FIRST NAMED INVENTOR	ATTORNEY DOCKET NO.	CONFIRMATION NO.
10/616,777	07/10/2003	Mark J. Bauckman	Z0030/282820	1998

23370 7590 03/11/2005

JOHN S. PRATT, ESQ
KILPATRICK STOCKTON, LLP
1100 PEACHTREE STREET
ATLANTA, GA 30309

EXAMINER
PRINCE, FRED G

ART UNIT	PAPER NUMBER
1724	

DATE MAILED: 03/11/2005

Please find below and/or attached an Office communication concerning this application or proceeding.

UNITED STATES PATENT AND TRADEMARK OFFICE

COMMISSIONER FOR PATENTS
UNITED STATES PATENT AND TRADEMARK OFFICE
P.O. BOX 1450
ALEXANDRIA, VA 22313-1450
www.uspto.gov

MAR 10 2005

In re Application of BAUCKMAN, MARK J. et. al Serial No. 10/616777 Filed: July 10, 2003 For: AUTOMATIC SWIMMING POOL CLEANERS WITH SHAPED FLOATS AND WATER-TEMPERATURE OR -PRESSURE INDICATORS AND WATER-CIRCULATION SYSTEMS INCORPORATING SUCH INDICATORS	:	NOTICE OF WITHDRAWAL FROM ISSUE UNDER 37 CFR 1.313(b)

The above-identified application is withdrawn from issue after payment of the issue fee due to reopening of prosecution. See 37 CFR 1.313 (b).

The above-identified application is hereby withdrawn from issue.

The issue fee is refundable upon written request. If, however, the application is again found allowable, the issue fee can be applied toward payment of the issue fee in the amount identified on the new Notice of Allowance and Issue Fee Due upon written request. This request and any balance due must be received on or before the due date noted in the new Notice of Allowance in order to prevent abandonment of the application.

Telephone inquiries should be directed to Duane Smith at (571) 272-1166.

The above-identified application is being forwarded to the examiner for prompt appropriate action, including notifying applicant of the new status of this application.

JMStone

Jacqueline Stone, Director
Technology Center 1700
Chemical and Materials Engineering

JOHN S. PRATT, ESQ
KILPATRICK STOCKTON, LLP
1100 PEACHTREE STREET
ATLANTA GA 30309

cc: Allowed Files, Pk3-915

UNITED STATES PATENT AND TRADEMARK OFFICE

Commissioner for Patents
United States Patent and Trademark Office
P.O. Box 1450
Alexandria, VA 22313-1450
www.uspto.gov

JJGJr: 07-06

Paper No: __

HONEYWELL INTERNATIONAL INC.
101 COLUMBIA ROAD
P O BOX 2245
MORRISTOWN NJ 07962-2245

COPY MAILED
JUL 1 0 2006
OFFICE OF PETITIONS

In re Application of	:	
Gobson, et al.	:	
Application No. 10/616,796	:	DECISION
Filed: 10 July, 2003	:	
Attorney Docket No.: H0004400	:	

This is a decision on the petition, filed 25 November, 2005, to revive the instant nonprovisional application under the provisions of 37 C.F.R. §1.137(f).

NOTES:

It appears that, since the filing of the instant petition, Petitioner has not inquired as to the Status of the instant matter–Petitioner is reminded that the filing of such inquiries at a minimum of three- (3-) month intervals may provide a showing of diligence should the extended delay be questioned (for example, as required under 37 C.F.R. §1.181).

Monitoring of the status of applications on Private PAIR can inform one's management of application responses and provide an indication when mailings of Office actions should be expected.

Petitioner does not appear to be Counsel of Record or otherwise empowered to prosecute the instant application. In this connection, Petitioner must file of record the appropriate revocation/power of attorney.

Moreover, the correspondence address of record are different than that shown on the papers submitted herein.

However, Petitioner has submitted no formal change(s) in this regard.

If Petitioner desires to receive future correspondence regarding this application, the appropriate Notice of Change of Address (for correspondence) and Fee Address must be submitted.

A courtesy copy of this decision will be mailed to Petitioner. However, all future correspondence will be directed to the address of record until such time as appropriate instructions are received to the contrary.

The petition is **GRANTED**.

Petitioner states that the instant nonprovisional application is the subject of an application filed in a foreign country or otherwise requiring publication on 9 July, 2004. Moreover, Petitioner submitted the instant petition (with recision request) 25 November, 2005, upon learning of the error.

Thus, Petitioner alleges unintentional failure to notify the U.S. Patent and Trademark Office of this filing of the subject application in a foreign country within 45 days of that filing.

In view of the above, this application became abandoned pursuant to 35 U.S.C. §122(b)(2)(B)(iii) and 37 C.F.R. §1.213(c) for failure to timely notify the Office of the filing of an application in a foreign country, or under a multilateral international agreement, that requires publication of applications 18 months after filing.

A petition under 37 C.F.R. §1.137(f) must be accompanied by:

> (1) the reply--which is met by the notification of such filing in a foreign country or under a multinational treaty;
>
> (2) the petition fee as set forth in 37 C.F.R. §1.17(m); and
>
> (3) a statement that the entire delay in filing the required reply from the due date of the reply until the filing of a grantable petition was unintentional.

The instant petition has been found to be in compliance with 37 C.F.R. §1.137(f). Accordingly, the failure to timely notify the Office of a foreign or international filing within 45 days after the date of filing of such foreign or international application as provided by 35 U.S.C. §122(b)(2)(B)(iii) and 37 C.F.R. §1.213(c) is accepted as having been unintentionally delayed.

The previous Request and Certification under 35 U.S.C. §122(b)(2)(B)(I) has been rescinded. A Notice Regarding Rescission of Nonpublication Request, which sets forth the projected publication date of ***12 October, 2006***, accompanies this decision.

This application is being released to Technology Center 2600 for further processing in due course.

Inquiries concerning this decision may be directed to the undersigned at (571) 272-3214.

John J. Gillon, Jr.
Senior Attorney
Office of Petitions

ATTACHMENT: Notice Regarding Rescission of Nonpublication Request

CC:
MARK C. YOUNG
STINSON MORRISON HECKER LLP
1201 WALNUT/STE. 2800
KANSAS CITY, MO 64106-8600

UNITED STATES PATENT AND TRADEMARK OFFICE

COMMISSIONER FOR PATENTS
UNITED STATES PATENT AND TRADEMARK OFFICE
P.O. BOX 1450
ALEXANDRIA, VA 22313-1450
www.uspto.gov

JJGJr: 09-04

Paper No: __

KENYON & KENYON
SUITE 600
333 W. SAN CARLOS, STREET
SAN JOSE CA 95110-2711

COPY MAILED

SEP 17 2004

OFFICE OF PETITIONS

In re Application of
Zalewski, et al.
Application No. 10/616,819
Filed: 8 July, 2003
Attorney Docket No. 12745/2

: DECISION ON PETITION

This is a decision on the petition, filed 30 August, 2004, to revive the instant nonprovisional application under the provisions of 37 C.F.R. §1.137(f).

The petition is **GRANTED**.

Petitioner states that the instant nonprovisional application is the subject of an application filed in a foreign country on 1 July, 2004.

Thus, Petitioner alleges having unintentionally failed to notify the U.S. Patent and Trademark Office of this filing of the subject application in a foreign country within 45 days of that filing.

In view of the above, this application became abandoned pursuant to 35 U.S.C. §122(b)(2)(B)(iii) and 37 C.F.R. §1.213(c) for failure to timely notify the Office of the filing of an application in a foreign country, or under a multilateral international agreement, that requires publication of applications 18 months after filing.

A petition under 37 C.F.R. §1.137(f) must be accompanied by:

(1) the reply--which is met by the notification of such filing in a foreign country or under a multinational treaty;

(2) the petition fee as set forth in 37 C.F.R. §1.17(m); and

(3) a statement that the entire delay in filing the required reply from the due

date of the reply until the filing of a grantable petition was unintentional.

The instant petition has been found to be in compliance with 37 C.F.R. §1.137(f). Accordingly, the failure to timely notify the Office of a foreign or international filing within 45 days after the date of filing of such foreign or international application as provided by 35 U.S.C. §122(b)(2)(B)(iii) and 37 C.F.R. §1.213(c) is accepted as having been unintentionally delayed.

The previous Request and Certification under 35 U.S.C. §122(b)(2)(B)(I) has been rescinded. A Notice Regarding Rescission of Nonpublication Request (Corrected Filing Receipt), which sets forth the projected publication date of 13 January, 2005, accompanies this decision.

This application is being released to Technology Center 3600 for further processing in due course.

Inquiries concerning this decision may be directed to the undersigned at (703) 305-9199.

John J. Gillon, Jr.
Senior Attorney
Office of Petitions

ATTACHMENT: Notice Regarding Rescission of Nonpublication Request

UNITED STATES PATENT AND TRADEMARK OFFICE

COMMISSIONER FOR PATENTS
UNITED STATES PATENT AND TRADEMARK OFFICE
P.O. BOX 1450
ALEXANDRIA, VA 22313-1450
www.uspto.gov

COPY MAILED

JUL 12 2007

OFFICE OF PETITIONS

STROOCK & STROOCK & LAVAN LLP
180 MAIDEN LANE
NEW YORK, NY 10038

In re Application of :
Robert C. Greczanik, et al. :
Application No. 10/616,825 : ON PETITION
Filed: July 10, 2003 :
Attorney Docket No. 000817/0002 :

This is a decision in response to the petition, filed February 14, 2007, to revive the above-identified application under the provisions of 37 CFR 1.137(b).

The petition is **GRANTED**.

The above-identified application became abandoned for failure to reply in a timely manner to the non-final Office action mailed January 25, 2006, which set a shortened statutory period for reply of one (1) month or thirty (30) days (whichever is later). No extension of time under the provisions of 37 CFR 1.136(a) was obtained. A Notice of Abandonment was mailed on September 13, 2006. In response, on February 14, 2007, the present petition was filed.

The petition satisfies the requirements of 37 CFR 1.137(b) in that petitioner has supplied (1) the response in the form of an election of the invention to be examined; (2) the petition fee of $1,500; and (3) an adequate statement of unintentional delay[1].

Telephone inquiries concerning this decision may be directed to the undersigned at (571) 272-3204. All other inquiries regarding this application should be directed to the Technology Center.

The application is being referred to Technology Center AU 3725 for consideration of the response filed February 14, 2007.

Sherry D. Brinkley
Petitions Examiner
Office of Petitions

[1] 37 CFR 1.137(b)(3) requires a statement that the entire delay in filing the required reply from the due date for the reply until the filing of a grantable petition pursuant to 37 CFR 1.137(b) was unintentional. While it is not apparent whether the person signing the statement of unintentional delay was in a position to have firsthand or direct knowledge of the facts and circumstances of the delay at issue, such statement is being treated as having been made as the result of a reasonable inquiry into the facts and circumstances of such delay. See 37 CFR 10.18(b) and Changes to Patent Practice and Procedure; Final Rule Notice, 62 Fed. Reg. 53131, 53178 (October 10, 1997), 1203 Off. Gaz. Pat. Office 63, 103 (October 21, 1997). In the event that such an inquiry has not been made, petitioner must make such an inquiry. If such inquiry results in the discovery that it is not correct that the entire delay in filing the required reply from the due date for the reply until the filing of a grantable petition pursuant to 37 CFR 1.137(b) was unintentional, petitioner must notify the Office.

UNITED STATES PATENT AND TRADEMARK OFFICE

Commissioner for Patents
United States Patent and Trademark Office
P.O. Box 1450
Alexandria, VA 22313-1450
www.uspto.gov

HONEYWELL INTERNATIONAL INC.
101 COLUMBIA ROAD
P.O. BOX 2245
MORRISTOWN NJ 07962-2245

COPY MAILED

MAR 1 8 2005

OFFICE OF PETITIONS

In re Application of :
Hisham M. Qureshi :
Application No. 10/616,836 :
Filed: July 9, 2003 :
Attorney Docket No. H0003738 :

ON PETITION

This is a decision on the petition, filed March 17, 2003, under 37 CFR 1.313(c)(2) to withdraw the above-identified application from issue after payment of the issue fee.

The petition is **GRANTED**.

The above-identified application is withdrawn from issue for consideration of a submission under 37 CFR 1.114 (request for continued examination). See 37 CFR 1.313(c)(2).

Petitioner is advised that the issue fee paid on March 4, 2005 in the above-identified application cannot be refunded. If, however, the above-identified application is again allowed, petitioner may request that it be applied towards the issue fee required by the new Notice of Allowance.[1]

There is no indication that the person signing the instant petition was ever given a power of attorney or authorization of agent to prosecute the above-identified application. If the person signing the instant petition desires to receive future correspondence regarding this application, the appropriate power of attorney or authorization of agent must be submitted. While a courtesy copy of this decision is being mailed to the person signing the instant petition, all future correspondence will be directed to the address currently of record until such time as appropriate instructions are received to the contrary.

Telephone inquiries should be directed to the undersigned at (571) 272-3208.

---

[1] The request to apply the issue fee to the new Notice may be satisfied by completing and returning the new Issue Fee Transmittal Form PTOL-85(b), which includes the following language thereon: "Commissioner for Patents is requested to apply the Issue Fee and Publication Fee (if any) or re-apply any previously paid issue fee to the application identified above." Petitioner is advised that, whether a fee is indicated as being due or not, the Issue Fee Transmittal Form **must** be completed and timely submitted to avoid abandonment. Note the language in bold text on the first page of the Notice of Allowance and Fee(s) Due (PTOL-85).

The examiner of Technology Center AU 3661 will consider the request for continued examination under 37 CFR 1.114.

Karen Creasy

Karen Creasy
Petitions Examiner
Office of Petitions
Office of the Deputy Commissioner
for Patent Examination Policy

cc:
INGRASSIA FISHER & LORENZ, P.C.
7150 E. CAMELBACK, SUITE 325
SCOTTSDALE ARIZONA 85251

UNITED STATES PATENT AND TRADEMARK OFFICE

COMMISSIONER FOR PATENTS
UNITED STATES PATENT AND TRADEMARK OFFICE
P.O. BOX 1450
ALEXANDRIA, VA 22313-1450
www.uspto.gov

George J. Miao
2 Inverness Drive
Marlboro NJ 07746

COPY MAILED

JAN 2 0 2004

OFFICE OF PETITIONS

In re Application of
Miao
Application No. 10/616,840
Filed: July 10, 2003
Attorney Docket No. N/A
For: DUAL-MODE TRANSCEIVER FOR INDOOR AND OUTDOOR ULTRA WIDEBAND COMMUNICATIONS

DECISION ON PETITION

This is a decision on the petition, filed October 29, 2003 (certificate of mailing date October 27, 2003), requesting that Figure 30 be accorded a filing date of July 10, 2003. The petition will be treated under 37 CFR 1.53(e).

The application was filed on July 10, 2003. On October 14, 2003, the Office of Initial Patent Examination mailed a "Notice of Omitted Items in a Nonprovisional Application" informing petitioner that Figure 30, as described in the specification, appeared to have been omitted.

Petitioner requests that Figure 30 be accorded a filing date of July 10, 2003 on the basis that 30 sheets of drawing figures, including Figure 30, were received in the Patent and Trademark Office (PTO) on July 10, 2003. In support, the instant petition is accompanied by a copy of applicant's itemized postcard receipt showing an Office of Initial Patent Examination generated barcode citing July 10, 2003 as the date of receipt. The postcard lists, *inter alia*, that the filing included 30 sheets of drawings.

The return postcard constitutes *prima facie* evidence that 30 sheets of drawing figures were filed on July 10, 2003. MPEP 503. A review of the application file reveals that there are 29 sheets of drawing figures depicting Figures 1 - 29 present.

Accordingly, the petition under 37 CFR 1.53(e) is **GRANTED**.

Pursuant to petitioner's request, the $130.00 petition fee submitted with the instant petition will be refunded by way of treasury check that will be scheduled shortly.

The application is being returned to Office of Initial Patent Examination for further processing, with a filing date of **July 10, 2003**, using the copy of Figure 30 submitted with the instant petition. Office records will be corrected to show that 30 sheets of drawings were present on filing.

Any inquiries pertaining to this matter may be directed to the undersigned at (703) 308-6712.

E. Shirene Willis

E. Shirene Willis
Senior Petitions Attorney
Office of Petitions

UNITED STATES PATENT AND TRADEMARK OFFICE

COMMISSIONER FOR PATENTS
UNITED STATES PATENT AND TRADEMARK OFFICE
P.O. BOX 1450
ALEXANDRIA, VA 22313-1450
www.uspto.gov

OIPE JC115 FEB 11 2004

George J. Miao
2 Inverness Drive
Marlboro NJ 07746

COPY MAILED

JAN 20 2004

OFFICE OF PETITIONS

In re Application of
Miao
Application No. 10/616,840
Filed: July 10, 2003
Attorney Docket No. N/A
For: DUAL-MODE TRANSCEIVER FOR INDOOR AND OUTDOOR ULTRA WIDEBAND COMMUNICATIONS

DECISION ON PETITION

This is a decision on the petition, filed October 29, 2003 (certificate of mailing date October 27, 2003), requesting that Figure 30 be accorded a filing date of July 10, 2003. The petition will be treated under 37 CFR 1.53(e).

The application was filed on July 10, 2003. On October 14, 2003, the Office of Initial Patent Examination mailed a "Notice of Omitted Items in a Nonprovisional Application" informing petitioner that Figure 30, as described in the specification, appeared to have been omitted.

Petitioner requests that Figure 30 be accorded a filing date of July 10, 2003 on the basis that 30 sheets of drawing figures, including Figure 30, were received in the Patent and Trademark Office (PTO) on July 10, 2003. In support, the instant petition is accompanied by a copy of applicant's itemized postcard receipt showing an Office of Initial Patent Examination generated barcode citing July 10, 2003 as the date of receipt. The postcard lists, *inter alia*, that the filing included 30 sheets of drawings.

The return postcard constitutes *prima facie* evidence that 30 sheets of drawing figures were filed on July 10, 2003. MPEP 503. A review of the application file reveals that there are 29 sheets of drawing figures depicting Figures 1 - 29 present.

Accordingly, the petition under 37 CFR 1.53(e) is **GRANTED**.

Pursuant to petitioner's request, the $130.00 petition fee submitted with the instant petition will be refunded by way of treasury check that will be scheduled shortly.

The application is being returned to Office of Initial Patent Examination for further processing, with a filing date of **July 10, 2003**, using the copy of Figure 30 submitted with the instant petition. Office records will be corrected to show that 30 sheets of drawings were present on filing.

Any inquiries pertaining to this matter may be directed to the undersigned at (703) 308-6712.

E. Shirene Willis

E. Shirene Willis
Senior Petitions Attorney
Office of Petitions

UNITED STATES PATENT AND TRADEMARK OFFICE

Commissioner for Patents
United States Patent and Trademark Office
P.O. Box 1450
Alexandria, VA 22313-1450
www.uspto.gov

FISH & RICHARDSON, PC
12390 EL CAMINO REAL
SAN DIEGO, CA 92130-2081

COPY MAILED

MAY 1 2 2006

OFFICE OF PETITIONS

In re Application of :
Gulati, Sandeep :
Application No. 10/616,869 :
Filed: July 9, 2003 :
Attorney Docket No. VIALO-24 :

ON PETITION

This is a decision on the petition under 37 CFR 1.102(d), to make the above-identified application special based on applicants who are small entities filing biotechnology applications as set forth in M.P.E.P. § 708.02, Section XII and the petition under 37 CFR 1.102(d) to make the above-identified application special based on developing treatments and cures for HIV/AIDS or cancer as set forth in M.P.E.P. § 708.02, Section X, filed on July 9, 2003 and resubmitted on March 3, 2004

The petition under 37 CFR 1.102(d), Section XII, is **DISMISSED**.

A grantable petition to make an application special under 37 CFR 1.102(d) and MPEP § 708.02, Section XII: Special Status for Applications Relating to Biotechnology Filed by Applicants Who are Small Entities, must be accompanied by (1) the petition fee under 37 CFR 1.17(h); and (2) state:

> (A) That small entity status has been established or include a statement establishing small entity status;
>
> (B) That the subject of the patent application is a major asset of the small entity; and
>
> (C) That the development of the technology will be significantly impaired if examination of the patent application is delayed, including an explanation of the basis for making the statement.

The instant petition fails to meet the requirements set forth above for special status because it lacks requirements (A) and (C). First, the invention in not an application related to biotechnology, rather the invention is a signal processing device that detects a certain event within an arrayed signal pattern. While some claims address the arrayed pattern is generated from different types of microarrays (e.g., claim 8), biotechnology includes techniques using organism and their components to make products, modify plants and animals to carry desired traits, or develop micro-organisms for specific uses. The current invention does not fall within this definition. Additionally, while the petition states that making this application special "will greatly increase the likelihood that ViaLogy will be able to remain in operation and to produce products based on this technology" and "will increase the likelihood that ViaLogy being able to raise costly research and development funds necessary for exploiting this technology," these

statements do not show that the development of the technology will be significantly impaired if examination of the patent application is delayed.

The petition under 37 CFR 1.102(d), Section X, is **DISMISSED**.

A grantable petition to make an application special under 37 CFR 1.102(d) and MPEP § 708.02, Section X: Inventions Relating to HIV/AIDS or cancer, must be accompanied by (1) the petition fee under 37 CFR 1.17(h); and (2) a satisfactory statement explaining how the invention contributes to the diagnosis, treatment or prevention of HIV/AIDS or cancer.

The petition states that the invention includes "a technique for analyzing arrays which are widely utilized for diagnosis of and creation of drugs of [HIV/AIDS and cancer] ... Earlier disclosure of the advances herein will have a beneficial effect on (i) detecting the presence of hybridization events which *may* be indicators of drug feasibility and/or effectiveness of a therapy; and (ii) treatment through pharmaceuticals, of HIV/AIDS and cancer" (emphasis added). This explanation does not show enough connection between the claimed signal processing invention and an invention related to HIV/AIDS and cancer. As understood, the invention and the potential or possible applications of the invention in contributing the diagnosis of the treatment of HIV/AIDS and cancer are too remote.

Further correspondence with respect to this matter should be addressed as follows:

By Mail: Mail Stop PETITION
Commissioner for Patents
P. O. Box 1450
Alexandria, VA 22313-1450

By hand: U. S. Patent and Trademark Office
Customer Service Window, Mail Stop Petitions
Randolph Building
401 Dulany Street
Alexandria, VA 22314

By FAX: (571) 273-8300

Telephone inquiries concerning this decision should be directed to Petitions Examiner Liana Chase at 571-272-3206.

All other inquiries concerning either the examination or status of the application should be directed to the Technology Center.

Dani Potter for

David Bucci
Petitions Examiner
Office of Petitions

UNITED STATES PATENT AND TRADEMARK OFFICE

Commissioner for Patents
United States Patent and Trademark Office
P.O. Box 1450
Alexandria, VA 22313-1450
www.uspto.gov

Date : March 6, 2009

Patent No. :7096566
Inventor(s) :Hung T. Du et al.
Issued :August 29, 2006
Title :METHOD FOR MAKING AN ENCAPSULTATED COIL STRUCTURE

Re: Request for Certificate of Correction

Consideration has been given your request for the issuance of a certificate of correction for the above-identified patent under the provisions of Rules 1.322 and 1.323.

With respect to applicants request in deleting named inventors; the inventors are printed in accordance with the Declaration submitted at the time of filing the application. Therefore, no correction is in order here under Rules 1.322 or 1.323.

In view of the foregoing, your request is hereby denied.

However, your attention is directed to C.F.R. 1.324, wherein a request is being made to add or delete inventor(s), after issuance of the patent.

Mary Diggs, Supervisor
Decisions & Certificates
of Correction Branch
(703) 308-9390 or (703) 308- 9390 Ext. 122

Christopher M. Brock
Harness, Dickey, & Pierce, PLC
P.O. Box 828
Bloomfield Hills, MI 48303

/arg

UNITED STATES PATENT AND TRADEMARK OFFICE

Commissioner for Patents
United States Patent and Trademark Office
P.O. Box 1450
Alexandria, VA 22313-1450
www.uspto.gov

HARNESS, DICKEY & PIERCE, P.L.C.
P.O. BOX 828
BLOOMFIELD HILLS MI 48303

MAILED

JUL 16 2010

OFFICE OF PETITIONS

In re Patent No: 7,096,566 :
Issue Date : August 29, 2006 :
Application No. 10/616,871 : ON PETITION
Filed: July 10, 2003 :
Patentee: DU et al. :

This is a decision on the petition under 37 CFR 1.181(a)(3), filed May 27, 2009, seeking the USPTO to reconsider the denial of a Request to Issue a Certificate of Correction (USPTO mistake) decided on March 6, 2009.

The petition is **GRANTED**.

Petitioner has shown that the Office erred in failing to delete Brandon L. Vebrugge, Joshua F. West, Michael R. Sell, David J. Smith, Earl M. Ortt, and Howard T. White as inventors in the above-identified application as a petition under 37 CFR 1.48(b), filed June 30, 2006, was improperly dismissed in the decision of July 27, 2006. Additionally, the request for reconsideration of the dismissal of the petition under 37 CFR 1.48(b) was never treated.

The instant file is being forwarded to Certificate of Corrections Branch for issuance of the Certificate of Correction, filed February 9, 2009, to now indicate that

Brandon L. Verbugge, Towson, MD (US)
Joshua F. West, Towson, MD (US)
Michael R. Sell, Bel air, MD (US)
David J. Smith, Glen Burnie, MD (US)
Earl M. Ortt, Bel Air, MD (US)
Howard T. White, Wittman, MD (US)

have been deleted as inventors.

As the error in the patent is not the fault of petitioner, no fees for the requested Certificate of Correction have been assessed.

Telephone inquiries concerning this decision should be directed to the undersigned at (571) 272-7099.

This application file is being forwarded to Certificate of Corrections branch.

David Bucci
Petitions Examiner
Office of Petitions

UNITED STATES PATENT AND TRADEMARK OFFICE

Commissioner for Patents
United States Patent and Trademark Office
P.O. Box 1450
Alexandria, VA 22313-1450
www.uspto.gov

CONNOLLY BOVE LODGE & HUTZ LLP
1875 EYE STREET, N.W.
SUITE 1100
WASHINGTON DC 20036

COPY MAILED

JUL 23 2008

OFFICE OF PETITIONS

In re Application of	:	
Rath, Kamlesh	:	
Application No. 10/616,882	:	ON PETITION
Filed: July 9, 2003	:	
Attorney Docket No. 27592-00912-US	:	

This is a decision on the petition under 37 C.F.R. § 1.137(b), filed July 3, 2008, to revive the above-identified application.

The petition is **GRANTED**.

The petition satisfies the requirements of 37 CFR 1.137(b) in that petitioner has supplied (1) the reply in the form of an Amendment, (2) the petition fee, and (3) a proper statement of unintentional delay.

Telephone inquiries concerning this decision should be directed to the undersigned at (571) 272-3206.

This matter is being referred to Technology Center 2617 for further examination on the merits.

Liana Walsh
Petitions Examiner
Office of Petitions

UNITED STATES PATENT AND TRADEMARK OFFICE

SEP 14 2004

Commissioner for Patents
United States Patent and Trademark Office
P.O. Box 1450
Alexandria, VA 22313-1450
www.uspto.gov

In re Application of	:	
Peter G. Aylward *et al*	:	
Application No. 10/616,891	:	DECISION ON PETITION
Filed: July 9, 2003	:	
Attorney Docket No. SWS-002 US	:	

This is a decision on the petition to make special filed on October 16, 2003. The petition is based upon the practice described in MPEP § 708.02(V) "Environmental Quality." Therefore, no petition fee is required.

The petition is granted.

The petition to make special based upon the practice in the above mentioned MPEP section is deemed to satisfy all of the requirements thereof. Accordingly, the examiner will treat this application as special throughout its prosecution. Prior to the first action on the merits, the examiner will conduct a rigorous search for potentially interfering applications. The interference search will be brought up to date prior to each successive action.

The Supervisory Patent Examiner of Patent Examining Art Unit 3753 is being informed of this decision, and will advise the examiner to take future action consistent therewith.

PETITION GRANTED.

Stephen Marcus, Special Program Examiner
Technology Center 3700

CLIFFORD B. PERRY
449 SANTA FE DR.
#312
ENCINITAS, CA 92024

UNITED STATES PATENT AND TRADEMARK OFFICE

Commissioner for Patents
United States Patent and Trademark Office
P.O. Box 1450
Alexandria, VA 22313-1450
www.uspto.gov

CLIFFORD B. PERRY
449 SANTA FE DR.
#312
ENCINITAS, CA 92024

COPY MAILED

NOV 2 2 2004

OFFICE OF PETITIONS

In re Application of	:	
Peter G. Aylward	:	
Application No. 10/616,891	:	ON PETITION
Filed: July 9, 2003	:	
Attorney Docket No. SWS-002 US	:	

This is a decision on the petition filed by facsimile transmission on November 15, 2004, to correct the assignment data on Form PTOL-85(b).

The petition is **granted**.

The requested data will be printed on the patent if this can be accomplished without substantial disruption to the issue process. However, if the printing of the patent has progressed to the point where the requested data cannot be included in the printed patent, petitioner can request a Certificate of Correction under 37 CFR 1.322.

The application is being forwarded to the Publishing Division to be processed into a patent.

Andrea Smith
Petitions Examiner
Office of Petitions
Office of the Deputy Commissioner
for Patent Examination Policy

UNITED STATES PATENT AND TRADEMARK OFFICE

COMMISSIONER FOR PATENTS
UNITED STATES PATENT AND TRADEMARK OFFICE
P.O. BOX 1450
ALEXANDRIA, VA 22313-1450
WWW.USPTO.GOV

Paper No. None

KELLY BAUERSFELD LOWRY & KELLEY, LLP
6320 CANOGA AVENUE
SUITE 1650
WOODLAND HILLS CA 91367

COPY MAILED

FEB 03 2004

OFFICE OF PETITIONS

In re Application of	:	
Sam M. Chaoui, Walter W. Mosher, and	:	
Mark M. Kotik	:	
Application No. 10/616,892	:	DECISION ON PETITION
Filed: July 9, 2003	:	
Attorney Docket No. PREDYN-43255	:	
Title: AUTOMATIC BLOOD ANALYSIS	:	
AND IDENTIFICATION SYSTEM	:	

This is in response to the petition under 37 C.F.R. §1.47(a)[1], filed December 1, 2003.

On July 9, 2003, the application was deposited, identifying Sam M. Chaoui, Walter W. Mosher, and Mark M. Kotik as joint inventors. The application was deposited without an executed oath or declaration. On October 6, 2003, applicant was mailed a "Notice to File Missing Parts of Nonprovisional Application - Filing Date Granted" (Notice), requiring an executed oath or declaration in compliance with 37 C.F.R. §1.63, a surcharge for its late filing, the basic filing fee, and additional claim fees. This Notice set a two-month period for reply.

---

[1]A grantable petition under 37 C.F.R. §1.47(a) requires:

(1) the petition fee of $130;
(2) a surcharge of either $65 or $130 if the petition is not filed at the time of filing the application, as set forth in 37 CFR § 1.16(e);
(3) a statement of the last known address of the non-signing inventors;
(4) either
  a) proof that a copy of the entire application (specification, claims, drawings, and the oath or declaration) was sent or given to the non-signing inventor for review and proof that the non-signing inventor refuses to join in the application or
  b) proof that the non-signing inventor cannot be found or reached after diligent effort;
(5) a declaration which complies with 37 CFR §1.63.

On December 1, 2002, petitioner submitted a declaration executed by the later two listed joint inventors, a surcharge for its late filing, the basic filing fee, and additional claim fees. Petitioner has also submitted the last known address of the non-signing inventor, as well as a statement of one having firsthand knowledge that a complete copy of the application was sent to the last known address of the non-signing inventor. It is further established that the non-signing inventor orally refused to execute the declaration.

The petition is **GRANTED**.

The above-identified application and papers have been reviewed and found in compliance with 37 CFR 1.47(a). This application is hereby accorded Rule 1.47(a) status.

As provided in Rule 1.47(a), this Office will forward notice of this application's filing to the non-signing inventors at the addresses given in the petition. Notice of the filing of this application will also be published in the Official Gazette.

After this decision is mailed, the application will be returned to the Office of Initial Patent Examination (OIPE) for completion of pre-examination processing.

Telephone inquiries concerning *this decision* should be directed to the undersigned at (703) 305-0011. Questions pertaining to this application should be directed towards the Office of Initial Patent Examination at (703)-308-1202.

Paul Shanoski
Attorney
Office of Petitions
United States Patent and Trademark Office

UNITED STATES PATENT AND TRADEMARK OFFICE

COMMISSIONER FOR PATENTS
UNITED STATES PATENT AND TRADEMARK OFFICE
P.O. BOX 1450
ALEXANDRIA, VA 22313-1450
www.uspto.gov

JUL -2 2004

In re Application of	:	
Eckhard H. Kuesters	:	
Serial No. 10/616,905	:	DECISION ON PETITION
Filed: July 11, 2003	:	TO MAKE SPECIAL
For: GOLF BALL INCLUDING AN ELECTROMAGNETIC TRANSMITTER	:	

Applicant's petition, filed July 11, 2003, seeks to have this application made special pursuant to the Accelerated Examination Program. The petition is GRANTED.

The petition has been reviewed and is found to be in compliance with the requirements for special status as set forth in Section 708.02(VIII) of the Manual of Patent Examining Procedures (MPEP).

Applicant is advised that the examiner's search will be restricted to the subject matter encompassed by the claims. In the event that the application receives a first action rejection, applicant is encouraged to arrange for an interview with the examiner, and to provide the examiner with a working copy of any proposed amendment one working day prior to the interview. Any amendment filed in response to a first action rejection which would require broadening of the field of search will be treated as an improper response.

PETITION GRANTED.

E. Rollins-Cross, Director
Technology Center 3700

Oblon, Spivak, McClelland, Maier & Neustadt
1940 Duke Street
Alexandria, VA 22314

UNITED STATES PATENT AND TRADEMARK OFFICE

Commissioner for Patents
United States Patent and Trademark Office
P.O. Box 1450
Alexandria, VA 22313-1450
www.uspto.gov

Patent No. : 7,229,570 B2
Ser. No. : 10/616,914
Inventor(s) : Taiji et al.
Issued : Jun. 12, 2007
Title : SLURRY FOR CHEMICAL MECHANICAL POLISHING
Docket No. : 8017-1094

Re: Request for Certificate of Correction

Consideration has been given your request for the issuance of a certificate of correction for the above-identified patent under the provisions of Rule(s) 1.322 and/or 1.323.

Assignees' names and addresses (assignment data) printed in a patent, are based *solely* on information supplied in the appropriate space for identifying the assignment data, i.e., item 3 of the Issue Fee Transmittal Form PTOL-85B. Granting of a request under 37 CFR 3.81(b) is required to correct applicant's error providing ***incorrect or erroneous*** assignment data, *before* issuance of a Certificate of Correction, under 37 CFR 1.323 *(see Manual of Patent Examining Procedures (M.P.E.P) Chp.1400, sect. 1481).* This procedure is required *at any time after the issue fee is paid*, including after issuance of the patent.

In view of the foregoing, your request, in this mater, is hereby denied.

A request to correct the Assignee under 37 CFR 3.81(b) should include:

A. **the processing fee set forth in 37 CFR 1.117(h) (currently $130);**
B. a statement that the failure to include the correct assignee name on the PTOL-85B was inadvertent; and
C. a copy of the Notice of Recordation of Assignment Document, reflecting the reel and frame number where the assignment(s) is recorded and/or reflecting proof of *the date* the assignment was submitted for recordation.

In the Request, Applicant(s) may request that the file be forwarded to Certificates of Correction Branch, for issuance of a Certificate of Correction, if the Request is granted.

Any request under 37 CFR 3.81(b) should be directed to the following address or facsimile number:

By mail: Mail Stop PETITIONS
Commissioner for Patents
Post Office Box 1450
Alexandria, VA 22313-1450

By hand: Customer Service Window
Mail Stop Petitions
Randolph Building
401 Dulany Street
Alexandria, VA 22314

By fax: (571) 273-0025
ATTN: Office of Petitions

If a fee (currently $100) was previously submitted for consideration of a Request for Certificate of Correction, under CFR 1.323, to correct assignment data, , no additional fee is required.

Ennis Young
For Mary Diggs
Decisions & Certificates
of Correction Branch
(703) **756-1542** or (703) 756-1814

UNITED STATES PATENT AND TRADEMARK OFFICE

Commissioner for Patents
United States Patent and Trademark Office
P.O. Box 1450
Alexandria, VA 22313-1450
www.uspto.gov

COPY MAILED

AUG 03 2009

OFFICE OF PETITIONS

YOUNG & THOMPSON
209 MADISON STREET
SUITE 500
ALEXANDRIA, VA 22314

In re Patent No. 7,229,570	:	
Issue Date: June 12, 2007	:	
Application No. 10/616,914	:	ON PETITION
Filed: July 11, 2003	:	
Attorney Docket No. 8017-1094	:	

This is a decision on the petition filed June 11, 2009, under 37 CFR 3.81(b)[1] to add the assignee's name on the front page of the above-identified patent by way of a Certificate of Correction.

The petition is **granted.**

Telephone inquiries concerning this matter may be directed to the undersigned at (571) 272-3210. Any questions concerning the issuance of the Certificate of Correction should be directed to the Certificates of Correction Branch at (703) 305-8309.

This application is being forwarded to the Certificates of Correction Branch for issuance of the requested Certificate of Correction.

Irvin Dingle
Petitions Examiner
Office of Petitions

[1] See Official Gazette of June 22, 2004

PETITIONS
8017-1094

IN THE U.S. PATENT AND TRADEMARK OFFICE

In re application of

Toshiji TAIJI et al.

U.S. Patent No. 7,229,570

Issued June 12, 2007

SLURRY FOR CHEMICAL MECHANICAL POLISHING

PETITION UNDER 37 CFR §3.81(b) TO IDENTIFY ASSIGNEE ON PATENT

Assistant Commissioner for Patents
P.O. Box 1450
Alexandria, VA 22313-1450

June 11, 2009

Sir:

In accordance with 37 CFR §3.81(b), the owner of the above-identified patent requests that such patent be corrected to state the name of the assignee as recorded prior to the date of issuance.

The assignment vesting ownership rights in: NEC Electronics Corporation, Kanagawa (JP), and Tokyo Magnetic Printing Co., Ltd., Tokyo (JP) was submitted for recordation as set forth in 37 CFR §3.11 on July 11, 2003, prior to the issue date of June 12, 2007. Such assignment is recorded at reel/frame 014278/0059.

Adjustment date: 08/03/2009 CKHLUK
06/12/2009 INTEFSW 00003872 10616914
01 FC:1464 -130.00 OP

The required processing 37 CFR 117(h) processing fee of $130 is paid on even date by credit card.

Adjustment date: 08/03/2009 CKHLUK
05/28/2009 INTEFSW 00003966 10616914
01 FC:1811 -100.00 OP
08/03/2009 CKHLUK 00000007 7229570
01 FC:1464 130.00 OP
02 FC:1811 100.00 OP

Contingent upon grant of the present Petition, Patent Owner respectfully requests that the attached Request for Certificate of Correction and Form PTO/SB/44 be forwarded for consideration.

The Commissioner is hereby authorized in this, concurrent, and future submissions, to charge any deficiency or credit any overpayment to Deposit Account No. 25-0120 for any additional fees required under 37 C.F.R. §§ 1.16, 1.17, or 1.20.

Respectfully submitted,

YOUNG & THOMPSON

/Eric Jensen/

Eric Jensen, Reg. No. 37,855
Customer No. 00466
209 Madison Street, Suite 500
Alexandria, VA 22314
Telephone (703) 521-2297
Telefax (703) 685-0573
(703) 979-4709

EJ/jlw

SPE RESPONSE FOR CERTIFICATE OF CORRECTION

Paper No.: _____

DATE : Aug. 5 2008

TO SPE OF : ART UNIT 3736

SUBJECT : Request for Certificate of Correction for Appl. No 10/616925 patent no7083568

Please respond to this request for a certificate of correction within 7 days.

Please review the requested changes/corrections as shown in the **COCIN** document(s) in the IFW application image. No new matter should be introduced, nor should the scope or meaning of the claims be changed.

Please complete the response (see below) and forward the completed response to scanning using document code COCX

Magdalene Talley

_____

Certificates of Correction Branch

703-308-9390 ext. 116

Thank You For Your Assistance

The request for issuing the above-identified correction(s) is hereby:

Note your decision on the appropriate box.

- ☒ **Approved** — **All** changes apply.
- ☐ **Approved in Part** — Specify below which changes **do not** apply.
- ☐ **Denied** — State the reasons for denial below.

Comments: _____

//Hindenburg Max\\ 3736

SPE Art Unit

UNITED STATES PATENT AND TRADEMARK OFFICE

Commissioner for Patents
United States Patent and Trademark Office
P.O. Box 1450
Alexandria, VA 22313-1450
www.uspto.gov

FITZPATRICK CELLA HARPER & SCINTO
30 ROCKEFELLER PLAZA
NEW YORK NY 10112

COPY MAILED

NOV 30 2007

OFFICE OF PETITIONS

In re Application of	:	
Nobuyuki Shigeeda	:	
Application No. 10/616,936	:	DECISION GRANTING PETITION
Filed: July 11, 2003	:	UNDER 37 CFR 1.313(c)(2)
Attorney Docket No. 03500.017392.	:	

This is a decision on the petition under 37 CFR 1.313(c)(2), filed November 28, 2007, to withdraw the above-identified application from issue after payment of the issue fee.

The petition is **GRANTED**.

The above-identified application is withdrawn from issue for consideration of a submission under 37 CFR 1.114 (request for continued examination). *See* 37 CFR 1.313(c)(2).

Petitioner is advised that the issue fee paid on October 18, 2007 cannot be refunded. If, however, this application is again allowed, petitioner may request that it be applied towards the issue fee required by the new Notice of Allowance.[1]

Telephone inquiries regarding this decision should be directed to April Wise at (571) 272-1642.

This application is being referred to Technology Center AU 2625 for processing of the request for continued examination under 37 CFR 1.114 and for consideration of the concurrently filed information disclosure statement.

Frances Hicks

Frances M. Hicks
Petitions Examiner
Office of Petitions

[1] *The request to apply the issue fee to the new Notice may be satisfied by completing and returning the new Part B – Fee(s) Transmittal Form (along with any balance due at the time of submission). Petitioner is advised that the Issue Fee Transmittal Form must be completed and timely submitted to avoid abandonment of the application.*

SPE RESPONSE FOR CERTIFICATE OF CORRECTION

Paper No.: _____

DATE : 04/04/07

TO SPE OF : ART UNIT 3735

SUBJECT : Request for Certificate of Correction for Appl. No. 10/616938 Patent No.: 7112171

Please respond to this request for a certificate of correction within 7 days.

Please review the requested changes/corrections as shown in the **COCIN** document(s) in the IFW application image. No new matter should be introduced, nor should the scope or meaning of the claims be changed.

Please complete the response (see below) and forward the completed response to scanning using document code **COCX**.

Angela Green
Certificates of Correction Branch
703.308.9380 ext. 123

Thank You For Your Assistance

The request for issuing the above-identified correction(s) is hereby:
Note your decision on the appropriate box.

- [x] **Approved** — All changes apply.
- [ ] **Approved in Part** — Specify below which changes **do not** apply.
- [ ] **Denied** — State the reasons for denial below.

Comments: on dib data sheet.

SPE

3735
Art Unit

PTO/SB/44 (02-01)
Approved for use through 01/31/2004. OMB 0651-0033
U.S. Patent and Trademark Office; U.S. DEPARTMENT OF COMMERCE
Under the Paperwork Reduction Act of 1995, no persons are required to respond to a collection of information unless it displays a valid OMB control number.
(Also Form PTO-1050)

UNITED STATES PATENT AND TRADEMARK OFFICE
CERTIFICATE OF CORRECTION

PATENT NO : 7,112,171

DATED : September 26, 2006

INVENTOR(S) : Gary A. Rocheleau, et al.

It is certified that error appears in the above-identified patent and that said Letters Patent is hereby corrected as shown below:

On the front page, under "Related U.S. Application Data" insert – Continuation of application No. 09/990,108, filed Nov. 21, 2001, now Pat. No. 6,641,525 and a – before "continuation-in-part of application No. 09/917,562 –.

Column 1, line 7, after "The present application is a" insert – continuation of application No. 09/990,108, filed Nov. 21, 2001, now Pat. No. 6,641,525 and a –.

MAILING ADDRESS OF SENDER:
Customer No. 40636
Kimberly K. Baxter, No. 40,504
10700 Bren Road West
Minnetonka, MN 55343

PATENT NO. 7,112,171

AMS Research Corporation
No. of additional copies 0

Burden Hour Statement. This form is estimated to take 1.0 hours to complete. Time will vary depending upon the needs of the individual case. Any comments on the amount of time you are required to complete this form should be sent to the Chief Information Officer, Patent and Trademark Office, Washington, DC 20231. DO NOT SEND FEES OR COMPLETED FORMS TO THIS ADDRESS. SEND TO: Assistant Commissioner for Patents, Washington, DC 20231.

MAR 2 0 2007

UNITED STATES PATENT AND TRADEMARK OFFICE

Commissioner for Patents
United States Patent and Trademark Office
P.O. Box 1450
Alexandria, VA 22313-1450
www.uspto.gov

FITZPATRICK CELLA HARPER & SCINTO
30 ROCKEFELLER PLAZA
NEW YORK NY 10112

COPY MAILED

MAY 2 0 2008

OFFICE OF PETITIONS

In re Application of	:	
MOREAU et al.	:	
Application No. 10/616,940	:	DECISION ON PETITION
Filed: 07/11/2003	:	
Attorney Docket No. 01807.002322.	:	

This is a decision on the petition under 37 CFR 1.181 (no fee), filed April 22, 2008, requesting withdrawal of the holding of abandonment in the above-identified application.

The petition is **GRANTED**.

This application was held abandoned for failure to reply to the nonfinal Office action mailed July 26, 2007, which set a three (3) month shortened statutory period for reply. On February 22, 2008, the Office mailed a Notice of Abandonment.

Petitioners assert that the nonfinal Office action dated July 26, 2007, was not received. Petitioners requests that the Office re-mail the Office action and restart the period for reply.

A review of the written record indicates no irregularity in the mailing of the Office action and in the absence of any irregularity, there is a strong presumption that the Office action was properly mailed to the practitioner at the address of record. This presumption may be overcome by a showing that the Office action was not in fact received.

As stated in Section 711.03(c)(I)(A) of the Manual for Patent Examining Procedure:

> In Delgar v. Schulyer, 172 USPQ 513 (D.D.C. 1971), the court decided that the Office should mail a new Notice of Allowance in view of the evidence presented in support of the contention that the applicant's representative did not receive the original Notice of Allowance. Under the reasoning of Delgar, an allegation that an Office action was never received may be considered in a petition to withdraw the holding of abandonment. If adequately supported, the Office may grant the petition to withdraw the holding of abandonment and remail the Office action. That is, the reasoning of

> Delgar is applicable regardless of whether an application is held abandoned for failure to timely pay the issue fee (35 U.S.C. 151) or for failure to prosecute (35 U.S.C. 133).
>
> To minimize costs and burdens to practitioners and the Office, the Office has modified the showing required to establish nonreceipt of an Office action. The showing required to establish nonreceipt of an Office communication must include a statement from the practitioner describing the system used for recording an Office action received at the correspondence address of record with the USPTO. The statement should establish that the docketing system is sufficiently reliable. It is expected that the record would include, but not be limited to, the application number, attorney docket number, the mail date of the Office action and the due date for the response.
>
> Practitioner must state that the Office action was not received at the correspondence address of record, and that a search of the practitioner's record(s), including any file jacket or the equivalent, and the application contents, indicates that the Office action was not received. A copy of the record(s) used by the practitioner where the non-received Office action would have been entered had it been received is required.
>
> A copy of the practitioner's record(s) required to show non-receipt of the Office action should include the master docket for the firm. That is, if a three month period for reply was set in the nonreceived Office action, a copy of the master docket report showing all replies docketed for a date three months from the mail date of the nonreceived Office action must be submitted as documentary proof of nonreceipt of the Office action. If no such master docket exists, the practitioner should so state and provide other evidence such as, but not limited to, the following: the application file jacket; incoming mail log; calendar; reminder system; or the individual docket record for the application in question.
>
> The showing outlined above may not be sufficient if there are circumstances that point to a conclusion that the Office action may have been lost after receipt rather than a conclusion that the Office action was lost in the mail (e.g., if the practitioner has a history of not receiving Office actions).

After reviewing the documents submitted on petition, the Office concludes that the showing of record is sufficient to warrant withdrawal of the holding of abandonment. The practitioner submitted a copy of the master docket for the firm where the nonfinal Office action would have been entered had it been received and docketed. Additionally, the practitioner attested to the fact that a search of the records indicated that the nonfinal Office action was not received at the correspondence address of record. Accordingly, petitioners presented the required showing under 37 CFR 1.181.

The petition under 37 CFR 1.181 is **GRANTED**. No petition fee is required.

Technology Center Art Unit 2155 has been advised of this decision. The matter is being referred to the Technology Center's technical support staff for re-mailing of the nonfinal Office action. The three (3) month shortened statutory time period for responding to the nonfinal Office action will be set to run from the date of the re-mailing of the Office action.

Telephone inquiries related to this decision may be directed to the undersigned at (571) 272-3211.

Christina Tartera Donnell

Christina Tartera Donnell
Senior Petitions Attorney
Office of Petitions

SPE RESPONSE FOR CERTIFICATE OF CORRECTION

Paper No.: _____

DATE : September 9, 2006

TO SPE OF : ART UNIT 1756

SUBJECT : Request for Certificate of Correction for Appl. No.: 10/616944 Patent No.: 7,022,446 B2

Please respond to this request for a certificate of correction within 7 days.

Please review the requested changes/corrections as shown in the **COCIN** document(s) in the IFW application image. No new matter should be introduced, nor should the scope or meaning of the claims be changed.

Please complete the response (see below) and forward the completed response to scanning using document code **COCX**.

Elisha Evans

Certificates of Correction Branch

703-308-9390 ext. *110*

Thank You For Your Assistance

The request for issuing the above-identified correction(s) is hereby:

Note your decision on the appropriate box.

- ☒ **Approved** — **All** changes apply.
- ☐ **Approved in Part** — Specify below which changes **do not** apply.
- ☐ **Denied** — State the reasons for denial below.

Comments: _____

_____

_____

_____

_____

John L. Goodrow — [signature] — 1756

SPE — **Art Unit**

UNITED STATES PATENT AND TRADEMARK OFFICE

Commissioner for Patents
United States Patent and Trademark Office
P.O. Box 1450
Alexandria, VA 22313-1450
www.uspto.gov

NOVAK DRUCE DELUCA & QUIGG
1300 EYE STREET, N.W.
SUITE 400 EAST TOWER
WASHINGTON, DC 20005

COPY MAILED

JUL 20 2005

OFFICE OF PETITIONS

ON PETITION

In re Application of	:	
Markus Gewehr et al	:	
Application No. 10/616,950	:	
Filed: July 11, 2003	:	
Attorney Docket No. AM200040	:	

This is a decision on the petition under 37 CFR 1.137(b), filed June 13, 2005, to revive the above-identified application.

The petition is **GRANTED**.

The above-identified application became abandoned for failure to reply in a timely manner to the non-final Office action mailed September 29, 2004, which set a shortened statutory period for reply of three (3) months. No extension of time under the provisions of 37 CFR 1.136(a) were obtained. Accordingly, the above-identified application became abandoned on December 30, 2004.

Telephone inquiries concerning this decision should be directed to Irvin Dingle at (571) 272-3210.

This matter is being referred to Technology Center AU 1616 for further processing.

Irvin Dingle
Petitions Examiner
Office of Petitions
Office of the Deputy Commissioner
for Patent Examination Policy

UNITED STATES PATENT AND TRADEMARK OFFICE

COMMISSIONER FOR PATENTS
UNITED STATES PATENT AND TRADEMARK OFFICE
P.O. BOX 1450
ALEXANDRIA, VA 22313-1450
www.uspto.gov

COPY MAILED

MAR 17 2008

OFFICE OF PETITIONS

O'Melveny & Myers LLP
IP&T Calendar Department LA-1118
400 South Hope Street
Los Angeles CA 90071-2899

In re Application of	:	
Kovach, et al.	:	
Application No. 10/617,003	:	DECISION ON PETITION
Filed: July 10, 2003	:	
Attorney Docket No. 69010-263	:	

This is a decision on the petition under the unintentional provisions of 37 CFR 1.137(b), filed December 13, 2007, to revive the above-identified application.

The petition is GRANTED.

This application became abandoned November 15, 2007 for failure to timely submit a proper reply to the Notice of Allowance and Fee(s) Due mailed August 14, 2007. The Notice of Allowance and Fee(s) Due set a three month shortened statutory period of time for reply. Notice of Abandonment December 11, 2007.

The petition satisfies the requirements of 37 CFR 1.137(b) in that petitioners have supplied the required reply, the required petition fee; and a proper statement of unintentional delay.

Telephone inquiries concerning this decision should be directed to the undersigned at (571) 272-3205.

This application is being referred to Publishing Division for processing into a patent.

Alesia M. Brown
Petitions Attorney
Office of Petitions

UNITED STATES PATENT AND TRADEMARK OFFICE

Commissioner for Patents
United States Patent and Trademark Office
P.O. Box 1450
Alexandria, VA 22313-1450
www.uspto.gov

HOGAN & HARTSON LLP
500 SOUTH GRAND AVE
SUITE 1900
LOS ANGELES CA 90071-2611

COPY MAILED

MAR 2 2 2005

OFFICE OF PETITIONS

In re Application of Robert A. DeMars Application No. 10/617,004 Filed: July 9, 2003 Attorney Docket No. 89240.0002	: : : : :	ON PETITION

This is a decision on the petition under 37 CFR 1.137(b), filed March 14, 2005.

The petition under 37 CFR 1.137(b) is **GRANTED**.

The above-identified application became abandoned for failure to timely file a response to the non-final Office action mailed April 20, 2004. This Office action set a shortened statutory period for reply of three months. No extensions of time under 37 CFR 1.136(a) were obtained. Accordingly, the above-identified application became abandoned on July 21, 2004. A Notice of Abandonment was mailed on February 23, 2005.

Petitioner has paid the petition fee, submitted the required reply in the form of an amendment, and made the proper statement of unintentional delay.

The application file is being forwarded to Group Art Unit 3744 for consideration of the amendment filed March 14, 2005.

Telephone inquiries concerning this decision should be directed to the undersigned at (571)272-3207.

Cliff Congo

Cliff Congo
Petitions Attorney
Office of Petitions

UNITED STATES PATENT AND TRADEMARK OFFICE

COMMISSIONER FOR PATENTS
UNITED STATES PATENT AND TRADEMARK OFFICE
P.O. BOX 1450
ALEXANDRIA, VA 22313-1450
www.uspto.gov

Paper No.

Anthony P. Curtis, Ph.D
Brinks Hofer Gilson & Lione
P.O. Box 10395
Chicago IL 60610

COPY MAILED

JUL 09 2007

OFFICE OF PETITIONS

In re Patent No. 7,150,092	:	
Naoya Hasegawa	:	DECISION ON REQUEST
Issue Date: December 19, 2006	:	FOR
Application No. 10/617,010	:	RECONSIDERATION OF
Filed: July 10, 2003	:	PATENT TERM ADJUSTMENT
Attorney Docket No. 9281/4594	:	

This is a decision on the "PETITION FOR RECONSIDERATION OF PATENT TERM ADJUSTMENT," filed January 10, 2007. Patentee requests that the patent term adjustment indicated on the face of the patent be corrected from five hundred seventeen (517) days to six hundred seventy-nine (679) days.

The request for reconsideration of the patent term adjustment indicated in the patent is **DISMISSED**.

Patentee is given **TWO (2) MONTHS** from the mailing date of this decision to respond. No extensions of time will be granted under § 1.136.

Nonetheless, for the reasons stated herein, correction of the patent term adjustment is required. The patent term adjustment indicated on the patent is to be corrected by issuance of a certificate of correction showing a revised Patent Term Adjustment of **four hundred fifty-two (452)** days.

On December 19, 2006, the above-identified application matured into U.S. Patent No. 7,150,092. The instant request for reconsideration filed January 10, 2007 was timely filed within 2

months of the date the patent issued. See § 1.705(d). The Patent issued with a Patent Term Adjustment of 517 days. Patentee requests correction of the patent term adjustment to increase the patent term adjustment to 679 days on the basis that the patent issued 3 years and 162 days after the date on which the application was filed. Patentee asserts entitlement to an additional period of adjustment under 37 CFR 1.703(b).

It is agreed that the instant patent issued 3 years and 162 days after its filing date. However, any days of delay for Office issuance of the patent more than 3 years after the filing date of the application, which overlap, with the days of patent term adjustment accorded prior to the issuance of the patent will not result in any additional patent term adjustment. Further, in considering the overlap, the entire period during which the application was pending (except for periods excluded under 35 U.S.C. 154(b)(1)(B)(i)-(iii), and not just the period beginning three years after the actual filing date of the application, is the period of delay under 35 U.S.C. 154(b)(1)(B) in determining whether periods of delay overlap under 35 U.S.C. 154(b)(2)(A). See 35 U.S.C. 154(b) (1)(B); 35 U.S.C. 154(b)(2)(A); and 37 CFR 1.703(f). In this instance, the period of delay of 162 days attributable to the delay in the issuance of the patent overlaps with the adjustment of 521 days attributable to grounds specified in § 1.702(a)(1). Thus, no additional period of adjustment beyond the 521 days was entered.

However, a review of the application history reveals that an additional period of reduction pursuant to 1.704(c)(10) should have been entered. Pursuant to 37 CFR § 1.704(c)(10), the filing of a paper after the mailing of the notice of allowance is a failure to engage in reasonable efforts to conclude prosecution. After the mailing of the notice of allowance on May 17, 2006, applicant filed a supplemental Information Disclosure Statement (IDS) on August 21, 2006. This IDS did not include a § 1.704(d) statement. The Office responded to the IDS with the mailing of a supplemental Notice of Allowability on October 24, 2006. Accordingly, a period of reduction of 65 days should have been entered for the period beginning on August 21, 2006 and ending on October 24, 2006.

In view thereof, the patent should have issued with a revised patent term adjustment of 452 days.

The Office acknowledges submission of the $200.00 fee set forth in 37 CFR 1.18(e). No additional fees are required.

The application file is being forwarded to the Certificates of Correction Branch for issuance of a certificate of correction in order to rectify this error. The Office will issue a certificate of correction indicating that the term of the above-identified patent is extended or adjusted by **FOUR HUNDRED FIFTY-TWO (452)** days.

Telephone inquiries specific to this matter should be directed to the undersigned at (571) 272-3219.

Nancy Johnson
Senior Petitions Attorney
Office of Petitions

ATTACHMENT: Copy of DRAFT Certificate of Correction

UNITED STATES PATENT AND TRADEMARK OFFICE

CERTIFICATE OF CORRECTION

PATENT : 7,150,092 B2

DATED : December 19, 2006

INVENTOR(S) : Hasegawa

DRAFT

It is certified that error appears in the above-identified patent and that said Letters Patent is hereby corrected as shown below:

On the cover page,

[*] Notice: Subject to any disclaimer, the term of this patent is extended or adjusted under 35 USC 154(b) by (517) days

Delete the phrase "by 517" and insert – by 452 days--

UNITED STATES PATENT AND TRADEMARK OFFICE

COMMISSIONER FOR PATENTS
UNITED STATES PATENT AND TRADEMARK OFFICE
P.O. BOX 1450
ALEXANDRIA, VA 22313-1450
www.uspto.gov

YINGJIAN CHEN
1123 WISTERIA DRIVE
FREMONT, CA 94539

COPY MAILED
FEB 10 2005
OFFICE OF PETITIONS

In re Application of :
Yingjian Chen :
Application No. 10/617,015 :
Filed: July 10, 2003 : ON PETITION
Title of Invention: :
NANOTUBE SPIN VALVE AND :
METHOD OF PRODUCING THE SAME :

This is a decision on the Petition for Revival of an Application Abandoned Unavoidably Under 37 CFR 1.137(a), filed December 2, 2004, to revive the above-identified application.

The petition is **dismissed.**

Any further petition to revive the above-identified application (under 37 CFR 1.137(a)), must be submitted within TWO (2) MONTHS from the mail date of this decision. Extensions of time under 37 CFR 1.136(a) are permitted. The reconsideration request should include a cover letter entitled "Request for Reconsideration of Petition under 37 CFR 1.137", and be addressed to Petitions Attorney Derek L. Woods. This is **not** final agency action within the meaning of 5 U.S.C. § 704.

Background

The above-identified application became abandoned for failure to timely and properly reply Notice to File Missing Parts of Nonprovisional Application, mailed October 8, 2003. The Notice set a two (2) month period for reply. No reply having been received, the application became abandoned December 9, 2003. A Notice of Abandonment was mailed Novemeber 23, 2004.

Applicant's Response

In response to the Notice, Applicant files the instant petition and asserts that the delay in responding to the Notice was to allow time for the inventor "to seek legal advice in order to

fully understand the legal ramification of this patent application before any further action was taken." The Applicant states that "[i]t has taken longer than anticipated by the inventor, and certainly longer than the TWO month set forth in the initial office action." *Petition* at p.3.

A Grantable Petition Under 37 CFR 1.137(a)

A grantable petition to revive an abandoned application under 37 CFR 1.137(a) must be accompanied by: (**1**) the required reply (unless previously filed), which may met by the filing of a notice of appeal and the requisite fee; a continuing application; an amendment or request for reconsideration which *prima facie* places the application in condition for allowance, or a first or second submission under 37 CFR 1.129(a) if the application has been pending for at least two years as of June 8, 1995, taking into account any reference made in such application to any earlier filed application under 35 USC 120, 121 and 365(c); (**2**) the petition fee as set forth in 37 CFR 1.17(l); (**3**) a showing to the satisfaction of the Commissioner that the entire delay in filing the required reply from the due date for the reply until the filing of a grantable petition pursuant to 37 CFR 1.137(a) was unavoidable; and (**4**) any terminal disclaimer (and fee as set forth in 37 CFR 1.20(d)) required pursuant to 37 CFR 1.137(c).

Applicant lacks item (**3**) as set forth above.

Applicable Law

The general standard applied by the Office requires petitioner to establish that petitioner treated the patent the same as a reasonable and prudent person would treat his or her most important business.[1]35 U.S.C. 41(c)(1) states, "The Commissioner may accept the payment of any maintenance fee ... at any time ... if the delay is shown *to the satisfaction of the Commissioner* to have been unavoidable." (emphasis added). "In the specialized field of patent law, ... the Commissioner of Patent and Trademarks is primarily responsible for the application and enforcement of the various narrow and technical statutory and regulatory provisions. His interpretation of those provisions is entitled to considerable deference." Rydeen

[1] The Commissioner is responsible for determining the standard for unavoidable delay and for applying that standard.

v. Quigg, 748 F.Supp. 900, 904, 16 U.S.P.Q.2d (BNA)1876 (D.D.C. 1990), aff'd without opinion (Rule 36), 937 F.2d 623 (Fed. Cir. 1991) (citing Morganroth v. Quigg, 885 F.2d 843, 848, 12 U.S.P.Q.2d (BNA) 1125 (Fed. Cir. 1989); Ethicon, Inc. v. Quigg, 849 F.2d 1422, 1425, 7 U.S.P.Q.2d (BNA) 1152 (Fed. Cir. 1988) ("an agency' interpretation of a statute it administers is entitled to deference"); see also Chevron U.S.A. Inc. v. Natural Resources Defense Council, Inc., 467 U.S. 837, 844, 81 L. Ed. 694, 104 S. Ct. 2778 (1984) ("if the statute is silent or ambiguous with respect to the specific issue, the question for the court is whether the agency's answer is based on a permissible construction of the statute.").

"The critical phrase 'unless it be shown to the satisfaction of the Commissioner that such delay was unavoidable' has remained unchanged since first enacted in 1861." Smith v. Mossinghoff, 671 F.2d 533, 538, 213 U.S.P.Q. (BNA) 977 (D.C. Cir. 1982). The standard for "unavoidable" delay for reinstating a patent is the same as the unavoidable standard for reviving an application. See Ray v. Lehman, 55 F.3d 606, 608-609, 34 U.S.P.Q.2d (BNA) 1786, 1787 (Fed. Cir. 1995) (citing In re patent No. 4,409,763, 7 U.S.P.Q.2d (BNA) 1798, 1800 (Comm'r Pat. 1990; Smith v. Mossinghoff, 671 F.2d 533, 538, 213 U.S.P.Q. (BNA) 977 (D.C. Cir. 1982). The court in In re Mattullath, accepted the standard which had been proposed by Commissioner Hall which "requires no more or greater care or diligence than is generally used and observed by prudent and careful men in relation to their most important business." In re Mattullath, 38 App. D.C. 497, 514-515 (1912) (quoting Ex parte Pratt, 1887 Dec. Comm'r Pat. 31, 32-33 (1887)). However, "The question of whether an applicant's delay in prosecuting an application was unavoidable [will] be decided on a case-by-case basis, taking all of the facts and circumstances into account."[2] Nonawareness of the content of, or a misunderstanding of, PTO statutes, PTO rules, the MPEP, or Official Gazette notices, does not constitute unavoidable delay.[3] The statute requires a "showing"

---

[2] Smith v. Mossinghoff, 671 F.2d 533, 538, 213 U.S.P.Q. (BNA) 977 (1982).

[3] See Smith v. Mossinghoff, 671 F.2d 533, 538, 213 U.S.P.Q. (BNA) 977 (Fed. Cir. 1982) (citing Potter v. Dann, 201 U.S.P.Q. (BNA) 574 (D. D.C. 1978) for the proposition that counsel's nonawareness of PTO rules does not constitute "unavoidable" delay)); Vincent v. Mossinghoff, 1985 U.S. Dist. LEXIS 23119, 13, 230 U.S.P.Q. (BNA) 621 (D. D.C. 1985) (Plaintiffs, through their counsel's actions, **or their own**, must be held responsible for having noted the MPEP section and Official Gazette notices expressly stating that the

by petitioner. Therefore, petitioner has the burden of proof. The decision will be based solely on the written, administrative record in existence. It is not enough that the delay was unavoidable; petitioner must prove that the delay was unavoidable. A petition will not be granted if petitioner provides insufficient evidence to "show" that the delay was unavoidable.

Applicant is further advised that the Patent and Trademark Office must rely on the actions or inactions of duly authorized and voluntarily chosen representatives of the applicant, and applicant is bound by the consequences of those actions or inactions. Link v. Wabash, 370 U.S. 626, 633-34 (1962); Huston v. Ladner, 973 F.2d 1564, 1567, 23 USPQ2d 1910, 1913 (Fed. Cir. 1992); see also Haines v. Quigg, 673 F. Supp. 314, 317, 5 USPQ2d 1130, 1132 (D.N. Ind. 1987). Specifically, petitioner's delay caused by the actions or inactions of his voluntarily chosen representative does not constitute unavoidable delay within the meaning of 35 U.S.C. 133 or 37 CFR 1.137(a). Haines v. Quigg, 673 F. Supp. 314, 5 USPQ2d 1130 (D. Ind. 1987); Smith v. Diamond, 209 USPQ 1091 (D.D.C. 1981); Potter v. Dann, 201 USPQ 574 (D.D.C. 1978); Ex parte Murray, 1891 Dec. Comm'r Pat. 130, 131 (Comm'r Pat. 1891). In re Mattullath, 38 App. D.C. 497, 514-15 (1912)(quoting Ex parte Pratt, 1887 Dec. Comm'r Pat. 31, 32-33 (1887)); see also Winkler v. Ladd, 221 F. Supp. 550, 552, 138 USPQ 666, 167-68 (D.D.C. 1963), aff'd, 143 USPQ 172 (D.C. Cir. 1963); Ex parte Henrich, 1913 Dec. Comm'r Pat. 139, 141 (1913).

Finally, a "delay (in responding) resulting from the lack of knowledge or improper application of the patent statute, rules of practice, or MPEP, [] does not constitute unavoidable delay." MPEP 711.03(c).

Applicant's Assertion

Applicant asserts that the delay was to allow time for the inventor "to seek legal advice in order to fully understand the legal ramification of this patent application before any further action was taken."

---

certified mailing procedures outlined in 37 CFR 1.8(a) do not apply to continuation applications.) (Emphasis added).

Analysis and Conclusion

As to item (**3**), Applicant has not provided an adequate showing of unavoidable delay. The general standard applied by the Office requires petitioner to establish that petitioner treated the patent the same as a reasonable and prudent person would treat his or her most important business. It is the conclusion of this Office that a reasonable and prudent person, in relation to their most important business, would timely prosecute the application to avoid abandonment. Here, Applicant sought legal advice, which apparently precluded Applicant from prosecuting the application. Thus Applicant chose, as his most important business, to seek legal advice to the exclusion of prosecuting his application.

Moreover, Applicant has failed to account for the entire delay from the due date for the reply until the filing of a grantable petition. Applicant merely states that the delay was to allow time for the inventor "to seek legal advice in order to fully understand the legal ramification of this patent application before any further action was taken." Applicant failes to account for the period from when the reply was due; December 8, 2003, until the filing of this petition. Applicant merely provides that it took longer than anticipated, and certainly longer than two months.

Alternative venue

Applicant is strongly urged to file a petition stating that the delay was unintentional. Public Law 97-247, § 3, 96 Stat. 317 (1982), which revised patent and trademark fees, amended 35 U.S.C. § 41(a)(7) to provide for the revival of an "unintentionally" abandoned application without a showing that the delay in was "unavoidable." An "unintentional" petition under 37 CFR 1.137(b) must be accompanied by the required fee, currently $750.00.

The filing of a petition under 37 CFR 1.137(b) cannot be intentionally delayed and therefore must be filed promptly. A person seeking revival due to unintentional delay can not make a statement that the delay was unintentional unless the entire delay, including the delay from the date it was discovered that the application was abandoned until the filing of the petition to revive under 37 CFR 1.137(b), was unintentional. A statement

that the delay was unintentional is not appropriate if petitioner intentionally delayed the filing of a petition for revive under 37 CFR 1.137(b).

Further correspondence with respect to this matter should be addressed as follows:

By mail: Commissioner for Patents
PO Box 1450
Alexandria, VA 22313-1450

By FAX: (703) 872-9306
Attn: Office of Petitions

By hand: Customer Service Window
Randolph Building
401 Dulany Street
Alexandria, VA 22314

Telephone inquiries concerning this matter should be directed to the undersigned at (571) 272-3232.

Derek L. Woods
Attorney/Advisor
Office of Petitions

UNITED STATES PATENT AND TRADEMARK OFFICE

COMMISSIONER FOR PATENTS
UNITED STATES PATENT AND TRADEMARK OFFICE
P.O. BOX 1450
ALEXANDRIA, VA 22313-1450
www.uspto.gov

YINGJIAN CHEN
1123 WISTERIA DRIVE
FREMONT, CA 94539

In re Application of	:	
Yingjian Chen	:	
Application No. 10/617,015	:	
Filed: July 10, 2003	:	ON PETITION
Title of Invention:	:	
NANOTUBE SPIN VALVE AND	:	
METHOD OF PRODUCING THE SAME	:	

COPY MAILED
APR 29 2005
OFFICE OF PETITIONS

This is a decision in response to the petition under 37 CFR 1.137(b), filed March 21, 2005, to revive the above-identified application.

This Petition is hereby **granted**.

The above-identified application became abandoned for failure to timely and properly reply Notice to File Corrected Application Papers, mailed October 8, 2003. The Notice set a two (2) month period for reply. No reply having been received, the application became abandoned December 9, 2003. A Notice of Abandonment was mailed Novemeber 23, 2004.

With the instant petition, Petitioner has satisfied the requirements of a grantable petition under 37 CFR 1.137(b). The reply to the October 8, 2003 Notice is filed with the instant petition. Accordingly, the petition is granted.

This application is being forwarded to the Office of Initial Patent Examination for continued processing in due course.

Telephone inquiries concerning this matter should be directed to the undersigned at (703) 305-0014.

Derek L. Woods
Petitions Attorney
Office of Petitions

UNITED STATES PATENT AND TRADEMARK OFFICE

Commissioner for Patents
United States Patent and Trademark Office
P.O. Box 1450
Alexandria, VA 22313-1450
www.uspto.gov

MACPHERSON KWOK CHEN & HEID LLP
2033 GATEWAY PLACE, SUITE 400
SAN JOSE, CA 95110

COPY MAILED

JUN 17 2008

OFFICE OF PETITIONS

In re Application of
LEE, et al.
Application No. 10/617,026
Filed: July 11, 2003
Attorney Docket No. **AB-1608 US**

DECISION GRANTING PETITION
UNDER 37 CFR 1.313(c)(2)

This is a decision on the petition under 37 CFR 1.313(c)(2), filed June 16, 2008, to withdraw the above-identified application from issue after payment of the issue fee.

The petition is **GRANTED.**

The above-identified application is withdrawn from issue for consideration of a submission under 37 CFR 1.114 (request for continued examination). *See* 37 CFR 1.313(c)(2).

Petitioner is advised that the issue fee paid on May 7, 2008 cannot be refunded. If, however, this application is again allowed, petitioner may request that it be applied towards the issue fee required by the new Notice of Allowance.[1]

Telephone inquiries should be directed to the undersigned at (571) 272-7253.

This application is being referred to Technology Center AU 2629 for processing of the request for continued examination under 37 CFR 1.114 and for consideration of the concurrently filed information disclosure statement.

Monica A. Graves
Petitions Examiner
Office of Petitions

---

[1] *The request to apply the issue fee to the new Notice may be satisfied by completing and returning the new Part B – Fee(s) Transmittal Form (along with any balance due at the time of submission). Petitioner is advised that the Issue Fee Transmittal Form* ***must*** *be completed and timely submitted to avoid abandonment of the application.*

UNITED STATES PATENT AND TRADEMARK OFFICE

Commissioner for Patents
United States Patent and Trademark Office
P.O. Box 1450
Alexandria, VA 22313-1450
www.uspto.gov

4/12/07

MARTIN D. MOYNIHAN
PRTSI INC.
P.O. BOX 16446
ARLINGTON VA 22215

In re Application of:
SPECTOR, AVNER
Serial No.: 10/617,037
Filed: Jul. 11, 2003
Docket: 26141
Title: PRESSURE-PULSE THERAPY APPARATUS

DECISION ON PETITION OF NON-ENTRY OF AFTER FINAL AMENDMENT

This is a decision on the petition filed on Jan. 16, 2007 to enter the amendment after final under 37 CFR 1.116. The petition is being considered pursuant to 37 CFR 1.181.

The petition is **DISMISSED**.

In the petition the applicant requests a review of the examiner's refusal to enter the amendment after final filed on Dec. 11, 2006 in the Advisory Action issued by the examiner on Jan. 16, 2007. In the Advisory Action, the examiner refused to enter the amendment after final because the newly amended claim 27 raises new issues requiring further consideration and/or search. In particular, petitioner attempts to broaden claim 27 by deleting the limitation "within said enclosure and". Petitioner stated that the newly amended claim 27 was made to correct a clear and obvious error since it was intended to be a generic claim.

The record shows that:

1) On Sep. 1, 2005, the examiner issued a non-final Office action and acknowledged the applicant's election of the species depicted in figure 7.
2) On Nov. 3, 2005, the applicant filed a response to the non-final Office action, presented amendments to claims 1, 3-6, 8 and presented new claims 19- 26.
3) On Jan. 30, 2006, the examiner issued a final Office action and rejected claim 25 under 35 USC 112 1st. The examiner stated that the specification as originally filed failed to disclose the limitations set forth in claim 25 pertaining to the elected species in combination with "non-overlapping zones".
4) On May 30, 2006, the applicant submitted an RCE, canceled claims 1-26 and presented new claims 27-46.
5) On Aug. 3, 2006, the examiner issued a non-final Office action and rejected claims 27-46 under 35 USC 112 1st paragraph and 35 USC 112 2nd paragraph.

6) On Sep. 8, 2006, the applicant amended claims 27 and 29.
7) On Nov. 20, 2006, the examiner issued a final Office action. In the final Office action, the examiner objected to claims 27-46 because in claim 27, line 6, "said closed end" lacked proper antecedent basis and rejected claims 33, 34 and 36-43 under 35 USC 112 1st paragraph for failing to comply with the written description requirement.
9) On Dec. 11, 2006, the applicant filed an amendment after final under 37 CFR 1.116 with amendments to claim 27.
10) On Dec. 29, 2006, the examiner issued an advisory action refusing to enter the Dec. 11, 2006 amendment after final because the deletion of the limitation "within said enclosure and" raises new issues requiring further consideration and/or search.
11) On Jan. 16, 2007, the present petition to request entry of the amendment after final of Dec. 11, 2006 was filed. Petitioner argues that the amendment after final was made to correct a clear and obvious error since claim 27 was intended to be a generic claim.

Discussion and Analysis

Relevant portions of 37 CFR 1.116 Amendments and affidavits or other evidence after final action and prior to appeal, state: (a) An amendment after final action must comply with 37 CFR 1.114 or this section. (b) After a final rejection or other final action (37 CFR 1.113) in an application or in an ex parte reexamination filed under 37 CFR 1.510, or an action closing prosecution (37 CFR 1.949) in an inter partes reexamination filed under 37 CFR 1.913, but before or on the same date of filing an appeal (37 CFR 41.31 or 37 CFR 41.61 of this title): (1) An amendment may be made canceling claims or complying with any requirement of form expressly set forth in a previous Office action; (2) An amendment presenting rejected claims in better form for consideration on appeal my be admitted; or (3) An amendment touching the merits of the application or patent under reexamination may be admitted upon a showing of good and sufficient reasons why the amendment is necessary and was not earlier presented. Furthermore, entry of amendments after final rejection is not a matter of right (see 37 CFR 1.116).

In order to determine whether or not that the broadened claim 27 raises new issues, which requires further consideration and/or search, a comparison of the newly amended claim 27 of Dec. 11, 2006 and the existing claim 27 of Sep. 8, 2006 under final rejection, must be made. The difference is the deletion of the limitation "within said enclosure and" from the finally rejected claim 27. The deletion of "within said enclosure and" broadened claim 27 which would require further consideration and search to the broader structure as correctly pointed out in the examiner's advisory action of Dec. 29, 2006. Applicant failed to show any good and sufficient reasons why the amendment is necessary and was not earlier presented. The review of the record shows that the examiner was in compliance with proper examining practice as set forth in MPEP 714.13. Therefore, the amendment after final filed on Dec. 11, 2006 is not in compliance with 37 CFR 1.116. The examiner's advisory action in refusing to admit the amendment of Dec. 11, 2006 is correct.

Conclusion

For the foregoing reasons, the relief requested by petitioners will not be granted. Specifically, the examiner's refusal admitting the amendment after final filed Dec. 11, 2006 is proper.

The application is being forwarded to Examiner Smith of Art Unit 3737 for further processing. Any request for reconsideration of this decision must be submitted within TWO (2) MONTHS from the mail date of this decision, 37 CFR 1.181(f). No extension of time under 37 CFR 1.136(a) is permitted. The reconsideration request should include a cover letter entitled "Renewed Petition under 37 CFR 1.181". Any inquiry regarding this decision should be directed to Marc Jimenez, Training Quality Assurance Specialist, at (571) 272-4530.

The petition is dismissed.

Frederick R. Schmidt, Director
Technology Center 3700

UNITED STATES PATENT AND TRADEMARK OFFICE

UNITED STATES DEPARTMENT OF COMMERCE
United States Patent and Trademark Office
Address: COMMISSIONER FOR PATENTS
P.O. Box 1450
Alexandria, Virginia 22313-1450
www.uspto.gov

APPL NO.	FILING OR 371 (c) DATE	ART UNIT	FIL FEE REC'D	ATTY.DOCKET NO	DRAWINGS	TOT CLMS	IND CLMS
10/617,060	07/10/2003	1645	375	47675-52	2	18	2

CONFIRMATION NO. 2645

CORRECTED FILING RECEIPT

OC000000016429886

22504
DAVIS WRIGHT TREMAINE, LLP
2600 CENTURY SQUARE
1501 FOURTH AVENUE
SEATTLE, WA 98101-1688

Date Mailed: 06/30/2005

Receipt is acknowledged of this regular Patent Application. It will be considered in its order and you will be notified as to the results of the examination. Be sure to provide the U.S. APPLICATION NUMBER, FILING DATE, NAME OF APPLICANT, and TITLE OF INVENTION when inquiring about this application. Fees transmitted by check or draft are subject to collection. Please verify the accuracy of the data presented on this receipt. **If an error is noted on this Filing Receipt, please mail to the Commissioner for Patents P.O. Box 1450 Alexandria Va 22313-1450. Please provide a copy of this Filing Receipt with the changes noted thereon. If you received a "Notice to File Missing Parts" for this application, please submit any corrections to this Filing Receipt with your reply to the Notice. When the USPTO processes the reply to the Notice, the USPTO will generate another Filing Receipt incorporating the requested corrections (if appropriate).**

Applicant(s)

Peter H. Kay, Frankland, AUSTRALIA;

Assignment For Published Patent Application

Epigenomics AG

Power of Attorney: The patent practitioners associated with Customer Number **22504**.

Domestic Priority data as claimed by applicant

This application is a CON of 09/920,000 07/31/2001 ABN
which is a CON of PCT/AU00/00053 02/01/2000

Foreign Applications

AUSTRALIA PP8448 02/01/1999

If Required, Foreign Filing License Granted: 10/16/2003

The country code and number of your priority application, to be used for filing abroad under the Paris Convention, is US10/617,060

Projected Publication Date: 10/06/2005

Non-Publication Request: No

Early Publication Request: No

**** SMALL ENTITY ****

Title

Use of fluorescent molecular beacons in the detection of methylated nucleic acid

Preliminary Class

435

PROTECTING YOUR INVENTION OUTSIDE THE UNITED STATES

Since the rights granted by a U.S. patent extend only throughout the territory of the United States and have no effect in a foreign country, an inventor who wishes patent protection in another country must apply for a patent in a specific country or in regional patent offices. Applicants may wish to consider the filing of an international application under the Patent Cooperation Treaty (PCT). An international (PCT) application generally has the same effect as a regular national patent application in each PCT-member country. The PCT process **simplifies** the filing of patent applications on the same invention in member countries, but **does not result** in a grant of "an international patent" and does not eliminate the need of applicants to file additional documents and fees in countries where patent protection is desired.

Almost every country has its own patent law, and a person desiring a patent in a particular country must make an application for patent in that country in accordance with its particular laws. Since the laws of many countries differ in various respects from the patent law of the United States, applicants are advised to seek guidance from specific foreign countries to ensure that patent rights are not lost prematurely.

Applicants also are advised that in the case of inventions made in the United States, the Director of the USPTO must issue a license before applicants can apply for a patent in a foreign country. The filing of a U.S. patent application serves as a request for a foreign filing license. The application's filing receipt contains further information and guidance as to the status of applicant's license for foreign filing.

Applicants may wish to consult the USPTO booklet, "General Information Concerning Patents" (specifically, the section entitled "Treaties and Foreign Patents") for more information on timeframes and deadlines for filing foreign patent applications. The guide is available either by contacting the USPTO Contact Center at 800-786-9199, or it can be viewed on the USPTO website at http://www.uspto.gov/web/offices/pac/doc/general/index.html.

LICENSE FOR FOREIGN FILING UNDER
Title 35, United States Code, Section 184
Title 37, Code of Federal Regulations, 5.11 & 5.15

GRANTED

The applicant has been granted a license under 35 U.S.C. 184, if the phrase "IF REQUIRED, FOREIGN FILING LICENSE GRANTED" followed by a date appears on this form. Such licenses are issued in all applications where the conditions for issuance of a license have been met, regardless of whether or not a license may be required as set forth in 37 CFR 5.15. The scope and limitations of this license are set forth in 37 CFR 5.15(a) unless an earlier license has been issued under 37 CFR 5.15(b). The license is subject to revocation upon written notification. The date indicated is the effective date of the license, unless an earlier license of similar scope has been granted under 37 CFR 5.13 or 5.14.

This license is to be retained by the licensee and may be used at any time on or after the effective date thereof unless it is revoked. This license is automatically transferred to any related applications(s) filed under 37 CFR 1.53(d). This license is not retroactive.

The grant of a license does not in any way lessen the responsibility of a licensee for the security of the subject matter as imposed by any Government contract or the provisions of existing laws relating to espionage and the national security or the export of technical data. Licensees should apprise themselves of current regulations especially with respect to certain countries, of other agencies, particularly the Office of Defense Trade Controls, Department of State (with respect to Arms, Munitions and Implements of War (22 CFR 121-128)); the Office of Export Administration, Department of Commerce (15 CFR 370.10 (j)); the Office of Foreign Assets Control, Department of Treasury (31 CFR Parts 500+) and the Department of Energy.

NOT GRANTED

No license under 35 U.S.C. 184 has been granted at this time, if the phrase "IF REQUIRED, FOREIGN FILING LICENSE GRANTED" DOES NOT appear on this form. Applicant may still petition for a license under 37 CFR 5.12, if a license is desired before the expiration of 6 months from the filing date of the application. If 6 months has lapsed from the filing date of this application and the licensee has not received any indication of a secrecy order under 35 U.S.C. 181, the licensee may foreign file the application pursuant to 37 CFR 5.15(b).

UNITED STATES PATENT AND TRADEMARK OFFICE

Commissioner for Patents
United States Patent and Trademark Office
P.O. Box 1450
Alexandria, VA 22313-1450
www.uspto.gov
DIW Apr-07

MEDLEN & CARROLL, LLP
101 HOWARD STREET
SUITE 350
SAN FRANCISCO CA 94105

COPY MAILED
APR 25 2007
OFFICE OF PETITIONS

In re Application of	:	
Beer et al.	:	
Application No. 10/617,067	:	DECISION ON PETITION
Filed: 10 July, 2003	:	
Atty Docket UM-08196	:	
	:	

This is a decision on the petition filed on 2 February, 2007, under 37 CFR 1.137(b),[1] to revive the above-identified application.

The petition is **GRANTED**.

The application became abandoned on 16 June, 2006, for failure to timely file a response to the Office action requiring restriction and/or election, mailed on 15 May, 2006, which set a one (1)

---

[1] Effective December 1, 1997, the provisions of 37 CFR 1.137(b) now provide that where the delay in reply was unintentional, a petition may be filed to revive an abandoned application or a lapsed patent pursuant to 37 CFR 1.137(b). A grantable petition filed under the provisions of 37 CFR 1.137(b) must be accompanied by:

(1) the required reply, unless previously filed. In a nonprovisional application abandoned for failure to prosecute, the required reply may be met by the filing of a continuing application. In a nonprovisional utility or plant application filed on or after June 8, 1995, and abandoned for failure to prosecute, the required reply may also be met by the filing of a request for continuing examination in compliance with § 1.114. In an application or patent, abandoned or lapsed for failure to pay the issue fee or any portion thereof, the required reply must be the payment of the issue fee or any outstanding balance thereof. In an application, abandoned for failure to pay the publication fee, the required reply must include payment of the publication fee.

(2) the petition fee as set forth in 37 CFR 1.17(m);

(3) a statement that the entire delay in filing the required reply from the due date for the reply until the filing of a grantable petition pursuant to 37 CFR 1.137(b) was unintentional. The Commissioner may required additional information where there is a question whether the delay was unintentional; and

(4) any terminal disclaimer (and fee as set forth in 37 CFR 1.20(d)) required pursuant to 37 CFR 1.137(c)).

month shortened statutory period for reply. Notice of Abandonment was mailed on 11 January, 2007.

Petitioner has filed an amendment including an election.

The application is being referred to the Technology Center Art Unit 1643 for further processing.

Telephone inquiries concerning this matter may be directed to the undersigned at (571)272-3231.

Douglas I. Wood
Senior Petitions Attorney
Office of Petitions

UNITED STATES PATENT AND TRADEMARK OFFICE

Commissioner for Patents
United States Patent and Trademark Office
P.O. Box 1450
Alexandria, VA 22313-1450
www.uspto.gov

BRINKS HOFER GILSON & LIONE
PO BOX 10395
CHICAGO IL 60610

COPY MAILED
AUG 29 2007
OFFICE OF PETITIONS

In re	:
Tsutomu Kunishima	: DECISION ON REQUEST
Application No. 10/617,087	: FOR RECONSIDERATION OF
Filed: July 10, 2003	: PATENT TERM ADJUSTMENT
Patent No. 7,158,192	: UNDER 37 C.F.R. §1.705(d)
Issued: January 2, 2007	:

This letter is in response to the "PETITION FOR RECONSIDERATION OF PATENT TERM ADJUSTMENT" filed February 5, 2007[1], requesting correction of the patent term adjustment (PTA) indicated on the patent due to the patent not issuing within three years of its filing.

The request for reconsideration of the patent term adjustment indicated on the patent is **DISMISSED**.

On January 2, 2007, the above-identified application matured into U.S. Patent No. 7,158,192. The patent issued with a Patent Term Adjustment of five hundred, fifty-two (552) days (552 days of PTO delay and 0 days of applicant delay).

---

[1] The request was timely in accordance with 37 C.F.R. §1.705(d). See Revision of Patent Term Extension and Patent Term Adjustment Provisions, Final Rule (April 22, 2004), 69 Fed. Reg 21704. December 10, 2006 fell on a Sunday. See 37 C.F.R. § 1.7(a).

Patentees state that the determination of patent term adjustment should have been increased by 176 days due to the PTO delay incurred for the number of days between the 3 year date and the issue date.

Patentees' argument is not well-taken. As the 176 additional days overlap with the 552 days of PTO delay already accorded, this delay does not result in any additional patent term adjustment. See 35 U.S.C. 154(b)(1)(B), 35 U.S.C. 154(b)(2)(A), and 37 C.F.R. § 1.703(f). See also Revision of Patent Term Extension and Patent Term Adjustment Provisions; Final Rule, 69 Fed. Reg. 21704 (April 22, 2004).

In view thereof, the correct determination of PTA at the time of issuance is five hundred fifty-two (552) days.

Receipt of the $200 fee set forth in 37 C.F.R. § 1.18(e) is acknowledged.

Telephone inquiries specific to this matter should be directed to Cliff Congo, Petitions Attorney, at (571)272-3207.

Nancy Johnson
Senior Petitions Attorney
Office of Petitions

SPE RESPONSE FOR CERTIFICATE OF CORRECTION

Paper No.: _____

DATE : 3/11/09

TO SPE OF : ART UNIT 2112

SUBJECT : Request for Certificate of Correction for Appl. No.: 10617100 Patent No.: 7478309 B2

Please respond to this request for a certificate of correction within 7 days.

FOR IFW FILES:

Please review the requested changes/corrections as shown in the **COCIN** document(s) in the IFW application image. No new matter should be introduced, nor should the scope or meaning of the claims be changed.

Please complete the response (see below) and forward the completed response to scanning using document code **COCX**.

FOR PAPER FILES:

Please review the requested changes/corrections as shown in the attached certificate of correction. Please complete this form (see below) and forward it with the file to:

Certificates of Correction Branch (CofC)
South Tower - 9A22
Palm Location 7580
You can fax the Directors/SPE response to 571-270-9990

LAMONTE NEWSOME
Certificates of Correction Branch
703-308-9390 ext. 112

Thank You For Your Assistance

The request for issuing the above-identified correction(s) is hereby:
Note your decision on the appropriate box.

- ☒ **Approved** — **All** changes apply.
- ☐ **Approved in Part** — Specify below which changes **do not** apply.
- ☐ **Denied** — State the reasons for denial below.

Comments: _____

3/11/09

5662

UNITED STATES PATENT AND TRADEMARK OFFICE

COMMISSIONER FOR PATENTS
UNITED STATES PATENT AND TRADEMARK OFFICE
P.O. BOX 1450
ALEXANDRIA, VA 22313-1450
WWW.USPTO.GOV

Paper No. None

PERMAN & GREEN
425 POST ROAD
FAIRFIELD CT 06824

COPY MAILED

JAN 13 2004

OFFICE OF PETITIONS

In re Application of
David Chown
Application No. 10/617,113
Filed: July 10, 2003
Attorney Docket No. 871-011413-US/30020606 US
Title: OPTOELECTRONIC MODULE WITH INTEGRATED LOOP-BACK CAPABILITY

DECISION ON PETITION UNDER 37 C.F.R. §1.47(b)

This is in response to the petition under 37 CFR §1.47(b)[1], filed September 8, 2003.

The above-identified application was filed on July 10, 2003. On September 8, 2003, applicant filed the instant petition (and fee), the surcharge associated with the late filing of an oath or declaration[2], and a declaration executed by an officer of the purported assignee. Accompanying the petition was a statement from the petitioner, a declaration of facts, copies of two letters, an employment agreement, and an invention disclosure form.

Petitioner has met requirements (1) – (3) and (6) above.

Regarding the fourth requirement above, Petitioner has not submitted adequate proof that diligent efforts have been made to locate the non-signing inventor. *As petitioner has set forth that the non-signing joint inventor cannot be found or reached, petitioner is required to establish that a diligent effort was made to locate the non-signing inventor.* There is no indication that Rule 47 applicant attempted to verify non-signing inventor Chown's address or to determine his

1 A grantable petition under 37 CFR §1.47(b) requires:
(1) The petition fee;
(2) a surcharge if the petition was not filed at the time of filing of the application;
(3) a statement of the last known address of each of the non-signing inventors;
(4) proof that diligent efforts have been made to locate the non-signing inventor
(5) proof that the Rule 47(b) applicant has sufficient proprietary interest in the subject matter to justify the filing of the application;
(6) proof of irreparable damage, and;
(7) an acceptable oath or declaration in compliance with 35 U.S.C. §§ 115 and 116 and 37 CFR §1.63.

2 The surcharge has been charged to petitioner's Deposit Account, as authorized in the petition.

forwarding address and to send the application papers to that address for consideration by the inventor[3].

Petitioner has not submitted adequate proof that diligent efforts have been made to locate the non-signing inventors. Petitioner has made no effort to try to locate the inventor. No mention is made as to any search done for the non-signing inventor. If attempts to obtain a forwarding address or to locate the non-signing inventor by other means such as through E-mail, telephone, or the Internet fail, then applicant will have provided the necessary proof required under 37 C.F.R. §1.47 that the inventor cannot be reached. Details of the efforts to locate the non-signing inventor should be set forth in an affidavit or declaration of facts by a person with first hand knowledge of the details.

Applicant should submit documentary evidence such as the results of an E-mail or Internet search. It is important that the statement contain facts as opposed to conclusions[4].

Regarding the fifth requirement above, petitioner has not established that that the Rule 47(b) applicant has sufficient proprietary interest in the subject matter to justify the filing of the application. Although an invention disclosure form and an employment agreement have been submitted, it is noted that the former is not executed. As for the later, the agreement specifically limits the scope of the intellectual property to that which arises out of "work carried out during the course of my employment[5]" and "ideas or work products produced by me during the course of my Agilent Technologies employment[6]." Petitioner has not established that the instant invention arose out of work carried out during the course of the non-signing joint inventor's employment.

Regarding the seventh requirement above, the declaration has been executed by "Dr. James Lenney," with the title of "Legal Department, Agilent Technologies UK Limited." With this, the rule 47(b) applicant has attempted to make the required oath or declaration. The declaration must state the relationship of the person, making the oath or declaration, to the inventor, and upon information and belief, the facts which the inventor is required to state. Where a corporation is the 47(b) applicant, an officer thereof should normally sign the necessary oath or declaration. Regardless, the title or position of the person signing must be stated. As such, Dr. James Lenney should give his title or position, as he is signing on behalf of a corporation[7].

As such, the petition under 37 C.F.R. §1.47(b) is **DISMISSED**.

Rule 47 applicant is given **TWO MONTHS** from the mailing date of this decision to reply, correcting the below-noted deficiencies. Any reply should be entitled "Request for Reconsideration of Petition Under 37 C.F.R. §1.47(b)," and should only address the deficiencies noted below, except that the reply may include an oath or declaration executed by the non-signing inventor. **Failure to respond will result in abandonment of the application**. Any extensions of time will be governed by 37 C.F.R. §1.136(a).

---

3 See MPEP 409.03(d).
4 See MPEP 409.03(d).
5 Confidentiality Agreement, "Ownership of Rights" subsection.
6 Confidentiality Agreement, "Exploitation" subsection.
7 See 409.03(b).

On renewed petition, the petitioner should provide proof of either a diligent search or that the non-signing inventor refused to cooperate after having been provided with a complete copy of the application, reveal the last known address of the non-signing inventor, a declaration that has been properly executed by a corporate officer, and either a copy of the employment agreement or an assignment document or a legal memorandum signed by an attorney familiar with the law of the jurisdiction stating that a court of competent jurisdiction would, by the weight of the authority, award title to the invention to the Rule 47(b) applicant.

The reply to this letter may be submitted by mail[8], hand-delivery[9], or facsimile[10].

The application file will be retained in the Office of Petitions for two (2) months.

Telephone inquiries regarding *this decision* should be directed to the undersigned at (703) 305-0011.

Paul Shanoski
Attorney
Office of Petitions
United States Patent and Trademark Office

8 Mail Stop Petition, Commissioner for Patents, United States Patent and Trademark Office, P.O. Box 1450, Alexandria, VA, 22313-1450.
9 Customer Window, Mail Stop Petition, Crystal Plaza Two, Lobby, Room 1B03, Arlington, Virginia 22202
10 (703) 872-9306.

UNITED STATES PATENT AND TRADEMARK OFFICE

Commissioner for Patents
United States Patent and Trademark Office
P.O. Box 1450
Alexandria, VA 22313-1450
www.uspto.gov

STEVEN H ARTERBERRY ESQ
DORSEY & WHITNEY LLP
1420 FIFTH AVE
SUITE 3400
SEATTLE WA 98101

COPY MAILED
MAR 30 2006
OFFICE OF PETITIONS

In re Application of
Mace, et al. :
Application No. 10/617,124 : DECISION ON
Filed: July 9, 2003 : PETITION
Attorney Docket No. 501329.01 :

This is in response to the petition to withdraw the holding of abandonment under 37 CFR 1.181, filed March 6, 2006.

The petition under 37 CFR 1.181 is **GRANTED**.

The holding of abandonment is **WITHDRAWN**.

The above-identified application was held abandoned for failure to timely file a reply to the non-final Office action mailed July 20, 2005. No response having been received, the above-identified application became abandoned on October 21, 2005. A Notice of Abandonment was mailed on January 27, 2006.

Petitioner has supplied a copy of an Amendment, bearing a Certificate of Transmission under 37 CFR 1.8 dated January 19, 2006. In addition, a review of Office records reveals that the Office previously received the fee for a three month extension of time.

In view of the above, the holding of abandonment is withdrawn.

Given the basis for granting this petition, no petition fee was required.

The application file is being forwarded to Group Art Unit 3644 for consideration of the Amendment filed January 23, 2006, a copy of which has been supplied with the instant petition.

Telephone inquiries related to this decision should be directed to the undersigned at 571-272-3207.

Cliff Congo
Petitions Attorney
Office of Petitions

UNITED STATES PATENT AND TRADEMARK OFFICE

Commissioner for Patents
United States Patent and Trademark Office
P.O. Box 1450
Alexandria, VA 22313-1450
www.uspto.gov

PATE PIERCE & BAIRD
215 SOUTH STATE STREET, SUITE 550
PARKSIDE TOWER
SALT LAKE CITY, UT 84111

COPY MAILED

MAR 2 9 2007

OFFICE OF PETITIONS

In re Patent No. 6,874,726	:	DECISION GRANTING PETITION
Issue Date: April 5, 2005	:	UNDER 37 CFR 1.78(a)(3) AND
Application No. 10/617,126	:	REQUEST FOR CERTIFICATE
Filed: July 10, 2003	:	OF CORRECTION
Attorney Docket No. 2409.2.1.4	:	

This is a decision in response to the corrected petition, filed March 27, 2007, which is being treated as a petition under 37 CFR 1.78(a)(3), seeking to add a claim for priority under 35 U.S.C. § 120 to nonprovisional Application Nos. 09/434,609, filed November 5, 1999 and 09/023,318, filed February 13, 1998, by way of a certificate of correction. The original petition was filed November 6, 2006.

The petition is **granted**.

A review of the file record fails to disclose that a claim for the benefit of priority to the above-noted, prior-filed nonprovisional applications was made within the time period set forth in 37 CFR 1.78(a)(2)(ii) and further failed to include a proper reference to the prior-filed applications as required by 37 CFR 1.78(a)(2)(i) and 1.78(a)(2)(iii).

The instant application was filed July 10, 2003. Therefore, since this application was filed after November 29, 2000, a petition under 37 CFR 1.78(a)(3), along with submission of a Certificate of Correction, is the appropriate avenue of relief to accept a late claim for the benefit of priority to a prior-filed nonprovisional application after issuance of the application into a patent. *See* MPEP 1481.

A petition for acceptance of a claim for late priority under 37 CFR 1.78(a)(3) must be accompanied by:

(1) the reference required by 35 U.S.C. § 120 and 37 CFR 1.78(a)(2)(i) of the prior-filed application, unless previously submitted;

(2) the surcharge set forth in § 1.17(t); and

(3) a statement that the entire delay between the date the claim was due under 37 CFR 1.78(a)(2)(ii) and the date the claim was filed was unintentional. The Director may require additional information where there is a question whether the delay was unintentional.

As the petition for acceptance of an unintentionally delayed claim for the benefit of priority under 35 U.S.C. § 120 to the above-noted, prior-filed nonprovisional applications satisfies the conditions of 37 CFR 1.78(a)(3), the petition is granted.

A corrected Filing Receipt, which includes the priority claim to the above-noted, prior-filed nonprovisional applications, accompanies this decision on petition.

Petitioner is advised that the granting of this petition and the mailing of a corrected Filing Receipt should not be viewed as an indication that a determination has been made that this application is entitled to claim benefit of the prior-filed applications. A determination that applicant is entitled to claim benefit of the prior-filed application will be made by the Examiner prior to the mailing of a certificate of correction.

Any inquiries concerning this decision may be directed to Sherry Brinkley at (571) 272-3204.

This application is being referred to the Certificates of Correction Branch for processing the request for a certificate of correction in accordance with this decision on the petition under 37 CFR 1.78(a)(3).

Sherry D. Brinkley
Petitions Examiner
Office of Petitions

Frances M. Hicks
Lead, Petitions Examiner
Office of Petitions

Attachment: Corrected Filing Receipt

UNITED STATES PATENT AND TRADEMARK OFFICE

UNITED STATES DEPARTMENT OF COMMERCE
United States Patent and Trademark Office
Address: COMMISSIONER FOR PATENTS
P.O. Box 1450
Alexandria, Virginia 22313-1450
www.uspto.gov

APPL NO.	FILING OR 371(c) DATE	ART UNIT	FIL FEE REC'D	ATTY.DOCKET NO	TOT CLMS	IND CLMS
10/617,126	07/10/2003	3654	905	2409.2.1.4	20	3

CONFIRMATION NO. 2948
CORRECTED FILING RECEIPT
OC000000023135313
OC000000023135313

28049
PATE PIERCE & BAIRD
215 SOUTH STATE STREET, SUITE 550
PARKSIDE TOWER
SALT LAKE CITY, UT 84111

Date Mailed: 03/27/2007

Receipt is acknowledged of this regular Patent Application. It will be considered in its order and you will be notified as to the results of the examination. Be sure to provide the U.S. APPLICATION NUMBER, FILING DATE, NAME OF APPLICANT, and TITLE OF INVENTION when inquiring about this application. Fees transmitted by check or draft are subject to collection. Please verify the accuracy of the data presented on this receipt. **If an error is noted on this Filing Receipt, please mail to the Commissioner for Patents P.O. Box 1450 Alexandria Va 22313-1450. Please provide a copy of this Filing Receipt with the changes noted thereon. If you received a "Notice to File Missing Parts" for this application, please submit any corrections to this Filing Receipt with your reply to the Notice. When the USPTO processes the reply to the Notice, the USPTO will generate another Filing Receipt incorporating the requested corrections (if appropriate).**

Applicant(s)

C. Robert Ripplinger, Millville, UT;

Power of Attorney:

A Pate--36234
Gary Pierce--38019
Hal Baird--42284

Domestic Priority data as claimed by applicant

This application is a CON of 09/774,389 01/29/2001 PAT 6,598,825
which is a CIP of 09/434,609 11/05/1999 PAT 6,179,245
which is a DIV of 09/023,318 02/13/1998 PAT 6,003,807

Foreign Applications

If Required, Foreign Filing License Granted: 10/08/2003

The country code and number of your priority application, to be used for filing abroad under the Paris Convention, is
US10/617,126

Projected Publication Date: Not Applicable

Non-Publication Request: No

Early Publication Request: No

**** SMALL ENTITY ****

Title

CORRUGATED-CORE FLANGES FOR SPOOLS AND REELS

Preliminary Class

242

PROTECTING YOUR INVENTION OUTSIDE THE UNITED STATES

Since the rights granted by a U.S. patent extend only throughout the territory of the United States and have no effect in a foreign country, an inventor who wishes patent protection in another country must apply for a patent in a specific country or in regional patent offices. Applicants may wish to consider the filing of an international application under the Patent Cooperation Treaty (PCT). An international (PCT) application generally has the same effect as a regular national patent application in each PCT-member country. The PCT process **simplifies** the filing of patent applications on the same invention in member countries, but **does not result** in a grant of "an international patent" and does not eliminate the need of applicants to file additional documents and fees in countries where patent protection is desired.

Almost every country has its own patent law, and a person desiring a patent in a particular country must make an application for patent in that country in accordance with its particular laws. Since the laws of many countries differ in various respects from the patent law of the United States, applicants are advised to seek guidance from specific foreign countries to ensure that patent rights are not lost prematurely.

Applicants also are advised that in the case of inventions made in the United States, the Director of the USPTO must issue a license before applicants can apply for a patent in a foreign country. The filing of a U.S. patent application serves as a request for a foreign filing license. The application's filing receipt contains further information and guidance as to the status of applicant's license for foreign filing.

Applicants may wish to consult the USPTO booklet, "General Information Concerning Patents" (specifically, the section entitled "Treaties and Foreign Patents") for more information on timeframes and deadlines for filing foreign patent applications. The guide is available either by contacting the USPTO Contact Center at 800-786-9199, or it can be viewed on the USPTO website at http://www.uspto.gov/web/offices/pac/doc/general/index.html.

For information on preventing theft of your intellectual property (patents, trademarks and copyrights), you may wish to consult the U.S. Government website, http://www.stopfakes.gov. Part of a Department of Commerce initiative, this website includes self-help "toolkits" giving innovators guidance on how to protect intellectual property in specific countries such as China, Korea and Mexico. For questions regarding patent enforcement issues, applicants may call the U.S. Government hotline at 1-866-999-HALT (1-866-999-4158).

LICENSE FOR FOREIGN FILING UNDER
Title 35, United States Code, Section 184
Title 37, Code of Federal Regulations, 5.11 & 5.15

GRANTED

The applicant has been granted a license under 35 U.S.C. 184, if the phrase "IF REQUIRED, FOREIGN FILING LICENSE GRANTED" followed by a date appears on this form. Such licenses are issued in all applications where the conditions for issuance of a license have been met, regardless of whether or not a license may be required as set forth in 37 CFR 5.15. The scope and limitations of this license are set forth in 37 CFR 5.15(a) unless an earlier license has been issued under 37 CFR 5.15 (b). The license is subject to revocation upon written notification. The date indicated is the effective date of the license, unless an earlier license of similar scope has been granted under 37 CFR 5.13 or 5.14.

This license is to be retained by the licensee and may be used at any time on or after the effective date thereof unless it is revoked. This license is automatically transferred to any related applications(s) filed under 37 CFR 1.53(d). This license is not retroactive.

The grant of a license does not in any way lessen the responsibility of a licensee for the security of the subject matter as imposed

by any Government contract or the provisions of existing laws relating to espionage and the national security or the export of technical data. Licensees should apprise themselves of current regulations especially with respect to certain countries, of other agencies, particularly the Office of Defense Trade Controls, Department of State (with respect to Arms, Munitions and Implements of War (22 CFR 121-128)); the Bureau of Industry and Security, Department of Commerce (15 CFR parts 730-774); the Office of Foreign Assets Control, Department of Treasury (31 CFR Parts 500+) and the Department of Energy.

NOT GRANTED

No license under 35 U.S.C. 184 has been granted at this time, if the phrase "IF REQUIRED, FOREIGN FILING LICENSE GRANTED" DOES NOT appear on this form. Applicant may still petition for a license under 37 CFR 5.12, if a license is desired before the expiration of 6 months from the filing date of the application. If 6 months has lapsed from the filing date of this application and the licensee has not received any indication of a secrecy order under 35 U.S.C. 181, the licensee may foreign file the application pursuant to 37 CFR 5.15(b).

UNITED STATES PATENT AND TRADEMARK OFFICE

Commissioner for Patents
United States Patent and Trademark Office
P.O. Box 1450
Alexandria, VA 22313-1450
www.uspto.gov

WADDEY & PATTERSON, P.C.
1600 DIVISION STREET, SUITE 500
NASHVILLE TN 37203

COPY MAILED

MAR 3 1 2008

In re Application of	:	
JUSZKIEWICZ, Henry E.	:	
Application No. 10/617,136	:	DECISION ON PETITION
Filed: July 10, 2003	:	TO WITHDRAW
Attorney Docket No. **N9357**	:	FROM RECORD
	:	

This is a decision on the Request to Withdraw as attorney or agent of record under 37 C.F.R. § 1.36(b), filed March 17, 2008.

The request is **APPROVED**.

A grantable request to withdraw as attorney/agent of record must be signed by every attorney/agent seeking to withdraw or contain a clear indication that one attorney is signing on behalf of another/others. A request to withdraw will not be approved unless at least 30 (thirty) days would remain between the date of approval and the later of the expiration date of a time to file a response or the expiration date of the maximum time period which can be extended under 37 C.F.R. § 1.136(a).

The request was signed by Lucian Beavers on behalf of all attorneys of record who are associated with customer No. 23456. All attorneys/agents associated with the Customer Number 23456 have been withdrawn. Applicant is reminded that there is no attorney of record at this time.

The request to change the correspondence of record is not acceptable as the requested correspondence address is not that of: (1) the first named signing inventor; or (2) an intervening assignee of the entire interest under 37 C.F.R 3.71. All future communications from the Office will be directed to the signing inventor at the first copied address below until otherwise properly notified by the applicant.

Telephone inquiries concerning this decision should be directed to Tredelle Jackson at 571-272-2783.

Tredelle D. Jackson
Petitions Examiner
Office of Petitions

cc: **HENRY E. JUSZKIEWICZ**
309 PLUS PARK BLVD.
NASHVILLE, TN 37217

cc: **MATTHEW W. SIEGAL**
STROOCK & STROOCK & LAVAN LLP
180 MAIDEN LANE
NEW YORK, NY 10038

UNITED STATES PATENT AND TRADEMARK OFFICE

COMMISSIONER FOR PATENTS
UNITED STATES PATENT AND TRADEMARK OFFICE
P.O. BOX 1450
ALEXANDRIA, VA 22313-1450
www.uspto.gov

JOHN S. PRATT, ESQ
KILPATRICK STOCKTON, LLP
1100 PEACHTREE STREET
ATLANTA, GA 30309

COPY MAILED

AUG 0 4 2004

OFFICE OF PETITIONS

In re Application of :
Robert John D'Amato, et al. :
Application No. 10/617,150 :
Filed: July 10, 2003 :
Attorney Docket No. 05213-0924 (43170-287649) :

ON PETITION

This is a decision on the petition under 37 CFR 1.313, filed August 2, 2004, requesting that the above-identified application be withdrawn from issue.

The petition is dismissed as moot.

Petitioner requested that the application be withdrawn from issue to permit consideration of an information disclosure statement filed in a request for continued examination (RCE). Since the RCE was filed within the period set for paying the issue fee, as required by the Notice of Allowance and Issue Fee Due mailed July 17, 2004, prosecution is reopened in the present application. Accordingly, no petition under 37 CFR 1.313 is necessary.

The application is being referred to Technology Center AU 1621 for further processing of the RCE under 37 CFR 1.114.

Telephone inquiries should be directed to the undersigned at (703) 305-9220.

Sherry D. Brinkley
Petitions Examiner
Office of Petitions
Office of the Deputy Commissioner
for Patent Examination Policy

UNITED STATES PATENT AND TRADEMARK OFFICE

Commissioner for Patents
United States Patent and Trademark Office
P.O. Box 1450
Alexandria, VA 22313-1450
www.uspto.gov

COPY MAILED

AUG 3 0 2005

OFFICE OF PETITIONS

ADRIAN CALDERONE
DILWORTH & BARRESE, LLP
333 EARLE OVINGTON BLVD.
UNIONDALE, NY 11553

In re Application of JOSHI Application No. 10/617,165 Filed: July 8, 2003 Attorney Docket No. 1302-49	: : : : :	DECISION ON PETITION

This is a decision on the petition under 37 CFR 1.137(b), filed July 14, 2005, to revive the above-identified application.

The petition is **GRANTED**.

The above-identified application became abandoned for failure to reply in a timely manner to a Notice to File Missing Parts of Nonprovisional Application mailed October 3, 2003, which set a period for reply of two (2) months. No extensions of time under the provisions of 37 CFR 1.136(a) were obtained. Accordingly, the application became abandoned on December 4, 2003.

The petition satisfies the conditions for revival pursuant to the provisions of 37 CFR 1.137(b) in that (1) the reply in the form of a properly executed declaration and the late declaration surcharge fee of $130; (2) the petition fee of $1500; and (3) the required statement of unintentional delay have been received. Accordingly, the reply to the Notice to File Missing Parts of Nonprovisional Application of October 3, 2003 is accepted as having been unintentionally delayed.

It is not apparent whether the person signing the statement of unintentional delay was in a position to have firsthand or direct knowledge of the facts and circumstances of the delay at issue. Nevertheless, such statement is being treated as having been made as the result of a reasonable inquiry into the facts and circumstances of such delay. See 37 CFR 10.18(b) and Changes to Patent Practice and Procedure; Final Rule Notice, 62 Fed. Reg. 53131, 53178 (October 10, 1997), 1203 Off. Gaz. Pat. Office 63, 103 (October 21, 1997). In the event that such an inquiry has not been made, petitioner must make such an inquiry. If such inquiry results in the discovery that it is not correct that the entire delay in filing the required reply from the due date for the reply until the filing of a grantable petition pursuant to 37 CFR 1.137(b) was unintentional, petitioner must notify the Office.

The power attorney combined with declaration is considerable acceptable. 37 CFR 1.32(c) states "[a] power of attorney may only name as representative: (1) One or more joint inventors (§ 1.45); (2) Those registered patent practitioners associated with a Customer Number; (3) Ten or fewer registered patent attorneys or registered patent agents[.]" While the power of attorney lists more than ten patent attorneys or registered patent agents and does not comply with 37 CFR 1.32(c)(3), the power of attorney also includes a Customer Number, which complies with 37 CFR 1.32(c)(2). As such, the patent practitioners associated with Customer Number 28239 are being made of record.

Telephone inquiries concerning this decision should be directed to Denise Pothier at (571) 272-4787.

The application matter is being forwarded to Office of Initial Patent Examination.

Frances Hicks

Frances Hicks
Petitions Examiner
Office of Petitions

Application No. (if known): 10/617,168

Attorney Docket No.: 04558/038002

Certificate of Express Mailing Under 37 CFR 1.10

I hereby certify that this correspondence is being deposited with the United States Postal Service as Express Mail, Airbill No. EV 562271126 US in an envelope addressed to:

MS Post Issue
Commissioner for Patents
P.O. Box 1450
Alexandria, VA 22313-1450

on March 17, 2005
Date

Lisa H. Smith
Signature

Lisa H. Smith
Typed or printed name of person signing Certificate

Registration Number, if applicable

(713) 228-8600
Telephone Number

Note: Each paper must have its own certificate of mailing, or this certificate must identify each submitted paper.

Request for Certificate of Correction (No Fee) (2 pages)
Certificate of Correction

93617

Ok to be entered
KH
8/12/07

UNITED STATES PATENT AND TRADEMARK OFFICE
CERTIFICATE OF CORRECTION

PATENT NO. : 6,819,647

DATED : November 16, 2004

INVENTOR(S) : Youichi Saitoh et al.

It is certified that error appears in the above-identified patent and that said Letters Patent is hereby corrected as shown below:

In Claim 4, column 2, line 8, please replace the word "omitted" with --emitted--.

In Claim 4, column 2, line 13, please add the following sentence: --first photodetectors for receiving light separated by the separation element;--

In Claim 3, column 2, line 1, please replace the mathematical equation "$(N1+ \frac{1}{4}) \lambda 1 \approx N2 \times \lambda 2$" with --$(N1+ \frac{1}{4}) \lambda 1 \doteqdot N2 \times \lambda 2$--.

In Claim 6, column 2, line 41, please replace the mathematical equation "$(N1 + 1/5) \approx N2 \times \lambda 2$" with --$(N1 + 1/5) \lambda 1 \doteqdot N2 \times \lambda 2$--.

93617

MAR 2 2 2005

SPE RESPONSE FOR CERTIFICATE OF CORRECTION

Paper No.: X

DATE : APRIL 28, 2005

TO SPE OF : ART UNIT 2655

SUBJECT : Request for Certificate of Correction for Appl. No.: 10617168 Patent No.: 6819647B2

A response is requested with respect to a request for a certificate of correction.

With respect to the change(s) requested to correct Office and/or Applicant's errors, should the patent read as shown in the certificate of correction attached herewith or the COCIN document(s), in IFW images for the above-identified patented application? No new matter should be introduced, nor should the scope or meaning of the claims be changed.

If the response is for an IFW, within 7 days, please complete and forward the response, to the employee (named below) via scanning into application images, using document code COCX.

DO NOT SENT TO ATTORNEY

If the response is for a paper file wrapper, please complete the response and forward the response with the paper file wrapper, to the employee (named below), within 7 days, to:

Certificates of Correction Branch (CofC)
South Tower - 9A22
Palm Location 7580

VIRGINIA TOLBERT
Certificates of Correction Branch
703-308-9390 ext. 113

Thank You For Your Assistance

The request for issuing the above-identified correction(s) is hereby:
Note your decision on the appropriate box.

- [x] **Approved** — **All** changes apply.
- [ ] **Approved in Part** — Specify below which changes **do not** apply.
- [ ] **Denied** — State the reasons for denial below.

Comments: The amendment (corrections) to the claims are approved by the examiner.

SPE **Art Unit**

UNITED STATES PATENT AND TRADEMARK OFFICE

COMMISSIONER FOR PATENTS
UNITED STATES PATENT AND TRADEMARK OFFICE
P.O. BOX 1450
ALEXANDRIA, VA 22313-1450
www.uspto.gov

KENYON & KENYON
Suite 600
333 W. San Carlos Street
San Jose CA, 95110-2711

COPY MAILED

OCT 06 2004

OFFICE OF PETITIONS

In re Application of Zalewski, et al. Application No. 10/617,203 Filed: July 8, 2003 Attorney Docket No.: 12745/4	:	DECISION GRANTING PETITION UNDER 37 CFR 1.137(f)

This decision is in response to the petition under 37 CFR 1.137(f), filed August 30, 2004.

The petition is hereby **GRANTED**.

Petitioners state that the instant nonprovisional application is the subject of an application (PCT /US04/21520) filed July 1, 2004 in a foreign country, or under a multinational treaty, that requires publication of applications eighteen months after filing. Petitioners' further state that petitioners unintentionally failed to notify the Office of this filing within 45 days of the filing of the subject application in a foreign country.

Hence, the application became abandoned pursuant to 35 USC 122(b)(2)(B)(iii) and 37 CFR 1.213(c) for failure to timely notify the Office of the filing of an application in a foreign country, or under a multilateral international agreement that requires publication of applications 18 months after filing.

A grantable petition under 37 CFR 1.137(f) must be accompanied by: (1) the reply; (2) the petition fee; (3) a statement that the entire delay in filing the required reply from the due date of the reply until the filing of a grantable petition was unintentional; and (4) any terminal disclaimer (and fee as set forth in § 1.20(d)) required pursuant to 37 CFR 1.137(d).

The instant petition has been reviewed and found to be in compliance with the provisions of 37 CFR 1.137(f). Accordingly, the failure to timely notify the Office of a foreign or international filing within 45 days after the date of filing of

such foreign or international application as provided by 35 USC 122(b)(2)(B)(iii) and 37 CFR 1.213(c) is accepted as having been unintentionally delayed.

The previous Request and Certification under 35 USC 122(b)(2)(B)(i) has been rescinded. A Notice Regarding Rescission of Nonpublication Request setting forth the projected publication date of the instant application was previously mailed September 9, 2004.

This application is being forwarded to Technology Center 2100 for further processing.

Telephone inquiries related to this decision may be directed to the undersigned at (703) 305-0310.

Alesia M. Brown
Senior Petitions Attorney
Office of Petitions

PTO/SB/66 (03-09)
Approved for use through 03/31/2012. OMB 0651-0016
U.S. Patent and Trademark Office: U.S. DEPARTMENT OF COMMERCE
Under the Paperwork Reduction Act of 1995, no persons are required to respond to a collection of information unless it displays valid OMB control number.

PETITION TO ACCEPT UNINTENTIONALLY DELAYED PAYMENT OF MAINTENANCE FEE IN AN EXPIRED PATENT (37 CFR 1.378(c))

Patent Number	Issue Date (YYYY-MM-DD)	Application Number	Filing Date (YYYY-MM-DD)	Docket Number (if applicable)
6908258	2005-06-21	10617206	2003-07-11	2043.100.US

CAUTION: Maintenance fee (and surcharge, if any) payment must correctly identify: (1) the patent number and (2) the application number of the actual U.S. application leading to issuance of that patent to ensure the fee(s) is/are associated with the correct patent. 37 CFR 1.366(c) and (d).

SMALL ENTITY
☒ Patentee claims, or has previously claimed, small entity status. See 37 CFR 1.27.

LOSS OF ENTITLEMENT TO SMALL ENTITY STATUS
☐ Patentee is no longer entitled to small entity status. See 37 CFR 1.27(g)

NOT Small Entity		Small Entity	
Fee	Code	Fee	Code
○ 3 ½ year	(1551)	◉ 3 ½ year	(2551)
○ 7 ½ year	(1552)	○ 7 ½ year	(2552)
○ 11 ½ year	(1553)	○ 11 ½ year	(2553)

SURCHARGE
The surcharge required by 37 CFR 1.20(i)(2) (Fee Code 1558) must be paid as a condition of accepting unintentionally delayed payment of the maintenance fee.

MAINTENANCE FEE (37 CFR 1.20(e)-(g))
The appropriate maintenance fee must be submitted with this petition.

STATEMENT
THE UNDERSIGNED CERTIFIES THAT THE DELAY IN PAYMENT OF THE MAINTENANCE FEE TO THIS PATENT WAS UNINTENTIONAL

PETITIONER(S) REQUEST THAT THE DELAYED PAYMENT OF THE MAINTENANCE FEE BE ACCEPTED AND THE PATENT REINSTATED

THIS PORTION MUST BE COMPLETED BY THE SIGNATORY OR SIGNATORIES

37 CFR 1.378(d) states: "Any petition under this section must be signed by an attorney or agent registered to practice before the Patent and Trademark Office, or by the patentee, the assignee, or other party in interest."

I certify, in accordance with 37 CFR 1.4(d)(4) that I am

◉ An attorney or agent registered to practice before the Patent and Trademark Office

○ A sole patentee

○ A joint patentee; I certify that I am authorized to sign this submission on behalf of all the other patentees.

○ A joint patentee; all of whom are signing this e-petition

○ The assignee of record of the entire interest

Patent Practitioner			
A signature of the applicant or representative is required in accordance with 37 CFR 1.33 and 10.18. Please see 37 CFR 1.4(d) for the form of the signature			
Signature	/robert h epstein/	Date (YYYY-MM-DD)	2009-08-06
Name	Robert H. Epstein	Registration Number	24353

This collection of information is required by 37 CFR 1.378(c). The information is required to obtain or retain a benefit by the public which is to file (and by the USPTO to process) an application. Confidentiality is governed by 35 U.S.C. 122 and 37 CFR 1.11 and 1.14. This collection is estimated to take 1 hour to complete, including gathering, preparing, and submitting the completed application form to the USPTO. Time will vary depending upon the individual case. Any comments on the amount of time you require to complete this form and/ or suggestions for reducing this burden, should be sent to the Chief Information Officer, U.S. Patent and Trademark Office, U.S. Department of Commerce, P.O. Box 1450, Alexandria, VA 22313-1450. DO NOT SEND FEES OR COMPLETED FORMS TO THIS ADDRESS. **This form can only be used when in conjunction with EFS-Web. If this form is mailed to the USPTO, it may cause delays in reinstating the patent.**

Privacy Act Statement

The Privacy Act of 1974 (P.L. 93-579) requires that you be given certain information in connection with your submission of the attached form related to a patent application or patent. Accordingly, pursuant to the requirements of the Act, please be advised that: (1) the general authority for the collection of this information is 35 U.S.C. 2(b)(2); (2) furnishing of the information solicited is voluntary; and (3) the principal purpose for which the information is used by the U.S. Patent and Trademark Office is to process and/or examine your submission related to a patent application or patent. If you do not furnish the requested information, the U.S. Patent and Trademark Office may not be able to process and/or examine your submission, which may result in termination of proceedings or abandonment of the application or expiration of the patent.

The information provided by you in this form will be subject to the following routine uses:

1. The information on this form will be treated confidentially to the extent allowed under the Freedom of Information Act (5 U.S.C. 552) and the Privacy Act (5 U.S.C. 552a). Records from this system of records may be disclosed to the Department of Justice to determine whether the Freedom of Information Act requires disclosure of these records.

2. A record from this system of records may be disclosed, as a routine use, in the course of presenting evidence to a court, magistrate, or administrative tribunal, including disclosures to opposing counsel in the course of settlement negotiations.

3. A record in this system of records may be disclosed, as a routine use, to a Member of Congress submitting a request involving an individual, to whom the record pertains, when the individual has requested assistance from the Member with respect to the subject matter of the record.

4. A record in this system of records may be disclosed, as a routine use, to a contractor of the Agency having need for the information in order to perform a contract. Recipients of information shall be required to comply with the requirements of the Privacy Act of 1974, as amended, pursuant to 5 U.S.C. 552a(m).

5. A record related to an International Application filed under the Patent Cooperation Treaty in this system of records may be disclosed, as a routine use, to the International Bureau of the World Intellectual Property Organization, pursuant to the Patent Cooperation Treaty.

6. A record in this system of records may be disclosed, as a routine use, to another federal agency for purposes of National Security review (35 U.S.C. 181) and for review pursuant to the Atomic Energy Act (42 U.S.C. 218(c)).

7. A record from this system of records may be disclosed, as a routine use, to the Administrator, General Services, or his/her designee, during an inspection of records conducted by GSA as part of that agency's responsibility to recommend improvements in records management practices and programs, under authority of 44 U.S.C. 2904 and 2906. Such disclosure shall be made in accordance with the GSA regulations governing inspection of records for this purpose, and any other relevant (i.e., GSA or Commerce) directive. Such disclosure shall not be used to make determinations about individuals.

8. A record from this system of records may be disclosed, as a routine use, to the public after either publication of the application pursuant to 35 U.S.C. 122(b) or issuance of a patent pursuant to 35 U.S.C. 151. Further, a record may be disclosed, subject to the limitations of 37 CFR 1.14, as a routine use, to the public if the record was filed in an application which became abandoned or in which the proceedings were terminated and which application is referenced by either a published application, an application open to public inspections or an issued patent.

9. A record from this system of records may be disclosed, as a routine use, to a Federal, State, or local law enforcement agency, if the USPTO becomes aware of a violation or potential violation of law or regulation.

UNITED STATES PATENT AND TRADEMARK OFFICE

Commissioner for Patents
United States Patent and Trademark Office
P.O. Box 1450
Alexandria, VA 22313-1450
www.uspto.gov

In re Patent No. 6908258
Issue Date: June 21,2005
Application No. 10617206
Filed: July 11,2003
Attorney Docket No. 2043.100-US

:DECISION GRANTING PETITION
:UNDER 37 CFR 1.378(c)

This is a decision on the electronic petition, filed August 13,2009 ,under 37 CFR 1.378(c) to accept the unintentionally delayed payment of the 3.5 year maintenance fee for the above-identified patent.

The petition is **GRANTED**.

The maintenance fee is accepted, and the above-identified patent reinstated as of August 13,2009 . This decision also constitutes notice that the fee has been accepted. An electronic copy of the petition and this decision has been created as an entry in the Image File Wrapper. Nevertheless, petitioner should print and retain an independent copy.

Telephone inquiries related to this electronic decision should be directed to the Electronic Business Center at 1-866-217-9197.

UNITED STATES PATENT AND TRADEMARK OFFICE

OCT 19 2005

Commissioner for Patents
United States Patent and Trademark Office
P.O. Box 1450
Alexandria, VA 22313-1450
www.uspto.gov

LOUIS J BACHAND
P O BOX 1508
LA CANADA CA 91012-5508

In re Application of
Don Tabor
Application No. 10/617,220
Filed: July 10, 2003

DECISION ON PETITION TO WITHDRAW THE HOLDING OF ABANDONMENT

For: PROPELLER SYSTEM FOR KITE

This is a decision on Applicant's petition to withdraw the holding of abandonment, filed in the United States Patent and Trademark Office (USPTO) on July 22, 2005.

The petition is **GRANTED**.

A review of the file record reveals that a Final Rejection (herein after referred to as Office action) was mailed to applicant on December 17, 2004. Since a response was not received before the expiration of the three-month statutory period for reply, the application was held abandoned and a Notice to that effect was mailed on July 5, 2005.

Applicant's petition indicates that the Office action mailed December 13, 2004 was never received since it was mailed to the wrong address. Petitioner has submitted evidence showing the failure of the Office to mail this Office action to the correspondence address associated with this application.

The Office action of December 17, 2004 was mailed to the address

OGILVY RENAULT
1981 MCGILL COLLEGE AVENUE
SUITE 1600
MONTREAL, OC H3A2Y3
CANADA

However the correspondence address for this application is:

LOUIS J BACHAND
P O BOX 1508
LA CANADA CA 91012-5508

as filed in the Power of Attorney By Inventor(s) (Revocation of Prior Powers) received in the Office on July 15, 2004. The Office action of July 5, 2005 should have been mailed to this address.

The application is being forwarded to the Supervisory Legal Instruments Examiner with instructions to withdraw the abandonment, return the application to pending status and redate and remail the Final Rejection to the correct correspondence address of record.

Kenneth J. Dorner
Special Programs Examiner
Technology Center 3600
(571) 272-6587

KJD/bg: 10/6/2005

UNITED STATES PATENT AND TRADEMARK OFFICE

Commissioner for Patents
United States Patent and Trademark Office
P.O. Box 1450
Alexandria, VA 22313-1450
www.uspto.gov
DIW Oct-06

PHARMACIA CORPORATION
GLOBAL PATENT DEPARTMENT
POST OFFICE BOX 1027
ST. LOUIS MO 63006

COPY MAILED
OCT 27 2006
OFFICE OF PETITIONS

In re Application of	:	
Gregory et al.	:	
Application No. 10/617,222	:	DECISION ON PETITION
Filed: 10 July, 2003	:	
Atty Docket No. PHA 4145.4	:	
(2918/3A)	:	

This is a decision on the petition filed on 19 July, 2006, under 37 CFR 1.137(b),[1] to revive the above-identified application.

The petition is **GRANTED**.

The application became abandoned on 22 February, 2006, for failure to timely submit the issue and publication fees in response to the Notice of Allowance and Fee(s) Due mailed on 21 November, 2005, which set a three (3) month statutory period for reply. Notice of Abandonment was mailed on 5 May, 2006.

---

[1] Effective December 1, 1997, the provisions of 37 CFR 1.137(b) now provide that where the delay in reply was unintentional, a petition may be filed to revive an abandoned application or a lapsed patent pursuant to 37 CFR 1.137(b). A grantable petition filed under the provisions of 37 CFR 1.137(b) must be accompanied by:

(1) the required reply, unless previously filed. In a nonprovisional application abandoned for failure to prosecute, the required reply may be met by the filing of a continuing application. In a nonprovisional utility or plant application filed on or after June 8, 1995, and abandoned for failure to prosecute, the required reply may also be met by the filing of a request for continuing examination in compliance with § 1.114. In an application or patent, abandoned or lapsed for failure to pay the issue fee or any portion thereof, the required reply must be the payment of the issue fee or any outstanding balance thereof. In an application, abandoned for failure to pay the publication fee, the required reply must include payment of the publication fee.

(2) the petition fee as set forth in 37 CFR 1.17(m);

(3) a statement that the entire delay in filing the required reply from the due date for the reply until the filing of a grantable petition pursuant to 37 CFR 1.137(b) was unintentional. The Commissioner may required additional information where there is a question whether the delay was unintentional; and

(4) any terminal disclaimer (and fee as set forth in 37 CFR 1.20(d)) required pursuant to 37 CFR 1.137(c)).

The issue and publication fees have been received.

This application is being referred to the Publishing Division for processing into a patent.

Telephone inquiries concerning this matter may be directed to the undersigned at (571)272-3231.

Douglas I. Wood
Senior Petitions Attorney
Office of Petitions

UNITED STATES PATENT AND TRADEMARK OFFICE

Commissioner for Patents
United States Patent and Trademark Office
P.O. Box 1450
Alexandria, VA 22313-1450
www.uspto.gov

STEIN MCEWEN & BUI LLP
1400 EYE STREET NW
SUITE 300
WASHINGTON DC 20005

COPY MAILED

AUG 27 2007

OFFICE OF PETITIONS

In re Application of	:
Kim, et al.	:
Application No. 10/617,230	:DECISION DISMISSING PETITION
Filed: July 11, 2003	:UNDER 37 CFR § 1.183
Attorney Docket No. 1567.1048	:
	:

This is a decision on "PETITION UNDER 37 CFR 183 TO WAIVE REQUIREMENTS OF 37 CFR 1.64", filed November 1, 2006, which is being treated as a petition under 37 CFR 1.183 to waive the requirement of 37 CFR 1.48(a)(3).

The petition under 37 CFR 1.48(a) is **DISMISSED**.

The petition under 37 CFR 1.183 is **DISMISSED**.

Petitioner is given TWO MONTHS from the mailing date of this decision to reply, correcting the below-noted deficiencies. Any reply should be entitled "Request for Reconsideration of Petitions Under 37 CFR 1.48(a) and 37 CFR 1.183" and should only address the deficiencies noted below, except that the reply may include an oath or declaration executed by the non-signing inventor. **Failure to respond will result in abandonment of the application.** Any extensions of time will be governed by 37 CFR 1.136(a).

The above-identified application was filed on July 11, 2003, with a 37 CFR 1.63 declaration naming inventors Seok Kim, Youngju Jung, and Jan-Dee Kim. With the instant petition, applicants have submitted a declaration naming inventors Kim, Jung, and Kim, in addition to previously unnamed inventors Yunsuk Choi and Soo Seok Choi. The new declaration is executed by inventors Choi, Choi, and Jan-Dee Kim. However, petitioner states that inventors Seok Kim and Jung have left the employment of the assignee, and therefore their signatures have not been obtained.

37 CFR 1.48(a) requires:

> (1) A request to correct the inventorship that sets forth the desired inventorship change;
>
> (2) A statement from each person being added as an inventor and from each person being deleted as an inventor that the inventorship error occurred without deceptive intention on his or her part;
>
> (3) An oath or declaration by the actual inventors as required by § 1.63 or as permitted by §§ 1.42, 1.43, or § 1.47;
>
> (4) The processing fee set forth in § 1.17(i); and
>
> (5) If an assignment has been executed by any of the original named inventors, the written consent of the assignee (see § 3.73(b) of this chapter).

Petitioner has satisfied requirements (1), (2), (4), and (5) above.

Under 37 CFR 1.183, any requirement of the regulations, which is not a requirement of the statutes, may be waived by the Commissioner's designee in an extraordinary situation, when justice so requires. Waiver of the requirement is not yet appropriate in this instance. Petitioner has not provided a showing of his inability to obtain Seok Kim's and Jung's signature on the newly filed declaration, merely a statement that they have left the employment of the assignee. On renewed petition, petitioner must set forth the steps taken to locate Kim and Jung. See MPEP 201.03.

Further correspondence with respect to this matter should be addressed as follows:

By mail: Mail Stop Petitions
Commissioner for Patents
P.O. Box 1450
Alexandria VA 22313-1450

By FAX: (703) 872-9306
Attn: Office of Petitions

Telephone inquiries related to this decision may be directed to the undersigned at (571) 272-3207.

Cliff Congo
Petitions Attorney
Office of Petitions

UNITED STATES PATENT AND TRADEMARK OFFICE

COMMISSIONER FOR PATENTS
UNITED STATES PATENT AND TRADEMARK OFFICE
P.O. BOX 1450
ALEXANDRIA, VA 22313-1450
www.uspto.gov

FRISHAUF, HOLTZ, GOODMAN & CHICK, PC
767 THIRD AVENUE
25TH FLOOR
NEW YORK NY 10017-2023

COPY MAILED

JAN 2 0 2004

OFFICE OF PETITIONS

In re Application of
Kawada, et al.
Application No. 10/617,243
Filed: July 9, 2003
Attorney Docket No. 03397/LH
For: COLOR IMAGE FORMING METHOD AND APPARATUS, AND MICROCAPSULE TONER FOR USE THEREWITH

DECISION GRANTING PETITION

This is a decision on the petition, filed October 10, 2003, (certificate of mailing date October 8, 2003) requesting, in effect, withdrawal of the Notice of Omitted Item(s) in a Nonprovisional Application (Notice), mailed October 6, 2003.

The application was filed on July 9, 2003. On October 6, 2003, the Office of Initial Patent Examination mailed a Notice informing petitioners that page 81 of the specification appeared to have been omitted.

In response to the Notice, petitioners timely filed the present petition. Petitioners request that page 81 be accorded a filing date of July 9, 2003 on the basis that the entire specification, including allegedly missing page 81, was received in the Patent and Trademark Office (PTO) on July 9, 2003. In support, the petition is accompanied by a copy of applicants' itemized postcard receipt showing an Office of Initial Patent Examination generated barcode citing July 9, 2003 as the date of receipt. The postcard lists, *inter alia*, that the filing included 93 pages of "spec, claims and abstract." A review of the application file reveals that there are 92 pages present. Page 81 is missing.

The return postcard constitutes *prima facie* evidence that 93 pages of specification, claims and abstract, including page 81, were filed on July 9, 2003. MPEP 503. Accordingly, the request is **GRANTED**.

No petition fee has been or will be charged in connection with this matter.

The application is being returned to Office of Initial Patent Examination for further processing, with a filing date of July 9, 2003, using the copy of page 81 supplied with the instant petition.

Any inquiries pertaining to this matter may be directed to the undersigned at (703) 308-6712.

E. Shirene Willis

E. Shirene Willis
Senior Petitions Attorney
Office of Petitions

UNITED STATES PATENT AND TRADEMARK OFFICE

Commissioner for Patents
United States Patent and Trademark Office
P.O. Box 1450
Alexandria, VA 22313-1450
www.uspto.gov

COPY MAILED

JAN 2 6 2006

OFFICE OF PETITIONS

DARBY & DARBY
805 THIRD AVENUE
NEW YORK NY 10022

In re Application of	:	
Andrea Leone-Bay et al	:	
Application No. 10/617,266	:	ON PETITION
Filed: July 9, 2003	:	
Attorney Docket No. 01946/100B035-USC	:	

This is a decision on the petition, filed January 25, 2006, under 37 CFR 1.313(c)(2) to withdraw the above-identified application from issue after payment of the issue fee.

The petition is **GRANTED**.

The above-identified application is withdrawn from issue for consideration of a submission under 37 CFR 1.114 (request for continued examination). See 37 CFR 1.313(c)(2).

Petitioner is advised that the issue fee paid on June 29, 2005, in the above-identified application cannot be refunded. If, however, the above-identified application is again allowed, petitioner may request that it be applied towards the issue fee required by the new Notice of Allowance.[1]

Telephone inquiries should be directed to the undersigned at (571) 272-3208.

The examiner of Technology Center AU 1654 will consider the request for continued examination under 37 CFR 1.114.

Karen Creasy

Karen Creasy
Petitions Examiner
Office of Petitions
Office of the Deputy Commissioner
for Patent Examination Policy

---

[1] The request to apply the issue fee to the new Notice may be satisfied by completing and returning the new Issue Fee Transmittal Form PTOL-85(b), which includes the following language thereon: "Commissioner for Patents is requested to apply the Issue Fee and Publication Fee (if any) or re-apply any previously paid issue fee to the application identified above." Petitioner is advised that, whether a fee is indicated as being due or not, the Issue Fee Transmittal Form **must** be completed and timely submitted to avoid abandonment. Note the language in bold text on the first page of the Notice of Allowance and Fee(s) Due (PTOL-85).

UNITED STATES PATENT AND TRADEMARK OFFICE

Commissioner for Patents
United States Patent and Trademark Office
P.O. Box 1450
Alexandria, VA 22313-1450
www.uspto.gov

JONES, TULLAR & COOPER, P.C.
P.O. Box 2266, EADS STATION
Arlington, VA 22202

COPY MAILED

MAR 0 4 2008

OFFICE OF PETITIONS

In re Application of :
David Carl Drummond :
Application No. 10/617,267 : DECISION ON PETITION
Filed: July 11, 2003 :
Attorney Docket No. MAC 490-9 :

This is a decision on the petition under the unintentional provisions of 37 CFR 1.137(b), filed 16 January 2008, to revive the above-identified application.

The petition is **DISMISSED**.

Any request for reconsideration of this decision must be submitted within TWO (2) MONTHS from the mail date of this decision. Extensions of time under 37 CFR 1.136(a) are permitted. The reconsideration request should include a cover letter entitled "Renewed Petition under 37 CFR 1.137(b)." This is **not** a final agency action within the meaning of 5 U.S.C. § 704.

The application became abandoned for failure to reply in a timely manner to the Notice to File Missing Parts of Nonprovisional Application (Notice), mailed 08 October 2003. The Notice set a period for reply of two (2) months from the mail date of the Notice. No extensions of time under the provisions of 37 CFR 1.136(a) were obtained. Accordingly, the application became abandoned on 09 December 2003.

A grantable petition under 37 CFR 1.137(b) must be accompanied by: (1) the required reply, unless previously filed; (2) the petition fee as set forth in 37 CFR 1.17(m); (3) a statement that the entire delay in filing the required reply from the due date for the reply until the filing of a grantable petition pursuant to 37 CFR 1.137(b) was unintentional; and (4) any terminal disclaimer (and fee as set forth in 37 CFR 1.20(d)) required by 37 CFR 1.137(d). Where there is a question as to whether either the abandonment or the delay in filing a petition under 37 CFR 1.137 was unintentional, the Director may require additional information. *See* MPEP 711.03(c)(II)(C) and (D). The instant petition lacks item (3).

The petitioner submitted a payment of $155.00 for the basic filing fee. The correct basic filing fee as set forth in 37 CFR 1.16(a)(2) is $405.00. A difference of $250.00 is charged to deposit account 10-1213.

There are three periods to be considered during the evaluation of a petition under 37 CFR 1.137(b):

(1) the delay in reply that originally resulted in the abandonment;

(2) the delay in filing an initial petition pursuant to 37 CFR 1.137(b) to revive the application; and

(3) the delay in filing a grantable petition pursuant to 37 CFR 1.137(b) to revive the application.

Currently, the delay has not been shown to the satisfaction of the Director to be unintentional for periods (1) and (2).

As to Period (1):

The patent statute at 35 U.S.C. § 41(a)(7) authorizes the Director to revive an "unintentionally abandoned application." The legislative history of Public Law 97-247 reveals that the purpose of 35 U.S.C. § 41(a)(7) is to permit the Office to have more discretion than in 35 U.S.C. §§ 133 or 151 to revive abandoned applications in appropriate circumstances, but places a limit on this discretion, stating that "[u]nder this section a petition accompanied by either a fee of $500 or a fee of $50 **would not be granted where the abandonment** or the failure to pay the fee for issuing the patent **was intentional** as opposed to being unintentional or unavoidable." [emphasis added]. See H.R. Rep. No. 542, 97th Cong., 2d Sess. 6-7 (1982), *reprinted in* 1982 U.S.C.C.A.N. 770-71. The revival of an intentionally abandoned application is antithetical to the meaning and intent of the statute and regulation.

35 U.S.C. § 41(a)(7) authorizes the Director to accept a petition "for the revival of an unintentionally abandoned application for a patent." As amended December 1, 1997, 37 CFR 1.137(b)(3) provides that a petition under 37 CFR 1.137(b) must be accompanied by a statement that the delay was unintentional, but provides that "[t]he Commissioner may require additional information where there is a question whether the delay was unintentional." Where, as here, there is a question whether the initial delay was unintentional, the petitioner must meet the burden of establishing that the delay was unintentional within the meaning of 35 U.S.C. § 41(a)(7) and 37 CFR 1.137(b). *See* In re Application of G, 11 USPQ2d 1378, 1380 (Comm'r Pats. 1989); 37 CFR 1.137(b). Here, in view of the inordinate delay (almost four years) in resuming prosecution, there is a question whether the entire delay was unintentional. Petitioner should note that the issue is not whether some of the delay was unintentional by any party; rather, the issue is whether the entire delay has been shown to the satisfaction of the Director to be unintentional.

The question under 37 CFR 1.137(b) for period (1) is whether the delay on the part of the party having the right or authority to reply to avoid abandonment (or not reply) was unintentional. Accordingly, any renewed petition must clearly identify the party having the right to reply to avoid abandonment on 09 December 2003. That party, in turn must explain what effort(s) was

made to further reply to the outstanding Office action and, further, why no reply was filed. If no effort was made to further reply, then that party must explain why the delay in this application does not result from a deliberate course of action (or inaction). As David Carl Drummond was applicant at the time of abandonment, David Carl Drummond should explain why this application became abandoned while it was under his control and what efforts David Carl Drummond made to further reply of itself and with whom this matter was discussed. Copies of any correspondence relating to the filing, or to not filing a further reply to the outstanding Office action are required from responsible person(s), David Carl Drummond and whoever else was involved with this application at the time of abandonment. Statements are required from the responsible person(s) having firsthand knowledge of the circumstances surrounding the lack of a reply to the outstanding Office action. As the courts have made clear, it is pointless for the USPTO to revive a long abandoned application without an adequate showing that the delay did not result from a deliberate course of action. *See* Lawman Armor v. Simon, 2005 U.S. Dist. LEXIS 10843, 74 USPQ2d 1633 (DC EMich 2005); Field Hybrids, LLC v. Toyota Motor Corp., 2005 U.S. Dist. LEXIS 1159 (D. Minn Jan. 27, 2005); Lumenyte Int'l Corp. v. Cable Lite Corp., Nos. 96-1011, 96-1077, 1996 U.S. App. LEXIS 16400, 1996 WL 383927 (Fed. Cir. July 9, 1996) (unpublished) (patents held unenforceable due to a finding of inequitable conduct in submitting an inappropriate statement that the abandonment was unintentional).

As to Period (2):

Likewise, where the applicant deliberately chooses not to seek or persist in seeking the revival of an abandoned application, or where the applicant deliberately chooses to delay seeking the revival of an abandoned application, the resulting delay in seeking revival of the abandoned application cannot be considered as "unintentional" within the meaning of 37 CFR 1.137(b). *See* MPEP 711.03(c).

The language of both 35 U.S.C. § 41(a)(7) and 37 CFR 1.137(b) are clear and unambiguous, and, furthermore, without qualification. That is, the delay in filing the reply during prosecution, as well as in filing the petition seeking revival, must have been, without qualification, "unintentional" for the reply to now be accepted on petition. The Office requires that the entire delay be at least unintentional as a prerequisite to revival of an abandoned application to prevent abuse and injury to the public. *See* H.R. Rep. No. 542, 97th Cong., 2d Sess. 7 (1982), reprinted in 1982 U.S.C.C.A.N. 771 ("[i]n order to prevent abuse and injury to the public the Commissioner . . . could require applicants to act promptly after becoming aware of the abandonment"). The December 1997 change to 37 CFR 1.137 did not create any new right to overcome an intentional delay in seeking revival, or in renewing an attempt at seeking revival, of an abandoned application. *See* Changes to Patent Practice and Procedure; Final Rule Notice, 62 Fed. Reg. 53131, 53160 (October 10, 1997), 1203 Off. Gaz. Pat. Office 63, 87 (October 21, 1997), which clearly stated that any protracted delay (here, over four years) could trigger, as here, a request for additional information. As the courts have since made clear, a protracted delay in seeking revival, as here, requires a petitioner's detailed explanation seeking to excuse the delay as opposed to USPTO acceptance of a general allegation of unintentional delay. *See* Lawman Armor v. Simon, 2005 U.S. Dist. LEXIS 10843, 74 USPQ2d 1633, at 1637-8 (DC EMich 2005); Field Hybrids, LLC v. Toyota Motor Corp., 2005 U.S. Dist. LEXIS 1159 (D. Minn Jan. 27,

2005) at *21-*23. Statements are required from the responsible person(s) having firsthand knowledge of the circumstances surrounding the protracted delay, after the abandonment date, in seeking revival.

As noted in MPEP 711.03(c)(II), subsection D, in instances in which such petition was not filed within 1 year of the date of abandonment of the application, applicants should include:

> (A) the date that the applicant first became aware of the abandonment of the application; and
> (B) a showing as to how the delay in discovering the abandoned status of the application occurred despite the exercise of due care or diligence on the part of the applicant.

In either instance, applicant's failure to carry the burden of proof to establish that the "entire" delay was "unavoidable" or "unintentional" may lead to the denial of a petition under 37 CFR 1.137(b), regardless of the circumstances that originally resulted in the abandonment of the application. *See also* New York University v. Autodesk, 2007 U.S. DIST LEXIS, U.S.District LEXIS 50832, *10 -*12 (S.D.N.Y. 2007)(protracted delay in seeking revival undercuts assertion of unintentional delay).

Any renewed petition may be addressed as follows:

By Mail:
Mail Stop PETITION
Commissioner for Patents
P. O. Box 1450
Alexandria, VA 22313-1450

By hand:
U. S. Patent and Trademark Office
Customer Service Window, Mail Stop Petitions
Randolph Building
401 Dulany Street
Alexandria, VA 22314

The centralized facsimile number is **(571) 273-8300.**

Correspondence regarding this decision may also be filed through the electronic filing system of the USPTO.

To expedite consideration, petitioner may wish to contact the undersigned regarding the filing of the renewed petition under 37 CFR 1.137(b).

Telephone inquiries concerning this decision should be directed to Allen C. Ho at (571) 272-6052.

David Bucci
Petitions Examiner
Office of Petitions

UNITED STATES PATENT AND TRADEMARK OFFICE

Commissioner for Patents
United States Patent and Trademark Office
P.O. Box 1450
Alexandria, VA 22313-1450
www.uspto.gov

JONES, TULLAR & COOPER, P.C.
P.O. BOX 2266 EADS STATION
ARLINGTON VA 22202

COPY MAILED
SEP 25 2008

In re Application of	:	
David Carl DRUMMOND	:	
Application No. 10/617,267	:	DECISION ON PETITION
Filed: July 11, 2003	:	
Attorney Docket No. DD-08-US	:	

This is a decision on the renewed petition under the unintentional provisions of 37 CFR 1.137(b), filed June 03, 2008, to revive the above-identified application. The renewed petition was filed within three months of the March 04, 2008 decision on the petition filed 1-16-08. The March 4, 2008 decision set a period for reply of two (2) months from the mail date of the petition dismissal. A one month (1) extension of time under the provisions of 37 CFR 1.136(a) was obtained.

The petition is **GRANTED**.

The above-identified application became abandoned for failure to reply in a timely manner to the Notice to File Missing Parts of Nonprovisional Application (Notice), mailed October 8, 2003. The Notice set a period for reply of two (2) months from the mail date of the Notice. No extensions of time under the provisions of 37 CFR 1.136(a) were obtained. Accordingly, the application became abandoned on December 9, 2003.

The petition satisfies the requirements of 37 CFR 1.137(b) in that petitioner has supplied (1) the reply in the form of a fee payment and surcharge of $ 1175, (2) the petition fee of $770, and (3) a proper statement of unintentional delay.

Telephone inquiries concerning this decision should be directed to Karin Reichle at (571) 272-6051.

This application is being referred to Technology Center AU 3751 for appropriate action by the Examiner in the normal course of business on the reply received.

David Bucci
Petitions Examiner
Office of Petitions

UNITED STATES PATENT AND TRADEMARK OFFICE

Commissioner for Patents
United States Patent and Trademark Office
P.O. Box 1450
Alexandria, VA 22313-1450
www.uspto.gov

RICHARD ESTY PETERSON
PATENT ATTORNEY
1905-D PALMETTO AVENUE
PACIFICA, CA 94044

COPY MAILED

JAN 18 2005

OFFICE OF PETITIONS

In re Application of	:	
Tumkur S. Jayadev	:	
Application No. 10/617,268	:	ON PETITION
Filed: July 10, 2002	:	
Attorney Docket No. 5065	:	

This is a decision on the petition under 37 CFR 1.137(b), filed December 27, 2004, to revive the above-identified application.

The petition is **GRANTED**.

The above-identified application became abandoned for failure to submit the issue/publication fee in a timely manner in reply to the Notice of Allowance mailed September 3, 2004, which set a statutory period for reply of three (3) months. Accordingly, the above-identified application became abandoned on December 4, 2004.

Telephone inquiries concerning this decision should be directed to Wan Laymon at (571) 272-3220.

This matter is being referred to the Publishing Division.

Wan Laymon
Petitions Examiner
Office of Petitions
Office of the Deputy Commissioner
for Patent Examination Policy

UNITED STATES PATENT AND TRADEMARK OFFICE

Commissioner for Patents
United States Patent and Trademark Office
P.O. Box 1450
Alexandria, VA 22313-1450
www.uspto.gov

JENKINS, WILSON, TAYLOR & HUNT, P. A.
SUITE 1200 UNIVERSITY TOWER
3100 TOWER BLVD.
DURHAM NC 27707

COPY MAILED

OCT 06 2008

OFFICE OF PETITIONS

In re Application of :
FERIANZ, THOMAS :
Application No. 10/617,310 :
Filed: 07/10/2003 :
Attorney Docket No. 1406/154 :

DECISION ON PETITION

This is a decision on the petition under 37 CFR 1.137(b), filed September 3, 2008, to revive the above-identified application.

The petition is **GRANTED**.

This application became abandoned for failure to pay the issue fee and publication fee as required by the Notice of Allowance and Fee(s) Due mailed on May 30, 2008, which set a three (3) month statutory period for reply. A Notice of Abandonment was mailed on September 5, 2008.

The petition satisfies the requirements of 37 CFR 1.137(b) in that petitioner has supplied (1) the reply in the form of payment of the issue fee and publication fee, (2) the petition fee, and (3) a proper statement of unintentional delay.

This matter is being forwarded to the Office of Data Management for issuance of a patent.

Telephone inquiries concerning the issuance of the application into a patent should be directed to the Office of Data Management, Customer Service at (571) 272-4200.

Telephone inquiries specifically concerning this decision should be directed to the undersigned at (571) 272-3211.

C. T. Donnell

Christina Tartera Donnell
Senior Petitions Attorney
Office of Petitions

UNITED STATES PATENT AND TRADEMARK OFFICE

COMMISSIONER FOR PATENTS
UNITED STATES PATENT AND TRADEMARK OFFICE
P.O. BOX 1450
ALEXANDRIA, VA 22313-1450
www.uspto.gov

COPY MAILED
MAR 30 2004
OFFICE OF PETITIONS

Amersham Health, Inc.
101 Carnegie Center
Princeton, NJ 08540

In re Application of :
Driehuys, et al. :
Application No. 10/617,326 : DECISION GRANTING PETITION
Filed: July 10, 2003 :
Attorney Docket No. PM0026 :

This is a decision on the petition filed November 19, 2003, requesting that the above-identified application be retain a filing date of July 10, 2003, with figures 10I through 10P and 11 as part of the original disclosure.

The petition is **granted**.

On July 10, 2003, the above-identified application was filed. On October 9, 2003, the Office of Initial Patent Examination mailed a "Notice of Omitted Items of Nonprovisional Application" (the "Notice"), stating that Figures 10I through 10P and 11 appeared to have been omitted, but that a filing date had been accorded the application.

In response, the present petition was filed wherein petitioner argues that although the figures were inadvertently omitted, the subject application was complete on filing because the it is a divisional of application 09/804,369 and claims the benefit of application 60/189,072 and incorporates by reference the application 60/189,072 in its entirety.

As statement incorporating by reference provisional application 60/189,072 in its entirety was found in the specification and in a preliminary amendment thereto.

Based on applicants' representation that the omitted figures supplied with the petition are parts of the disclosure of provisional application 60/189,072 and the entire disclosure of provisional application 60/189,072 was specifically incorporated by reference in the present application on July 10, 2003, it appears that the Figures 10I through 10P and 11 were present in the Office on July 10, 2003, albeit in the file of another application, i.e., provisional application 60/189,072. Accordingly, the application may be retain the presently accorded filing date of July 10, 2003.

The petition fee will not be refunded, since the petition was required to accord the application the requested filing date.

Of course, the primary examiner is expected to examine the contents of application 60/189,072 to determine if the omitted figures are a part of the disclosure of the prior application.

The application is being returned to Initial Patent Examination Division for further processing with a filing date of July 10, 2003.

Any inquiries related to this decision should be directed to Kenya A. McLaughlin, Petitions Attorney, at (703)305-0010

Kenya A. McLaughlin

Kenya A. McLaughlin
Petitions Attorney
Office of Petitions

UNITED STATES PATENT AND TRADEMARK OFFICE

UNITED STATES DEPARTMENT OF COMMERCE
United States Patent and Trademark Office
Address: COMMISSIONER FOR PATENTS
P.O. Box 1450
Alexandria, Virginia 22313-1450
www.uspto.gov

PVF -- ORACLE INTERNATIONAL CORPORATION
c/o PARK, VAUGHAN & FLEMING LLP
2820 FIFTH STREET
DAVIS, CA 95618-7759

Mail Date: 04/21/2010

Applicant	: Isaac J. William	: DECISION ON REQUEST FOR
Patent Number	: 7647258	: RECALCULATION of PATENT
Issue Date	: 01/12/2010	: TERM ADJUSTMENT IN VIEW
Appliction No	: 10/617,327	: OF WYETH AND NOTICE OF INTENT TO
Filed	: 07/09/2003	: ISSUE CERTIFICATE OF CORRECTION
		:

The Request for Recalculation is **GRANTED** to the extent indicated.

The patent term adjustment has been determined to be **1523** days. The USPTO will *sua sponte* issue a certificate of correction reflecting the amount of PTA days determined by the recalculation.

Prior to the issuance of the certificate of correction, the USPTO will afford patentee an opportunity to be heard and request reconsideration. Accordingly, patentee has **one month or thirty (30) days**, whichever is longer, to file a request for reconsideration of this patent term adjustment calculation. See 35 U.S.C. 154(b)(3)(B)(ii) and 37 CFR 1.322(a)(4). No extensions of time will be granted under 37 CFR 1.136.

Patentee should use document code PET.OP if electronically filing a request for reconsideration of this patent term adjustment calculation. The patentee must also include the information required by 37 CFR 1.705(b)(2) and the fee required by 37 CFR 1.18(e). If patentee does not file a timely request for reconsideration of this patent term adjustment calculation including the information required by 37 CFR 1.705(b)(2) and the fee required by 37 CFR 1.18(e), the USPTO will issue a certificate of correction reflecting the PTA determination noted above.

Patentee should be aware that in order to preserve the right to review in the United States District Court for the District of Columbia of the USPTO patent term adjustment determination, patentee must ensure that he or she also take the steps required under 35 U.S.C. 154(b)(4)(A) in a timely manner. Nothing in the request for recalculation should be construed as providing an alternative time frame for commencing a civil action under 35 U.S.C. 154(b)(4)(A).

Any questions concerning this decision should be directed to the Office of Patent Legal Administration at 571-272-7702.

UNITED STATES PATENT AND TRADEMARK OFFICE

Commissioner for Patents
United States Patent and Trademark Office
P.O. Box 1450
Alexandria, VA 22313-1450
www.uspto.gov

MAR 11 2005

FRELING E. BAKER
LAW OFFICES OF FRELING E. BAKER
SUITE 203
12625 HIGH BLUFF DRIVE
SAN DIEGO CA 92130

In re Application of	:
Jennifer A. Samproni	:
Serial No.: 10/617,337	: STATUS LETTER
Filed: July 10, 2003	:
Attorney Docket No.: 2227-027	:

This is in response to the request, filed January 14, 2005, to withdraw from representation in the above identified application.

Insofar as can be determined the above identified attorney and those listed on the attached request has never been appointed to represent the above identified applicant in this application. Therefor no withdrawal can be effected.

The request to withdraw is **DISMISSED**.

Should there be any questions with regard to this letter please contact William R. Dixon, Jr. by letter addressed to the Director, Technology Center 1600, PO BOX 1450, ALEXANDRIA, VA 22313-1450, or by telephone at 571-272-0519 or by facsimile transmission at Office facsimile number.

William R. Dixon, Jr.
Special Program Examiner
Technology Center 1600

cc:

JAMES McCLAIN
GORDON & REES
101 WEST BROADWAY, SUITE 1600
SN DIEGO, CA 92101

OIPE JC48
JAN 1 4 2005
PATENT & TRADEMARK OFFICE

PTO/SB/83 (09-04)
Approved for use through 11/30/2005. OMB 0651-0035
U.S. Patent and Trademark Office, U.S. DEPARTMENT OF COMMERCE
Under the Paperwork Reduction Act of 1995, no persons are required to respond to a collection of information unless it displays a valid OMB control number.

REQUEST FOR WITHDRAWAL AS ATTORNEY OR AGENT AND CHANGE OF CORRESPONDENCE ADDRESS

Application Number	10/617,337
Filing Date	July 10, 2003
First Named Inventor	Jennifer A. Samproni
Art Unit	na
Examiner Name	na
Attorney Docket Number	BSDMI 1030746

To: Commissioner for Patents
P.O. Box 1450
Alexandria, VA 22313-1450

Please withdraw me as attorney or agent for the above identified patent application, and

- [ ] all the attorneys/agents of record.
- [ ] the attorneys/agents (with registration numbers) listed on the attached paper(s), or
- [x] the attorneys/agents associated with Customer Number 27111

NOTE: This box can only be checked when the power of attorney of record in the application is to all the practitioners associated with a customer number.

The reasons for this request are: Transfer case to client

NOT Approved
[illegible]

CORRESPONDENCE ADDRESS

1. [ ] The correspondence address is NOT affected by this withdrawal.
2. [x] Change the correspondence address and direct all future correspondence to:

[ ] The address associated with Customer Number:

OR

NOT OF Record

[x] Firm or Individual Name	RADIOMETER MEDICAL ApS				
Address	Akandevej 21 DK-2700 Bronshoj				
City	Bronshoj	State		Zip	DK-2700
Country	DENMARK				
Telephone	45-38-27-38-27			Fax	45-38-272727

Signature			
Name	James McClain	Registration No.	24,536
Date	January 7, 2005	Telephone No.	619-696-6700

NOTE: Withdrawal is effective when approved rather than when received. Unless there are at least 30 days between approval of withdrawal and the expiration date of a time period for response or possible extension period, the request to withdraw is normally disapproved.

This collection of information is required by 37 CFR 1.36. The information is required to obtain or retain a benefit by the public which is to file (and by the USPTO to process) an application. Confidentiality is governed by 35 U.S.C. 122 and 37 CFR 1.11 and 1.14. This collection is estimated to take 12 minutes to complete, including gathering, preparing, and submitting the completed application form to the USPTO. Time will vary depending upon the individual case. Any comments on the amount of time you require to complete this form and/or suggestions for reducing this burden, should be sent to the Chief Information Officer, U.S. Patent and Trademark Office, U.S. Department of Commerce, P.O. Box 1450, Alexandria, VA 22313-1450. DO NOT SEND FEES OR COMPLETED FORMS TO THIS ADDRESS. SEND TO: **Commissioner for Patents, P.O. Box 1450, Alexandria, VA 22313-1450.**

If you need assistance in completing the form, call 1-800-PTO-9199 and select option 2.

UNITED STATES PATENT AND TRADEMARK OFFICE

Commissioner for Patents
United States Patent and Trademark Office
P.O. Box 1450
Alexandria, VA 22313-1450
www.uspto.gov

Paper No.

WHITHAM, CURTIS & CHRISTOFFERSON, P.C.
11491 SUNSET HILLS ROAD
SUITE 340
RESTON VA 20190

COPY MAILED

MAY 0 4 2004

OFFICE OF PETITIONS

In re Application of Noah Dan and Damon Anderson Application No. 10/617,360 Filed: July 11, 2003 Attorney Docket No. 07980001AA Title: SYSTEM AND METHOD FOR BUILDING CUSTOM APPLICATION ON AN APPLICATION SERVER	DECISION ACCORDING STATUS UNDER 37 CFR 1.47(a)

This is a decision on the "PETITION UNDER 37 C.F.R. § 1.47(a)," filed Monday, March 15, 2004.

The petition is **GRANTED**.

The above-identified application was filed on July 11, 2003, without an executed oath or declaration. Noah Dan and Damon Anderson were named as joint inventors. Accordingly, on October 14, 2003, a "Notice to File Missing Parts of Nonprovisional Application" was mailed, requiring an executed oath or declaration and a surcharge for its late filing.

In response, rule 47 applicants filed the instant petition (and fee); the late surcharge; and a declaration executed by inventor Dan on behalf of himself and on behalf of non-signing joint inventor Anderson. This response was made timely by an. accompanying petition and fee for extension for response within the third month. Rule 47 applicants maintain that status under 37 CFR 1.47 is proper because joint inventor Anderson refuses to join in the application for patent.

By declaration of facts of joint inventor Dan, petitioner has shown that the application papers were presented to inventor Anderson. However, he has refused to sign the declaration. The last known address of inventor Anderson is deemed to be as set forth in the declaration for patent.

The declaration filed March 15, 2004, and the petition have been reviewed and found in compliance with 37 CFR 1.47(a).

This application is hereby accorded Rule 1.47(a) status.

As provided in new Rule 1.47(c), this Office will forward notice of this application's filing to the non-signing inventor at the

BEST AVAILABLE COPY

address given in the petition. Notice of the filing of this application will also be published in the Official Gazette.

The application will be examined in Technology Center 2171 in due course.

Telephone inquiries regarding this decision should be directed to the undersigned at (703) 305-0309.

Nancy Johnson
Senior Petitions Attorney
Office of Petitions

BEST AVAILABLE COPY

UNITED STATES PATENT AND TRADEMARK OFFICE

COMMISSIONER OF PATENTS

March 16, 2005

Gregory D. Williams
New England Biolabs, Inc.
32 Tozer Road
Beverly, MA 01915

In re Application of:
Morgan, et al
Serial No: 10/617,361 On Petition
Filing Date: July 10, 2003
For: **NOVEL TYPE II RESTRICTION ENDONUCLEASE, BTGZI, OBTAINABLE BACILLUS THERMOGLUCOSIDASIUS 36A AND A PROCESS FOR PRODUCING THE SAME**

In response to the petition received May 24, 2004, to withdraw the holding of abandonment in the above application.

The petition is Granted.

The above-identified application became abandoned for failure to reply with the meaning of 37 C.D.R 1.113 in a timely manner to the Notice to File Missing Parts of Nonprovisional Application mailed October 14, 2003. Which set forth a shortened statutory period for reply of two months. Accordingly, the above-identified application became abandoned December 15, 2003.

The evidence submitted is sufficient to establish that the petitioners never received the Notice to File Missing Parts of Nonprovisional Application mailed October 15, 2003.

The application will be completed with the documents received on May 24, 2004 and released to Technology Center 1645.

The office regrets any inconvenience this may have caused the client.

Telephone inquiries concerning this application may be directed to Doshie E. Day (703) 308-3640.

Doshie E. Day
Program Management Assistant
Office of Initial Patent Examination

UNITED STATES PATENT AND TRADEMARK OFFICE

COMMISSIONER FOR PATENTS
UNITED STATES PATENT AND TRADEMARK OFFICE
P.O. BOX 1450
ALEXANDRIA, VA 22313-1450
www.uspto.gov

MAIL

APR 13 2005

DIRECTOR OFFICE
TECHNOLOGY CENTER 2600

Christian C. Michel
Roylance, Abrams, Berdo & Goodman, L.L.P.
Suite 600
1300 19th Street, N.W.
Washington DC 20036

In re Application of)
WU, ZHANGYI, et al.)
Application No. 10/617,363)
Filed: July 11, 2003)
For: SYSTEM AND METHOD FOR REAL TIME)
RESERVOIR MANAGEMENT)

DECISION ON PETITION
TO MAKE SPECIAL

This is a decision on the petition to make special filed March 17, 2005 pursuant to 37 C.F.R. §102(c) and M.P.E.P. § 708.02(VI): Energy.

A grantable petition under 37 C.F.R. § 1.102(c), and M.P.E.P. § 708.02, Section VI, must be accompanied by a showing that the application is for an invention which materially contributes to (A) the discovery or development of energy resources, or (B) the more efficient utilization and conservation of energy resources. Examples of inventions in category (A) would be developments in fossil fuels (natural gas, coal, and petroleum), nuclear energy, solar energy, etc. Category (B) would include inventions relating to the reduction of energy consumption in combustion systems, industrial equipment, household appliances etc. Such petitions should be accompanied by statements under 37 C.F.R. § 1.102 by the applicant, assignee, or an attorney/agent registered to practice before the Office explaining how the invention materially contributes to category (A) or (B) set forth above.

The petition does not meet the requirements for special status in that there is no showing that the invention materially contributes to the conservation of energy resources as required in (B). Applicant indicates that the invention reduces the need for installation of fiber optic lines. Thus reducing energy consumption. Petitioner has not shown how a reduction in the need for fiber optics corresponds to reduced energy consumption.

The petition is **DENIED**.

Should applicant desire reconsideration, he/she should supplement this petition by a declaration or statement giving the information as outlined above.

Any request for reconsideration must be filed within **TWO MONTHS** of the date of this decision.

Kenneth A. Wieder
Special Program Examiner
Technology Center 2600
Communications

UNITED STATES PATENT AND TRADEMARK OFFICE

Commissioner for Patents
United States Patent and Trademark Office
P.O. Box 1450
Alexandria, VA 22313-1450
www.uspto.gov

CHRISTIAN C. MICHEL
ROYLANCE ABRAMS BERDO & GOODMAN
SUITE 600
1300 19TH STREET, N.W.
WASHINGTON, DC 20036

COPY MAILED

NOV 30 2005

OFFICE OF PETITIONS

In re Application of	:	
Zhangyi Wu et al	:	
Application No. 10/617,363	:	DECISION ON PETITION
Filed: July 11, 2003	:	TO MAKE SPECIAL
Attorney Docket No. 45047	:	37 CFR 1.102(c)(2)
	:	

This is a decision on the renewed petition under 37 CFR 1.102(c)(2)(ii), filed June 13, 2005, to make the above-identified application special based on the invention materially contributing to the development or conservation of energy resources as set forth in M.P.E.P. § 708.02, Section VI.

The petition is **DISMISSED**.

A grantable petition to make an application special under 37 CFR 1.102(c)(2)(ii) and MPEP § 708.02, Section VI: Energy, must state how the invention materially contributes to (A) the discovery or development of energy resources, or (b) the more efficient utilization and conservation of energy resources. If the disclosure is not clear on its face that the claimed invention materially contributes category (A) or (B), the petition must be accompanied by a statement by the applicant, assignee, or an attorney/agent registered to practice before the Office explaining how the materiality standard is met. Examples of inventions in category (A) would be developments in fossil fuels (natural gas, coal, and petroleum), hydrogen fuel technologies, nuclear energy, solar energy, etc. Category (B) would include inventions relating to the reduction of energy consumption in combustion systems, industrial equipment, household appliances, etc. No fee is required.

The disclosure explains that the invention uses twisted pairs to carry high-speed data traffic (e.g., DS3) and is an improvement over existing solutions. The petition does not demonstrate how this invention materially contributes to a more efficient utilization and conservation of energy resources. The petition focuses on how the present invention would not require excavation equipment to install fiber optic lines to carry the high-speed data traffic, and thus, fossil fuels are being conserved. This connection is too remote to the actual invention of transmitting high-speed data traffic on twisted pairs. First, the petition improperly focuses on excavation equipment, which is not part of the disclosed invention, rather than how the invention at hand, a high-speed

data traffic system, materially contributes to a more efficient utilization and conservation of energy resources. Second, there is insufficient evidence that new fiber optics would have to be installed since the petition assumes that new fiber optics would have to be installed rather than using existing lines. Third, the petition emphasizes the only current alternative solution to carry high-speed data traffic, which uses fiber optic equipment. The two other previous solutions discussed on pages 2 through 3 under the Background of the Invention section of the specification do not require fiber optic equipment and use twisted pairs. Therefore, the petition does not demonstrate how the invention itself materially contribute more efficiently to the utilization of energy resources and the conservation of energy resources.

Further correspondence with respect to this matter should be addressed as follows:

By Mail: Mail Stop PETITION
Commissioner for Patents
P. O. Box 1450
Alexandria, VA 22313-1450

By hand: U. S. Patent and Trademark Office
Customer Service Window, Mail Stop Petitions
Randolph Building
401 Dulany Street
Alexandria, VA 22314

By FAX: (571) 273-8300

Telephone inquiries concerning this decision should be directed to Wan Laymon at 571-272-3220.

All other inquiries concerning either the examination or status of the application should be directed to the Technology Center.

This matter is being referred to Technology Center AU 2665 for action in its regular turn.

David Bucci
Petitions Examiner
Office of Petitions

UNITED STATES PATENT AND TRADEMARK OFFICE

Commissioner for Patents
United States Patent and Trademark Office
P.O. Box 1450
Alexandria, VA 22313-1450
www.uspto.gov

EITAN PEARL LATZER & COHEN ZEDEK
10 ROCKEFELLER PLAZA, SUITE 1001
NEW YORK, NY 10020

COPY MAILED

DEC 3 0 2004

OFFICE OF PETITIONS

In re Application of	:	
Mark G. Gilreath et al	:	
Application No. 10/617,372	:	ON PETITION
Filed: July 11, 2003	:	
Attorney Docket No. P-4438-US	:	

This is a decision on the petition under 37 CFR 1.137(b), filed November 3, 2004, to revive the above-identified application.

The petition is **GRANTED**.

The above-identified application became abandoned for failure to reply in a timely manner to the Notice to File Missing Parts of Nonprovisional Application (Notice) mailed October 9, 2003. The Notice set a period for reply of two (2) months from the mail date of the Notice. No extensions of time under the provisions of 37 CFR 1.136(a) were obtained. Accordingly, the above-identified application became abandoned on December 10, 2003.

Telephone inquiries concerning this decision should be directed to Wan Laymon at (571) 272-3220.

This matter is being referred to the Office of Initial Patent Examination for preexamination processing.

Wan Laymon

Wan Laymon
Petitions Examiner
Office of Petitions
Office of the Deputy Commissioner
for Patent Examination Policy

UNITED STATES PATENT AND TRADEMARK OFFICE

Commissioner for Patents
United States Patent and Trademark Office
P.O. Box 1450
Alexandria, VA 22313-1450
www.uspto.gov

John S. Egbert
Harrison & Egbert
412 Main St., 7th Floor
Houston, Texas 77002

MAILED

JUN 29 2004

Director's Office
Group 3700

In re application of Hill, Raymond G.	: : :	**DECISION ON PETITION** **TO MAKE SPECIAL** **UNDER 37 CFR. 1.102(c)**
Serial Number: 10/617373 Filed: July 11, 2003	: :	

For: **INJECTION SPRAYING SYSTEM**

This is a decision on the petition filed on February 27, 2004, under 37 CFR. 1.102(c) to make special the above identified application because of the age/health of the applicant. Since the requirements of the M.P.E.P Section 708.02 IV have been met, the petition will be GRANTED.

The examiner is directed (1) to make an interference search for possible interfering applications, (2) to promptly examine this application out of turn, and (3) if any interfering application is discovered, to examine such application simultaneously and state in the first official letter of such application that it is being taken out of turn because of a possible interference.

Petitioner is advised that this application will continue to be special, throughout its entire prosecution and pendency, including interference or appeal, if any, only is Petitioner makes a prompt bona-fide effort, in response to each Office action, to place the application in condition for allowance, even if it is necessary to conduct an interview with the Examiner to accomplish this purpose.

Summary: Decision on Petition **GRANTED**.

Richard A. Bertsch
Director
Technology Center 3700
(703) 308-0975

rt: 6/28/04

UNITED STATES PATENT AND TRADEMARK OFFICE

UNITED STATES DEPARTMENT OF COMMERCE
United States Patent and Trademark Office
Address: COMMISSIONER FOR PATENTS
P.O. Box 1450
Alexandria, Virginia 22313-1450
www.uspto.gov

APPL NO.	FILING OR 371 (c) DATE	ART UNIT	FIL FEE REC'D	ATTY.DOCKET NO	DRAWINGS	TOT CLMS	IND CLMS
10/617,422	07/11/2003	2122	869	VOCO-06-273	3	49	7

CONFIRMATION NO. 3226

CORRECTED FILING RECEIPT

OC000000014021352

26875
WOOD, HERRON & EVANS, LLP
2700 CAREW TOWER
441 VINE STREET
CINCINNATI, OH 45202

Date Mailed: 10/07/2004

Receipt is acknowledged of this regular Patent Application. It will be considered in its order and you will be notified as to the results of the examination. Be sure to provide the U.S. APPLICATION NUMBER, FILING DATE, NAME OF APPLICANT, and TITLE OF INVENTION when inquiring about this application. Fees transmitted by check or draft are subject to collection. Please verify the accuracy of the data presented on this receipt. **If an error is noted on this Filing Receipt, please write to the Office of Initial Patent Examination's Filing Receipt Corrections, facsimile number 703-746-9195. Please provide a copy of this Filing Receipt with the changes noted thereon. If you received a "Notice to File Missing Parts" for this application, please submit any corrections to this Filing Receipt with your reply to the Notice. When the USPTO processes the reply to the Notice, the USPTO will generate another Filing Receipt incorporating the requested corrections (if appropriate).**

Applicant(s)

Arthur Eugene McNair, Pittsburgh, PA;
Roger Graham Byford, Apollo, PA;
Richard Anthony Bates, Pittsburgh, PA;

Assignment For Published Patent Application

Vocollect, Inc.

Power of Attorney: The patent practitioners associated with Customer Number **26875**.

Domestic Priority data as claimed by applicant

Foreign Applications

If Required, Foreign Filing License Granted: 10/14/2003

The number of your priority application, to be used for filing abroad under the Paris Convention is,
US10/617,422

Projected Publication Date: 01/13/2005

Non-Publication Request: No

Early Publication Request: No

**** SMALL ENTITY ****

Title

Method and system for integrating multi-modal data capture device inputs with multi-modal output capabilities

Preliminary Class

717

LICENSE FOR FOREIGN FILING UNDER
Title 35, United States Code, Section 184
Title 37, Code of Federal Regulations, 5.11 & 5.15

GRANTED

The applicant has been granted a license under 35 U.S.C. 184, if the phrase "IF REQUIRED, FOREIGN FILING LICENSE GRANTED" followed by a date appears on this form. Such licenses are issued in all applications where the conditions for issuance of a license have been met, regardless of whether or not a license may be required as set forth in 37 CFR 5.15. The scope and limitations of this license are set forth in 37 CFR 5.15(a) unless an earlier license has been issued under 37 CFR 5.15(b). The license is subject to revocation upon written notification. The date indicated is the effective date of the license, unless an earlier license of similar scope has been granted under 37 CFR 5.13 or 5.14.

This license is to be retained by the licensee and may be used at any time on or after the effective date thereof unless it is revoked. This license is automatically transferred to any related applications(s) filed under 37 CFR 1.53(d). This license is not retroactive.

The grant of a license does not in any way lessen the responsibility of a licensee for the security of the subject matter as imposed by any Government contract or the provisions of existing laws relating to espionage and the national security or the export of technical data. Licensees should apprise themselves of current regulations especially with respect to certain countries, of other agencies, particularly the Office of Defense Trade Controls, Department of State (with respect to Arms, Munitions and Implements of War (22 CFR 121-128)); the Office of Export Administration, Department of Commerce (15 CFR 370.10 (j)); the Office of Foreign Assets Control, Department of Treasury (31 CFR Parts 500+) and the Department of Energy.

NOT GRANTED

No license under 35 U.S.C. 184 has been granted at this time, if the phrase "IF REQUIRED, FOREIGN FILING LICENSE GRANTED" DOES NOT appear on this form. Applicant may still petition for a license under 37 CFR 5.12, if a license is desired before the expiration of 6 months from the filing date of the application. If 6 months has lapsed from the filing date of this application and the licensee has not received any indication of a secrecy order under 35 U.S.C. 181, the licensee may foreign file the application pursuant to 37 CFR 5.15(b).

UNITED STATES PATENT AND TRADEMARK OFFICE

Commissioner for Patents
United States Patent and Trademark Office
P.O. Box 1450
Alexandria, VA 22313-1450
www.uspto.gov

KENNEDY COVINGTON LOBDELL & HICKMAN, LLP
214 N. TRYON STREET
HEARST TOWER, 47TH FLOOR
CHARLOTTE, NC 28202

COPY MAILED

AUG 0 3 2004

OFFICE OF PETITIONS

In re Application of	:	
Rindoks et al.	:	
Application No. 10/617,432	:	DECISION GRANTING PETITION
Filed: July 11, 2003	:	UNDER 37 CFR 1.137(b)
Attorney Docket No. 18501.094	:	

This is a decision on the petition, filed May 20, 2004, which is being treated as a petition under 37 CFR 1.137(b) to revive the instant non-provisional application for failure to timely notify the U.S. Patent and Trademark (USPTO) of the filing of an application in a foreign country, or under a multinational treaty that requires publication of applications eighteen months after filing. *See* 37 CFR 1.137(f).

The petition is **GRANTED**.

Petitioner states that the instant nonprovisional application is the subject of an application filed in an eighteen-month publication country on February 10, 2004. However, the USPTO was unintentionally not notified of this filing within 45 days subsequent to the filing of the subject application in an eighteen-month publication country.

In view of the above, this application became abandoned pursuant to 35 U.S.C. § 122(b)(2)(B)(iii) and 37 CFR 1.213(c) for failure to timely notify the Office of the filing of an application in a foreign country or under a multilateral international agreement that requires publication of applications 18 months after filing.

A petition to revive an application abandoned pursuant to 35 U.S.C. 122(b)(2)(B)(iii) for failure to notify the USPTO of a foreign filing must be accompanied by:

(1) the required reply which is met by the notification of such filing in a foreign country or under a multinational treaty;
(2) the petition fee as set forth in 37 CFR 1.17(m); and
(3) a statement that the entire delay in filing the required reply from the due date of the reply until the filing of a grantable petition was unintentional.

The instant petition has been found to be in compliance with 37 CFR 1.137(b). Accordingly, the failure to timely notify the USPTO of a foreign or international filing within 45 days after the date of filing of such foreign or international application as provided by 35 U.S.C. § 122(b)(2)(B)(iii) and 37 CFR 1.213(c) is accepted as having been unintentionally delayed.

The previous Request and Certification under 35 U.S.C. § 122(b)(2)(B)(i) has been rescinded. A Notice Regarding Rescission of Nonpublication Request which sets forth the projected publication date of January 13, 2005 was previously mailed on June 7, 2004.

Petitioner only submitted $1300.00 towards payment of the petition fee, which is actually $1330.00. Accordingly, an additional $30.00 has been charged to petitioner's deposit account as authorized.

This matter is being forwarded to Technology Center Art Unit 3749 for examination in due course.

Telephone inquiries concerning this decision should be directed to the undersigned at (703) 306-0482. Any telephone inquiries after approximately **September 24, 2004** should be directed to the undersigned at (571) 272-3282.

Liana Chase

Liana Chase
Petitions Examiner
Office of Petitions
Office of the Deputy Commissioner
for Patent Examination Policy

UNITED STATES PATENT AND TRADEMARK OFFICE

Commissioner for Patents
United States Patent and Trademark Office
P.O. Box 1450
Alexandria, VA 22313-1450
www.uspto.gov

TEXAS INSTRUMENTS INCORPORATED
P O BOX 655474, M/S 3999
DALLAS, TX 75265

COPY MAILED

APR 0 1 2005

OFFICE OF PETITIONS

In re Application of :
Prexl et al. :
Application No. 10/617,433 :
Filed: July 11, 2003 :
Attorney Docket No. TI-34047 :

ON PETITION

This is a decision on the petition under 37 C.F.R. § 1.182, filed February 14, 2005, to change the name of an inventor.

The petition is **GRANTED.**

The name will be changed from **Kaiser Ulrich** to **Ulrich Kaiser**.

This matter is being referred to the Publishing Division to await payment of the issue and publication fees.

Telephone inquiries regarding this decision should be directed to Paralegal Liana Chase at (571) 272-3282.

Frances Hicks
Petitions Examiner
Office of Petitions
Office of the Deputy Commissioner
for Patent Examination Policy

Enclosure: Corrected Filing Receipt

UNITED STATES PATENT AND TRADEMARK OFFICE

Commissioner for Patents
United States Patent and Trademark Office
P.O. Box 1450
Alexandria, VA 22313-1450
www.uspto.gov

COPY MAILED

FEB 01 2007

OFFICE OF PETITIONS

HARRINGTON & SMITH, PC
4 RESEARCH DRIVE
SHELTON CT 06484-6212

In re Application of :
Anssi Haverinen et al :
Application No. 10/617,454 : ON PETITION
Filed: July 10, 2003 :
Attorney Docket No. 878.0034.U1(US) :

This is a decision on the petition, filed January 26, 2007, under 37 CFR 1.313(c)(2) to withdraw the above-identified application from issue after payment of the issue fee.

The petition is **GRANTED.**

The above-identified application is withdrawn from issue for consideration of a submission under 37 CFR 1.114 (request for continued examination). See 37 CFR 1.313(c)(2).

Petitioner is advised that the issue fee paid on December 26, 2006 in the above-identified application cannot be refunded. If, however, the above-identified application is again allowed, petitioner may request that it be applied towards the issue fee required by the new Notice of Allowance.[1]

Telephone inquiries should be directed to the undersigned at (571) 272-3208.

The examiner of Technology Center AU 2181 will consider the request for continued examination under 37 CFR 1.114.

Karen Creasy

Karen Creasy
Petitions Examiner
Office of Petitions

---

[1] The request to apply the issue fee to the new Notice may be satisfied by completing and returning the new Issue Fee Transmittal Form PTOL-85(b), which includes the following language thereon: "Commissioner for Patents is requested to apply the Issue Fee and Publication Fee (if any) or re-apply any previously paid issue fee to the application identified above." Petitioner is advised that, whether a fee is indicated as being due or not, the Issue Fee Transmittal Form **must** be completed and timely submitted to avoid abandonment. Note the language in bold text on the first page of the Notice of Allowance and Fee(s) Due (PTOL-85).

UNITED STATES PATENT AND TRADEMARK OFFICE

Commissioner for Patents
United States Patent and Trademark Office
P.O. Box 1450
Alexandria, VA 22313-1450
www.uspto.gov

SEP 7 2004

In re Application of
Steven Roy Lipscomb *et al*
Application No. 10/617,477
Filed: July 11, 2003
Attorney Docket No. 320400-00004

DECISION ON PETITION

This is a decision on the petition to make special filed on August 13, 2004. The petition is submitted pursuant to the practice established in MPEP § 708.02(II) "Infringement." The $130.00 petition fee has allegedly been submitted in the form of a check, but Office records do not confirm this. The petition fee will be charged to Deposit Account No. 50-1214, and if ultimately there is a duplicate charge, petitioners may request a refund.

The petition is dismissed.

A review of the petition shows that petitioners allege that a declaration has been submitted in support of the allegation that an actual infringement exists warranting grant of the petition. However, the file does not appear to contain such declaration. Absent the declaration, the petition lacks the required statements (A)-(C) set forth in MPEP § 708.02(II).

Petitioners may file a renewed petition, perfecting the originally filed petition, without additional fee. Any renewed petition must be filed within two months of the date of this Decision. See 37 CFR 1.181(f).

It is noted that an Office action was promulgated on May 19, 2003. Petitioners are reminded that the filing of the instant petition or any renewed petition will not stay the period for filing a reply to the outstanding Office action. 37 CFR 1.181(f).

The application is being forwarded to the Head Supervisory Applications Examiner to charge the $130.00 petition fee to Deposit Account No. 50-1214.

PETITION DISMISSED.

Stephen Marcus, Special Program Examiner,
Technology Center 3700

Patent Administrator
Katten Muchin Zavis Rosenman
525 West Monroe Street
Suite 1600
Chicago, IL 60661

UNITED STATES PATENT AND TRADEMARK OFFICE

Commissioner for Patents
United States Patent and Trademark Office
P.O. Box 1450
Alexandria, VA 22313-1450
www.uspto.gov

NOV 10 2004

In re Application of	:
Steven Roy Lipscomb *et al*	:
Application No. 10/617,477	: DECISION ON
Filed: July 11, 2003	: RENEWED PETITION
Attorney Docket No. 320400-00004	:

This is a decision on the renewed petition to make special filed on September 20, 2004. The petition is submitted pursuant to the practice established in MPEP § 708.02(II) "Infringement." The $130.00 petition fee allegedly been submitted in the form of a check with the original petition, but Office records do not confirm this. The petition fee will be charged to Deposit Account No. 50-1214, and if ultimately there is a duplicate charge, petitioners may request a refund.

The renewed petition is granted.

A review of the renewed petition shows that petitioners have now satisfied all of the requirements set forth in MPEP § 708.02(II). Accordingly, the examiner will treat this application as special throughout its prosecution. Prior to the first action on the merits, the examiner will conduct a rigorous search for potentially interfering applications. The interference search will be brought up to date prior to each successive action.

The Supervisory Patent Examiner of Patent Examining Art Unit 3711 will be notified of this decision, and will inform the assigned examiner to take action not inconsistent there with this decision.

PETITION GRANTED.

Stephen Marcus, Special Program Examiner,
Technology Center 3700

Patent Administrator
Katten Muchin Zavis Rosenman
525 West Monroe Street
Suite 1600
Chicago, IL 60661

UNITED STATES PATENT AND TRADEMARK OFFICE

Commissioner for Patents
United States Patent and Trademark Office
P.O. Box 1450
Alexandria, VA 22313-1450
www.uspto.gov

RAMAN N. DEWAN
JACKSON WALKER, L.L.P.
100 CONGRESS AVENUE
SUITE 1100
AUSTIN, TX 78701

COPY MAILED

NOV 19 2008

OFFICE OF PETITIONS

In re Patent No. 7,174,011	:	
Issue Date: February 6, 2007	:	
Application No. 10/617,486	:	ON PETITION
Filed: July 11, 2003	:	
Patentee(s): Philip T. Kortum, et. al.	:	

This is a decision on the petition under 37 CFR 3.81 filed October 5, 2007, which is being treated as a request to add the name of the assignee on the front page of the above-identified patent by way of a Certificate of Correction. The delay in responding is regretted.

Since the requirements of 37 CFR 3.81(b) have been met, the request is **GRANTED.**

The Certificates of Correction Branch will be notified of this decision granting the petition under 37 CFR 3.81(b) and directing issuance of the requested Certificate of Correction.

Telephone inquiries concerning this decision may be directed to the undersigned at (571) 272-3226. Inquiries regarding the issuance of a Certificate of Correction should be directed to the Certificates of Correction Branch at (703) 305-8309.

Andrea Smith
Petitions Examiner
Office of Petitions

UNITED STATES PATENT AND TRADEMARK OFFICE

Commissioner for Patents
United States Patent and Trademark Office
P.O. Box 1450
Alexandria, VA 22313-1450
www.uspto.gov

JUL 20 2005

MORRISON & FOERSTER LLP
3811 VALLEY CENTRE DRIVE
SUITE 500
SAN DIEGO CA 92130-2332

In re Application of	:
Thomas L. Cantor et al	:
Serial No.: 10/617,489	: PETITION DECISION
Filed: July 10, 2003	:
Attorney Docket No.: 532212000623	:

This is a response to the petitions under 37 CFR 1.59(b), filed April 18, 2005, and May 19, 2005, to expunge information from the above identified application.

Petitioner requests that documents submitted April 18, 2005, and May 19, 2005, as Proprietary Information Disclosure Statements be expunged from the record. Petitioner states either: (A) that the information contains trade secret material, proprietary material and/or material that is subject to a protective order which has not been made public; or (B) that the information submitted was unintentionally submitted and the failure to obtain its return would cause irreparable harm to the party who submitted the information or to the party in interest on whose behalf the information was submitted, and the information has not otherwise been made public. The petition fee set forth in 37 CFR 1.17(h) has been paid.

This is an examined application and a reply to the last Office action has been filed. The information provided will be reviewed by the examiner in due course. As stated in M.P.E.P. 724, upon allowance or other action closing prosecution in an application petition may be made for return of Proprietary Information Disclosure Statements. This application has not been allowed. Therefore, the information cannot be returned at this time.

The petition is **DISMISSED**. Applicants may resubmit the petition subsequent to a Notice of Allowability or *ex parte Quayle* action being mailed in the application. No additional petition fee will be required at that time.

Should there be any questions with respect to this decision, please contact William R. Dixon, Jr., by mail addressed to: Director, Technology Center 1600, P.O. Box 1450, Alexandria, VA 22313-1450, or by telephone at 571-272-0519 or by facsimile transmission at general Office facsimile number, 571-273-8300.

George C. Elliott
Director, Technology Center 1600

UNITED STATES PATENT AND TRADEMARK OFFICE

Commissioner for Patents
United States Patent and Trademark Office
P.O. Box 1450
Alexandria, VA 22313-1450
www.uspto.gov

SEP 28 2005

MORRISON & FOERSTER LLP
3811 VALLEY CENTRE DRIVE
SUITE 500
SAN DIEGO CA 92130-2332

In re Application of Thomas L. Cantor et al Serial No.: 10/617,489 Filed: July 10, 2003 Attorney Docket No.: 532212000623	: PETITION TO MAKE SPECIAL

This is in response to the petition filed January 2, 2004, to make the above-identified application special under the provisions of 37 CFR 1.102(d). The delay in acting on this petition is regretted, however it was only recently discovered as unacted on.

Applicant has satisfied the provisions set forth in M.P.E.P. 708.02, XII. Therefor the petition is **GRANTED**.

The application will be forwarded to the examiner for action on the merits commensurate with this decision.

Should there be any questions with regard to this letter please contact William R. Dixon, Jr. by letter addressed to the Director, Technology Center 1600, P.O. Box 1450, Alexandria, VA 22313-1450, or by telephone at 571-272-0519 or by facsimile transmission to the Office general facsimile number, 571-273-8300.

William R. Dixon, Jr.
Special Program Examiner
Technology Center 1600

UNITED STATES PATENT AND TRADEMARK OFFICE

Commissioner for Patents
United States Patent and Trademark Office
P.O. Box 1450
Alexandria, VA 22313-1450
www.uspto.gov

OCT - 6 2005

MORRISON & FOERSTER LLP
3811 VALLEY CENTRE DRIVE
SUITE 500
SAN DIEGO CA 92130-2332

In re Application of	:
Thomas L. Cantor et al	:
Serial No.: 10/617,489	: PETITION DECISION
Filed: July 10, 2003	:
Attorney Docket No.: 532212000623	:

This is a response to the third petition under 37 CFR 1.59(b), filed August 5, 2005, to expunge additional information from the above identified application.

Petitioner requests that documents submitted August 5, 2005, as Proprietary Information Disclosure Statements be expunged from the record. Petitioner states either: (A) that the information contains trade secret material, proprietary material and/or material that is subject to a protective order which has not been made public; or (B) that the information submitted was unintentionally submitted and the failure to obtain its return would cause irreparable harm to the party who submitted the information or to the party in interest on whose behalf the information was submitted, and the information has not otherwise been made public. The petition fee set forth in 37 CFR 1.17(h) has been paid.

This is an examined application and a reply to the last Office action has been filed. The information provided will be reviewed by the examiner in due course. As stated in M.P.E.P. 724, upon allowance or other action closing prosecution in an application petition may be made for return of Proprietary Information Disclosure Statements. This application has not been allowed. Therefore, the information cannot be returned at this time.

The petition is **DISMISSED**. Applicants may resubmit the petition subsequent to a Notice of Allowability or *ex parte Quayle* action being mailed in the application. No additional petition fee will be required at that time.

Should there be any questions with respect to this decision, please contact William R. Dixon, Jr., by mail addressed to: Director, Technology Center 1600, P.O. Box 1450, Alexandria, VA 22313-1450, or by telephone at 571-272-0519 or by facsimile transmission at general Office facsimile number, 571-273-8300.

George C. Elliott
Director, Technology Center 1600

UNITED STATES PATENT AND TRADEMARK OFFICE

Commissioner for Patents
United States Patent and Trademark Office
P.O. Box 1450
Alexandria, VA 22313-1450
www.uspto.gov

JUL 21 2006

MORRISON & FOERSTER LLP
3811 VALLEY CENTRE DRIVE
SUITE 500
SAN DIEGO CA 92130-2332

In re Application of	:
Thomas L. Cantor et al	:
Serial No.: 10/617,489	: PETITION DECISION
Filed: July 10, 2003	:
Attorney Docket No.: 532212000623	:

This is a response to the petition under 37 CFR 1.59(b), filed May 3, 2006, to expunge information from the above identified application.

Petitioner requests that documents submitted May 3, 2006, as a third Proprietary Information Disclosure Statement be expunged from the record. Petitioner states either: (A) that the information contains trade secret material, proprietary material and/or material that is subject to a protective order which has not been made public; or (B) that the information submitted was unintentionally submitted and the failure to obtain its return would cause irreparable harm to the party who submitted the information or to the party in interest on whose behalf the information was submitted, and the information has not otherwise been made public. The petition fee set forth in 37 CFR 1.17(h) has been paid.

This is an examined application and a reply to the last Office action has been filed. The information provided will be reviewed by the examiner in due course. As stated in M.P.E.P. 724, upon allowance or other action closing prosecution in an application petition may be made for return of Proprietary Information Disclosure Statements. This application has not been allowed. Therefore, the information cannot be returned at this time.

The petition is **DISMISSED**. Applicants may resubmit the petition subsequent to a Notice of Allowability or *ex parte Quayle* action being mailed in the application. No additional petition fee will be required at that time.

Should there be any questions with respect to this decision, please contact William R. Dixon, Jr., by mail addressed to: Director, Technology Center 1600, P.O. Box 1450, Alexandria, VA 22313-1450, or by telephone at 571-272-0519 or by facsimile transmission at general Office facsimile number, 571-273-8300.

John L. LeGuyader
Director, Technology Center 1600

UNITED STATES PATENT AND TRADEMARK OFFICE

APR 3 2007

Commissioner for Patents
United States Patent and Trademark Office
P.O. Box 1450
Alexandria, VA 22313-1450
www.uspto.gov

MORRISON & FOERSTER LLP
12531 HIGH BLUFF DRIVE
SUITE 100
SAN DIEGO CA 92130-2040

In re Application of	:
Thomas L. Cantor	:
Serial No.: 10/617,489	: PETITION DECISION
Filed: July 10, 2003	:
Attorney Docket No.: 532212000623	:

This is a response to the petitions under 37 CFR 1.59(b), filed April 18, 2005, May 19, 2005, and July 7, 2005, to expunge information from the above identified application.

Petitioner requests that the Proprietary Information Disclosure Statement, filed on the above dates be expunged from the record. Petitioner states either: (A) that the information contains trade secret material, proprietary material and/or material that is subject to a protective order which has not been made public; or (B) that the information submitted was unintentionally submitted and the failure to obtain its return would cause irreparable harm to the party who submitted the information or to the party in interest on whose behalf the information was submitted, and the information has not otherwise been made public. The petition fee set forth in 37 CFR 1.17(h) has been paid.

This application has now been allowed. As such the information provided has been reviewed by the examiner and found not pertinent to rendering the application unpatentable. As stated in M.P.E.P. 724, upon allowance or other action closing prosecution in an application petition may be made for return of Proprietary Information Disclosure Statements.

The petition is **GRANTED**. **Because of the large number of documents, applicants are requested to have a local associate retrieve the documents from the undersigned.**

Should there be any questions with respect to this decision, please contact William R. Dixon, Jr., by mail addressed to: Director, Technology Center 1600, P.O. Box 1450, Alexandria, VA 22313-1450, or by telephone at 571-272-0519 or by facsimile transmission at general Office facsimile number, 571-273-8300.

William R. Dixon, Jr.
Special Program Examiner
Technology Center 1600

UNITED STATES PATENT AND TRADEMARK OFFICE

Commissioner for Patents
United States Patent and Trademark Office
P.O. Box 1450
Alexandria, VA 22313-1450
www.uspto.gov

COPY MAILED

FEB 04 2008

OFFICE OF PETITIONS

MORRISON & FOERSTER LLP
12531 HIGH BLUFF DRIVE, SUITE 100
SAN DIEGO, CA 92130-2040

In re Application of :
Thomas L. Cantor et al :
Application No. 10/617,489 : ON PETITION
Filed: July 10, 2003 :
Attorney Docket No. 532212000623

This is a decision on the petition, filed January 25, 2008 under 37 CFR 1.313(c)(2) to withdraw the above-identified application from issue after payment of the issue fee.

The petition is **GRANTED**.

The above-identified application is withdrawn from issue for consideration of a submission under 37 CFR 1.114 (request for continued examination). See 37 CFR 1.313(c)(2).

Petitioner is advised that the issue fee paid on April 4, 2007 in the above-identified application cannot be refunded. If, however, the above-identified application is again allowed, petitioner may request that it be applied towards the issue fee required by the new Notice of Allowance.[1]

Telephone inquiries should be directed to Irvin Dingle at (571) 272-3210.

This matter is being referred to Technology Center AU 1641 for processing of the request for continued examination under 37 CFR 1.114 and for consideration of the concurrently filed Information Disclosure Statement.

Irvin Dingle
Petitions Examiner
Office of Petitions

---

[1] The request to apply the issue fee to the new Notice may be satisfied by completing and returning the new Issue Fee Transmittal Form PTOL-85(b), which includes the following language thereon: Commissioner for Patents is requested to apply the Issue Fee and Publication Fee (if any) or re-apply any previously paid issue fee to the application identified above. Petitioner is advised that, whether a fee is indicated as being due or not, the Issue Fee Transmittal Form **must** be completed and timely submitted to avoid abandonment. Note the language in bold text on the first page of the Notice of Allowance and Fee(s) Due (PTOL-85).

UNITED STATES PATENT AND TRADEMARK OFFICE

Commissioner for Patents
United States Patent and Trademark Office
P.O. Box 1450
Alexandria, VA 22313-1450
www.uspto.gov

FEB 0 8 2008

MORRISON & FOERSTER LLP
12531 HIGH BLUFF DRIVE
SUITE 100
SAN DIEGO CA 92130-2040

In re Application of
Cantor et al.
Serial No.: 10/617,489
Filed: July 10, 3003
Attorney Docket No.: 532212000623

: PETITION DECISION

This is a response to the petition under 37 CFR 1.59(b), filed February 1, 2008, to expunge information from the above identified application.

Petitioner requests that the supplemental IDS filed February 1, 2008 having two documents set forth therein be expunged from the record. Petitioner states either: (A) that the information contains trade secret material, proprietary material and/or material that is subject to a protective order which has not been made public; or (B) that the information submitted was unintentionally submitted and the failure to obtain its return would cause irreparable harm to the party who submitted the information or to the party in interest on whose behalf the information was submitted, and the information has not otherwise been made public. The $200.00 petition fee set forth in 37 CFR 1.17(h) has been paid.

Applicants state the proprietary material submitted on Form PTO 1449 is "subject to protective order". Applicants also state that this information is confidential and should be expunged after examiner consideration if it is found not to be important in deciding whether to allow the application.

This is currently an examined application. The newly submitted IDS has not been reviewed and the petition cannot be granted at this time. As stated in M.P.E.P. 724, upon allowance or other action closing prosecution in an application, petition may be made for return of Proprietary information. However, the information cannot be expunged at this time.

The petition is **DISMISSED**. Applicant may resubmit the petition subsequent to a Notice of Allowability or *ex parte Quayle* action being mailed in the application. No additional petition fee will be required at that time.

Should there be any questions with respect to this decision, please contact Marianne C. Seidel, by mail addressed to: Director, Technology Center 1600, P.O. Box 1450, Alexandria, VA 22313-1450, or by telephone at 571-272-0584 or by facsimile transmission at general Office facsimile number, 703-872-9306.

Marianne C. Seidel
Quality Assurance Specialist/Program Manager
Technology Center 1600

UNITED STATES PATENT AND TRADEMARK OFFICE

Commissioner for Patents
United States Patent and Trademark Office
P.O. Box 1450
Alexandria, VA 22313-1450
www.uspto.gov

OCT 2 1 2008

MORRISON & FOERSTER LLP
12531 HIGH BLUFF DRIVE
SUITE 100
SAN DIEGO CA 92130-2040

In re Application of :
Cantor et al.
Serial No.: 10/617,489
Filed: July 10, 2003
Attorney Docket No.: **532212000623**

: PETITION DECISION

This is in response to the petitions under 37 CFR § 1.59(b), filed July 28, 2008 and September 30, 2008, to expunge information from the above identified application. This application has been allowed.

Petitioner requests that the seven documents filed with the Supplemental Information Disclosure Statement filed on July 28, 2008, as well as the 28 documents submitted with the Supplemental Information Disclosure Statement filed on September 29, 2008 be expunged from the record. Petitioner states either: (A) that the information contains trade secret material, proprietary material and/or material that is subject to a protective order which has not been made public; or (B) that the information submitted was unintentionally submitted and the failure to obtain its return would cause irreparable harm to the party who submitted the information or to the party in interest on whose behalf the information was submitted, and the information has not otherwise been made public. The petition fee set forth in 37 CFR § 1.17(g) has been paid.

The reasons set forth in this petition establishes to the satisfaction of the Director that expungement of the information is appropriate. The file entries for those documents have been closed and as such the documents are no longer publicly available, which is the IFW equivalent to removal of a paper document from a paper file wrapper.

Therefore, petitioner's petition is GRANTED.

Should there be any questions about this decision please contact Marianne C. Seidel by letter addressed to Director, TC 1600, at the address listed above, or by telephone at 571-272-0584 or by facsimile sent to the general Office facsimile number, 703-872-9306.

Marianne C. Seidel
Quality Assurance Specialist
Technology Center 1600

UNITED STATES PATENT AND TRADEMARK OFFICE

UNITED STATES DEPARTMENT OF COMMERCE
United States Patent and Trademark Office
Address: COMMISSIONER FOR PATENTS
P.O. Box 1450
Alexandria, Virginia 22313-1450
www.uspto.gov

APPLICATION NO.	FILING DATE	FIRST NAMED INVENTOR	ATTORNEY DOCKET NO.	CONFIRMATION NO.
10/617,489	07/10/2003	Thomas L. Cantor	532212000623	4476

25225 7590 12/15/2008
MORRISON & FOERSTER LLP
12531 HIGH BLUFF DRIVE
SUITE 100
SAN DIEGO, CA 92130-2040

EXAMINER
CHEU, CHANGHWA J

ART UNIT	PAPER NUMBER
1641	

MAIL DATE	DELIVERY MODE
12/15/2008	PAPER

Please find below and/or attached an Office communication concerning this application or proceeding.

The time period for reply, if any, is set in the attached communication.

UNITED STATES PATENT AND TRADEMARK OFFICE

Commissioner for Patents
United States Patent and Trademark Office
P.O. Box 1450
Alexandria, VA 22313-1450
www.uspto.gov

MORRISON & FOERSTER LLP
12531 HIGH BLUFF DRIVE
SUITE 100
SAN DIEGO CA 92130-2040

DEC 15 2008

In re Application of :
Cantor et al.
Serial No.: 10/617,489
Filed: July 10, 2003
Attorney Docket No.: **532212000623**

: PETITION DECISION

This is in response to the petition under 37 CFR § 1.59(b), filed December 5, 2008, to expunge information from the above identified application. This application has been allowed.

Petitioner requests that the 28 documents submitted with the Supplemental Information Disclosure Statement filed on September 29, 2008 be expunged from the record. Petitioner states either: (A) that the information contains trade secret material, proprietary material and/or material that is subject to a protective order which has not been made public; or (B) that the information submitted was unintentionally submitted and the failure to obtain its return would cause irreparable harm to the party who submitted the information or to the party in interest on whose behalf the information was submitted, and the information has not otherwise been made public. The petition fee set forth in 37 CFR § 1.17(g) has been paid.

The reasons set forth in this petition establishes to the satisfaction of the Director that expungement of the information is appropriate. The file entries for those documents have been closed and as such the documents are no longer publicly available, which is the IFW equivalent to removal of a paper document from a paper file wrapper.

Therefore, petitioner's petition is GRANTED.

Should there be any questions about this decision please contact Marianne C. Seidel by letter addressed to Director, TC 1600, at the address listed above, or by telephone at 571-272-0584 or by facsimile sent to the general Office facsimile number, 703-872-9306.

Marianne C. Seidel
Quality Assurance Specialist
Technology Center 1600

UNITED STATES PATENT AND TRADEMARK OFFICE

APR 03 2009

Commissioner for Patents
United States Patent and Trademark Office
P.O. Box 1450
Alexandria, VA 22313-1450
www.uspto.gov

MORRISON & FOERSTER LLP
12531 HIGH BLUFF DRIVE
SUITE 100
SAN DIEGO CA 92130-2040

In re Application of :
Cantor et al.
Serial No.: 10/617,489
Filed: July 10, 2003
Attorney Docket No.: **532212000623**

: PETITION DECISION

This is in response to the petition under 37 CFR § 1.59(b), filed March 27, 2009, to expunge information from the above identified application. This application has been allowed.

Petitioner requests that the 3 documents submitted with the Supplemental Information Disclosure Statement filed on March 26, 2009 be expunged from the record. Petitioner states either: (A) that the information contains trade secret material, proprietary material and/or material that is subject to a protective order which has not been made public; or (B) that the information submitted was unintentionally submitted and the failure to obtain its return would cause irreparable harm to the party who submitted the information or to the party in interest on whose behalf the information was submitted, and the information has not otherwise been made public. The petition fee set forth in 37 CFR § 1.17(g) has been paid.

The reasons set forth in this petition establishes to the satisfaction of the Director that expungement of the information is appropriate. The file entries for those documents have been closed and as such the documents are no longer publicly available, which is the IFW equivalent to removal of a paper document from a paper file wrapper.

Therefore, petitioner's petition is GRANTED.

Should there be any questions about this decision please contact Marianne C. Seidel by letter addressed to Director, TC 1600, at the address listed above, or by telephone at 571-272-0584 or by facsimile sent to the general Office facsimile number, 703-872-9306.

Marianne C. Seidel
Quality Assurance Specialist
Technology Center 1600

UNITED STATES PATENT AND TRADEMARK OFFICE

UNITED STATES DEPARTMENT OF COMMERCE
United States Patent and Trademark Office
Address: COMMISSIONER FOR PATENTS
P.O. Box 1450
Alexandria, Virginia 22313-1450
www.uspto.gov

APPLICATION NO.	FILING DATE	FIRST NAMED INVENTOR	ATTORNEY DOCKET NO.	CONFIRMATION NO.
10/617,489	07/10/2003	Thomas L. Cantor	532212000623	4476

25225 7590 08/28/2009
MORRISON & FOERSTER LLP
12531 HIGH BLUFF DRIVE
SUITE 100
SAN DIEGO, CA 92130-2040

EXAMINER
CHEU, CHANGHWA J

ART UNIT	PAPER NUMBER
1641	

MAIL DATE	DELIVERY MODE
08/28/2009	PAPER

Please find below and/or attached an Office communication concerning this application or proceeding.

The time period for reply, if any, is set in the attached communication.

UNITED STATES PATENT AND TRADEMARK OFFICE

Commissioner for Patents
United States Patent and Trademark Office
P.O. Box 1450
Alexandria, VA 22313-1450
www.uspto.gov

AUG 2 8 2009

MORRISON & FOERSTER LLP
12531 HIGH BLUFF DRIVE
SUITE 100
SAN DIEGO CA 92130-2040

In re Application of :
Cantor et al.
Serial No.: 10/617,489
Filed: July 10, 2003
Attorney Docket No.: **532212000623**

: PETITION DECISION

This is in response to the petition under 37 CFR § 1.59(b), filed August 21, 2009, to expunge information from the above identified application. This application has been allowed.

Petitioner requests that the 8 documents submitted with the Supplemental Information Disclosure Statement filed on December 6, 2007 be expunged from the record. Petitioner also requests that the 5 documents submitted with the Supplemental Information Disclosure Statement filed on August 5, 2005 be expunged from the record. Petitioner further requests that the 28 documents submitted with the Supplemental Information Disclosure Statement filed on May 3, 2006 be expunged from the record. Finally Petitioner requests that the 2 documents submitted with the Supplemental Information Disclosure Statement filed on February 1, 2008 be expunged from the record Petitioner states either: (A) that the information contains trade secret material, proprietary material and/or material that is subject to a protective order which has not been made public; or (B) that the information submitted was unintentionally submitted and the failure to obtain its return would cause irreparable harm to the party who submitted the information or to the party in interest on whose behalf the information was submitted, and the information has not otherwise been made public. The petition fee set forth in 37 CFR § 1.17(g) has been paid.

The reasons set forth in this petition establishes to the satisfaction of the Director that expungement of the information is appropriate. The file entries for those documents have been closed and as such the documents are no longer publicly available, which is the IFW equivalent to removal of a paper document from a paper file wrapper.

Therefore, petitioner's petition is GRANTED.

Should there be any questions about this decision please contact Marianne C. Seidel by letter addressed to Director, TC 1600, at the address listed above, or by telephone at 571-272-0584 or by facsimile sent to the general Office facsimile number, 703-872-9306.

Marianne C. Seidel
Quality Assurance Specialist
Technology Center 1600

UNITED STATES PATENT AND TRADEMARK OFFICE

Commissioner for Patents
United States Patent and Trademark Office
P.O. Box 1450
Alexandria, VA 22313-1450
www.uspto.gov

MORRISON & FOERSTER LLP
12531 HIGH BLUFF DRIVE
SUITE 100
SAN DIEGO, CA 92130-2040

MAILED

OCT 05 2009

OFFICE OF PETITIONS

In re Application of	:	
Thomas L.Cantor, et al.	:	
Application No.: 10/617,489	:	ON PETITION
Filed: July 10, 2003	:	
Attorney Docket No.: 532212000623	:	

This is a decision on the petition, filed October 1, 2009, under 37 CFR 1.313(c)(2) to withdraw the above-identified application from issue after payment of the issue fee.

The petition is **GRANTED**.

The above-identified application is withdrawn from issue for consideration of a submission under 37 CFR 1.114 (request for continued examination). See 37 CFR 1.313(c)(2).

Petitioner is advised that the issue fee paid on June 19, 2009, cannot be refunded. If, however, this application is again allowed, petitioner may request that it be applied towards the issue fee required by the new Notice of Allowance.[1]

Telephone inquiries relating to this decision should be directed to the undersigned at (571) 272-3204.

The application is being referred to Technology Center AU 1641 for further processing of the request for continued examination under 37 CFR 1.114 and for consideration of the concurrently filed Information Disclosure Statement (IDS).

/SDB/

Sherry D. Brinkley
Petitions Examiner
Office of Petitions

[1] *The request to apply the issue fee to the new Notice may be satisfied by completing and returning the new Part B – Fee(s) Transmittal Form (along with any balance due at the time of submission). Petitioner is advised that the Issue Fee Transmittal Form must be completed and timely submitted to avoid abandonment of the application.*

UNITED STATES PATENT AND TRADEMARK OFFICE

NOV 05 2009

Commissioner for Patents
United States Patent and Trademark Office
P.O. Box 1450
Alexandria, VA 22313-1450
www.uspto.gov

MORRISON & FOERSTER LLP
12531 HIGH BLUFF DRIVE
SUITE 100
SAN DIEGO CA 92130-2040

In re Application of :
Cantor et al.
Serial No.: 10/617,489
Filed: July 10, 2003
Attorney Docket No.: **532212000623**

: PETITION DECISION

This is in response to the petition under 37 CFR § 1.59(b), filed October 29, 2009, to expunge information from the above identified application. This application has not been allowed.

Petitioner requests that the documents submitted with the Supplemental Information Disclosure Statement filed on October 29, 2009 be expunged from the record. Petitioner states either: (A) that the information contains trade secret material, proprietary material and/or material that is subject to a protective order which has not been made public; or (B) that the information submitted was unintentionally submitted and the failure to obtain its return would cause irreparable harm to the party who submitted the information or to the party in interest on whose behalf the information was submitted, and the information has not otherwise been made public. The petition fee set forth in 37 CFR § 1.17(g) has been paid.

This is an examined application. As such the information provided has been reviewed, in part, but proceedings in the application have not been terminated. As stated in M.P.E.P. 724, upon allowance or other action closing prosecution in an application, petition may be made for return of Proprietary information. The information cannot be expunged at this time.

The petition is **DISMISSED**. Petitioner may resubmit the petition subsequent to a Notice of Allowability or *ex parte Quayle* action being mailed in the application. No additional petition fee will be required at that time.

Should there be any questions about this decision please contact Marianne C. Seidel by letter addressed to Director, TC 1600, at the address listed above, or by telephone at 571-272-0584 or by facsimile sent to the general Office facsimile number, 703-872-9306.

Marianne C. Seidel
Quality Assurance Specialist
Technology Center 1600

APPLICATION NO.	FILING DATE	FIRST NAMED INVENTOR	ATTORNEY DOCKET NO.	CONFIRMATION NO.
10/617,489	07/10/2003	Thomas L. Cantor	532212000623	4476

25225 7590 03/05/2010
MORRISON & FOERSTER LLP
12531 HIGH BLUFF DRIVE
SUITE 100
SAN DIEGO, CA 92130-2040

EXAMINER
CHEU, CHANGHWA J

ART UNIT	PAPER NUMBER
1641	

MAIL DATE	DELIVERY MODE
03/05/2010	PAPER

Please find below and/or attached an Office communication concerning this application or proceeding.

The time period for reply, if any, is set in the attached communication.

UNITED STATES PATENT AND TRADEMARK OFFICE

Commissioner for Patents
United States Patent and Trademark Office
P.O. Box 1450
Alexandria, VA 22313-1450
www.uspto.gov

MORRISON & FOERSTER LLP
12531 HIGH BLUFF DRIVE
SUITE 100
SAN DIEGO CA 92130-2040

MAR 0 5 2010

In re Application of:
Cantor et al.
Serial No.: 10/617,489
Filed: July 10, 2003
Attorney Docket No.: **532212000623**

: PETITION DECISION

This is in response to the renewed petition under 37 CFR § 1.59(b), filed February 26, 2010, to expunge information from the above identified application. This application has been allowed.

Petitioner requests that the documents submitted with the Supplemental Information Disclosure Statement filed on October 29, 2009 be expunged from the record. Petitioner states either: (A) that the information contains trade secret material, proprietary material and/or material that is subject to a protective order which has not been made public; or (B) that the information submitted was unintentionally submitted and the failure to obtain its return would cause irreparable harm to the party who submitted the information or to the party in interest on whose behalf the information was submitted, and the information has not otherwise been made public. The petition fee set forth in 37 CFR § 1.17(g) has been paid.

The reasons set forth in this petition establishes to the satisfaction of the Director that expungement of the information is appropriate. The file entry for this document has been closed and as such the document is no longer publicly available, which is the IFW equivalent to removal of a paper document from a paper file wrapper.

Therefore, petitioner's petition is GRANTED.

Should there be any questions about this decision please contact Marianne C. Seidel by letter addressed to Director, TC 1600, at the address listed above, or by telephone at 571-272-0584 or by facsimile sent to the general Office facsimile number, 703-872-9306.

Marianne C. Seidel
Quality Assurance Specialist
Technology Center 1600

UNITED STATES PATENT AND TRADEMARK OFFICE

UNITED STATES DEPARTMENT OF COMMERCE
United States Patent and Trademark Office
Address: COMMISSIONER FOR PATENTS
P.O. Box 1450
Alexandria, Virginia 22313-1450
www.uspto.gov

APPLICATION NO.	FILING DATE	FIRST NAMED INVENTOR	ATTORNEY DOCKET NO.	CONFIRMATION NO.
10/617,489	07/10/2003	Thomas L. Cantor	532212000623	4476

25225 7590 03/09/2010
MORRISON & FOERSTER LLP
12531 HIGH BLUFF DRIVE
SUITE 100
SAN DIEGO, CA 92130-2040

EXAMINER
CHEU, CHANGHWA J

ART UNIT	PAPER NUMBER
1641	

MAIL DATE	DELIVERY MODE
03/09/2010	PAPER

Please find below and/or attached an Office communication concerning this application or proceeding.

The time period for reply, if any, is set in the attached communication.

UNITED STATES PATENT AND TRADEMARK OFFICE

Commissioner for Patents
United States Patent and Trademark Office
P.O. Box 1450
Alexandria, VA 22313-1450
www.uspto.gov

MORRISON & FOERSTER LLP
12531 HIGH BLUFF DRIVE
SUITE 100
SAN DIEGO CA 92130-2040

In re Application of:	:
Cantor et al.	: PETITION DECISION
Serial No.: 10/617,489	:
Filed: July 10, 2003	:
Attorney Docket No.: **532212000623**	

This is in response to the renewed petition under 37 CFR § 1.59(b), filed February 25, 2010, to expunge information from the above identified application. This application has been allowed.

Petitioner requests that the documents submitted with the Supplemental Information Disclosure Statement filed on February 25, 2010 be expunged from the record. Petitioner states either: (A) that the information contains trade secret material, proprietary material and/or material that is subject to a protective order which has not been made public; or (B) that the information submitted was unintentionally submitted and the failure to obtain its return would cause irreparable harm to the party who submitted the information or to the party in interest on whose behalf the information was submitted, and the information has not otherwise been made public. The petition fee set forth in 37 CFR § 1.17(g) has been paid.

The reasons set forth in this petition establishes to the satisfaction of the Director that expungement of the information is appropriate. The file entry for this document has been closed and as such the document is no longer publicly available, which is the IFW equivalent to removal of a paper document from a paper file wrapper.

Therefore, petitioner's petition is GRANTED.

Should there be any questions about this decision please contact Marianne C. Seidel by letter addressed to Director, TC 1600, at the address listed above, or by telephone at 571-272-0584 or by facsimile sent to the general Office facsimile number, 703-872-9306.

Marianne C. Seidel
Quality Assurance Specialist
Technology Center 1600

UNITED STATES PATENT AND TRADEMARK OFFICE

Commissioner for Patents
United States Patent and Trademark Office
P.O. Box 1450
Alexandria, VA 22313-1450
www.uspto.gov

Douglas J. Hura, Esquire
DENTSPLY INTERNATIONAL INC.
570 West College Avenue
York PA 17405

COPY MAILED

SEP 0 2 2008

OFFICE OF PETITIONS

In re Application of	:	
Klee, et al.	:	
Application No. 10/617,503	:	ON PETITION
Filed: July 11, 2003	:	
Attorney Docket No. KON-76B	:	

This is a decision on the petition under the unintentional provisions of 37 CFR 1.137(b), filed June 6, 2008, to revive the above-identified application.

The petition is GRANTED.

The application became abandoned January 18, 2007 for failure to timely submit a proper reply to the final Office action mailed October 17, 2006. The final Office action set a three month shortened statutory period of time for reply. No petition for extension of time was timely requested. Notice of Abandonment was mailed June 4, 2007.

A grantable petition under 37 CFR 1.137(b) must be accompanied by: (1) the required reply, unless previously filed; (2) the petition fee as set forth in 37 CFR 1.17(m); (3) a statement that the entire delay in filing the required reply from the due date for the reply until the filing of a grantable petition pursuant to 37 CFR 1.137(b) was unintentional; and (4) any terminal disclaimer (and fee as set forth in 37 CFR 1.20(d)) required by 37 CFR 1.137(d). Where there is a question as to whether either the abandonment or the delay in filing a petition under 37 CFR 1.137 was unintentional, the Director may require additional information. *See*, MPEP 711.03(c)(II)(C) and (D).

The instant application has been carefully reviewed and found in compliant with the above set forth requirements.

The application is being revived solely for purposes of continuity with continuation application number 12/156,794. As continuity has been established by this decision reviving the application, the application is again abandoned in favor of a continuation application under 37 CFR 1.53(b).

An extension of time under 37 CFR 1.136 must be filed prior to the expiration of the maximum extendable period for reply. *See* In re Application of S., 8 USPQ2d 1630, 1631 (Comm'r Pats. 1988). Since the $1,050.00 extension of time fee submitted with the petition was subsequent to the maximum extendable period for reply, this fee is being refunded to petitioners' deposit account.

Telephone inquiries concerning this decision should be directed to the undersigned at (571) 272-3205.

Alesia M. Brown
Petitions Attorney
Office of Petitions

UNITED STATES PATENT AND TRADEMARK OFFICE

Commissioner for Patents
United States Patent and Trademark Office
P.O. Box 1450
Alexandria, VA 22313-1450
www.uspto.gov

RICHARD A. RYAN
ATTORNEY AT LAW
8497 N. MILLBROOK AVENUE
SUITE 101
FRESNO CA 93720

COPY MAILED

JUL 18 2007

OFFICE OF PETITIONS

In re Application of	:	
Hamilton, James C.	:	
Application No. 10/617,534	:	ON PETITION
Filed: July 11, 2003	:	
Attorney Docket No. RAR461.01	:	

This is a decision on the petition under 37 C.F.R. § 1.137(b), filed June 15, 2007, to revive the above-identified application.

The petition is **GRANTED.**

The petition satisfies the conditions for revival pursuant to the provisions of 37 CFR 1.137(b) in that (1) the reply in the form of an Amendment; (2) the petition fee; and (3) the required statement of unintentional delay have been received. Accordingly, the response has been accepted as having been unintentionally delayed.

The above-identified application has been abandoned for an extended period of time. The Patent and Trademark Office is relying on petitioner's duty of candor and good faith and accepting the statement that the entire delay in filing the required reply from the due date for the reply until the filing of a grantable petition pursuant to 37 CFR 1.137(b) was unintentional.[1]

This matter is being referred to Technology Center 1700 for further examination on the merits.

Telephone inquiries regarding this decision should be directed to the undersigned at (571) 272-3206.

Liana Walsh
Petitions Examiner
Office of Petitions

---

[1] See Changes to Patent Practice and Procedure, 62 Fed. Reg. at 53160 and 53178; 1203 Off. Gaz. Pat. Office at 88 and 103 (responses to comments 64 and 109) (applicant obligated under 37 CFR 10.18 to inquire into the underlying facts and circumstances when providing the statement required by 37 CFR 1.137(b) to the Patent and Trademark Office).

UNITED STATES PATENT AND TRADEMARK OFFICE

Commissioner for Patents
United States Patent and Trademark Office
P.O. Box 1450
Alexandria, VA 22313-1450
www.uspto.gov

COOLEY GODWARD LLP
ATTN: PATENT GROUP
11951 FREEDOM DRIVE, SUITE 1700
ONE FREEDOM SQUARE- RESTON TOWN CENTER
RESTON VA 20190-5061

COPY MAILED

SEP 2 1 2005

OFFICE OF PETITIONS

In re Application of	:
Nieto Gil et al.	:
Application No. 10/617,538	: DECISION ON PETITIONS
Filed: July 11, 2003	: UNDER 37 CFR 1.78(a)(3)
Attorney Docket No. FICO-002/00US	: AND UNDER 37 CFR 1.55(C)

This is a decision on the petitions under 37 CFR 1.78(a)(3) and 37 CFR 1.55(c), filed September 12, 2005, to accept an unintentionally delayed claim under 35 U.S.C. §§ 120 and 365(c) for the benefit of prior-filed PCT Application No. PCT/EP02/00596, filed January 22, 2002, and under 35 U.S.C. § 119(a)-(d) for the benefit of prior-filed German Application No. 10102685.4, filed January 22, 2001, as set forth in the concurrently filed amendment.

The petitions are **GRANTED**.

As to the benefit claim under 37 CFR 1.78(a)(3):

A petition for acceptance of a claim for late priority under 37 CFR 1.78(a)(3) is only applicable to those applications filed on or after November 29, 2000. Further, the petition is appropriate only after the expiration of the period specified in 37 CFR 1.78(a)(2)(ii). In addition, the petition under 37 CFR 1.78(a)(3) must be accompanied by:

(1) the reference required by 35 U.S.C. § 120 and 37 CFR 1.78(a)(2)(i) of the prior-filed application, unless previously submitted;
(2) the surcharge set forth in § 1.17(t); and
(3) a statement that the entire delay between the date the claim was due under 37 CFR 1.78(a)(2)(ii) and the date the claim was filed was unintentional. The Commissioner may require additional information where there is a question whether the delay was unintentional.

The instant nonprovisional application was filed after November 29, 2000, and the claim herein for the benefit of priority to the prior-filed applications is submitted after expiration of the period specified in 37 CFR 1.78(a)(2)(ii). Also, the reference to the prior-filed applications was submitted during the pendency of the instant nonprovisional application, for which the claim for benefit of priority is sought. *See* 35 U.S.C. §§ 120 and 365(c). Accordingly, having found that the instant petition for acceptance of an unintentionally delayed claim for the benefit of priority under 35 U.S.C. §§ 120 and 365(c) to the prior-filed applications satisfies the conditions of 37 CFR 1.78(a)(3), the petition is granted.

As to the benefit claim under 37 CFR 1.55(c):

A petition under 37 CFR 1.55(c) to accept an unintentionally delayed claim for priority requires:

(1) The nonprovisional application claiming the benefit of an earlier filing date must be filed on or after November 29, 2000;
(2) the claim submitted with the petition must identify the prior foreign application for which priority is claimed, as well as any foreign application for the same

subject matter and having a filing date before that of the application for which priority is claimed, by the application number, country, and the filing date;

(3) the surcharge as set forth in 37 CFR 1.17(t);

(4) a statement that the entire delay between the date the claim was due under 37 CFR 1.55(a)(1) and the date the claim was filed was unintentional. (The Commissioner may require additional information where there is a question whether the delay was unintentional.); and

(5) the above-identified nonprovisional application must be filed within 12 months of the filing date of the foreign application.

The intermediate PCT application was filed within 12 months of January 22, 2001, which is the earliest filing date of the foreign application to which benefit is claimed. The declaration filed on January 24, 2005, also identifies the foreign application for which priority is claimed.

A certified copy of the foreign patent document is included. Petitioner submitted the petition fee of $1370.00. Lastly, petitioner has provided an adequate statement of unintentional delay.

All requirements being met, the petition under 37 CFR 1.55(c) to accept an unintentionally delayed claim for priority under 35 U.S.C. § 119(a)-(d) is granted.

A corrected Filing Receipt, which includes the priority claim to the prior-filed applications, and the foreign priority claim, accompanies this decision on petition.

The granting of the petition to accept the delayed benefit claim to the prior-filed applications under 37 CFR 1.78(a)(3) and 37 CFR 1.55(c) should not be construed as meaning that the instant application is entitled to the benefit of the prior-filed applications. In order for the instant application to be entitled to the benefit of the prior-filed applications, all other requirements under 35 U.S.C. §§ 120, 365(c) and 119(a)-(d) and 37 CFR 1.78(a)(1) and (a)(2) must be met. Similarly, the fact that the corrected Filing Receipt accompanying this decision on petition includes the prior-filed applications should not be construed as meaning that applicant is entitled to the claim for benefit of priority to the prior-filed applications noted thereon. Accordingly, the examiner will, in due course, consider this benefit claim and determine whether the instant application is entitled to the benefit of the earlier filing date.

Any inquiries concerning this decision may be directed to the undersigned at (571) 272-3206.

This matter is being referred to Technology Center Art Unit 3683 for consideration by the examiner of applicant's entitlement to claim benefit of priority under 35 U.S.C. §§ 120 and 365(c) to the prior-filed PCT application and for consideration of the claim for priority under 35 U.S.C. § 119 for the benefit of the foreign application as set forth in the concurrently filed amendment and declaration, respectively.

Liana Chase

Liana Chase
Petitions Examiner
Office of Petitions
Office of the Deputy Commissioner
for Patent Examination Policy

ATTACHMENT: Corrected Filing Receipt

UNITED STATES PATENT AND TRADEMARK OFFICE

Commissioner for Patents
United States Patent and Trademark Office
P.O. Box 1450
Alexandria, VA 22313-1450
www.uspto.gov

JJGJr: 11-05

Paper No: __

COOLEY GODWARD LLP
ATTN: PATENT GROUP
11951 FREEDOM DRIVE, SUITE 1700
ONE FREEDOM SQUARE- RESTON TOWN CENTER
RESTON VA 20190-5061

COPY MAILED

NOV 2 2 2005

OFFICE OF PETITIONS

In re Application of	:	
Nieto Gil et al.	:	
Application No. 10/617,538	:	DECISION ON PETITION
Filed: 11 July, 2003	:	
Attorney Docket No.: FICO-002/00US	:	

This is a decision on the petition filed on 24 January, 2005, under 37 C.F.R. §1.47(a).

The petition is **GRANTED**.

BACKGROUND AND ANALYSIS

The record reflects that:

- the instant application was filed on 11 July, 2003, absent, *inter alia*, a fully executed oath/declaration;
- on23 June, 2004, the Office mailed a Notice of Missing Parts, indicating therein, *inter alia*, a two-month period for reply absent extension of time;
- on 24 January, 2005, Petitioner James P. Brogan (Reg. No. 35,833) filed (with a request and fee for extension of time) an oath/declaration signed by co-inventor Jaune Prat

Terradas (on behalf of himself and), but without the signature of non-signing inventor Sergio Nieto Gil (Mr. Nieto Gil), and with a statement by Petitioner as to the process of sending the entire application (description, claims, abstract and drawings) for review, with the oath/declaration for signature, supported said statement with a copy of the transmittal letters, and set forth the averred last known and valid current address of the non-signing inventor.

Lastly, Petitioner has submitted a declaration in compliance with 37 C.F.R. §1.63 and §1.64 and Petitioner has shown that such action is necessary to prevent irreparable damage.

This application and papers have been reviewed and found in compliance with 37 C.F.R. §1.47(a).

This application hereby is **ACCORDED status under 37 C.F.R. §1.47(a)**.

As provided under 37 C.F.R. §1.47(a), the Office will forward notice of this application's filing to the non-signing inventor at the address given in the petition.

Notice of the filing of this application also will be published in the Official Gazette.

This file is released to OIPE for processing as necessary to reflect the instant decision before being released for further examination in due course.

Telephone inquiries concerning this decision may be directed to the undersigned at (571) 272-3214.

John J. Gillon, Jr.
Senior Attorney
Office of Petitions

UNITED STATES PATENT AND TRADEMARK OFFICE

COMMISSIONER FOR PATENTS
UNITED STATES PATENT AND TRADEMARK OFFICE
P.O. BOX 1450
ALEXANDRIA, VA 22313-1450
WWW.USPTO.GOV

Paper No. None

James E. Harris
MARGER JOHNSON & McCOLLOM, P.C
1030 S.W. Morrison Street
Portland OR 97205

COPY MAILED
MAR 01 2004
OFFICE OF PETITIONS

In re Application of
Steven M. Madey et al.
Application No. 10/617,544
Filed: July 10, 2003
Attorney Docket No. 5827-002
Title: LOAD DIVERSION METHOD AND APPARATUS FOR HEAD PROTECTIVE DEVICES

DECISION ON PETITION
UNDER 37 C.F.R. §1.53(e)

This is a decision on the "petition for restoration of filing date and request for petition refund", filed November 24, 2003, requesting the application, including ten (10) sheets of drawings be accorded a filing date of July 10, 2003 as part of the original disclosure.

The application was deposited on July 10, 2003. However, on November 5, 2003, the Office of Initial Patent Examination (OIPE) mailed a "Notice of Incomplete Nonprovisional Application" (Notice), stating that the application had NOT been accorded a filing date, and advising applicants that the application was deposited without drawings, and a filing date would be accorded when the drawings were received.

In response, on November 24, 2003, applicants filed the present petition. The petition is further accompanied by a copy of ten (10) sheets of drawings containing figures one through fourteen (1-14), along with a copy of applicants' postcard receipt acknowledging receipt of "10 sheets of informal drawings" in the United States Patent and Trademark Office (Office) on July 10, 2003. Applicants request that the application, including ten (10) sheets of drawings, be accorded a filing date of July 10, 2003.

Upon review of the record, the above-mentioned figures have not been located among the application papers. However, the evidence is convincing that the application papers deposited on July 10, 2003 included ten (10) sheets of drawings, and these ten (10) sheets of drawings were subsequently misplaced in the Office.

Therefore, the application, including ten (10) sheets of drawings, was complete on filing and entitled to a filing date of July 10, 2003 as part of the original disclosure.

Accordingly, the petition is **GRANTED**.

The notice mailed November 5, 2003 was sent in error, and is hereby **VACATED**. Therefore, no petition fee is necessary. The petition fee of $130 will be refunded to petitioner's Deposit Account.

The application file is being returned to the Office of Initial Patent Examination for further processing with a filing date of July 10, 2003, using the original application papers filed on that date, as well as the (10) sheets of drawings submitted on November 24, 2003.

Any inquiries related to this decision should be directed to the undersigned at (703) 305-0011.

Paul Shanoski
Attorney
Office of Petitions
United States Patent and Trademark Office

UNITED STATES PATENT AND TRADEMARK OFFICE

Commissioner for Patents
United States Patent and Trademark Office
P.O. Box 1450
Alexandria, VA 22313-1450
www.uspto.gov

GENERAL ELECTRIC COMPANY
GLOBAL RESEARCH
PATENT DOCKET RM. BLDG. K1-4A59
NISKAYUNA NY 12309

COPY MAILED

DEC 20 2007

OFFICE OF PETITIONS

In re Application of	:
Michael John Bowman et al	:
Application No. 10/617,548	: DECISION GRANTING PETITION
Filed: July 10, 2003	: UNDER 37 CFR 1.137(b)
Attorney Docket No. 134195	:

This is a decision on the petition under 37 CFR 1.137(b), filed May 23, 2007, to revive the above-identified application.

The petition is **GRANTED**.

The petition satisfies the conditions for revival pursuant to the provisions of 37 CFR 1.137(b) in that (1) the reply in the form of an amendment; (2) the petition fee; and (3) the required statement of unintentional delay have been received. Accordingly, the reply to the Final Rejection of August 30, 2006, is accepted as having been unintentionally delayed.

Telephone inquiries concerning this decision should be directed to the undersigned at (571) 272-3208.

This matter is being referred to Technology Center AU 1754.

Karen Creasy

Karen Creasy
Petitions Examiner
Office of Petitions

UNITED STATES PATENT AND TRADEMARK OFFICE

Commissioner for Patents
United States Patent and Trademark Office
P.O. Box 1450
Alexandria, VA 22313-1450
www.uspto.gov

MCANDREWS HELD & MALLOY, LTD
500 WEST MADISON STREET
SUITE 3400
CHICAGO IL 60661

MAILED

APR 2 6 2010

OFFICE OF PETITIONS

In re Patent No. 7,133,772 :
Issue Date: November 7, 2006 :
Application No. 10/617,559 : NOTICE
Filed: July 14, 2003 :
Attorney Docket No. 18950US02 :

This is a notice regarding your request for acceptance of a fee deficiency submission under 37 CFR 1.28 filed March 2, 2010. On September 1, 1998, the Court of Appeals for the Federal Circuit held that 37 CFR 1.28(c) is the sole provision governing the time for correction of the erroneous payment of the issue fee as a small entity. **See DH Technology v. Synergystex International, Inc. 154 F.3d 1333, 47 USPQ2d 1865 (Fed. Cir. Sept. 1, 1998).**

The Office no longer investigates or rejects original or reissue applications under 37 CFR 1.56. **1098 Off. Gaz. Pat. Office 502 (January 3, 1989)**. Therefore, nothing in this Notice is intended to imply that an investigation was done.

Your fee deficiency submission under 37 CFR 1.28 filed on May 23, 2007 is hereby accepted. The petition is **GRANTED**.

This application is no longer entitled to small entity status. Accordingly, all future fees paid in this application must be paid at the large entity rate.

This file is being forwarded to Files Repository.

Telephone inquiries related to this decision should be directed to the Kimberly Inabinet at (571) 272-4618.

/Kimberly Inabinet/

Kimberly Inabinet
Petitions Examiner
Office of Petitions

UNITED STATES PATENT AND TRADEMARK OFFICE

FEB 22 2007

Commissioner for Patents
United States Patent and Trademark Office
P.O. Box 1450
Alexandria, VA 22313-1450
www.uspto.gov

PATENT DEPARTMENT
TAYLOR, PORTER, BROOKS & PHILLIPS, L.L.P
P.O. BOX 2471
BATON ROUGE, LA 70821-2471

In re Application of	:
Frederick M. Enright et al.	:
Serial No.: 10/617,561	: PETITION DECISION
Filed: July 11, 2003	:
Attorney Docket No.: 96A3.3 Enright	:

This is in response to the petition under 37 CFR 1.144, filed September 18, 2006, requesting withdrawal of an improper restriction requirement. The delay in acting upon this petition is regretted.

BACKGROUND

A review of the file history shows that this application was filed on July 11, 2003, under 35 U.S.C. 111(a). The examiner mailed to applicants on May 31, 2006, a restriction requirement, wherein five distinct inventions (Groups I-V) were identified and rationale set forth establishing the examiner's position. The claims were restricted as follows:

I. Claims 1-8, 11-14, 17, 127, 129 and 130, drawn to a DNA molecule encoding a fusion peptide, classified in class 536, subclass 23.1.

II. Claims 31-41, 105-114, 120 and 122, drawn to a method for decreasing fertility in an animal, classified in class 514, subclass 12.

III. Claims 48, 59-70, 73-76, 79, 83, 86-87, 123, 125, 126 and 128, drawn to a method for killing or inhibiting the growth of a cell in a hormone-dependent or ligand-dependent tumor in a mammal, classified in class 514, subclass 12.

IV. Claims 116 and 118, drawn to a method a method for selectively reducing the number of viable gonadotrophic cells in the pituitary of an animal, classified in class 514, subclass 12.

V. Claims 131-133, drawn to a vector wherein the DNA molecule is operatively linked to an acute-phase responsive promoter, classified in class 435, subclass 320.1.

Applicants' replied on July 5, 2006, electing Group I (claims 1-8, 11-14, 17, 127, 129 and 130), with traverse. Applicants argued that restriction between Groups I-V is improper because the Office has not established that Group I is distinct from any of the other groups and has not established that a serious burden would be placed on the examiner if restriction is not required.

The examiner mailed a new Office action on August 18, 2006, acknowledging the election of Group I and the traversal. The examiner maintained the requirement and made it Final on the basis that Groups I-V were distinct and searches for the inventions were not coextensive. Claims 31-41, 48, 59-70, 73-76, 79, 83, 86-87, 105-114, 116, 118, 120, 122-126, 128 and 131-133 were withdrawn from further consideration pursuant to 37 CFR 1.142(b), as being drawn to a nonelected invention. Claims 1-8, 11-14, 17, 127, 129 and 130 were rejected on the ground of nonstatutory double patenting over claims 1-109 of US 6,635,740. Claims 129 and 130 were rejected under 35 U.S.C. 101 as being drawn to non-statutory subject matter. Claims 1-8, 11-14, 17, 127, 129 and 130 under 35 U.S.C. 112, first paragraph, for failing to comply with the written description requirement and for containing new matter. Claims 129 and 130 were rejected under 35 U.S.C. 112, first paragraph, for lack of enablement.

Applicants filed this petition on September 18, 2006, asking review of the restriction requirement.

On February 14, 2007, a response and amendment was filed.

DISCUSSION

The petition and filed history have been carefully considered.

Applicants argue that the examiner has not demonstrated that the inventions are independent or distinct. Applicants contend that the examiner's rationale for restricting the method claims of Groups II, III and IV from the DNA sequences claims of Group I was improper (the examiner contends that the method claims of each of Groups II, III and IV were distinct from the product claims of Group I because the processes as claimed might be practiced with another, materially different product). Applicants further assert that the restriction requirement is improper because the examiner incorrectly concluded that Groups I and V are related as a product and process of use.

Applicants are correct in that inventions of Groups I-V are not independent. The inventions are "independent" (i.e., unrelated) if there is no disclosed relationship between the two or more inventions claimed, that is, they are unconnected in design, operation, and effect. In the instant case, such a relationship exists between the claims of Group I and Groups II-IV. As set forth by the examiner, Groups II, III and IV are methods employing the product of Group I. The examiner's contention that Groups I and V are related as a product and method of use is incorrect. Groups V and I are related as a combination/subcombination.

Where two or more related invention are claimed, the principal question to be determined in connection with a requirement to restrict is whether or not the inventions as claimed are distinct. In applications claiming inventions in different statutory categories, only one-way distinctness is

generally needed to support a restriction requirement. See MPEP § 806.05(c) (combination and subcombination) and § 806.05(j) (related products or related processes) for examples of when a two-way test is required for distinctness. A product and a process of using the product can be shown to be distinct inventions if either or both of the following can be shown: (A) the process of using as claimed can be practiced with another materially different product; or (B) the product as claimed can be used in a materially different process. In the instant case, the product of Group I can be used: 1) in a method for decreasing fertility in an animal or 2) in a method for killing or inhibiting the growth of a cell in a hormone-dependent or ligand-dependent tumor in a mammal. Thus, product claims of Group I are distinct from the methods of Groups II, III and IV.

Groups V and I are related as a combination/subcombination. M.P.E.P. § 806.05(c) states that:

> [t]he inventions are distinct if it can be shown that a combination as claimed:
> (A) does not require the particulars of the subcombination as claimed for patentability (to show novelty and unobviousness), and
> (B) the subcombination can be shown to have utility either by itself or in another materially different combination.

Although Group I has utility by itself for encoding a peptide in vitro for affinity purification of antibodies or for diagnostic testing for hormone levels, Group V requires "a DNA sequence as recited in Claim 1" and thus requires the particulars of the subcombination of Group I. Therefore, Groups I and V are not distinct and cannot be restricted.

Groups II, III and IV are drawn to related processes. To support a requirement for restriction between two or more related product inventions, or between two or more related process inventions, both two-way distinctness and reasons for insisting on restriction are necessary, i.e., separate classification, status in the art, or field of search. Related process inventions are distinct if:

> (A) the inventions as claimed do not overlap in scope, i.e., are mutually exclusive;
> (B) the inventions as claimed are not obvious variants; and
> (C) the inventions as claimed are either not capable of use together or can have a materially different design, mode of operation, function, or effect.

The claims of Groups II and IV are not mutually exclusive. The preamble language of the claims has been noted (method for decreasing fertility vs. method for selectively reducing the number of viable gonadotrophic cells); however, artisans of ordinary skill may not recognize the inherent characteristics or functioning of an invention. In construing process claims, it is the identity of manipulative operations which distinguishes the claims. In the instant case, it does not appear that the claim language or limitations result in a manipulative difference in the method steps of the claims. Groups II and IV recite the same, singular methodological step of "administering to the animal an effective amount of a DNA sequence encoding a peptide, wherein said peptide comprises a first domain and a second domain...and (b) the second domain comprises a lytic peptide". Reducing fertility in the animal is not an active methodological step in the process but is rather a consequence of reducing the number of viable gonadotrophic cells in the pituitary of the animal.

Although it is not required that artisans of ordinary skill in the art recognize the inherent functions of invention, Groups II and IV are obvious variants. It would have been obvious to one of ordinary skill in the art at the time of the invention that reducing the number of viable gonadotrophic cells in the pituitary of an animal would decrease said animal's fertility as gonadotrophic cells play an important role in normal reproduction. Groups II and IV cannot be restricted.

In regards to Groups II and III, the inventions do not overlap in scope as Group III is drawn to treating a mammal having a hormone-dependent or ligand-dependent tumor. Group II does not require the mammal to have a tumor; thus, the patient populations are not coextensive. The inventions are not obvious variants. One of ordinary skill in the art at the time of the invention would not have had a reasonable expectation of success in treating a tumor by employing a method to decrease fertility or vice versa. The methods of Groups II and III also have different effects. The effect of Group II is a decrease in fertility in the mammal treated. The effect of Group III is inhibition or death of a tumor cell in the mammal treated. Thus, Groups II and III are distinct. For the same reasons, Groups III and IV are distinct.

The product of Group V is unrelated to the methods of Groups II-IV as said methods do not employ the vector of Group V; however, this point is rendered moot since Groups I and V are rejoined.

Applicants' argument that search and examination of Groups II, III and IV would not be unduly burdensome because Groups II, III and IV fall within the same class and subclass is noted. As set forth supra, Groups II and IV cannot be restricted and have been rejoined; however, searching a method for decreasing fertility in an animal and a method of killing or inhibiting the growth of a cell in a hormone-dependent or ligand-dependent tumor in a mammal are not coextensive, which would impose a serious burden on the examiner.

DECISION

The petition is **GRANTED-IN-PART** for the reasons set forth above. Groups I and V are rejoined and will be examined together. Groups II and IV are rejoined. The claims are now restricted into three groups as follows:

I. Claims 1-8, 11-14, 17, 127, 129 and 130-133, drawn to a DNA molecule encoding a fusion peptide, classified in class 536, subclass 23.1.

II. Claims 31-41, 105-114, 116, 118, 120 and 122, drawn to a method comprising administering to an animal an effective amount of a DNA sequence encoding peptide wherein said peptide comprises a first domain and a second domain, classified in class 514, subclass 12.

III. Claims 48, 59-70, 73-76, 79, 83, 86-87, 123, 125, 126 and 128, drawn to a method comprising administering an effective amount of a DNA sequence encoding peptide wherein said peptide comprises a first domain and a second domain to an animal having a hormone-dependent or ligand-dependent tumor, classified in class 514, subclass 12.

The application will be forwarded to the examiner to consider the response and amendment filed 14 February 2007 and for further action consistent with this decision.

Should there be any questions about this decision, please contact Quality Assurance Specialist/Program Manager Julie Burke, by letter addressed to Director, Technology Center 1600, at the address listed above, or by telephone at 571-272-1600 or by facsimile sent to the general Office facsimile number, 571-273-8300.

John LeGuyader
Director, Technology Center 1600
jb/pl

UNITED STATES PATENT AND TRADEMARK OFFICE

Commissioner for Patents
United States Patent and Trademark Office
P.O. Box 1450
Alexandria, VA 22313-1450
www.uspto.gov

PILLSBURY WINTHROP SHAW PITTMAN LLP
ATTENTION: DOCKETING DEPARTMENT
P.O BOX 10500
MCLEAN VA 22102

COPY MAILED

JUN 0 5 2008

OFFICE OF PETITIONS

In re Application of	:	
Frederick M. ENRIGHT et al.	:	
Application No. 10/617,561	:	DECISION ON PETITION
Filed: July 11, 2003	:	
Attorney Docket No. **026039-0362798**	:	

This is a decision on the petition under the unintentional provisions of 37 CFR 1.137(b), filed March 05, 2008, to revive the above-identified application.

The petition is **GRANTED**.

The application became abandoned for failure to reply in a timely manner to the non-final Office action mailed, May 04, 2007, which set a shortened statutory period for reply of three (3) months. No extensions of time under the provisions of 37 CFR 1.136(a) were obtained. Accordingly, the application became abandoned on November 06, 2007.

The petition satisfies the requirements of 37 CFR 1.137(b) in that petitioner has supplied (1) the reply in the form of an amendment, (2) the petition fee of $1540, and (3) a proper statement of unintentional delay. Accordingly, the reply to the non-final Office action May 04, 2007 is accepted as having been unintentionally delayed.

In response to the Statement of Facts, included with the instant petition, it is noted that the copy of the date stamped return-postcard establishes the filing date of reply as November 07, 2007.

An extension of time under 37 CFR 1.136 must be filed prior to the expiration of the maximum extendable period for reply. See In re Application of S., 8 USPQ2d 1630, 1631 (Comm'r Pats. 1988). Since the $525 extension of time fee submitted after the date of abandonment on November 07, 2007 was subsequent to the maximum extendable period for reply, this fee is unnecessary and will be credited to petitioner's deposit account.

Telephone inquiries concerning this decision should be directed to Tredelle Jackson at (571) 272-2783.

This application is being referred to Technology Center AU 1647 for appropriate action on the concurrently filed amendment.

Ramesh Krishnamurthy
Petitions Examiner
Office of Petitions

UNITED STATES PATENT AND TRADEMARK OFFICE

UNITED STATES DEPARTMENT OF COMMERCE
United States Patent and Trademark Office
Address: COMMISSIONER FOR PATENTS
P.O. Box 1450
Alexandria, Virginia 22313-1450
www.uspto.gov

APPL NO.	FILING OR 371 (c) DATE	ART UNIT	FIL FEE REC'D	ATTY.DOCKET NO	DRAWINGS	TOT CLMS	IND CLMS
10/617,593	07/11/2003	2626	485	VOCO-09-273	4	25	3

CONFIRMATION NO. 3686

CORRECTED FILING RECEIPT

OC000000020176277

26875
WOOD, HERRON & EVANS, LLP
2700 CAREW TOWER
441 VINE STREET
CINCINNATI, OH 45202

Date Mailed: 08/24/2006

Receipt is acknowledged of this regular Patent Application. It will be considered in its order and you will be notified as to the results of the examination. Be sure to provide the U.S. APPLICATION NUMBER, FILING DATE, NAME OF APPLICANT, and TITLE OF INVENTION when inquiring about this application. Fees transmitted by check or draft are subject to collection. Please verify the accuracy of the data presented on this receipt. **If an error is noted on this Filing Receipt, please mail to the Commissioner for Patents P.O. Box 1450 Alexandria Va 22313-1450. Please provide a copy of this Filing Receipt with the changes noted thereon. If you received a "Notice to File Missing Parts" for this application, please submit any corrections to this Filing Receipt with your reply to the Notice. When the USPTO processes the reply to the Notice, the USPTO will generate another Filing Receipt incorporating the requested corrections (if appropriate).**

Applicant(s)

Arthur Eugene McNair, Pittsburgh, PA;
Lawrence R. Sweeney, Bethel Park, PA;
Timothy Joseph Eusterman, The Woodlands, TX;

Assignment For Published Patent Application

Vocollect, Inc.

Power of Attorney: The patent practitioners associated with Customer Number **26875**.

Domestic Priority data as claimed by applicant

Foreign Applications
If Required, Foreign Filing License Granted: 11/04/2003

The country code and number of your priority application, to be used for filing abroad under the Paris Convention, is US10/617,593

Projected Publication Date: Not Applicable

Non-Publication Request: No

Early Publication Request: No

**** SMALL ENTITY ****

Title

Method and system for intelligent prompt control in a multimodal software application

Preliminary Class

704

PROTECTING YOUR INVENTION OUTSIDE THE UNITED STATES

Since the rights granted by a U.S. patent extend only throughout the territory of the United States and have no effect in a foreign country, an inventor who wishes patent protection in another country must apply for a patent in a specific country or in regional patent offices. Applicants may wish to consider the filing of an international application under the Patent Cooperation Treaty (PCT). An international (PCT) application generally has the same effect as a regular national patent application in each PCT-member country. The PCT process **simplifies** the filing of patent applications on the same invention in member countries, but **does not result** in a grant of "an international patent" and does not eliminate the need of applicants to file additional documents and fees in countries where patent protection is desired.

Almost every country has its own patent law, and a person desiring a patent in a particular country must make an application for patent in that country in accordance with its particular laws. Since the laws of many countries differ in various respects from the patent law of the United States, applicants are advised to seek guidance from specific foreign countries to ensure that patent rights are not lost prematurely.

Applicants also are advised that in the case of inventions made in the United States, the Director of the USPTO must issue a license before applicants can apply for a patent in a foreign country. The filing of a U.S. patent application serves as a request for a foreign filing license. The application's filing receipt contains further information and guidance as to the status of applicant's license for foreign filing.

Applicants may wish to consult the USPTO booklet, "General Information Concerning Patents" (specifically, the section entitled "Treaties and Foreign Patents") for more information on timeframes and deadlines for filing foreign patent applications. The guide is available either by contacting the USPTO Contact Center at 800-786-9199, or it can be viewed on the USPTO website at http://www.uspto.gov/web/offices/pac/doc/general/index.html.

For information on preventing theft of your intellectual property (patents, trademarks and copyrights), you may wish to consult the U.S. Government website, http://www.stopfakes.gov. Part of a Department of Commerce initiative, this website includes self-help "toolkits" giving innovators guidance on how to protect intellectual property in specific countries such as China, Korea and Mexico. For questions regarding patent enforcement issues, applicants may call the U.S. Government hotline at 1-866-999-HALT (1-866-999-4158).

LICENSE FOR FOREIGN FILING UNDER
Title 35, United States Code, Section 184
Title 37, Code of Federal Regulations, 5.11 & 5.15

GRANTED

The applicant has been granted a license under 35 U.S.C. 184, if the phrase "IF REQUIRED, FOREIGN FILING LICENSE GRANTED" followed by a date appears on this form. Such licenses are issued in all applications where the conditions for issuance of a license have been met, regardless of whether or not a license may be required as set forth in 37 CFR 5.15. The scope and limitations of this license are set forth in 37 CFR 5.15(a) unless an earlier license has been issued under 37 CFR 5.15(b). The license is subject to revocation upon written notification. The date indicated is the effective date of the license, unless an earlier license of similar scope has been granted under 37 CFR 5.13 or 5.14.

This license is to be retained by the licensee and may be used at any time on or after the effective date thereof unless it is revoked. This license is automatically transferred to any related applications(s) filed under 37 CFR 1.53(d). This license is not retroactive.

The grant of a license does not in any way lessen the responsibility of a licensee for the security of the subject matter as imposed by any Government contract or the provisions of existing laws relating to espionage and the national security or the export of technical data. Licensees should apprise themselves of current regulations especially with respect to certain countries, of other agencies, particularly the Office of Defense Trade Controls, Department of State (with respect to Arms, Munitions and Implements of War (22 CFR 121-128)); the Bureau of Industry and Security, Department of Commerce (15 CFR parts 730-774); the Office of Foreign Assets Control, Department of Treasury (31 CFR Parts 500+) and the Department of Energy.

NOT GRANTED

No license under 35 U.S.C. 184 has been granted at this time, if the phrase "IF REQUIRED, FOREIGN FILING LICENSE GRANTED" DOES NOT appear on this form. Applicant may still petition for a license under 37 CFR 5.12, if a license is desired before the expiration of 6 months from the filing date of the application. If 6 months has lapsed from the filing date of this application and the licensee has not received any indication of a secrecy order under 35 U.S.C. 181, the licensee may foreign file the application pursuant to 37 CFR 5.15(b).

UNITED STATES PATENT AND TRADEMARK OFFICE

Commissioner for Patents
United States Patent and Trademark Office
P.O. Box 1450
Alexandria, VA 22313-1450
www.uspto.gov

CHARLES G. NESSLER
BOX H
CHESTER, CT 06412

COPY MAILED

MAR 24 2005

OFFICE OF PETITIONS

In re Application of :
Stanley J. Kirla :
Application No. 10/617,594 :
Filed: July 11, 2003 :
Attorney Docket No. 2125 :

ON PETITION

This is a decision on the petition under 37 CFR 1.137(b), filed March 11, 2005, to revive the above-identified application.

The petition is **GRANTED**.

The above-identified application became abandoned for failure submit the Issue fee in a timely manner in reply to the Notice of Allowance mailed November 5, 2004, which set a statutory period for reply of three (3) months. Accordingly, the above-identified application became abandoned on February 6, 2005.

37 CFR 1.137(b)(3) requires a statement that the entire delay in filing the required reply from the due date for the reply until the filing of a grantable petition pursuant to 37 CFR 1.137(b) was unintentional. Since the statement contained in the instant petition varies from the language required by 37 CFR 1.137(b)(3), the statement contained in the instant petition is being construed as the statement required by 37 CFR 1.137(b)(3) and petitioner must notify the Office if this is **not** a correct interpretation of the statement contained in the instant petition.

Telephone inquiries concerning this decision should be directed to Irvin Dingle at (571) 272-3210.

This file is being forwarded to the Publishing Division.

Irvin Dingle
Petitions Examiner
Office of Petitions
Office of the Deputy Commissioner
for Patent Examination Policy

UNITED STATES PATENT AND TRADEMARK OFFICE

UNITED STATES DEPARTMENT OF COMMERCE
United States Patent and Trademark Office
Address: COMMISSIONER FOR PATENTS
P.O. Box 1450
Alexandria, Virginia 22313-1450
www.uspto.gov

BLACK LOWE & GRAHAM, PLLC
701 FIFTH AVENUE
SUITE 4800
SEATTLE, WA 98104

Mail Date: 04/27/2010

Applicant	: Michael R. Manzano	: DECISION ON REQUEST FOR
Patent Number	: 7614059	: RECALCULATION of PATENT
Issue Date	: 11/03/2009	: TERM ADJUSTMENT IN VIEW
Application No	: 10/617,604	: OF WYETH AND NOTICE OF INTENT TO
Filed	: 07/11/2003	: ISSUE CERTIFICATE OF CORRECTION
		:

The Request for Recalculation is **GRANTED** to the extent indicated.

The patent term adjustment has been determined to be **1211** days. The USPTO will *sua sponte* issue a certificate of correction reflecting the amount of PTA days determined by the recalculation.

Prior to the issuance of the certificate of correction, the USPTO will afford patentee an opportunity to be heard and request reconsideration. Accordingly, patentee has **one month or thirty (30) days**, whichever is longer, to file a request for reconsideration of this patent term adjustment calculation. See 35 U.S.C. 154(b)(3)(B)(ii) and 37 CFR 1.322(a)(4). No extensions of time will be granted under 37 CFR 1.136.

Patentee should use document code PET.OP if electronically filing a request for reconsideration of this patent term adjustment calculation. The patentee must also include the information required by 37 CFR 1.705(b)(2) and the fee required by 37 CFR 1.18(e). If patentee does not file a timely request for reconsideration of this patent term adjustment calculation including the information required by 37 CFR 1.705(b)(2) and the fee required by 37 CFR 1.18(e), the USPTO will issue a certificate of correction reflecting the PTA determination noted above.

Patentee should be aware that in order to preserve the right to review in the United States District Court for the District of Columbia of the USPTO patent term adjustment determination, patentee must ensure that he or she also take the steps required under 35 U.S.C. 154(b)(4)(A) in a timely manner. Nothing in the request for recalculation should be construed as providing an alternative time frame for commencing a civil action under 35 U.S.C. 154(b)(4)(A).

Any questions concerning this decision should be directed to the Office of Patent Legal Administration at 571-272-7702.

UNITED STATES PATENT AND TRADEMARK OFFICE

COMMISSIONER FOR PATENTS
UNITED STATES PATENT AND TRADEMARK OFFICE
P.O. BOX 1450
ALEXANDRIA, VA 22313-1450
www.uspto.gov

COPY MAILED

OCT 28 2004

OFFICE OF PETITIONS

MORRISON & FOERSTER LLP
425 MARKET STREET
SAN FRANCISCO, CA 94105-2482

In re Application of
Zhang, et al.
Application No. 10/617,623
Filed: July 10, 2003
Atty. Dkt. No.: 529642000300
For: PLANT FRUIT WITH ELEVATED POTASSIUM LEVELS

DECISION GRANTING STATUS UNDER 37 CFR 1.47(a)

This decision is in response to the petition under 37 CFR 1.47(a), filed March 17, 2004.

The petition is **GRANTED**.

Petitioner has shown that inventor Hong-Xia Zhang has refused to execute the declaration for the above-identified application after having been presented with the application papers.

The above-identified application and papers have been reviewed and found in compliance with 37 CFR 1.47(a). This application is hereby accorded Rule 1.47(a) status.

As provided in Rule 1.47(c), this Office will forward notice of this application's filing to the non-signing inventors at the addresses given in the petition. Notice of the filing of this application will also be published in the Official Gazette.

After this decision is mailed, the above-identified application will be returned to the Office of Initial Patent Examination for further processing.

Telephone inquiries regarding this decision should be directed to the undersigned at (571) 272-3205.

Alesia M. Brown
Petitions Attorney
Office of Petitions

UNITED STATES PATENT AND TRADEMARK OFFICE

COMMISSIONER FOR PATENTS
UNITED STATES PATENT AND TRADEMARK OFFICE
P.O. BOX 1450
ALEXANDRIA, VA 22313-1450
www.uspto.gov

Hong-Xia Zhang
14 James Park Square
Scarborough, Ontario, MIV 2E6
Canada

COPY MAILED

OCT 28 2004

OFFICE OF PETITIONS

In re Application of	:	
Zhang, et al.	:	
Application No. 10/617,623	:	LETTER
Filed: July 10, 2003	:	
Docket No.: 529642000300	:	
For: PLANT FRUIT WITH ELEVATED	:	
POTASSIUM LEVELS	:	

Dear Sir:

You are named as an inventor in the above-identified United States patent application filed under the provisions of 35 U.S.C. 116 (United States Code) and 37 C.F.R. § 1.47(a), Rules of Practice in Patent Cases. Should a patent be granted on the application you will be designated therein as a joint inventor.

As a named inventor you are entitled to inspect any paper in the file wrapper of the application, order copies of all or any part thereof (at a prepaid cost as per 37 C.F.R. § 1.19) or make your position of record in the application. Alternatively, you may arrange to do any of the preceding through a registered patent attorney or agent presenting written authorization from you. If you care to join the application, counsel of record (see below) would presumably assist you. Joining in the application would entail the filing of an appropriate oath or declaration by you pursuant to 37 C.F.R. § 1.63.

Telephone inquiries regarding this communication should be directed to the undersigned at (571) 272-3205. Requests for information regarding your application should be directed to the File Information Unit at (703) 308-2733. Information regarding how to pay for and order a copy of the application, or a specific paper in the application, should be directed to Certification Division at (703) 308-9726 or 1-800-972-6382 (outside the Washington D.C. area).

Telephone inquiries regarding this matter should be directed to the undersigned at (571) 272-3205.

Alesia M. Brown
Senior Petitions Attorney
Office of Petitions

UNITED STATES PATENT AND TRADEMARK OFFICE

Commissioner for Patents
United States Patent and Trademark Office
P.O. Box 1450
Alexandria, VA 22313-1450
www.uspto.gov

THE GATES CORPORATION
IP LAW DEPARTMENT 10-A3
1551 WEWATTA ST
DENVER CO 80202

COPY MAILED
JUL 31 2006
OFFICE OF PETITIONS

In re Application of
Alexander Serkh and Andrzej Dec :
Application No. 10/617,628 : DECISION ON
Filed: July 10, 2003 : PETITION
Attorney Docket No. T02-061A :

This is in response to the paper titled "PETITION", filed September 19, 2005, which is being treated as petitions to revive under 37 CFR 1.137(a) and 37 CFR 1.137(b).

The petition under 37 CFR 1.137(a) is **DISMISSED**.

The petition under 37 CFR 1.137(b) is **GRANTED**.

The above-identified application became abandoned for failure to timely file a reply to the non-final Office action mailed January 12, 2005. This Office action set a shortened statutory period for reply of three (3) months. No extensions of time under 37 CFR 1.136(a) were obtained. No reply having been received, the above-identified application became abandoned on April 13, 2005. A Notice of Abandonment was mailed on September 13, 2005.

Petition Under 37 CFR 1.137(a):

A grantable petition under 37 CFR 1.137(a) must be accompanied by: (1) the reply required to the outstanding Office action or notice, unless previously filed; (2) the petition fee set forth in 37 CFR 1.17(l); (3) a showing to the satisfaction of the Commissioner that the entire delay in filing the required reply from the due date for the reply until the filing of a grantable petition pursuant to this paragraph was unavoidable; and (4) any terminal disclaimer (and fee as set forth in 37 CFR 1.20(d)) required pursuant to 37 CFR 1.137(d). The instant petition lacks item (3).

Decisions on reviving abandoned applications on the basis of "unavoidable" delay have adopted the reasonably prudent person standard in determining if the delay was unavoidable: "The word 'unavoidable' ... is applicable to ordinary human affairs, and requires no more or greater care or diligence than is generally used and observed by prudent and careful men in relation to their most important business."[1]

Moreover, delay resulting from the lack of knowledge or improper application of the patent statutes, rules of practice or the Manual of Patent Examining Procedure, however, does not constitute "unavoidable" delay.[2]

Petitioner offers two explanations as to why the entire delay was unavoidable. According to petitioner, he had a overly burdensome workload. In addition, a lapse of communication occurred between petitioner and his assistant. However, petitioner has failed to explain why precisely his workload prevented him from treating the prosecution of the instant application as his "most important business". In addition, petitioner has failed to elaborate on the communication problem with his assistant.

Accordingly, the entire period of delay in the above-identified application can not be characterized as "unavoidable".

The petition fee required for a petition to revive is required for the filing, not merely the grant, of the petition.[3] Accordingly, the $500 petition fee has been charged to Deposit Account No. 07-0475, as authorized.

Petition Under 37 CFR 1.137(b):

A grantable petition under 37 CFR 1.137(b) must be accompanied by: (1) the required reply, unless previously filed; (2) the petition fee as set forth in 37 CFR 1.17(m); (3) a statement that the entire delay in filing the required reply from the due date for the reply until the filing of a grantable petition pursuant to 37 CFR 1.137(b) was unintentional; and (4) any terminal disclaimer (and fee as set forth in 37 CFR 1.20(d)) required by 37 CFR 1.137(d).

With the instant petition, petitioner paid the petition fee, submitted the required reply in the form of an amendment, and made a statement of unintentional delay. 37 CFR 1.137(b)(3) requires a statement that the entire delay in filing the required

---

[1] In re Mattulath, 38 App. D.C. 497, 514-15 (1912)(*quoting* Ex parte Pratt, 1887 Dec. Comm'r Pat. 31, 32-33 (1887)); see also Winkler v. Ladd, 221 F. Supp. 550, 552, 138 U.S.P.Q. 666, 167-68 (D.D.C. 1963), aff'd, 143 U.S.P.Q. 172 (D.C. Cir. 1963); Ex parte Henrich, 1913 Dec. Comm'r Pat. 139, 141 (1913).

[2] See Haines, 673 F. Supp. at 317, 5 U.S.P.Q. 2d at 1132; Vincent v. Mossinghoff, 230 U.S.P.Q. 621, 624 (D.D.C. 1985); Smith v. Diamond, 209 U.S.P.Q. 1091 (D.D.C. 1981); Potter v. Dann, 201 U.S.P.Q. 574 (D.D.C. 1978); Ex parte Murray, 1891 Dec. Comm'r Pat. 130, 131 (1891).

[3] See MPEP 711.03(c)(II)(B).

reply from the due date for the reply until the filing of a grantable petition pursuant to 37 CFR 1.137(b) was unintentional. The statement contained in the instant petition varies from the language required by 37 CFR 1.137(b)(3). The statement contained in the instant petition is being construed as the statement required by 37 CFR 1.137(b)(3). Petitioner must notify the Office if this is **not** a correct interpretation of the statement contained in the instant petition.

The $1500 petition fee has been charged to Deposit Account No. 07-0475, as authorized.

The application file is being forwarded to the Group Art Unit 3682 for examination.

Telephone inquiries related to this decision should be directed to the undersigned at 571-272-3207.

Cliff Congo

Cliff Congo
Petitions Attorney
Office of Petitions

UNITED STATES PATENT AND TRADEMARK OFFICE

Commissioner for Patents
United States Patent and Trademark Office
P.O. Box 1450
Alexandria, VA 22313-1450
www.uspto.gov

March 15, 2006

Keith R. Derrington
SIMMONS & DERRINGTON, LLP
Frost Bank Building
6750 West Loop South, Suite 920
Bellaire, TX 77401

Patent No.: 6961118 B2
Application No.: 10/617645
Inventor(s): **Arnoldo Rolon, et al.**
Issued: November 1, 2005
Title: **CONTINUOUS PAPER FEED SYSTEM**

Re: Request for Certificate of Correction

Consideration has been given your request for the issuance of a certificate of correction for the above-identified patent under the provisions of Rule(s) 1.322 and/or 1.323.

Assignees' names and addresses (assignment data) printed in a patent, are based *solely* on information supplied in the appropriate space for identifying the assignment data, i.e., item 3 of the Issue Fee Transmittal Form PTOL-85B. Granting of a request under 37 CFR 3.81(b) is required to correct applicant's error providing ***incorrect or erroneous*** assignment data, *before* issuance of a Certificate of Correction, under 37 CFR 1.323 *(see Manual of Patent Examining Procedures (M.P.E.P) Chp.1400, sect. 1481).* This procedure is required *at any time after the issue fee is paid*, including after issuance of the patent.

In view of the foregoing, your request, in this mater, is hereby denied.

A request to correct the Assignee under 37 CFR 3.81(b) should include:

A. **the processing fee set forth in 37 CFR 1.117(h) (currently $130);**
B. a statement that the failure to include the correct assignee name on the PTOL-85B was inadvertent; and

C. a copy of the Notice of Recordation of Assignment Document, reflecting the reel and frame number where the assignment(s) is recorded and/or reflecting proof of *the date* the assignment was submitted for recordation.

In the Request, Applicant(s) may request that the file be forwarded to Certificates of Correction Branch, for issuance of a Certificate of Correction, if the Request is granted.

Any request under 37 CFR 3.81(b) should be directed to the following address or facsimile number:

By mail: Mail Stop PETITIONS
Commissioner for Patents
Post Office Box 1450
Alexandria, VA 22313-1450

By hand: Customer Service Window
Mail Stop Petitions
Randolph Building
401 Dulany Street
Alexandria, VA 22314

By fax: (703) 872-9306
ATTN: Office of Petitions

If a fee (currently $100) was previously submitted for consideration of a Request for Certificate of Correction, under CFR 1.323, to correct assignment data, no additional fee is required.

Virginia Tolbert
For Cecelia Newman
Decisions & Certificate of Correction Branch
(703) 305-8309 or (703) **308-9390 ext 113**

vt

UNITED STATES PATENT AND TRADEMARK OFFICE

Commissioner for Patents
United States Patent and Trademark Office
P.O. Box 1450
Alexandria, VA 22313-1450
www.uspto.gov

KEITH R.DERRINGTON
SIMMONS & DERRINGTON, LLP
6750 WEST LOOP SOUTH, SUITE 920
FROST BANK BUILDING
BELLAIRE TX 77401

COPY MAILED
AUG 29 2006
OFFICE OF PETITIONS

In re Patent No. 6,961,118 :
Issued: November 1, 2005 :
Application No. 10/617,645 : ON PETITION
Filed: July 11, 2003 :
Attorney Docket Number: 584-30865 US :

This is a decision on the petition, filed April 7, 2006, under 37 CFR 3.81(b)[1], to correct the assignee's name on the front of the Patent.

The petition is **GRANTED**.

Petitioner states that the name of the assignee, Rolon Engineering Associates, was inadvertently not included on the Fee(s) Transmittal form PTOL-85(b) at the time of payment of the issue fee. Accordingly, petitioner requests that a certificate of correction be issued to reflect the name of the assignee on the front page of the Letters Patent.

37 CFR 3.81(b), effective June 25, 2004, reads:

> *After payment of the issue fee:* Any request for issuance of an application in the name of the assignee submitted after the date of payment of the issue fee, and any request for a patent to be corrected to state the name of the assignee, must state that the assignment was submitted for recordation as set forth in § 3.11 before issuance of the patent, and must include a request for a certificate of correction under § 1.323 of this chapter (accompanied by the fee set forth in § 1.20(a) and the processing fee set forth in § 1.17(i) of this chapter.

A request for certificate of correction (and fee) as required by 3.81(b) was filed February 27, 2006 and dismissed in a decision mailed March 16, 2006 since the request was not accompanied by a petition under 37 CFR 3.81.

---

[1] *See* Official Gazette of June 22, 2004

Office assignment records however, reflect that Rolon Engineering Associates is the assignee of record. Accordingly, as the request complies with the provisions of 37 CFR 3.81(b), it would be appropriate for a certificate of correction to issue.

The petition fee and the fee for the certificate of correction have been properly posted to the finance records for this patent.

Also, the address shown on the petition differs from the address of record. The mere inclusion, in a paper filed in the application for another purpose, of an address differing from the previously provided correspondence address, without mentioning the fact that an address change was made, does not constitute a proper change of address notification." See MPEP sections 601.03 and 711.02(c). A courtesy copy of this decision is being mailed to the address found on the petition but in the future, dual correspondences will not be mailed.

Inquiries concerning this decision should be directed to the undersigned at (571) 272-3212. Any questions concerning the issuance of a certificate of correction should be directed to the Certificates of Correction Branch at (703) 305-8309.

This file is being referred to the Certificates of Correction Branch for issuance of a certificate of correction.

Patricia Faison-Ball

Patricia Faison-Ball
Senior Petitions Attorney
Office of Petitions

cc:
KEITH R.DERRINGTON
STERLING BANK BUILDING, SUITE 465
10260 WESTHEIMER
HOUSTON, TX 77042

SPE RESPONSE FOR CERTIFICATE OF CORRECTION 10/617700

Paper No.: _____

DATE : 2-7-04

TO SPE OF : ART UNIT 3752

SUBJECT : Request for Certificate of Correction on Patent No.: 6974095
A response is requested with respect to the accompanying request for a certificate of correction.

Please complete this form and return with file, within 7 days to:
Certificates of Correction Branch - ~~PK 3-922~~ South Tower 9A21
Palm location 7580 - Tel. No. 305-8309

With respect to the change(s) requested, correcting Office and/or Applicant's errors, should the patent read as shown in the certificate of correction? No new matter should be introduced, nor should the scope or meaning of the claims be changed.

Check claims

Thank You For Your Assistance

E Yong
Certificates of Correction Branch

The request for issuing the above-identified correction(s) is hereby:
Note your decision on the appropriate box.

- ☒ **Approved** — All changes apply.
- ☐ **Approved in Part** — Specify below which changes do not apply.
- ☐ **Denied** — State the reasons for denial below.

Comments:

OK to enter. SOR

Kenneth Thomas
SPE

3752
Art Unit

PTOL-306 (REV. 7-03)

U.S. DEPARTMENT OF COMMERCE Patent and Trademark Office

UNITED STATES PATENT AND TRADEMARK OFFICE

Commissioner for Patents
United States Patent and Trademark Office
P.O. Box 1450
Alexandria, VA 22313-1450
www.uspto.gov

COPY MAILED

JUN 13 2005

OFFICE OF PETITIONS

REED SMITH LLP
3110 FAIRVIEW PARK DRIVE, SUITE 1400
FALLS CHURCH VA 22042

In re Application of :
Katsuyoshi Ishihara et al :
Application No. 10/617,755 :
Filed: July 14, 2003 :
Attorney Docket No. HITA.0411 :

ON PETITION

This is a decision on the petition, filed June 8, 2005, under 37 CFR 1.313(c)(2) to withdraw the above-identified application from issue after payment of the issue fee.

The petition is **GRANTED**.

The above-identified application is withdrawn from issue for consideration of a submission under 37 CFR 1.114 (request for continued examination). See 37 CFR 1.313(c)(2).

Petitioner is advised that the issue fee paid on May 24, 2005 in the above-identified application cannot be refunded. If, however, the above-identified application is again allowed, petitioner may request that it be applied towards the issue fee required by the new Notice of Allowance.[1]

Telephone inquiries should be directed to the undersigned at (571) 272-3208.

The examiner of Technology Center AU 2871 will consider the request for continued examination under 37 CFR 1.114.

Karen Creasy

Karen Creasy
Petitions Examiner
Office of Petitions
Office of the Deputy Commissioner
for Patent Examination Policy

---

[1] The request to apply the issue fee to the new Notice may be satisfied by completing and returning the new Issue Fee Transmittal Form PTOL-85(b), which includes the following language thereon: "Commissioner for Patents is requested to apply the Issue Fee and Publication Fee (if any) or re-apply any previously paid issue fee to the application identified above." Petitioner is advised that, whether a fee is indicated as being due or not, the Issue Fee Transmittal Form **must** be completed and timely submitted to avoid abandonment. Note the language in bold text on the first page of the Notice of Allowance and Fee(s) Due (PTOL-85).

UNITED STATES PATENT AND TRADEMARK OFFICE

COMMISSIONER FOR PATENTS
UNITED STATES PATENT AND TRADEMARK OFFICE
P.O. BOX 1450
ALEXANDRIA, VA 22313-1450
www.uspto.gov

Paper No. _____

Date : June 13, 2005

TO : Director, Office of Patent Publication

FROM : Office of the Deputy Commissioner
for Patent Examination Policy

SUBJECT : Withdrawal from Issue of

Applicant(s) :Katsuyoshi Ishihara et al
Application No. :10/617,755
Filed :July 14, 2003

The above-identified application has been assigned Patent No. 6,912,023 and an issue date of June 28, 2005.

It is hereby directed that this application be withdrawn from issue at the request of the applicant.

Do not refund the issue fee.

The following erratum should be published in the Official Gazette if the above-identified application is published in the OG of June 28, 2005:

"All reference to Patent No. 6,912,023 to Katsuyoshi Ishihara et al of Japan for LIQUID CRYSTAL DISPLAY DEVICE appearing in the Official Gazette of June 28, 2005 should be deleted since no patent was granted."

Karen Creasy

Karen Creasy
Petitions Examiner
Office of Petitions
Office of the Deputy Commissioner
for Patent Examination Policy

cc: Paul Harrison, MDW-4B03,(FAX-273-5468)
Deneise Boyd, MDE-3D39 (FAX-273-5124)
Mary Louise McAskill, ST-8C15 (FAX 305-4372)
Niomi Farmer, ST-8C14 (FAX-305-4372)
Mary E. Johnson (Cookie), MDE-7C71 (FAX 273-0038
Duane Davis P/OPC MDE-7D89
Tamara Greene, ST-8C13

UNITED STATES PATENT AND TRADEMARK OFFICE

UNITED STATES DEPARTMENT OF COMMERCE
United States Patent and Trademark Office
Address: COMMISSIONER FOR PATENTS
P.O. Box 1450
Alexandria, Virginia 22313-1450
www.uspto.gov

APPLICATION NO.	FILING DATE	FIRST NAMED INVENTOR	ATTORNEY DOCKET NO.	CONFIRMATION NO.
10/617,763	07/14/2003	Jae-Ryong Bum	P23955	4038

7055 7590 01/07/2008
GREENBLUM & BERNSTEIN, P.L.C.
1950 ROLAND CLARKE PLACE
RESTON, VA 20191

EXAMINER
SHIN, CHRISTOPHER B

ART UNIT	PAPER NUMBER
2181	

NOTIFICATION DATE	DELIVERY MODE
01/07/2008	ELECTRONIC

Please find below and/or attached an Office communication concerning this application or proceeding.

The time period for reply, if any, is set in the attached communication.

Notice of the Office communication was sent electronically on above-indicated "Notification Date" to the following e-mail address(es):

gbpatent@gbpatent.com
pto@gbpatent.com

UNITED STATES PATENT AND TRADEMARK OFFICE

Commissioner for Patents
United States Patent and Trademark Office
P.O. Box 1450
Alexandria, VA 22313-1450
www.uspto.gov

MAILED

JAN 04 2008

TECHNOLOGY CENTER 2100

Gregory D. Leibold
Merchant & Gould P.C.
P.O. Box 2903
Minneapolis, MN 55402-0903

In re Application of:
Jae-Ryong BUM
Appl. No.: 10/617763
Filed: July 14, 2003
For: HOST PROCESSING DEVICE USING EXTERNAL STORAGE MEDIUM

DECISION ON PETITION UNDER 37 CFR § 1.59

This is a decision on the petition under 37 CFR § 1.59(b), filed on January 7 2004 and also on April 10, 2006, to expunge information submitted pursuant to MPEP § 724.05.

The petition is **DISMISSED**.

Petitioner requests that the information submitted in an Information Disclosure Statement, filed October 14, 2003, be expunged from the record. Petitioner states that failure to obtain its return would cause irreparable harm to Applicant, and the information has not otherwise been made public. The petition fee set forth in 37 CFR § 1.17(h) has been paid.

The petition is premature because the application has not been allowed or abandoned. Accordingly, it is not appropriate to make a final determination of whether or not the material requested to be expunged is "material," with "materiality" being defined as any information which the examiner considers as being important to a determination of patentability of the claims. Thus, the petition to expunge must be dismissed at this time.

During prosecution on the merits, the examiner will determine whether or not the information submitted on October 14, 2003 is considered to be "material." Once prosecution on the merits is closed, applicant may re-submit a petition to expunge the information. No further fee is required for such a second submission of a petition under 37 CFR § 1.59 to expunge information. If the information is not considered by the examiner to be material, the information will be expunged from the application and may be returned to applicant.

The identified documents are currently not available for public view as of December 21, 2007. It is noted that the instant application has been published on February 26, 2004. Thus, the identified documents submitted on October 14, 2003 have already been made available to the public and subject to copying by the public. According, the Office cannot guarantee that the information being closed as a result of this decision was not previously accessed by the public.

Any inquiry concerning this decision should be directed to the undersigned whose telephone number is (571) 272-4210.

Mano Padmanabhan

Mano Padmanabhan, WQAS 2180
Technology Center 2100
Computer Architecture, Software, and Information Security

UNITED STATES PATENT AND TRADEMARK OFFICE

UNITED STATES DEPARTMENT OF COMMERCE
United States Patent and Trademark Office
Address: COMMISSIONER FOR PATENTS
P.O. Box 1450
Alexandria, Virginia 22313-1450
www.uspto.gov

APPLICATION NO.	FILING DATE	FIRST NAMED INVENTOR	ATTORNEY DOCKET NO.	CONFIRMATION NO.
10/617,763	07/14/2003	Jae-Ryong Bum	P23955	4038

7055 7590 07/10/2008
GREENBLUM & BERNSTEIN, P.L.C.
1950 ROLAND CLARKE PLACE
RESTON, VA 20191

EXAMINER
SHIN, CHRISTOPHER B

ART UNIT	PAPER NUMBER
2181	

NOTIFICATION DATE	DELIVERY MODE
07/10/2008	ELECTRONIC

Please find below and/or attached an Office communication concerning this application or proceeding.

The time period for reply, if any, is set in the attached communication.

Notice of the Office communication was sent electronically on above-indicated "Notification Date" to the following e-mail address(es):

gbpatent@gbpatent.com
pto@gbpatent.com

UNITED STATES PATENT AND TRADEMARK OFFICE

Commissioner for Patents
United States Patent and Trademark Office
P.O. Box 1450
Alexandria, VA 22313-1450
www.uspto.gov

MAILED

JUL 09 2008

TECHNOLOGY CENTER 2100

GREENBLUM & BERNSTEIN, P.L.C.
1950 ROLAND CLARKE PLACE
RESTON VA 20191

In re Application of:
Jae-Ryong BUM
Appl. No.: 10/617763
Filed: July 14, 2003
For: HOST PROCESSING DEVICE USING EXTERNAL STORAGE MEDIUM

DECISION ON PETITION UNDER 37 CFR § 1.59

This is a decision on the petition under 37 CFR § 1.59(b), filed on June 6, 2008, to expunge information submitted pursuant to MPEP § 724.05.

The petition is **GRANTED**.

Petitioner requests that the information submitted in an Information Disclosure Statement, filed October 14, 2003, be expunged from the record. Petitioner states that failure to obtain its return would cause irreparable harm to Applicant, and the information has not otherwise been made public. The petition fee set forth in 37 CFR § 1.17(g) has been paid.

The petition is premature because the application has not been allowed or abandoned. Accordingly, it is not appropriate to make a final determination of whether or not the material requested to be expunged is "material," with "materiality" being defined as any information which the examiner considers as being important to a determination of patentability of the claims. Thus, the petition to expunge must be dismissed at this time.

The identified documents are currently not available for public view as of December 21, 2007. It is noted that the instant application has been published on February 26, 2004. Thus, the identified documents submitted on October 14, 2003 have already been made available to the public and subject to copying by the public. According, the Office cannot guarantee that the information being closed as a result of this decision was not previously accessed by the public.

Applicant is required to retain the expunged material(s) for the life of any patent, which issues on the above-identified application.

The expunged material has been closed from public view and will not be returned to applicant.

Any inquiry concerning this decision should be directed to the undersigned whose telephone number is (571) 272-4210.

Mano Padmanabhan

Mano Padmanabhan, WQAS 2180
Technology Center 2100
Computer Architecture, Software, and Information Security

UNITED STATES PATENT AND TRADEMARK OFFICE

Commissioner for Patents
United States Patent and Trademark Office
P.O. Box 1450
Alexandria, VA 22313-1450
www.uspto.gov

NIXON PEABODY, LLP
401 9TH STREET, NW
SUITE 900
WASHINGTON, DC 20004-2128

COPY MAILED

SEP 13 2004

OFFICE OF PETITIONS

In re Application of
Kralik
Application No. 10/617,771
Filed: July 14, 2003
Attorney Docket No. 740123-469

ON PETITION

This decision concerns the June 25, 2004 "Response to Notice of Omitted Items in a Nonprovisional Application and Petition." The petition asserts filing with the original application of the allegedly omitted drawings and is being properly treated as a petition under 37 CFR 1.53(e)(2).

The petition is **GRANTED.**

The application was filed on July 14, 2003. As indicated in the June 7, 2004 "Notice of Omitted Items in a Nonprovisional Application" ("6/7/04 Notice"), a filing date had been accorded this application, but Figures 1 and 2 described in the specification appeared to have been omitted from the filed application. The petition then followed.

The petition contends that the allegedly omitted drawings were filed with the other application papers on July 14, 2003. In support, the petition is accompanied by a copy of a postcard receipt, indicating receipt in the USPTO for this application on July 14, 2003 of, *inter alia*, "3 sheets of formal drawings (Figures 1-3)." The petition also encloses a copy of the 3 sheets of drawings purportedly filed on July 14, 2003.

The USPTO file for this application includes only one sheet of drawing containing Figure 3, but not the drawings for Figures 1 and 2. Based on the information contained in counsel's postcard receipt, the Office concludes that drawings for Figures 1 and 2 had been filed on July 14, 2003, but were later misplaced. The petition is thus granted.

The 6/7/04 Notice is hereby vacated.

No petition fee is owed and none was charged to counsel's deposit account.

The application is being returned to the Office of Initial Patent Examination for further processing with a filing date of July 14, 2003, using the papers filed on that date and supplemented with the 2 sheets of drawings (Figures 1 and 2) submitted with the instant petition; and for indicating in the USPTO record that 3 sheets of drawings (Figures 1-3) were present on filing.

Telephone inquiries should be directed to Petitions Attorney RC Tang at (703) 308-0763 (before September 15, 2004), or to the undersigned at (703) 306-5683 (before September 27, 2004) or (571) 272-3203 (after September 27, 2004).

Charles Steven Brantley
Senior Petitions Attorney
Office of Petitions

UNITED STATES PATENT AND TRADEMARK OFFICE

Commissioner for Patents
United States Patent and Trademark Office
P.O. Box 1450
Alexandria, VA 22313-1450
www.uspto.gov

Sterne, Kessler, Goldstein & Fox, PLLC
1100 New York Avenue, NW
Washington, DC 20005

COPY MAILED

SEP 22 2005

OFFICE OF PETITIONS

In re Application of
Zierenberg et al.
Application No. 10/617,804
Filed: July 14, 2003
Attorney Docket No. 0652.206002/ALF/MJM

DECISION ON PETITION

This is a decision on the petition under 37 CFR 1.182, filed July 20, 2005, to withdraw a terminal disclaimer.

In the present petition, petitioners request that the Office withdraw the terminal disclaimer filed on February 22, 2005, because it is unnecessary. Specifically, petitioners argue that they filed the terminal disclaimer in response to an improper double patenting rejection.

Initially, the Office notes that petitioners submitted the Fee(s) Transmittal (Form PTOL-85B) and paid the issue fee on June 22, 2005, in response to the Notice of Allowance and Fee(s) Due. On July 20, 2005, petitioners filed the present petition. Thereafter, the above-identified application proceeded to issue as a patent on August 23, 2005, before the petition reached an appropriate USPTO official to decide it on the merits.

Petitioners are reminded that an allowed application may issue as a patent approximately four weeks after payment of the issue fee. The Office cannot ensure that any post allowance correspondence will reach the appropriate USPTO official for consideration before the date the application issues as a patent. Therefore, the Office encourages petitioners to file any necessary petitions or other papers prior to paying the issue fee, preferably within one month after the mailing of the Notice of Allowance. *See* MPEP 502; 1308. If timely requested, the Office may grant a petition to withdraw a recorded terminal disclaimer before the application in which it is filed issues as a patent. However, it is unlikely that a recorded terminal disclaimer will be nullified after the application issues as a patent. *See* MPEP 1490.

Unfortunately, petitioners did not submit the present petition in a timely manner to ensure that it would reach an appropriate USPTO official for consideration before the date the application issued as a patent. Section 1490 (B) of the Manual for Patent Examining Procedure discusses the policy of the USPTO regarding the withdrawal of a terminal disclaimer after issuance of a patent.

Section 1490(B) states in pertinent part:

> The mechanisms to correct a patent — Certificate of Correction (35 U.S.C. 255), reissue (35 U.S.C. 251), and reexamination (35 U.S.C. 305) — are not available to withdraw or otherwise nullify the effect of a recorded terminal disclaimer. As a general principle, public policy does not favor the restoration to the patent owner of something that has been freely dedicated to the public, particularly where the public interest is not protected in some manner — e.g., intervening rights in the case of a reissue patent. *See, e.g., Altoona Publix Theatres v. American Tri-Ergon Corp.*, 294 U.S. 477, 24 USPQ 308 (1935).
>
> Certificates of Correction (35 U.S.C. 255) are available for the correction of an applicant's mistake. The scope of this remedial provision is limited in two ways — by the nature of the mistake for which correction is sought and the nature of the proposed correction. *In re Arnott*, 19 USPQ2d 1049 (Comm'r Pat. 1991). The nature of the mistake for which correction is sought is limited to those mistakes that are:
>
> (A) of a clerical nature,
> (B) of a typographical nature, or
> (C) of a minor character.
>
> The nature of the proposed correction is limited to those situations where the correction does not involve changes which would:
>
> (A) constitute new matter, or
> (B) require reexamination.
>
> A mistake in filing a terminal disclaimer does not fall within any of the categories of mistake for which a certificate of correction of applicant's mistake is permissible, and any attempt to remove or nullify the effect of the terminal disclaimer would typically require reexamination of the circumstances under which it was filed.
>
> Although the remedial nature of reissue (35 U.S.C. 251) is well recognized, reissue is not available to correct all errors. It has been the Office position that reissue is not available to withdraw or otherwise nullify the effect of a terminal disclaimer recorded in an issued patent. First, the reissue statute only authorizes the Director of the USPTO to reissue a patent "for the unexpired part of the term of the original patent." Since the granting of a reissue patent without the effect of a recorded terminal disclaimer would result in extending the term of the original patent, reissue under these circumstances would be contrary to the statute. Second, the principle against recapturing something that has been intentionally dedicated to the public dates back to *Leggett v. Avery*, 101 U.S. 256 (1879). The attempt to restore that portion of the patent term that was dedicated to the public to secure the grant of the original patent would be contrary to this recapture principle. Finally, applicants have the opportunity to challenge the need for a terminal disclaimer during the prosecution of the application that issues as a patent. "Reissue is not

a substitute for Patent Office appeal procedures." *Ball Corp. v. United States*, 729 F.2d 1429, 1435, 221 USPQ 289, 293 (Fed. Cir. 1984). Where applicants did not challenge the propriety of the examiner's obvious-type double patenting rejection, but filed a terminal disclaimer to avoid the rejection, the filing of the terminal disclaimer did not constitute error within the meaning of 35 U.S.C. 251. *Ex parte Anthony*, 230 USPQ 467 (Bd. App. 1982), *aff 'd*, No. 84-1357 (Fed. Cir. June 14, 1985).

Finally, the nullification of a recorded terminal disclaimer would not be appropriate in a reexamination proceeding. There is a prohibition (35 U.S.C. 305) against enlarging the scope of a claim during a reexamination proceeding. As noted by the Board in *Anthony*, *supra*, if a terminal disclaimer was nullified, "claims would be able to be sued upon for a longer period than would the claims of the original patent. Therefore, the vertical scope, as opposed to the horizontal scope (where the subject matter is enlarged), would be enlarged."

In view of the above, the petition is **dismissed**.

Telephone inquiries regarding this decision may be directed to the undersigned at (571) 272-3211.

Christina Tartera Donnell

Christina Tartera Donnell
Senior Petitions Attorney
Office of Petitions

UNITED STATES PATENT AND TRADEMARK OFFICE

Commissioner for Patents
United States Patent and Trademark Office
P.O. Box 1450
Alexandria, VA 22313-1450
www.uspto.gov

Paper No.

TROXELL LAW OFFICE PLLC
SUITE 1404
5205 LEESBURG PIKE
FALLS CHURCH VA 22041

COPY MAILED

JUN 28 2007

OFFICE OF PETITIONS

In re Application of	:	
Freddy Lin	:	DECISION ON
Application No. 10/617,808	:	PETITION
Filed: July 14, 2003	:	
Atty Docket No. BHT-3098-152	:	

This is a decision on the petition under 37 CFR 1.137(b), filed June 1, 2007.

The petition is **GRANTED**.

The above-identified application became abandoned for failure to pay the Issue Fee (and Publication Fee) within three months of the mailing date, February 27, 2007, of the Notice of Allowance and Fee(s) Due. This Office action set a three-month nonextendable statutory period for reply. No reply having been received, the above-identified application became abandoned on May 28, 2007. A courtesy Notice of Abandonment was mailed on June 8, 2007.

The petition included the required reply in the form of payment of the Issue Fee and the Publication Fee[1], payment of the petition fee set forth in 37 CFR § 1.17(m); and the required statement of unintentional delay. No terminal disclaimer is required.

The Office of Patent Publication has been advised of this decision.

[1] There was no distinct but concurrent requirement for new drawings.

Telephone inquiries related to this decision should be directed to the undersigned at (571) 272-3219.

Nancy Johnson
Senior Petitions Attorney
Office of Petitions

UNITED STATES PATENT AND TRADEMARK OFFICE

Commissioner for Patents
United States Patent and Trademark Office
P.O. Box 1450
Alexandria, VA 22313-1450
www.uspto.gov

Mattingly, Stanger & Malur, P.C.
Suite 370
1800 Diagonal Road
Alexandria VA 22314

MAILED

OCT 19 2005

DIRECTOR'S OFFICE
TECHNOLOGY CENTER 2600

In re Application of
Akio Nagasaka, et al.
Application No. 10/617,828
Filed: July 14, 2003
For: PERSONAL AUTHENTICATION DEVICE

DECISION ON PETITION
TO MAKE SPECIAL

This is a decision on the petition filed October 5, 2005 under Manual of Patent Examination Procedure §708.02, VIII requesting accelerated examination.

The petition under Manual of Patent Examination Procedure §708.02, VIII, must:
(1) be filed prior to receiving any examination by the examiner,
(2) be accompanied by the required fee- $130,
(3) the claims should be directed to a single invention (if it is determined that the claims pertain to more than one invention, then applicant will have to make an election without traverse or forfeit accelerated examination status),
(4) state that a pre-examination search was made, and fully discuss the search method employed, such as classes and subclasses searched, publications, Chemical abstracts, patents, etc. A search made by a foreign patent office satisfies this requirement,
(5) be accompanied by a copy of each of the references most closely related to the subject matter encompassed by the claims if said references are not already of record,
(6) fully discuss the references, pointing out with the particularity required by 37 C.F.R. §1.111 (b) and (c), how the claimed subject matter is patentable over the references.

The petitioner meets all the above-listed requirements. Accordingly, the petition is **GRANTED**.

The application will retain its special status throughout its entire prosecution, including any appeal to the Board of Patent Appeals and Interferences, subject only to diligent prosecution by the applicant. The application file is being forwarded to the examiner for appropriate action in due course.

Krista Zele
Special Program Examiner
Technology Center 2600
Communications

UNITED STATES PATENT AND TRADEMARK OFFICE

Commissioner for Patents
United States Patent and Trademark Office
P. O. Box 1450
Alexandria, VA 22313-1450
www.uspto.gov

Paper No.

Myers Bigel Sibley & Sajovec
P. O. Box 37428
Raleigh, NC 27627

COPY MAILED

SEP 2 6 2003

OFFICE OF PETITIONS

In re Application of	:	
Adam William Saxler, et al.	:	
Application No. 10/617,843	:	DECISION GRANTING
Filed: July 11, 2003	:	PETITION
Attorney Docket No. 5308-248	:	

This is a decision on the petition filed September 10, 2003, requesting that the above-identified application be accorded a filing date of July 11, 2003, rather than the presently accorded date of July 14 2003. The petition is properly treated as a petition under 37 CFR 1.10(c).

The petition is **GRANTED**.

Petitioner alleges that the application was deposited in Express Mail Service on July 11, 2003. In support, the petition is accompanied by a copy of Express Mail receipt No. EV353610072US. It is noted that while the handwritten "date-in" marking on the "Express Mail" mailing label in question omitted by the USPS, the label includes an official USPS notation in the form of a USPS receipt stamp dated July 11, 2003. The same "Express Mail" receipt number appears on the original Application Transmittal Letter, which includes a statement of express mailing dated July 11, 2003.

The Office considers the date the paper or fee shown as deposited as "Express Mail" to be the "date-in" on the Express Mail label. See MPEP 513. That is the date that verifies that the package was actually mailed. The evidence is convincing that the application was deposited as "Express Mail" with the U. S. Postal Service on July 11, 2003.

This application file is being forwarded to the Office of Initial Patent Examination Division for further **processing with a filing date of July 11, 2003.** Thereafter, the application file will be forwarded to Technology Center 2800 for examination in due course.

Telephone inquiries concerning this matter may be directed to Marianne Morgan at (703) 306-3475.

Sherry Brinkley
Petitions Examiner
Office of Petitions
Office of the Deputy Commissioner
For Patent Examination Policy

UNITED STATES PATENT AND TRADEMARK OFFICE

Commissioner for Patents
United States Patent and Trademark Office
P.O. Box 1450
Alexandria, VA 22313-1450
www.uspto.gov

MAILED
FROM DIRECTORS OFFICE

MAR 17 2005

TECHNOLOGY CENTER 3600

EUGENE BYRD
P.O. BOX 2607
FAIRFAX, VA 22031

In re applications of	:	**DECISION ON PETITIONS**
Richard T. Takeuchi and Robert M. Nakamura	:	**TO MAKE SPECIAL**
Application No. 10/617,861	:	**(APPLICANT'S AGE)**
Filed: July 14, 2003	:	
For: SUBTERRANEAN WASTE DISPOSAL PROCESS AND SYSTEM		

This is a decision on the petitions submitted on July 14, 2003 under 37 CFR 1.102 (c) to make the above-identified application special under the accelerated examination procedure set forth in MPEP 708.02, Section IV: Applicant's Age.

The petitions are **GRANTED**.

An application may be accorded special status upon the filing of a petition providing evidence showing that the applicant is at least 65 years old. Such a showing may be provided by evidence such as a birth certificate or a statement from the applicant.

The evidence submitted with the petition are two signed declarations indicating Mr. Takeuchi and Mr. Nakamura is at least 65 years of age.

The examiners are directed (1) to make an interference search for possible interfering applications, (2) to promptly examine this application out of turn, and (3) if any interfering application is discovered, to examine such application simultaneously and state in the first official letter of such application that it is being taken out of turn because of a possible interference.

Petitioners are advised that this application will continue to be special, throughout its entire prosecution and pendency, including interference or appeal, if any, only if petitioners makes a prompt ***bona fide*** effort, in response to each Office action, to place the application in condition for allowance, even if it is necessary to conduct an interview with the examiner to accomplish this purpose.

SUMMARY: Petitions to Make Special **GRANTED**.

Randolph C. Rose for

Kenneth J. Dorner
Special Programs Examiner
Technology Center 3600
(703) 308-0866

KJD/slb: 03/17/05

Under Secretary of Commerce for Intellectual Property and
Director of the United States Patent and Trademark Office
Washington, DC 20231
www.USPTO.gov

ddj

Mailed: February 8, 2005

Re application of:
KENJI DATE, et al.
Serial No. 10/617,872
Filed July 14, 2003
For: Porous Sintered Metal and Filter thereof, and
Method for Producing Porous Sintered Metal

DECISION ON PETITION

This is a decision on the PETITION TO ACCEPT COLOR DRAWINGS OR PHOTOGRAPHS 37 C.F.R. э 1.84(a)(2) or (b)(2), filed December 27, 2004. The petition includes (1) the fee as required by 37 CFR 1.17(h), (2) three sets of the color photographs, (3) an amendment to the specification which includes the language set forth in 37 CFR 1.84(a)(2)(iv), and (4) an explanation stating why color photographs are necessary.

A review of the application record indicates that all of the requirements for acceptance of color photographs have been met.

The Petition is **GRANTED**.

Deborah Jones
Supervisory Patent Examiner
Technology Center 1700

SUGHRUE MION, PLLC
2100 Pennsylvania Avenue N.W.
Washington D.C. 20037-3213

UNITED STATES PATENT AND TRADEMARK OFFICE

Commissioner for Patents
United States Patent and Trademark Office
P.O. Box 1450
Alexandria, VA 22313-1450
www.uspto.gov

3M INNOVATIVE PROPERTIES COMPANY
PO BOX 33427
ST. PAUL MN 55133-3427

COPY MAILED

APR 0 2 2007

OFFICE OF PETITIONS

ON PETITION

In re Application of	:
Phillip J. Bouic	:
Application No. 10/617,893	:
Filed: July 11, 2003	:
Attorney Docket No. 56852US004	:

This is a decision on the petition, filed November 16, 2006, under 37 CFR 1.181(a) to Withdraw Holding of Abandonment.

The petition under 37 CFR 1.181(a) is **GRANTED**.

The application was held abandoned for failure to timely reply to the Final Rejection of February 9, 2006.

The petition states that a timely Request for Continued Examination (RCE) and Amendment After Final was submitted on May 9, 2006 via facsimile. The USPTO's Image File Wrapper index misidentified the RCE which was indeed received on May 9, 2006, with the Amendment After Final.

In view of the above, the holding of abandonment is hereby withdrawn and the application restored to pending status.

Telephone inquiries concerning this decision should be directed to the undersigned at (571) 272-3208.

This matter is being referred to Technology Center AU 1772.

Karen Creasy

Karen Creasy
Petitions Examiner
Office of Petitions

UNITED STATES PATENT AND TRADEMARK OFFICE

Commissioner for Patents
United States Patent and Trademark Office
P. O. Box 1450
Alexandria, VA 22313-1450
www.uspto.gov

Patent Counsel
Applied Materials, Inc.
P.O. Box 450-A
Santa Clara CA 95052

COPY MAILED

APR 2 5 2006

OFFICE OF PETITIONS

In re Application of	:	
Dunkle	:	
Application No. 10/617,901	:	ON PETITION
Filed: July 10, 2003	:	
Attorney Docket No. AM 7134	:	

This is a decision on the petition, filed December 15, 2005, under 37 CFR 1.137(f), which is being treated as a petition under 37 CFR 1.137(b) to revive the instant nonprovisional application.

The petition under 37 CFR 1.137(b)is **GRANTED**.

Petitioner filed a nonpublication request on July 10, 2003. In the instant petition, petitioner states that the above-identified nonprovisional application is the subject of an application filed on February 5, 2004 in a foreign country, or under a mulitlateral international agreement that requires publication of applications 18 months after filing. However, the U.S. Patent and Trademark Office was unintentionally not notified of this filing within 45 days subsequent to the filing of the subject application.

In view of the above, this application became abandoned pursuant to 35 U.S.C. §122(b)(2)(B)(iii) and 37 CFR 1.213(c) for failure to timely notify the Office of the filing of an application in a foreign country, or under a multilateral international agreement that requires publication of applications 18 months after filing.

A petition under 37 CFR 1.137(b) to revive for failure to timely notify the Office of the filing of an application in a foreign country must be accompanied by:

(1) the required reply, which is met by the notification of such filing in a foreign country or under a multinational treaty;

(2) the petition fee as set forth in 37 CFR 1.17(m); and

(3) a statement that the entire delay in filing the required reply from the due date of the reply until the filing of a grantable petition was unintentional.

The instant petition has been found to be in compliance with 37 CFR 1.137(b). Accordingly, the failure to timely notify the Office of a foreign or international filing within 45 days after the date of filing of such foreign or international application as provided by 35 U.S.C. § 122(b)(2)(B)(iii) and 37 CFR 1.213(c) is accepted as having been unintentionally delayed.

The previous Request and Certification under 35 U.S.C. § 122(b)(2)(B)(i) has been rescinded. A Communication Regarding Rescission of Nonpublication Request and/or Notice of Foreign Filing which sets forth the projected publication date of July 27, 2006 accompanies this decision on petition.

Any inquiries concerning this decision may be directed to the undersigned at (571) 272-3203.

This application file is being returned to Technology Center Art Unit 2166.

Charles Steven Brantley
Senior Petitions Attorney
Office of Petitions

ATTACHMENT: Communication Regarding Rescission of Nonpublication Request and/or Notice of Foreign Filing

UNITED STATES PATENT AND TRADEMARK OFFICE

Commissioner for Patents
United States Patent and Trademark Office
P.O. Box 1450
Alexandria, VA 22313-1450
www.uspto.gov

COPY MAILED
NOV 2 8 2006
OFFICE OF PETITIONS

ANDRUS, SCEALES, STARKE & SAWALL, LLP
100 EAST WISCONSIN AVENUE, SUITE 1100
MILWAUKEE WI 53202

In re Application of

Forest A. Hatcher
Application No. 10/617,913
Filed: July 11, 2003
Attorney Docket No. 4239-00009

DECISION ON PETITION
TO WITHDRAW
FROM RECORD

This is a decision on the Request to Withdraw as attorney or agent of record under 37 C.F.R. § 1.36(b), filed August 31, 2006.

The request is **NOT APPROVED**.

A grantable request to withdraw as attorney/agent of record must be signed by every attorney/agent seeking to withdraw or contain a clear indication that one attorney is signing on behalf of another/others. A request to withdraw will not be approved unless at least 30 (thirty) days would remain between the date of approval and the later of the expiration date of a time to file a response or the expiration date of the maximum time period which can be extended under 37 C.F.R. § 1.136(a).

The Office cannot approve the request at this time since the reasons provided do not meet any of the conditions under the mandatory or permissive categories enumerated in 37 CFR 10.40. Section 10.40 of Title 37 of the Code of Federal Regulation states, "[a] practitioner shall not withdraw from employment in a proceeding before the Office without permission from the Office[.]" More specifically, 37 CFR 10.40 states, "[i]f paragraph (b) of this section is not applicable, a practitioner may not request permission to withdraw in matter pending before the Office unless such request or such withdrawal is" for one the permissive reasons listed in 37 CFR 10.40(c). The reasons set forth in the request, ***transfer of responsibility for case to another law firm***, do not meet any the conditions set forth in 37 CFR 10.40.

All future communications from the Office will continue to be directed to the above-listed address until otherwise notified by applicant.

Telephone inquiries concerning this decision should be directed to Terri Williams at 571-272- 2991.

Terri Williams
Petitions Examiner
Office of Petitions

cc: **Keisling, Pieper & Scott, PLC**
One East Center Street
Suite 217
Fayetteville, AK 72701

UNITED STATES PATENT AND TRADEMARK OFFICE

Commissioner for Patents
United States Patent and Trademark Office
P.O. Box 1450
Alexandria, VA 22313-1450
www.uspto.gov

Andrus, Sceales, Starke & Sawall, LLP
100 East Wisconsin Avenue, Suite 1100
Milwaukee, WI 53202

COPY MAILED

JUL 24 2007

OFFICE OF PETITIONS

In re Application of	:	
Forest A. Hatcher	:	
Application No. 10/617,913	:	DECISION ON PETITION
Filed: July 11, 2003	:	TO WITHDRAW
Attorney Docket No. 4239-00009	:	FROM RECORD
	:	

This is a decision on the Request to Withdraw as attorney or agent of record under 37 C.F.R. § 1.36(b), filed December 22, 2006.

The request is **NOT APPROVED** as moot.

A review of the file record indicates that the power of attorney to Andrus, Sceales, Starke & Sawall, LLP has been revoked by the applicant of the patent application on March 21, 2007. Accordingly, the request to withdraw under 37 C.F.R. § 1.36(b) is moot.

All future communications from the Office will continue to be directed to the below-listed address until otherwise notified by applicant.

Telephone inquires concerning this decision should be directed to Terri Williams at 571-272-2991.

T. Williams
Terri Williams
Petitions Examiner
Office of Petitions

cc: **Ryan Kromholz & Manion, S.C.**
Post Office Box 26618
Milwaukee, WI 53226

UNITED STATES PATENT AND TRADEMARK OFFICE

Commissioner for Patents
United States Patent and Trademark Office
P.O. Box 1450
Alexandria, VA 22313-1450
www.uspto.gov

Myers Bigel Sibley & Sajovec
PO Box 37428
Raleigh, NC 27627

COPY MAILED

NOV 0 4 2003

OFFICE OF PETITIONS

In re Application of :
Wealthy Desai :
Application No. 10/617,959 :
Filed: July 11, 2003 :
Attorney Docket No. 9400-33 :

DECISION ON PETITION

This is a decision on the petition under 37 CFR 1.10, filed October 21, 2003, requesting that the above-identified application be accorded a filing date of July 11, 2003, rather than the presently accorded filing date of July 14, 2003.

Petitioner alleges that the application was deposited in Express Mail service on July 11, 2003. Petitioner did not provide a copy of the Express Mail Label with the present petition. The Express Mail label No. EV353610205US was placed on the original application papers located in the official file. In support of petitioner's allegation, petitioner submitted a copy of a computer printout from the United States Postal Service Track and Confirm Database. The printout indicated that the USPS accepted a package bearing Express Mail label No EV353610205US on July 11, 2003, at 5:48 pm in Raleigh, NC 27612.

In view of the above, the petition is **granted**. No petition fee is necessary.

This application file will be forwarded to the Office of Initial Patent Examination for correction of the filing date to July 11, 2003.

Telephone inquiries should be directed to the undersigned at (703) 306-5589.

Christina Tartera Donnell

Christina Tartera Donnell
Senior Petitions Attorney
Office of Petitions

UNITED STATES PATENT AND TRADEMARK OFFICE

Commissioner for Patents
United States Patent and Trademark Office
P.O. Box 1450
Alexandria, VA 22313-1450
www.uspto.gov

Paul M. Denk
763 S. New Ballas Road
St. Louis, MO 63141

COPY MAILED

MAR 17 2005

OFFICE OF PETITIONS

In re Application of
Fink et al.
Application No. 10/618,001
Filed: November 5, 2004
Attorney Docket No. 7327

Decision on Petition

This a decision on the petition under 37 CFR 1.137(b), filed November 5, 2004, to revive the above-identified application.

The petition is **granted.**

The above-identified application became abandoned for failure to reply in a timely manner to the Notice to File Missing Parts of Application (Notice) mailed October 14, 2003. The Notice set a period for reply of two (2) months from the mail date of the Notice. No extensions of time under the provisions of 37 CFR 1.136(a) were obtained. Accordingly, the above-identified application became abandoned on December 15, 2003. A Notice of Abandonment was mailed on October 20, 2004.

The instant petition requests revival of the application. Petitioner has met the requirements to revive the above-identified application pursuant to 37 CFR 1.137(b). Therefore, the petition is granted and the application is revived.

The fee for a petition under 37 CFR 1.137(b) on November 5, 2004, was $685. Petitioner submitted $640. Therefore, $45 was charged to petitioner's deposit account. In addition, $65 was charged to the deposit account since the declaration was submitted after the filing date for the application.

Petitioner may wish to note the address of record varies slightly from the address on the petition. If appropriate, petitioner may wish to request a change of address in order to include "Ste. 170" as part of the correspondence address.

37 CFR 1.137(b)(3) requires a statement that the entire delay in filing the required reply from the due date for the reply until the filing of a grantable petition pursuant to 37 CFR 1.137(b) was unintentional. If the statement contained in the instant petition varies from the language required by 37 CFR 1.137(b)(3), the statement contained in the instant petition is being construed as the statement required by 37 CFR 1.137(b)(3) and petitioner must notify the Office if this is **not** a correct interpretation of the statement contained in the instant petition.

The Office of Initial Patent Examination will be informed the application has been revived so that it may further process the application.

Telephone inquiries may be directed to Petitions Attorney Steven Brantley at (571) 272-3203.

Charles Steven Brantley
Petitions Attorney
Office of Petitions

SPE RESPONSE FOR CERTIFICATE OF CORRECTION

Paper No.: _____

DATE 3/26/09

TO SPE OF ART UNIT 2625

SUBJECT : Request for Certificate of Correction for Appl. No.: 10618013 Patent No.: 7391530 B2

Please respond to this request for a certificate of correction within 7 days.

FOR IFW FILES:

Please review the requested changes/corrections as shown in the **COCIN** document(s) in the IFW application image. No new matter should be introduced, nor should the scope or meaning of the claims be changed

Please complete the response (see below) and forward the completed response to scanning using document code COCI.

FOR PAPER FILES:

Please review the requested changes/corrections as shown in the attached certificate of correction. Please complete this form (see below) and forward it with the file to:

Certificates of Correction Branch (CofC)
South Tower - 9A22
Palm Location 7580
You can fax the Directors/SPE response to 571-270-9990

LAMONTE NEWSOME
Certificates of Correction Branch
703-308-9390 ext. 112

Thank You For Your Assistance

The request for issuing the above-identified correction(s) is hereby:
Note your decision on the appropriate box

- ☒ **Approved** — **All** changes apply.
- ☐ **Approved in Part** — Specify below which changes **do not** apply.
- ☐ **Denied** — State the reasons for denial below.

Comments _____

_____

_____

_____

SPE — 2625 Art Unit

UNITED STATES PATENT AND TRADEMARK OFFICE

Commissioner for Patents
United States Patent and Trademark Office
P.O. Box 1450
Alexandria, VA 22313-1450
www.uspto.gov

FITZPATRICK CELLA HARPER & SCINTO
30 ROCKEFELLER PLAZA
NEW YORK NY 10112-3800

COPY MAILED

DEC 22 2005

OFFICE OF PETITIONS

In re Application of	:	
Naito, et al.	:	
Application No. 10/618,027	:	DECISION ON PETITION
Filed: July 14, 2003	:	
Attorney Docket No. 00862.003098.1	:	

This is a decision on the "PETITION FOR CORRECTED FILING DATE", filed November 23, 2005, which is being treated as a petition under 37 C.F.R. § 1.53 to accord the above-identified application a filing date of July 14, 2003, with pages 150, 166, and 167 of the specification as part of the original disclosure.

The petition is **GRANTED**.

Application papers in the above-identified application were filed on July 14, 2003. However, on September 1, 2004, the Initial Patent Examination Division mailed applicants a "Notice of Omitted Item(s) in a Nonprovisional Application". Applicants were notified that the application papers had been accorded a filing date; however, pages 150, 166, and 167 of the specification appeared to have been omitted. The Notice gave applicants three options to respond: (1) contend by way of petition that the missing pages were in fact present on filing; (2) supply the missing items and accept their date of submission as the application filing date; or (3) take no action, which would be treated as constructive acceptance by applicants of the application as filed.

In response, applicants filed the missing pages of specification on September 14, 2004. The application was appropriately accorded the September 14, 2004 filing date.

With the instant petition, applicants now contend that pages 150, 166, and 167 of the specification were present on filing. In support thereof, applicant submitted a postcard receipt identifying this application, itemizing "Specification, claims and abstract 181 pages" as enclosed, bearing a United States Patent and Trademark Office date-stamp of July 14, 2003, and lacking any notation of non-receipt of any item listed.

A postcard receipt which itemizes and properly identifies the items which are being filed serves as *prima facie* evidence of receipt in the Office of all items listed thereon on the date stamped thereon by the Office. See MPEP 503.

The application is being forwarded to the Office of Initial Patent Examination (OIPE) for further processing with a filing date of July 14, 2003, using the application papers received in the Office on that date and pages 150, 166, and 167 of the specification as filed September 14, 2004 (and resupplied with the petition filed November 23, 2005).

Telephone inquiries related to this decision should be directed to the undersigned at 571-272-3207.

Cliff Congo

Cliff Congo
Petitions Attorney
Office of Petitions

UNITED STATES PATENT AND TRADEMARK OFFICE

COMMISSIONER FOR PATENTS
UNITED STATES PATENT AND TRADEMARK OFFICE
P.O. BOX 1450
ALEXANDRIA, VA 22313-1450
www.uspto.gov

Michael C. Martensen
Hogan & Hartson, LLP
One Tabor Center
1200 17th Street, Suite 1500
Denver, CO 80202

MAILED

FEB 12 2007

Technology Center 2100

In re Application of: Lee A. Burton
Application No. 10/618,041
Attorney Docket No. SRC027
Filed: July 11, 2003
For: SWITCH/NETWORK ADAPTER PORT INCORPORATING SHARED MEMORY RESOURCES SELECTIVELY ACCESSIBLE BY A DIRECT EXECUTION LOGIC ELEMENT AND ONE OR MORE DENSE LOGIC DEVICES

DECISION ON PETITION UNDER 37 C.F.R. 1.103(a) FOR SUSPENSION OF EXAMINATION

This paper provides the decision on the petition filed on December 27, 2006, under 37 C.F.R. § 1.103(a) for suspension of examination for a period of 6 months.

The Petition is **GRANTED.**

Applicable Prosecution History

Jun 01, 2006	Final Rejection mailed
Jul 21, 2006	After Final Amendment filed by applicant
Aug 04, 2006	Advisory action mailed; After Final Amendment was refused entry
Sep 29, 2006	Request Continue Examination filed, seeking to enter the After Final Amendment with the RCE, and also with a request to suspend examination for 3 months. After Final Amendment was entered with the filing of the RCE.
Dec 14, 2006	Non-Final action was mailed in response to the RCE
Dec 29, 2006	Instant Petition filed, requesting that examination of application

be suspended in accordance with 37 CFR§1.103(a) for a period of 6 months.

RELIEF REQUESTED

The Applicant respectfully requests that examination of U.S. Patent Application No.: 10/618,041 (instant application) be suspended in accordance with 37 CFR §1.103(a) for a period of 6 months.

OPINION

Petitioner asserts that instant application is a continuation-in-part to U.S. Patent Application No. 09/932,330 ("the '330 application"). Both the instant application and the '330 application were rejected as being obvious under 35 U.S.C. § 103(a) as being unpatentable over U.S. Patent No. 6,052,134 by Foster ("Foster") in view of U.S. Patent No. 4,972,457 by O'Sullivan ("O'Sullivan") under a similar analysis, and several of the issues, as identified in the prosecution of the '330 application, with respect to the patentability of '330 application are currently under appeal before the Board of Appeals and Interferences at the USPTO. Petitioner also asserts that common ground exists in the interpretation of Foster and O'Sullivan with respect to the patentability of both applications, and it is likely, according to the Petitioner that the resolution of the issues before the Board of Appeals with respect to the '330 application will have a direct bearing on the future prosecution of the instant application.

Petitioner asserts that there are currently no outstanding office actions for the instant application.

ANALYSIS

37 CFR 1.103. Suspension of action by the Office.
(c) Limited suspension of action after a request for continued application (RCE) under § 1.114 . On request of the applicant, the Office may grant a suspension of action by the Office under this paragraph after the filing of a request for continued examination in compliance with § 1.114 for a period not exceeding three months. Any request for suspension of action under this paragraph must be filed with the request for continued examination under § 1.114, specify the period of suspension, and include the processing fee set forth in § 1.17(i).

MPEP 709 states in part:
B. Request for Suspension Under 37 CFR 1.103(b) or (c)

1. Requirements
The Office will not grant the requested suspension of action unless the following requirements are met:
(A) the request must be filed with the filing of a design CPA or an RCE (applicants may use the check box provided on the transmittal form PTO/SB/29 or

PTO/SB/30, or submit the request on a separate paper);
(1) if the request is filed with an RCE, the RCE must be in compliance with 37 CFR 1.114, i.e., the RCE must be accompanied by a submission and the fee set forth in 37 CFR 1.17(e). Note that the payment of the RCE filing fee may not be deferred and the request for suspension cannot substitute for the submission;
(B) the request should specify the period of suspension in a whole number of months (maximum of 3 months). If the request specifies no period of suspension or a period of suspension that exceeds 3 months, the Office will assume that a 3-month suspension is requested; and
(C) the request must include the processing fee set forth in 37 CFR 1.17(i).

A careful review of the prosecution history, and the applicable papers, it is clear that the RCE was properly filed. A request for suspension of examination of instant application was filed with the filing of the RCE by checking the appropriate box on the transmittal form PTO/SB/30, and included the fee as set forth in 37 CFR 1.17(i). Hence the Request for Suspension of Examination of the instant application under 37 CFR 1.103(c) with the filing of the RCE was proper, and hence applicant was entitled to suspension of action for 3 months starting on 9/29/06 and ending on 12/29/2006.

Office issued an non-final office action on 12/14 2006. Since this office action was generated while the application was still in "suspension" status, the office action mailed 12/14/2006 is hereby vacated.

Applicant filed the instant petition on 12/27/2006 37 CFR 1.103(a), (while the application was still under suspension of examination 37 CFR 1.103(c)), to have the examination of application suspended for a period of 6 months.

37 CFR 1.103 States as follows:

37 CFR 1.103. Suspension of action by the Office.
(a) Suspension for cause . On request of the applicant, the Office may grant a suspension of action by the Office under this paragraph for good and sufficient cause. The Office will not suspend action if a reply by applicant to an Office action is outstanding. Any petition for suspension of action under this paragraph must specify a period of suspension not exceeding six months. Any petition for suspension of action under this paragraph must also include:
(1) A showing of good and sufficient cause for suspension of action; and
(2) The fee set forth in § 1.17(g), unless such cause is the fault of the Office.

A review of the prosecution history reveals that an office action is outstanding. However, as explained above, the office action was generated on 12/14/2006, during the period between 9/29/2006 and 12/29/2006, when the application was suspended from examination, and hence that office action has been vacated as noted above. Therefore, there are no outstanding office actions in this case. Therefore, the petition satisfies the requirement of 37 CFR 1.103(a) as outlined above.

Accordingly, the petition is **GRANTED**.

Any inquiry concerning this decision should be directed to the undersigned whose telephone number is (571) 272-4210.

Mano Padmanabhan
Quality Assurance Specialist,
Technology Center 2100, Work Group 2180

UNITED STATES PATENT AND TRADEMARK OFFICE

UNITED STATES DEPARTMENT OF COMMERCE
United States Patent and Trademark Office
Address: COMMISSIONER FOR PATENTS
P.O. Box 1450
Alexandria, Virginia 22313-1450
www.uspto.gov

BACHMAN & LAPOINTE, P.C.
900 CHAPEL STREET
SUITE 1201
NEW HAVEN, CT 06510

Mail Date: 04/21/2010

Applicant	: Brian J. Schwartz	: DECISION ON REQUEST FOR
Patent Number	: 7582004	: RECALCULATION of PATENT
Issue Date	: 09/01/2009	: TERM ADJUSTMENT IN VIEW
Appliction No	: 10/618,059	: OF WYETH AND NOTICE OF INTENT TO
Filed	: 07/11/2003	: ISSUE CERTIFICATE OF CORRECTION
		:

The Request for Recalculation is **GRANTED** to the extent indicated.

The patent term adjustment has been determined to be **443** days. The USPTO will *sua sponte* issue a certificate of correction reflecting the amount of PTA days determined by the recalculation.

Prior to the issuance of the certificate of correction, the USPTO will afford patentee an opportunity to be heard and request reconsideration. Accordingly, patentee has **one month or thirty (30) days**, whichever is longer, to file a request for reconsideration of this patent term adjustment calculation. See 35 U.S.C. 154(b)(3)(B)(ii) and 37 CFR 1.322(a)(4). No extensions of time will be granted under 37 CFR 1.136.

Patentee should use document code PET.OP if electronically filing a request for reconsideration of this patent term adjustment calculation. The patentee must also include the information required by 37 CFR 1.705(b)(2) and the fee required by 37 CFR 1.18(e). If patentee does not file a timely request for reconsideration of this patent term adjustment calculation including the information required by 37 CFR 1.705(b)(2) and the fee required by 37 CFR 1.18(e), the USPTO will issue a certificate of correction reflecting the PTA determination noted above.

Patentee should be aware that in order to preserve the right to review in the United States District Court for the District of Columbia of the USPTO patent term adjustment determination, patentee must ensure that he or she also take the steps required under 35 U.S.C. 154(b)(4)(A) in a timely manner. Nothing in the request for recalculation should be construed as providing an alternative time frame for commencing a civil action under 35 U.S.C. 154(b)(4)(A).

Any questions concerning this decision should be directed to the Office of Patent Legal Administration at 571-272-7702.

UNITED STATES PATENT AND TRADEMARK OFFICE

UNITED STATES DEPARTMENT OF COMMERCE
United States Patent and Trademark Office
Address: COMMISSIONER FOR PATENTS
P.O. Box 1450
Alexandria, Virginia 22313-1450
www.uspto.gov

BACHMAN & LAPOINTE, P.C.
900 CHAPEL STREET
SUITE 1201
NEW HAVEN, CT 06510

Mail Date: 05/18/2010

Applicant : Brian J. Schwartz
Patent Number : 7582004
Issue Date : 09/01/2009
Application No : 10/618,059
Filed : 07/11/2003

: NOTICE CONCERNING IMPROPER
: CALCULATION OF PATENT TERM
: ADJUSTMENT BASED UPON USPTO
: IMPROPERLY MEASURING REDUCTION
: PERIOD UNDER 37 CFR 1.704(c)(10).

The United States Patent and Trademark Office (USPTO) discovered that in processing the recent recalculation decisions mailed in response to patentee's filed Request for Recalculation of Patent Term Adjustment in view of Wyeth, the USPTO improperly measured the reduction period for reductions under 37 CFR 1.704(c)(10). Pursuant to 37 CFR 1.704(c)(10), patentee's reduction begins on the date of filing the amendment under 37 CFR 1.312 ("1.312 amendment") or other related paper and ends on the date that the Office mails a response to the filing of the 1.312 amendment or other paper. It has been discovered that during the recalculation, the calculation failed to the limit the reduction to the mail date of the response to the 1.312 amendment or other paper. Accordingly, patentee's reductions were greater than warranted.

This notice **VACATES** the previous GRANTED request for recalculation and provides patentee with a revised GRANTED recalculation.

The patent term adjustment has been determined to be **534** days. The USPTO will *sua sponte* issue a certificate of correction reflecting the amount of patent term adjustment (PTA) days determined by the recalculation.

Prior to the issuance of the certificate of correction, the USPTO will afford patentee an opportunity to be heard and request reconsideration. Accordingly, patentee has **one month or thirty (30) days** from the mail date of this notice, whichever is longer, to file a request for reconsideration of this PTA calculation. See 35 U.S.C. § 154(b)(3)(B)(ii) and 37 CFR 1.322(a)(4).

Patentee should use document code PET.OP if electronically filing a request for reconsideration of this PTA calculation. The patentee must also include the information required by 37 CFR 1.705(b)(2), and the fee required by 37 CFR 1.18(e). If patentee does not file a timely request for reconsideration of this PTA calculation, including the information required by 37 CFR 1.705(b)(2) and the fee required by 37 CFR 1.18(e), the USPTO will issue a certificate of correction reflecting the PTA determination noted above.

Patentee should be aware that in order to preserve the right of review of the USPTO's PTA determination in the United States District Court for the District of Columbia, patentee must ensure that the steps required under 35 U.S.C. § 154 (b)(4) are taken in a timely manner. Nothing in the request for recalculation should be construed as providing an alternative time frame for commencing a civil action under 35 U.S.C. § 154(b)(4).

UNITED STATES PATENT AND TRADEMARK OFFICE

UNITED STATES DEPARTMENT OF COMMERCE
United States Patent and Trademark Office
Address: COMMISSIONER FOR PATENTS
P.O. Box 1450
Alexandria, Virginia 22313-1450
www.uspto.gov

Weaver Austin Villeneuve & Sampson LLP
P.O. BOX 70250
OAKLAND, CA 94612-0250

Mail Date: 04/20/2010

Applicant	: Peter A. Panec	: DECISION ON REQUEST FOR
Patent Number	: 7590701	: RECALCULATION of PATENT
Issue Date	: 09/15/2009	: TERM ADJUSTMENT IN VIEW
Appliction No	: 10/618,089	: OF WYETH AND NOTICE OF INTENT TO
Filed	: 07/11/2003	: ISSUE CERTIFICATE OF CORRECTION
		:

The Request for Recalculation is **GRANTED** to the extent indicated.

The patent term adjustment has been determined to be **1099** days. The USPTO will *sua sponte* issue a certificate of correction reflecting the amount of PTA days determined by the recalculation.

Prior to the issuance of the certificate of correction, the USPTO will afford patentee an opportunity to be heard and request reconsideration. Accordingly, patentee has **one month or thirty (30) days**, whichever is longer, to file a request for reconsideration of this patent term adjustment calculation. See 35 U.S.C. 154(b)(3)(B)(ii) and 37 CFR 1.322(a)(4). No extensions of time will be granted under 37 CFR 1.136.

Patentee should use document code PET.OP if electronically filing a request for reconsideration of this patent term adjustment calculation. The patentee must also include the information required by 37 CFR 1.705(b)(2) and the fee required by 37 CFR 1.18(e). If patentee does not file a timely request for reconsideration of this patent term adjustment calculation including the information required by 37 CFR 1.705(b)(2) and the fee required by 37 CFR 1.18(e), the USPTO will issue a certificate of correction reflecting the PTA determination noted above.

Patentee should be aware that in order to preserve the right to review in the United States District Court for the District of Columbia of the USPTO patent term adjustment determination, patentee must ensure that he or she also take the steps required under 35 U.S.C. 154(b)(4)(A) in a timely manner. Nothing in the request for recalculation should be construed as providing an alternative time frame for commencing a civil action under 35 U.S.C. 154(b)(4)(A).

Any questions concerning this decision should be directed to the Office of Patent Legal Administration at 571-272-7702.

UNITED STATES PATENT AND TRADEMARK OFFICE

Commissioner for Patents
United States Patent and Trademark Office
P.O. Box 1450
Alexandria, VA 22313-1450
www.uspto.gov

COPY MAILED
OCT 0 2 2006
OFFICE OF PETITIONS

KIRKPATRICK & LOCKHART NICHOLSON GRAHAM LLP
STATE STREET FINANCIAL CENTER
ONE LINCOLN STREET
BOSTON MA 02111-2950

In re Application of :
Jason Lieblich et al. :
Application No. 10/618,092 : DECISION ON PETITION
Filed: July 11, 2003 : TO WITHDRAW
Attorney Docket No. RFS-001 : FROM RECORD

This is a decision on the Request to Withdraw as attorney or agent of record under 37 C.F.R. § 1.36(b), filed June 6, 2006.

The request is **NOT APPROVED**.

A grantable request to withdraw as attorney/agent of record must be signed by every attorney/agent seeking to withdraw or contain a clear indication that one attorney is signing on behalf of attorneys/agents associated with customer number 22832. A request to withdraw will not be approved unless at least 30 (thirty) days would remain between the date of approval and the later of the expiration date of a time to file a response or the expiration date of the maximum time period which can be extended under 37 C.F.R. § 1.136(a).

The Office cannot approve the request at this time since the reasons provided do not meet any of the conditions under the mandatory or permissive categories enumerated in 37 CFR 10.40. Section 10.40 of Title 37 of the Code of Federal Regulation states, "[a] practitioner shall not withdraw from employment in a proceeding before the Office without permission from the Office[.]" More specifically, 37 CFR 10.40 states, "[i]f paragraph (b) of this section is not applicable, a practitioner may not request permission to withdraw in matter pending before the Office unless such request or such withdrawal is" for one the permissive reasons listed in 37 CFR 10.40(c). The reasons set forth in the request, Responsibility for application has been transferred to another firm, do not meet any the conditions set forth in 37 CFR 10.40.

All future communications from the Office will continue to be directed to the above-listed address until otherwise notified by applicant.

Telephone inquiries concerning this decision should be directed to Charles Smoot at 571-272- 3299.

David Bucci
Petitions Examiner
Office of Petitions

cc: John D. Lanza
Choate, Hall & Stewart
Two International Place
Boston, MA 02110

UNITED STATES PATENT AND TRADEMARK OFFICE

Commissioner for Patents
United States Patent and Trademark Office
P.O. Box 1450
Alexandria, VA 22313-1450
www.uspto.gov

Thompson & Knight L.L.P.
Patent Prosecution Department
98 San Jose Blvd., Suite 1900
Austin, TX 78701

COPY MAILED

SEP 06 2006

OFFICE OF PETITIONS

In re Application of

James Clarence Kroll et al.
Application No. 10/618,094
Filed: July 11, 2003
Attorney Docket No. 503409.000002

DECISION ON PETITION
TO WITHDRAW
FROM RECORD

This is a decision on the Request to Withdraw as attorney or agent of record under 37 C.F.R. § 1.36(b), filed April 26, 2006.

The request is **APPROVED**.

A grantable request to withdraw as attorney/agent of record must be signed by every attorney/agent seeking to withdraw or contain a clear indication that one attorney is signing on behalf of another/others. A request to withdraw will not be approved unless at least 30 (thirty) days would remain between the date of approval and the later of the expiration date of a time to file a response or the expiration date of the maximum time period which can be extended under 37 C.F.R. § 1.136(a).

The request was signed by Herbert J. Hammond on behalf of all attorneys of record who are associated with Customer No. 27644.

All attorneys/agents associated with the Customer No. 27644 have been withdrawn.

Applicant is reminded that there is no attorney of record at this time.

All future correspondence will be directed to the first named inventor James Clarence Kroll at the address indicated below.

There is no outstanding Office action at this time.

Telephone inquiries concerning this decision should be directed to Terri Williams at 571-272-2991.

Amelia Au
Petitions Examiner
Office of Petitions

cc: James Kroll
6747 St. Highway 204
Nacogdoches, TX 75964

UNITED STATES PATENT AND TRADEMARK OFFICE

UNITED STATES DEPARTMENT OF COMMERCE
United States Patent and Trademark Office
Address: COMMISSIONER FOR PATENTS
P.O. Box 1450
Alexandria, Virginia 22313-1450
www.uspto.gov

APPLICATION NUMBER	FILING OR 371 (c) DATE	FIRST NAMED APPLICANT	ATTY. DOCKET NO./TITLE
10/618,094	07/11/2003	James Clarence Kroll	503409.000002

CONFIRMATION NO. 3824

OC0000000020281955

OC000000020281955

27644
THOMPSON & KNIGHT L.L.P.
PATENT PROSECUTION DEPARTMENT
98 SAN JACINTO BLVD., SUITE 1900
AUSTIN, TX 78701

Date Mailed: 09/01/2006

NOTICE REGARDING CHANGE OF POWER OF ATTORNEY

This is in response to the Power of Attorney filed 04/26/2006.

- The withdrawal as attorney in this application has been accepted. Future correspondence will be mailed to the new address of record. 37 CFR 1.33.

T. Williams

TERRI S WILLIAMS
OP (571) 272-2991

FORMER ATTORNEY/AGENT COPY

UNITED STATES PATENT AND TRADEMARK OFFICE

UNITED STATES DEPARTMENT OF COMMERCE
United States Patent and Trademark Office
Address: COMMISSIONER FOR PATENTS
P.O. Box 1450
Alexandria, Virginia 22313-1450
www.uspto.gov

APPLICATION NO.	FILING DATE	FIRST NAMED INVENTOR	ATTORNEY DOCKET NO.	CONFIRMATION NO.
10/618,095	07/11/2003	Kristofer J. James	279.645US1	3840

21186 7590 05/09/2005

SCHWEGMAN, LUNDBERG, WOESSNER & KLUTH, P.A.
P.O. BOX 2938
MINNEAPOLIS, MN 55402-0938

EXAMINER
TIBBITS, PIA FLORENCE

ART UNIT	PAPER NUMBER
2838	

DATE MAILED: 05/09/2005

Please find below and/or attached an Office communication concerning this application or proceeding.

UNITED STATES PATENT AND TRADEMARK OFFICE

Commissioner for Patents
United States Patent and Trademark Office
P.O. Box 1450
Alexandria, VA 22313-1450
www.uspto.gov

MAY - 9 2005

In re Application of JAMES ET AL.
Appl. No.: 10/618,095
Filed: July 11, 2003
For: INDICATOR OF REMAINING ENERGY IN STORAGE CELL OF IMPLANTABLE MEDICAL DEVICE

WITHDRAWAL FROM ISSUE
37 CFR 1.313

The purpose of this communication is to inform you that the above-identified application is being withdrawn from issue after payment of the issue fee due to the unpatentability of one or more claims. See 37 CFR 1.313(b)(3).

The issue fee and publication fee are refundable upon request. The applicant may request a refund, or may request that the fee be credited to a deposit account. However, applicant may wait until the application is either again found allowable or held abandoned. If the application is allowed, upon receipt of a new Notice of Allowance and Issue and Publication Fee Due, applicant may request that the previously submitted issue fee and publication fee be applied toward payment of the issue fee and publication fee in the amount identified on the new Notice of Allowance and Issue and Publication Fee Due. If the application is abandoned, applicant may request either a refund or a credit to a specified Deposit Account.

Telephone inquiries should be directed to Michael Sherry, Supervisory Patent Examiner, at (571) 272-2084.

The application is being forwarded to the examiner for action.

Richard K. Seidel
Director
Patent Examining Technology Center 2800

SCHWEGMAN, LUNDBERG, WOESSNER & KLUTH, P.A.
P.O. BOX 2938
MINNEAPOLIS, MN 55402-0938

UNITED STATES PATENT AND TRADEMARK OFFICE

UNITED STATES DEPARTMENT OF COMMERCE
United States Patent and Trademark Office
Address: COMMISSIONER FOR PATENTS
P.O. Box 1450
Alexandria, Virginia 22313-1450
www.uspto.gov

APPL NO.	FILING OR 371 (c) DATE	ART UNIT	FIL FEE REC'D	ATTY.DOCKET NO	DRAWINGS	TOT CLMS	IND CLMS
10/618,096	07/11/2002	1731	1904	SMD-135	3	71	4

CONFIRMATION NO. 4956

UPDATED FILING RECEIPT

OC000000013801626

22827
DORITY & MANNING, P.A.
POST OFFICE BOX 1449
GREENVILLE, SC 29602-1449

Date Mailed: 09/14/2004

Receipt is acknowledged of this regular Patent Application. It will be considered in its order and you will be notified as to the results of the examination. Be sure to provide the U.S. APPLICATION NUMBER, FILING DATE, NAME OF APPLICANT, and TITLE OF INVENTION when inquiring about this application. Fees transmitted by check or draft are subject to collection. Please verify the accuracy of the data presented on this receipt. **If an error is noted on this Filing Receipt, please write to the Office of Initial Patent Examination's Filing Receipt Corrections, facsimile number 703-746-9195. Please provide a copy of this Filing Receipt with the changes noted thereon. If you received a "Notice to File Missing Parts" for this application, please submit any corrections to this Filing Receipt with your reply to the Notice. When the USPTO processes the reply to the Notice, the USPTO will generate another Filing Receipt incorporating the requested corrections (if appropriate).**

Applicant(s)

Vladimir Hampl JR., Roswell, GA;
Alice Gu, Duluth, GA;
Kerry Mahone, Alpharetta, GA;

Assignment For Published Patent Application

Schweitzer-Mauduit International, Inc.

Power of Attorney:

Julian Dority–20268
Wellington Manning JR.–22376
James Bagarazzi–29609
Richard M. Moose–31226
Stephen Bondura–35070
Jeffrey Karmilovich–35915
Timothy Cassidy–38024
Frances Elliott–41598
Jason Johnston–45675
Neal Pierotti–45716

Domestic Priority data as claimed by applicant

Foreign Applications

If Required, Foreign Filing License Granted: 10/09/2003

The number of your priority application, to be used for filing abroad under the Paris Convention is,
US10/618,096

Projected Publication Date: 12/23/2004

Non-Publication Request: No

Early Publication Request: No

Title

Smoking articles having reduced carbon monoxide delivery

Preliminary Class

131

LICENSE FOR FOREIGN FILING UNDER
Title 35, United States Code, Section 184
Title 37, Code of Federal Regulations, 5.11 & 5.15

GRANTED

The applicant has been granted a license under 35 U.S.C. 184, if the phrase "IF REQUIRED, FOREIGN FILING LICENSE GRANTED" followed by a date appears on this form. Such licenses are issued in all applications where the conditions for issuance of a license have been met, regardless of whether or not a license may be required as set forth in 37 CFR 5.15. The scope and limitations of this license are set forth in 37 CFR 5.15(a) unless an earlier license has been issued under 37 CFR 5.15(b). The license is subject to revocation upon written notification. The date indicated is the effective date of the license, unless an earlier license of similar scope has been granted under 37 CFR 5.13 or 5.14.

This license is to be retained by the licensee and may be used at any time on or after the effective date thereof unless it is revoked. This license is automatically transferred to any related applications(s) filed under 37 CFR 1.53(d). This license is not retroactive.

The grant of a license does not in any way lessen the responsibility of a licensee for the security of the subject matter as imposed by any Government contract or the provisions of existing laws relating to espionage and the national security or the export of technical data. Licensees should apprise themselves of current regulations especially with respect to certain countries, of other agencies, particularly the Office of Defense Trade Controls, Department of State (with respect to Arms, Munitions and Implements of War (22 CFR 121-128)); the Office of Export Administration, Department of Commerce (15 CFR 370.10 (j)); the Office of Foreign Assets Control, Department of Treasury (31 CFR Parts 500+) and the Department of Energy.

NOT GRANTED

No license under 35 U.S.C. 184 has been granted at this time, if the phrase "IF REQUIRED, FOREIGN FILING LICENSE GRANTED" DOES NOT appear on this form. Applicant may still petition for a license under 37 CFR 5.12, if a license is desired before the expiration of 6 months from the filing date of the application. If 6 months has lapsed from the filing date of this application and the licensee has not received any indication of a secrecy order under 35 U.S.C. 181, the licensee may foreign file the application pursuant to 37 CFR 5.15(b).

UNITED STATES PATENT AND TRADEMARK OFFICE

UNITED STATES DEPARTMENT OF COMMERCE
United States Patent and Trademark Office
Address: COMMISSIONER FOR PATENTS
P.O. Box 1450
Alexandria, Virginia 22313-1450
www.uspto.gov

APPL NO.	FILING OR 371 (c) DATE	ART UNIT	FIL FEE REC'D	ATTY.DOCKET NO	DRAWINGS	TOT CLMS	IND CLMS
10/618,096	07/11/2003	1731	1904	SMD-135	3	71	4

CONFIRMATION NO. 4956

UPDATED FILING RECEIPT

OC000000013829131

22827
DORITY & MANNING, P.A.
POST OFFICE BOX 1449
GREENVILLE, SC 29602-1449

Date Mailed: 09/17/2004

Receipt is acknowledged of this regular Patent Application. It will be considered in its order and you will be notified as to the results of the examination. Be sure to provide the U.S. APPLICATION NUMBER, FILING DATE, NAME OF APPLICANT, and TITLE OF INVENTION when inquiring about this application. Fees transmitted by check or draft are subject to collection. Please verify the accuracy of the data presented on this receipt. **If an error is noted on this Filing Receipt, please write to the Office of Initial Patent Examination's Filing Receipt Corrections, facsimile number 703-746-9195. Please provide a copy of this Filing Receipt with the changes noted thereon. If you received a "Notice to File Missing Parts" for this application, please submit any corrections to this Filing Receipt with your reply to the Notice. When the USPTO processes the reply to the Notice, the USPTO will generate another Filing Receipt incorporating the requested corrections (if appropriate).**

Applicant(s)

Vladimir Hampl JR., Roswell, GA;
Alice Gu, Duluth, GA;
Kerry Mahone, Alpharetta, GA;

Assignment For Published Patent Application

Schweitzer-Mauduit International, Inc.

Power of Attorney:

Julian Dority--20268
Wellington Manning JR.--22376
James Bagarazzi--29609
Richard M. Moose--31226
Stephen Bondura--35070
Jeffrey Karmilovich--35915
Timothy Cassidy--38024
Frances Elliott--41598
Jason Johnston--45675
Neal Pierotti--45716

Domestic Priority data as claimed by applicant

Foreign Applications

If Required, Foreign Filing License Granted: 10/09/2003

The number of your priority application, to be used for filing abroad under the Paris Convention is,
US10/618,096

Projected Publication Date: 01/13/2005

Non-Publication Request: No

Early Publication Request: No

Title

Smoking articles having reduced carbon monoxide delivery

Preliminary Class

131

LICENSE FOR FOREIGN FILING UNDER
Title 35, United States Code, Section 184
Title 37, Code of Federal Regulations, 5.11 & 5.15

GRANTED

The applicant has been granted a license under 35 U.S.C. 184, if the phrase "IF REQUIRED, FOREIGN FILING LICENSE GRANTED" followed by a date appears on this form. Such licenses are issued in all applications where the conditions for issuance of a license have been met, regardless of whether or not a license may be required as set forth in 37 CFR 5.15. The scope and limitations of this license are set forth in 37 CFR 5.15(a) unless an earlier license has been issued under 37 CFR 5.15(b). The license is subject to revocation upon written notification. The date indicated is the effective date of the license, unless an earlier license of similar scope has been granted under 37 CFR 5.13 or 5.14.

This license is to be retained by the licensee and may be used at any time on or after the effective date thereof unless it is revoked. This license is automatically transferred to any related applications(s) filed under 37 CFR 1.53(d). This license is not retroactive.

The grant of a license does not in any way lessen the responsibility of a licensee for the security of the subject matter as imposed by any Government contract or the provisions of existing laws relating to espionage and the national security or the export of technical data. Licensees should apprise themselves of current regulations especially with respect to certain countries, of other agencies, particularly the Office of Defense Trade Controls, Department of State (with respect to Arms, Munitions and Implements of War (22 CFR 121-128)); the Office of Export Administration, Department of Commerce (15 CFR 370.10 (j)); the Office of Foreign Assets Control, Department of Treasury (31 CFR Parts 500+) and the Department of Energy.

NOT GRANTED

No license under 35 U.S.C. 184 has been granted at this time, if the phrase "IF REQUIRED, FOREIGN FILING LICENSE GRANTED" DOES NOT appear on this form. Applicant may still petition for a license under 37 CFR 5.12, if a license is desired before the expiration of 6 months from the filing date of the application. If 6 months has lapsed from the filing date of this application and the licensee has not received any indication of a secrecy order under 35 U.S.C. 181, the licensee may foreign file the application pursuant to 37 CFR 5.15(b).

UNITED STATES PATENT AND TRADEMARK OFFICE

Commissioner for Patents
United States Patent and Trademark Office
P.O. Box 1450
Alexandria, VA 22313-1450
www.uspto.gov

Date : October 3, 2006

Patent No. :6,811,307
Inventor(s) :Kenneth J. Crowe, et al.
Issued :November 02, 2004
Title :DTS Measurement of HV Cable Temperature Profile
Doc/.File No. :B6224.1640.4642

Re: Request for Certificate of Correction

Consideration has been given your request for the issuance of a certificate of correction for the above-identified patent under the provisions of Rule 1.322 and 1.323.

An error on a patent can be corrected by a certificate of correction, if appropriate. Accordingly, a petition under C.F.R. 1.182 is required to correct the alleged error concerning the inventor's names and addresses. Since this information is printed solely in accordance with the typewritten information provided on the Declaration, Oath or ADS, and since the error was the result of applicant's failure to comply with the requirement that the complete and correct information be provided accordingly, no correction is in order here under the provisions of Rules 1.322 or 1.323, unless a petition is granted.

Any petition under 37 CFR 1.182 should be directed to the attention of the Assistant Commissioner for Patents using the following mailing address or FAX number.

By Mail: Commissioner of Patents and Trademarks
Box PETITIONS
Washington, D.C. 20231

By FAX: (703) 308-6916
Attn: Office of Petitions

If the petition under 37 CFR 1.182 is filed and granted the patentee would be entitled to a certificate of correction under 37 CFR 1.323 (required fee currently $100).

Any telephone inquiry concerning this communication should be directed to Ms. A. Green at (703) 308-9380 ext. 123.

Cecelia B. Newman
Decisions & Certificates
of Correction Branch
(703) 308-9390 or (703) 308- 9380 ext. 123

Dennis T. Griggs
17950 Preston Road
Ste 100
Dallas, TX 75252

CBN/arg

UNITED STATES PATENT AND TRADEMARK OFFICE

Commissioner for Patents
United States Patent and Trademark Office
P.O. Box 1450
Alexandria, VA 22313-1450
www.uspto.gov
DIW Oct-05

KENNETH E. HORTON
KIRTON & MCCONKLE
60 EAST SOUTH TEMPLE
SUITE 1800
SALTLAKE CITY UT 84111

COPY MAILED

OCT 2 5 2005

OFFICE OF PETITIONS

In re Application of	:	
Joshi et al.	:	
Application No. 10/618,113	:	DECISION ON PETITION
Filed: 11 July, 2003	:	
Atty Docket No. 11948.21	:	

This is a decision on the petition filed on 13 October, 2005, under 37 CFR 1.137(b),[1] to revive the above-identified application.

The petition is **GRANTED**.

The application became abandoned on 2 June, 2005, for failure to file a proper reply to the final Office action mailed on 1 February, 2005, which set a three (3) month shortened statutory period for reply. On 27 May, 2005, petitioners filed an

---

[1] Effective December 1, 1997, the provisions of 3 CFR 1.137(b) now provide that where the delay in reply was unintentional, a petition may be filed to revive an abandoned application or a lapsed patent pursuant to 37 CFR 1.137(b). A grantable petition filed under the provisions of 37 CFR 1.137(b) must be accompanied by:

(1) the required reply, unless previously filed. In a nonprovisional application abandoned for failure to prosecute, the required reply may be met by the filing of a continuing application. In a nonprovisional utility or plant application filed on or after June 8, 1995, and abandoned for failure to prosecute, the required reply may also be met by the filing of a request for continuing examination in compliance with § 1.114. In an application or patent, abandoned or lapsed for failure to pay the issue fee or any portion thereof, the required reply must be the payment of the issue fee or any outstanding balance thereof.

(2) the petition fee as set forth in 37 CFR 1.17(m);

(3) a statement that the entire delay in filing the required reply from the due date for the reply until the filing of a grantable petition pursuant to 37 CFR 1.137(b) was unintentional. The Commissioner may required additional information where there is a question whether the delay was unintentional; and

(4) any terminal disclaimer (and fee as set forth in 37 CFR 1.20(d)) required pursuant to 37 CFR 1.137(c)).

amendment after final rejection and a one (1) month extension of time. The amendment did not place the case in condition for allowance, however, and an Advisory Action was mailed on 14 September, 2005. Notice of Abandonment was mailed on 15 September, 2005.

Petitioners have filed a Request for Continued Examination (RCE) and have indicated that the previously filed amendment (a copy has been provided with the petition) is the submission required under 37 CFR 1.114.

This application is being referred to Technology Center Art Unit 2891 for further processing.

Telephone inquiries concerning this matter may be directed to the undersigned at (571)272-3231.

D Wood

Douglas I. Wood
Senior Petitions Attorney
Office of Petitions

UNITED STATES PATENT AND TRADEMARK OFFICE

Commissioner for Patents
United States Patent and Trademark Office
P.O. Box 1450
Alexandria, VA 22313-1450
www.uspto.gov

RYAN, MASON & LEWIS, LLP
90 FOREST AVENUE
LOCUST VALLEY NY 11560

COPY MAILED

FEB 2 0 2007

OFFICE OF PETITIONS

In re Application of :
PUGLIESE, Pierluigi :
Application No. 10/618,118 : DECISION ON PETITION
Filed: July 11, 2003 :
Attorney Docket No. Pugliese31 :

This is a decision on the petition under 37 CFR 1.137(b), filed October 6, 2006, to revive the above-identified application. The requested petition fee is being charged to counsel's deposit account as authorized.

The petition is **GRANTED.**

The application became abandoned for failure to reply in a timely manner to the non-final Office action mailed, February 7, 2006, which set a shortened statutory period for reply of three (3) months. No extensions of time under the provisions of 37 CFR 1.136(a) were obtained. Accordingly, the application became abandoned on May 8, 2006.

The petition satisfies the requirements of 37 CFR 1.137(b) in that petitioner has supplied (1) the required reply in the form of an amendment; (2) the petition fee of $1500; and (3) an adequate statement of unintentional delay.

This application is being referred to the Technology Center Art Unit 2165.

Telephone inquiries concerning this decision should be directed to Monica Graves at (571) 272-7253.

Sherry D. Brinkley
Petitions Examiner
Office of Petitions

DATE: 12/4/07 APPLICATION NUMBER: 10 618 124

DOC CODE: PET DEC DOC DATE: _____

DELIVER THE ATTACHED FILE/DOCUMENT TO THE TC SCANNIG CENETER

CONTRACTOR: THE ATTACHED FILE/DOCUMENT MUST BE INDEXED AND SCANNED INTO IFW WITHIN 8 WORK HOURS; UPLOADING OF THE SCANNED IMAGES SHOULD OCCUR NO LATER THAN 16 WORK HOURS FOLLOWING RECEIPT OF THIS REQUEST

AFTER SCANNING, ORIGINAL DOCUMENTS SHOULD BE BOXED IN ACCORDANCE WITH INSTRUCTIONS

UNITED STATES PATENT AND TRADEMARK OFFICE

Commissioner for Patents
United States Patent and Trademark Office
P.O. Box 1450
Alexandria, VA 22313-1450
www.uspto.gov

Daniel Roy Stewart
817 Simond: Avenue
Salt Lake City UT 84116

12/4/07

In re Application of:
Stewart, Daniel Roy
Serial No. 10/618,124
Filed: Jul. 11, 2003
Docket: n/a
Title: COMBINATION WAIST PACK WHICH UNFOLDS TO PROVIDE A PROTECTIVE ACCESSORY SUCH AS A SEAT CUSHION, WATER RESISTANT OR INSULATED BARRIER TO KNEEL OR LAY DOWN UPON, OR OTHER APPAREL OR PADDED ARTICLES PROVIDING PROTECTION TO VARIOUS PARTS OF A PERSON FOR USE IN OUTDOOR SPORTS AND RECREATION. AN ADDITIONAL VERSION PROVIDES A HEAT OR CHEMICAL RESISTANT GARMENT

DECISION ON PETITION
UNDER 37 CFR § 1.181
To Withdraw Holding of
Abandonment

This is a decision on the petition filed on Oct. 10, 2007. The petitioner requests withdrawal of the holding of abandonment pursuant to 37 CFR 1.181(a).

The petition is **GRANTED.**

The present application was held abandoned for failure to timely respond to the non-responsive amendment letter mailed on Mar. 8, 2007, which set a one month shortened period for reply. Notice of abandonment was mailed on Sep. 19, 2007.

Petitioner asserts that a timely response to the non-responsive amendment letter was mailed to the Office on Mar. 29, 2007. The petitioner has supplied a copy of the amendment to the specification, a copy of signed delivery receipt bearing April 3, 2007 and a copy of self-addressed post card bearing a postmark date of Apr. 5, 2007. The petitioner also provided a signed copy of a certificate of mailing pursuant to 37 CFR § 1.8 dated Sep. 29, 2007.

As petitioner has provided convincing evidence that a timely reply to the non-responsive amendment letter mailed on Mar. 8, 2007 was filed with the Office on Apr. 3, 2007, there is no

abandonment in fact. Any inconvenience or delay caused to applicant is regretted.

In view of the above, the Notice of Abandonment mailed Sep. 19, 2007 is in error and is hereby vacated. The holding of abandonment is withdrawn. This application is being forwarded to the examiner in Art Unit 3782 for appropriate action.

PETITION GRANTED

Karen M. Young

Karen M. Young, Director
Technology Center 3700

SPE RESPONSE FOR CERTIFICATE OF CORRECTION

Paper No.: _____

DATE : 12/14/05

TO SPE OF : ART UNIT **2829**

SUBJECT : Request for Certificate of Correction on Patent No.: 10/618129 6940268

A response is requested with respect to the accompanying request for a certificate of correction.

Please complete this form and return with file, within **7** days to:
Palm location **7580, Certificates of Correction Branch – South Tower – 9A22**
If response is for an IFW, **return to employee (named below) via PUBSCofC Team in MADRAS.**
With respect to the change(s) requested, correcting Office and/or Applicant's errors, should the patent read as shown in the certificate of correction (COCIN)? No new matter should be introduced, nor should the scope or meaning of the claims be changed.

Thank You For Your Assistance

Angela Green
Certificates of Correction Branch
Tel. No. 703-305-9380 ext. 123

The request for issuing the above-identified correction(s) is hereby:
Note your decision on the appropriate box.

- ☐ **Approved** — **All** changes apply.
- ☒ **Approved in Part** — Specify below which changes **do not** apply.
- ☐ **Denied** — State the reasons for denial below.

Comments:
- See Attached -

[signature] **SPE**

2829 **Art Unit**

Attachment to SPE RESPONSE FOR CERTIFICATE OF CORRECTION

Under Comments (continued): The request for Certificate of Correction is Approved-in-Part. A total of one (1) reference will **not** be printed, noted as follows:

In the Matter of Australian Patent Application No. 688711 in the name of ABB Power T&D Company Inc. and In the Matter of Opposition Thereto by Electrowatt Technology Innovation Corporation, "Statement of Grounds and Particulars In Support of Opposition, August 12, 1998"

This reference was crossed through in the PTO Form 1449 filed with the IDS on October 14, 2003.

Russell M. Kobert
Patent Examiner
Group Art Unit 2829
May 2, 2006

UNITED STATES PATENT AND TRADEMARK OFFICE

Commissioner for Patents
United States Patent and Trademark Office
P.O. Box 1450
Alexandria, VA 22313-1450
www.uspto.gov

FENWICK & WEST LLP
SILICON VALLEY CENTER
801 CALIFORNIA STREET
MOUNTAIN VIEW CA 94041

COPY MAILED

MAY 04 2007

OFFICE OF PETITIONS

In re Application of	:	
Albert K. Chin	:	
Application No. 10/618,140	:	DECISION ON PETITION
Filed: July 10 2003	:	TO WITHDRAW
Attorney Docket No. 23488-07931	:	FROM RECORD
	:	

This is a decision on the Request to Withdraw as attorney or agent of record under 37 C.F.R. § 1.36(b), filed December 18, 2006.

The request is **DISMISSED** as moot.

A review of the file record indicates that the power of attorney to Fenwick & West, LLP has been revoked by the assignee of the patent application on February 20, 2007. Accordingly, the request to withdraw under 37 C.F.R. § 1.36(b) is moot.

All future communications from the Office will continue to be directed to the below-listed address until otherwise notified by applicant.

Telephone inquires concerning this decision should be directed to undersigned at 571-272-1642.

April M. Wise
Petitions Examiner
Office of Petitions

cc: JASON R. KRAUS
FAEGRE & BENSON
2200 WELLS FARGO CENTER
90 SOUTH SEVENTH STREET
MINNEAPOLIS, MN 55402-3901

UNITED STATES PATENT AND TRADEMARK OFFICE

COMMISSIONER FOR PATENTS
UNITED STATES PATENT AND TRADEMARK OFFICE
P.O. BOX 1450
ALEXANDRIA, VA 22313-1450
www.uspto.gov

DLA PIPER RUDNICK GRAY CARY US, LLP
4365 EXECUTIVE DRIVE
SUITE 1100
SAN DIEGO CA 92121-2133

COPY MAILED

JUN 01 2005

OFFICE OF PETITIONS

Applicant: Epstein et al.
Appl. No.: 10/618,183
Filing Date: July 10, 2003
Title: INJECTION OF BONE MARROW-DERIVED CELLS AND MEDIUM FOR ANGIOGENESIS
Attorney Docket No.: 330142-44
Pub. No.: US 2004/0131601 A1
Pub. Date: July 8, 2004

This is in response to the request for a corrected patent application publication under 37 CFR 1.221(b), which was received on May 12, 2005.

The request is DISMISSED.

The instant request is that the patent application publication be republished because the publication contains an error on the front page of the publication, as it improperly lists the assignee as Foundry Networks, Inc. and the assignee is Myocardial Therapeutics, Inc.

The request is dismissed, as an attorney did not sign the paper in compliance with 37 CFR 1.31-1.34 and 37 CFR 10.10. Applicant is reminded that only registered practitioners may practice before the USPTO.

Furthermore, 37 CFR 1.221(b) is applicable "only when the Office makes a material mistake which is apparent from Office records . . . Any request for a corrected publication or revised patent application publication other than provided as provided in paragraph (a) of this section must be filed within two months from the date of the patent application publication. This period is not extendable." A material mistake must affect the public's ability to appreciate the technical disclosure of the patent application publication, to determine the scope of the patent application publication, or to determine the scope of the provisional rights that an applicant may seek to enforce upon issuance of a patent.[1]

---

[1] Changes to Implement Eighteen-Month Publication of Patent Applications, 65 FR 57023, 57038 (Sept. 20, 2000), 1239 Off. Gaz. Pat. Office Notices 63, 75 (Oct. 10, 2000) (final rule).

The request for corrected publication received on May 12, 2005, would not have been timely filed under 37 CFR 1.221(b). An error in the assignment information would not be a material error.

The Office prints the assignee information as reflected on the transmittal letter or application data sheet, if provided by applicant and does not look at the assignment records for the assignment information.

On October 14, 2003, a Filing Receipt was mailed, which improperly listed the assignee as Foundry Networks, Inc. **To avoid this type of problem in the future, applicant's representative should make a request for a Corrected Filing Receipt** by either using the facsimile number (703-746-9195) on the Filing Receipt or mailing in a request.

It has been noted that the declaration submitted by applicant is improper, as it is not properly signed by all of the inventors, as Applicant submitted parts of at least two declarations, but not complete copies. While each inventor need not execute the same oath or declaration, each oath or declaration executed by an inventor must contain a complete listing of all inventors so as to clearly indicate what each inventor believes to the appropriate inventive entity. Applicant must submit complete copies of each declaration signed by the applicants. See MPEP 201.03.

It has been noted that the application data sheet (ADS) submitted with the application does not correctly list the filing date of application 09/868,411 and makes an improper reference to provisional application 60/126,800. Applicant should file a corrected ADS including the assignment information to insure that the patent if issued is correctly printed.

Inquires concerning this communication should be directed to Mark Polutta at (571) 272-7709.

Mark O. Polutta
Office of Patent Legal Administration
Office of the Deputy Commissioner
for Patent Examination Policy

Enclosure: Corrected Filing Receipt

UNITED STATES PATENT AND TRADEMARK OFFICE

Commissioner for Patents
United States Patent and Trademark Office
P.O. Box 1450
Alexandria, VA 22313-1450
www.uspto.gov

ALLEN R. KIPNES
WATOV & KIPNES, PC
P. O. BOX 247
PRINCETON JUNCTION, NJ 08550

COPY MAILED

AUG 0 2 2007

OFFICE OF PETITIONS

In re Application of	:	
Petros Gebreselassie et al	:	
Application No. 10/618,202	:	DECISION GRANTING PETITION
Filed: July 11, 2003	:	UNDER 37 CFR 1.313(c)(2)
Attorney Docket No. PC25311-07-LAV	:	

This is a decision on the petition, filed July 30, 2007, under 37 CFR 1.313(c)(2) to withdraw the above-identified application from issue after payment of the issue fee.

The petition is **GRANTED**.

The above-identified application is withdrawn from issue for consideration of a submission under 37 CFR 1.114 (request for continued examination). See 37 CFR 1.313(c)(2).

Petitioner is advised that the issue fee paid on April 9, 2007 in the above-identified application cannot be refunded. If, however, the above-identified application is again allowed, petitioner may request that it be applied towards the issue fee required by the new Notice of Allowance.[1]

Telephone inquiries should be directed to the undersigned at (571) 272-3218.

This matter is being referred to Technology Center AU 1761 for processing of the request for continued examination under 37 CFR 1.114 and for consideration of the Information Disclosure Statement.

Frances Hicks
Petitions Examiner
Office of Petitions

C:\Documents and Settings\fhicks\My Documents\470\aug10\618202.wpd

---

[1] *The request to apply the issue fee to the new Notice may be satisfied by completing and returning the new Part B – Fee(s) Transmittal Form (along with any balance due at the time of submission). Petitioner is advised that the Issue Fee Transmittal Form* ***must*** *be completed and timely submitted to avoid abandonment.*

UNITED STATES PATENT AND TRADEMARK OFFICE

Commissioner for Patents
United States Patent and Trademark Office
P.O. Box 1450
Alexandria, VA 22313-1450
www.uspto.gov

JAMES C. WRAY
1493 CHAIN BRIDGE ROAD
SUITE 300
MCLEAN, VA 22101

COPY MAILED

JUL 2 0 2005

OFFICE OF PETITIONS

ON PETITION

In re Application of :
Lawrence J. Torango :
Application No. 10/618,207 :
Filed: July 11, 2003 :
For: PROGRESSIVE WAGERING SYSTEM :

This is a decision on the petition under 37 CFR 1.313 (c)(2), filed June 13, 2005, to withdraw the above-identified application from issue after payment of the issue fee.

The petition is **GRANTED**.

The above-identified application is withdrawn from issue for consideration of a submission under 37 CFR 1.114 (request for continued examination). See 37 CFR 1.313(c)(2).

Petitioner is advised that the issue fee paid on February 25, 2005 in the above-identified application cannot be refunded. If, however, the above-identified application is again allowed, petitioner may request that it be applied towards the issue fee required by the new Notice of Allowance.[1]

Telephone inquiries should be directed to Wan Laymon at (571) 272-3220.

This matter is being referred to Technology Center AU 3713 for processing of the request for continued examination under 37 CFR 1.114.

Wan Laymon
Petitions Examiner
Office of Petitions
Office of the Deputy Commissioner
for Patent Examination Policy

---

[1] The request to apply the issue fee to the new Notice may be satisfied by completing and returning the new Issue Fee Transmittal Form PTOL-85(b), which includes the following language thereon: "Commissioner for Patents is requested to apply the Issue Fee and Publication Fee (if any) or re-apply any previously paid issue fee to the application identified above." Petitioner is advised that, whether a fee is indicated as being due or not, the Issue Fee Transmittal Form **must** be completed and timely submitted to avoid abandonment. Note the language in bold text on the first page of the Notice of Allowance and Fee(s) Due (PTOL-85).

UNITED STATES PATENT AND TRADEMARK OFFICE

UNITED STATES DEPARTMENT OF COMMERCE
United States Patent and Trademark Office
Address: COMMISSIONER FOR PATENTS
P.O. Box 1450
Alexandria, Virginia 22313-1450
www.uspto.gov

BAINWOOD HUANG & ASSOCIATES LLC
2 CONNECTOR ROAD
WESTBOROUGH, MA 01581

Mail Date: 04/30/2010

Applicant	: Jeffrey D. Provost	: DECISION ON REQUEST FOR
Patent Number	: 7613933	: RECALCULATION of PATENT
Issue Date	: 11/03/2009	: TERM ADJUSTMENT IN VIEW
Application No	: 10/618,211	: OF WYETH AND NOTICE OF INTENT TO
Filed	: 07/11/2003	: ISSUE CERTIFICATE OF CORRECTION
		:

The Request for Recalculation is **GRANTED** to the extent indicated.

The patent term adjustment has been determined to be **421** days. The USPTO will *sua sponte* issue a certificate of correction reflecting the amount of PTA days determined by the recalculation.

Prior to the issuance of the certificate of correction, the USPTO will afford patentee an opportunity to be heard and request reconsideration. Accordingly, patentee has **one month or thirty (30) days**, whichever is longer, to file a request for reconsideration of this patent term adjustment calculation. See 35 U.S.C. 154(b)(3)(B)(ii) and 37 CFR 1.322(a)(4). No extensions of time will be granted under 37 CFR 1.136.

Patentee should use document code PET.OP if electronically filing a request for reconsideration of this patent term adjustment calculation. The patentee must also include the information required by 37 CFR 1.705(b)(2) and the fee required by 37 CFR 1.18(e). If patentee does not file a timely request for reconsideration of this patent term adjustment calculation including the information required by 37 CFR 1.705(b)(2) and the fee required by 37 CFR 1.18(e), the USPTO will issue a certificate of correction reflecting the PTA determination noted above.

Patentee should be aware that in order to preserve the right to review in the United States District Court for the District of Columbia of the USPTO patent term adjustment determination, patentee must ensure that he or she also take the steps required under 35 U.S.C. 154(b)(4)(A) in a timely manner. Nothing in the request for recalculation should be construed as providing an alternative time frame for commencing a civil action under 35 U.S.C. 154(b)(4)(A).

Any questions concerning this decision should be directed to the Office of Patent Legal Administration at 571-272-7702.

UNITED STATES PATENT AND TRADEMARK OFFICE

UNITED STATES DEPARTMENT OF COMMERCE
United States Patent and Trademark Office
Address: COMMISSIONER FOR PATENTS
P.O. Box 1450
Alexandria, Virginia 22313-1450
www.uspto.gov

VOLPE AND KOENIG, P.C.
DEPT. ICC
UNITED PLAZA, SUITE 1600
30 SOUTH 17TH STREET
PHILADELPHIA, PA 19103

Mail Date: 04/21/2010

Applicant	: Jung-Lin Pan	: DECISION ON REQUEST FOR
Patent Number	: 7639729	: RECALCULATION of PATENT
Issue Date	: 12/29/2009	: TERM ADJUSTMENT IN VIEW
Appliction No	: 10/618,227	: OF WYETH AND NOTICE OF INTENT TO
Filed	: 07/11/2003	: ISSUE CERTIFICATE OF CORRECTION
		:

The Request for Recalculation is **GRANTED** to the extent indicated.

The patent term adjustment has been determined to be **1893** days. The USPTO will *sua sponte* issue a certificate of correction reflecting the amount of PTA days determined by the recalculation.

Prior to the issuance of the certificate of correction, the USPTO will afford patentee an opportunity to be heard and request reconsideration. Accordingly, patentee has **one month or thirty (30) days**, whichever is longer, to file a request for reconsideration of this patent term adjustment calculation. See 35 U.S.C. 154(b)(3)(B)(ii) and 37 CFR 1.322(a)(4). No extensions of time will be granted under 37 CFR 1.136.

Patentee should use document code PET.OP if electronically filing a request for reconsideration of this patent term adjustment calculation. The patentee must also include the information required by 37 CFR 1.705(b)(2) and the fee required by 37 CFR 1.18(e). If patentee does not file a timely request for reconsideration of this patent term adjustment calculation including the information required by 37 CFR 1.705(b)(2) and the fee required by 37 CFR 1.18(e), the USPTO will issue a certificate of correction reflecting the PTA determination noted above.

Patentee should be aware that in order to preserve the right to review in the United States District Court for the District of Columbia of the USPTO patent term adjustment determination, patentee must ensure that he or she also take the steps required under 35 U.S.C. 154(b)(4)(A) in a timely manner. Nothing in the request for recalculation should be construed as providing an alternative time frame for commencing a civil action under 35 U.S.C. 154(b)(4)(A).

Any questions concerning this decision should be directed to the Office of Patent Legal Administration at 571-272-7702.

UNITED STATES PATENT AND TRADEMARK OFFICE

Commissioner for Patents
United States Patent and Trademark Office
P.O. Box 1450
Alexandria, VA 22313-1450
www.uspto.gov

AMSTED Industries Incorporated
Two Prudential Plaza
Suite 1800
180 North Stetson Street
Chicago IL 60601

COPY MAILED

APR 18 2006

OFFICE OF PETITIONS

ON PETITION

In re Application of	:	
Fetterolf et al.	:	
Application No. 10/618,232	:	
Filed: July 14, 2003	:	
Attorney Docket No. 6235	:	

This is a decision on the petition under 37 C.F.R. § 1.137(b), filed March 27, 2006, to revive the above-identified application.

The petition is **GRANTED.**

The petition satisfies the conditions for revival pursuant to the provisions of 37 CFR 1.137(b) in that (1) the reply in the form of an Appeal Brief; (2) the petition fee; and (3) the required statement of unintentional delay have been received. Accordingly, the response has been accepted as having been unintentionally delayed.

This matter is being referred to Technology Center 3600 for further processing.

Telephone inquiries regarding this decision should be directed to the undersigned at (571) 272-3282.

Liana Chase
Petitions Examiner
Office of Petitions

UNITED STATES PATENT AND TRADEMARK OFFICE

UNDER SECRETARY OF COMMERCE FOR INTELLECTUAL PROPERTY AND
DIRECTOR OF THE UNITED STATES PATENT AND TRADEMARK OFFICE
WASHINGTON, DC 20231
www.uspto.gov

MAILED
FROM DIRECTORS OFFICE

FEB 2 4 2006

TECHNOLOGY CENTER 3600

Victor C. York
Creditcare Systems, LLC
1880 S. Dairy Ashford, Suite 180
Houston, Texas 77077

In re application of
Victor C. York, et al
Application No. 10/618,236 :
Filed: July 11, 2003 :
For: METHOD AND SYSTEM FOR OBTAINING PAYMENT FOR HEALTHCARE SERVICES USING A HEALTHCARE NOTE SERVICER :

DECISION ON REQUEST FOR WITHDRAWAL OF ATTORNEY

This is a decision on the request filed on July 13, 2004, under 37 CFR 1.36 and MPEP 402.06, requesting permission to withdraw as the attorney of record in the above-identified application.

The request is **NOT APPROVED AS MOOT**.

Under 37 CFR 1.36 an attorney may withdraw only upon application to and approval by the Commissioner. It should be noted that a withdrawal is effective when approved, not when filed. Besides giving due notice to his or her client and delivering to the client all papers and property to which the client is entitled as specified under 37 CFR 10.40, approval of such a request requires that the following conditions be met:

A) Each attorney of record must sign the notice of withdrawal, or the notice must contain a clear indication of one attorney signing on behalf of another, because the Office does not recognize law firms;

B) A proper reason for the withdrawal as enumerated in 37 CFR 10.40(b) or subsection (1)-(6) of 37 CFR 10.40(c) must be provided; and

C) If withdrawal is requested in accordance with 37 CFR 10.40(c) above, there must be at least 30 days between approval of the withdrawal and the later of the expiration date of a time period for reply or the expiration date of the period which can be obtained by a petition and fee for extension of time under 37 CFR 1.136(a).

The request to withdraw as attorney in the above-identified application is not approved as moot because the attorney making the request and the attorneys associated with Customer Number 26271, do not now have, and apparently never have had, power of attorney in this application.

Randolph A. Reese
Special Programs Examiner
Patent Technology Center 3600
(571) 272-6619

RAR/dcg: 02/23/06

cc: Fulbright & Jaworski, LLP
1301 McKinney, Suite 5100
Houston, TX 77010-3095

UNITED STATES PATENT AND TRADEMARK OFFICE

Commissioner for Patents
United States Patent and Trademark Office
P.O. Box 1450
Alexandria, VA 22313-1450
www.uspto.gov

VICTOR C. YORK
CREDITCARE SYSTEMS, LLC.
1880 S. DIARY ASHFORD
SUITE 180
HOUSTON TX 77077

COPY MAILED

MAR 3 1 2008

In re Application of	:	
YORK, Victor C. et al.	:	
Application No. 10/618,236	:	DECISION ON PETITION
Filed: July 11, 2003	:	TO WITHDRAW
Attorney Docket No. **HO-P02782US0**	:	FROM RECORD

This is a decision on the Request to Withdraw as attorney or agent under 37 C.F.R. § 1.36(b) or 37 C.F.R. § 10.40 filed February 21, 2008.

The request is **NOT APPROVED**.

A review of the file record indicates that JOHN K. BUCHE does not have power of attorney in this patent application nor is there any statement or evidence of record of employment in or otherwise being engaged in the proceedings in this patent application. Accordingly, the request to withdraw under 37 C.F.R. § 1.36(b) is not applicable.

A change of address was submitted on January 04, 2005 to the inventor Victor York and was made of record. Therefore, the address remains unchanged.

Telephone inquires concerning this decision should be directed to Tredelle Jackson at 571-272-2783.

Tredelle D. Jackson
Petitions Examiner
Office of Petitions

UNITED STATES PATENT AND TRADEMARK OFFICE

OCT 18 2006

Commissioner for Patents
United States Patent and Trademark Office
P.O. Box 1450
Alexandria, VA 22313-1450
www.uspto.gov

BANNER & WITCOFF
1001 G STREET N W
SUITE 1100
WASHINGTON DC 20001

In re Application of	:
Schneck et al.	:
Serial No.: 10/618,267	: PETITION DECISION
Filed: July 14, 2003	:
Attorney Docket No.: 001107.00355	:

This is a response to the petition under 37 CFR 1.59(b), filed July 14, 2003, to expunge information from the above identified application. The delay in acting on this petition is regretted, however it was only recently brought to the attention of the deciding authority.

Petitioner requests that a document cited July 14, 2003, as part of an Information Disclosure Statement be expunged from the record. Petitioner states either: (A) that the information contains trade secret material, proprietary material and/or material that is subject to a protective order which has not been made public; or (B) that the information submitted was unintentionally submitted and the failure to obtain its return would cause irreparable harm to the party who submitted the information or to the party in interest on whose behalf the information was submitted, and the information has not otherwise been made public. The $130.00 petition fee set forth in 37 CFR 1.17(h) will be charged to Deposit Account No. 19-0733.

This is an examined application. The proprietary material submitted is a reference to an unpublished patent application which is listed on Form 1449 with other published (non-proprietary) documents. Note M.P.E.P. 724.02:

> 724.02 [R-2] Method of Submitting Trade Secret, Proprietary, and/or Protective Order Materials
>
> Information which is considered by the party submitting the same to be either trade secret material or proprietary material, and any material subject to a protective order, must be clearly labeled as such and be filed in a sealed, clearly labeled, envelope or container. Each document or item must be clearly labeled as a "Trade Secret" document or item, a "Proprietary" document or item, or as an item or document "Subject To Protective Order." It is essential that the terms "Confidential," "Secret," and "Restricted" or "Restricted Data" not be used when marking these documents or items in order to avoid confusion with national security information documents which are marked with these terms (note also MPEP § 121). ... Of course, the envelope or container, as well as each of the documents or items, must be labeled with complete identifying information for the file to which it is directed, including the Office or area to which the envelope or container is directed. Examples of appropriate labels for such an envelope or container addressed to an application are as follows: (Appropriate changes would be made for papers filed in a reexamination file.)

**
B. "PROPRIETARY MATERIAL NOT OPEN TO PUBLIC. TO BE OPENED ONLY BY EXAMINER OR OTHER AUTHORIZED U.S. PATENT AND TRADEMARK OFFICE EMPLOYEE.
>DO NOT SCAN<
In re Application of
Application No.
Filed:
For: (Title of Invention)
TC Art Unit:
Examiner:
**

The envelope or container must be accompanied by a transmittal letter which also contains the same identifying information as the envelope or container. The transmittal letter must also state that the materials in the envelope or container are considered trade secrets or proprietary, or are subject to a protective order, and are being submitted for consideration under MPEP § 724. A petition under 37 CFR 1.59 and fee therefor (37 CFR 1.17(h)) to expunge the information, if found not to be important to a reasonable examiner in deciding whether to allow the application to issue as a patent, **>should< accompany the envelope or container.

M.P.E.P. states that proprietary information must be submitted as a separate submission and be properly labeled, as detailed above. The information submitted on Form 1449 does not comply with M.P.E.P. 724.02 and will not be expunged from the file.

The petition is **DENIED**.

Should there be any questions with respect to this decision, please contact Marianne C. Seidel, by mail addressed to: Director, Technology Center 1600, P.O. Box 1450, Alexandria, VA 22313-1450, or by telephone at 571-272-0584 or by facsimile transmission at general Office facsimile number, 703-872-9306.

George C. Elliott

George Elliott
Director, Technology Center 1600

UNITED STATES PATENT AND TRADEMARK OFFICE

Commissioner for Patents
United States Patent and Trademark Office
P.O. Box 1450
Alexandria, VA 22313-1450
www.uspto.gov

SILICON VALLEY PATENT AGENCY
7394 WILDFLOWER WAY
CUPERTINO CA 95014

COPY MAILED
AUG 0 4 2006
OFFICE OF PETITIONS

In re Application of :
He, et al. :
Application No. 10/618,272 : ON PETITION
Filed: July 11, 2003 :
Attorney Docket No. 2107-26 :

This is a decision on the petition under 37 CFR 1.181, filed June 1, 2006, to withdraw the holding of abandonment.

This application became abandoned for failure to timely file a proper reply to the non-final Office action mailed October 25, 2005, which set a one (1) month period for reply. Accordingly, this application became abandoned on November 26, 2005. A Notice of Abandonment was mailed on June 8, 2006

Petitioner asserts the Office action was not received. The showing required to establish non-receipt of an Office communication must include a statement from the practitioner stating that the Office communication was not received by the practitioner and attesting to the fact that a search of the file jacket and docket records indicates that the Office communication was not received. A copy of the docket record where the non-received Office communication would have been entered had it been received and docketed must be attached to and referenced in practitioner's statement. See Withdrawing the Holding of Abandonment When Office Actions Are Not Received; Notice 1156 Off. Gaz. Pat. Office 53 (November 16, 1993).

The required statements and docket records have been submitted and considered.

The petition is granted. In view thereof, the holding of abandonment is withdrawn.

The file is being forwarded to Technology Center 2800 for review of the "Response to Restriction Requirement," filed June 1, 2006, *in due course*.

Telephone inquiries concerning this matter may be directed to the undersigned at (571) 272-3228.

Edward J. Tannouse
Petitions Attorney
Office of Petitions
Office of the Deputy Commissioner
for Patent Examination Policy

UNITED STATES PATENT AND TRADEMARK OFFICE

COMMISSIONER FOR PATENTS
UNITED STATES PATENT AND TRADEMARK OFFICE
P.O. BOX 1450
ALEXANDRIA, VA 22313-1450
www.uspto.gov

WARNER-LAMBERT COMPANY
2800 PLYMOUTH RD
ANN ARBOR, MI 48105

COPY MAILED
AUG 29 2006
OFFICE OF PETITIONS

In re Application of Thomas E. Barta, et. al. Application No. 10/618,288 Filed: April 25, 2003 Attorney Docket No. 00988/1/US (6794-000053/U)	: : : : : :	ON PETITION

This is a decision on the petition under 37 CFR 1.137(b), filed on July 19, 2006, to revive the above-identified application.

The application became abandoned for failure to timely respond to the Notice of Allowance and Fee(s) Due mailed December 7, 2005.

The petition satisfies the requirements of 37 CFR 1.137(b) in that petitioner has supplied (1) the reply in the form of $1,400 for payment of the issue fee and $300 for payment of the publication fee; (2) the petition fee of $1,500; and (3) an adequate statement of unintentional delay. Therefore, the petition is **GRANTED**.

The file does not indicate a change of address has been submitted, although the address given on the petition differs from the address of record. If appropriate, a change of address should be filed in accordance with MPEP 601.03. A courtesy copy of this decision is being mailed to the address given on the petition; however, the Office will mail all future correspondence solely to the address of record.

This application file is being referred to the Office of Publications to be processed into a patent.

Telephone inquiries concerning this decision should be directed to the undersigned at (571) 272-3226.

Andrea Smith
Petitions Examiner
Office of Petitions

cc: Philip B. Polster, II
Pharmacia Corporation of Pfizer, Inc.
Patent Department
P.O. Box 1027
St. Louis, MO 63006

UNITED STATES PATENT AND TRADEMARK OFFICE

COMMISSIONER FOR PATENTS
UNITED STATES PATENT AND TRADEMARK OFFICE
P.O. BOX 1450
ALEXANDRIA, VA 22313-1450
www.uspto.gov

MAILED

APR 2 3 2004

Director's Office
Group 3700

Erik M. Arnhem
P.O. Box 46053
Los Angeles, CA 90046

In re application of Due Doan	: : :	**DECISION ON PETITION** **TO MAKE SPECIAL** **UNDER 37 CFR. 1.102(c)**
Serial Number: 10/618308 Filed: July 14, 2003	: :	

For: **WATER SUPPLY SYSTEM FOR MULTIPLE DWELLING UNITS**

This is a decision on the petition filed on August 27, 2003, under 37 CFR. 1.102(c) to make special the above identified application because of the age/health of the applicant. Since the requirements of the M.P.E.P Section 708.02 IV have been met, the petition will be GRANTED.

The examiner is directed (1) to make an interference search for possible interfering applications, (2) to promptly examine this application out of turn, and (3) if any interfering application is discovered, to examine such application simultaneously and state in the first official letter of such application that it is being taken out of turn because of a possible interference.

Petitioner is advised that this application will continue to be special, throughout its entire prosecution and pendency, including interference or appeal, if any, only is Petitioner makes a prompt bona-fide effort, in response to each Office action, to place the application in condition for allowance, even if it is necessary to conduct an interview with the Examiner to accomplish this purpose.

Summary: Decision on Petition **GRANTED**.

Richard A. Bertsch
Director
Technology Center 3700
(703) 308-0975

rt: 4/22/04

UNITED STATES PATENT AND TRADEMARK OFFICE

COMMISSIONER FOR PATENTS
UNITED STATES PATENT AND TRADEMARK OFFICE
P.O. BOX 1450
ALEXANDRIA, VA 22313-1450
www.uspto.gov

APR 19 2004

In re Application of	:	
Jennifer E. Marfino et al.	:	
Serial No. 10/618,310	:	DECISION ON PETITION
Filed: July 14, 2003	:	TO MAKE SPECIAL
For: BAKEWARE WITH PORTION	:	
MEASUREMENTS	:	

Applicant's petition, filed July 14, 2003, requests that this application be rendered special for examination in that applicant is over sixty-five (65) years of age.

The petition has been reviewed and is found to be in compliance with the requirements for special status as set forth in Section 708.02(IV) of the Manual of Patent Examining Procedure (MPEP).

PETITION GRANTED.

E. Rollins-Cross, Director
Technology Center 3700

Richard C. Litman
Litman Law Offices, Ltd.
P.O. Box 15035
Arlington, VA 22215

UNITED STATES PATENT AND TRADEMARK OFFICE

Commissioner for Patents
United States Patent and Trademark Office
P.O. Box 1450
Alexandria, VA 22313-1450
www.uspto.gov

O'MELVENY & MYERS, LLP
275 BATTERY STREET
SUITE 2600
SAN FRANCISCO CA 94111-3305

COPY MAILED

MAR 2 0 2007

OFFICE OF PETITIONS

In re Application of	:	
BARBAZETTE et al.	:	
Application No.: 10/618,313	:	DECISION
Filing Date: July 10, 2003	:	
Attorney's Docket No.: 34741-926	:	

This decision is in response to applicants' submission filed August 28, 2006, which includes both a petition to revive under 37 CFR 1.137(b) and a "PETITION TO WITHDRAW HOLDING OF ABANDONMENT BASED ON FAILURE TO RECEIVE OFFICE ACTION (MPEP §711.039(c)(I)(A))". The latter petition has properly been treated as a petition under 37 CFR 1.181.

The petition under 37 CFR 1.181 is **GRANTED** for the reasons set forth below.

The petition under 37 CFR 1.137(b) is **DISMISSED** as **MOOT** for the reasons set forth below.

Petition Under 37 CFR 1.181

If applicants can establish nonreceipt of the final Office action mailed January 20, 2006, then the application was never abandoned. In such case, the holding of abandonment will be withdrawn pursuant to 37 CFR 1.181. See MPEP § 711.03(c), para. I.A. The showing must include: (1) a statement by the practitioner that the Office action was not received by the practitioner; (2) a statement attesting that a search of the file jacket and docket records indicates that the Office action was not received; and (3) a copy of the docket record where the non-received Office action would have been entered had it been received (the docket record must also be referenced in practitioner's statement).

Items (1)-(3) have been met. Accordingly, the final Office action mailed January 20, 2006 and the Notice of Abandonment mailed July 26, 2006 are hereby VACATED.

Petition Under 37 CFR 1.137(b)

Because the Notice of Abandonment mailed July 26, 2006 has been withdrawn, the petition to revive under 37 CFR 1.137(b) is moot.

This application is being referred to Technology Center AU 2121 for remailing of the final Office action mailed January 20, 2006.

Telephone inquiries concerning this decision should be directed to the undersigned at (571) 272-3301.

Daniel Stemmer
Legal Examiner
Office of the Deputy Commissioner
for Patent Examination Policy

UNITED STATES PATENT AND TRADEMARK OFFICE

Commissioner for Patents
United States Patent and Trademark Office
P.O. Box 1450
Alexandria, VA 22313-1450
www.uspto.gov

FOLEY HOAG, LLP
PATENT GROUP, WORLD TRADE CENTER WEST
155 SEAPORT BLVD
BOSTON, MA 02110

COPY MAILED

APR 14 2008

OFFICE OF PETITIONS

In re Application of	:	
JIAO, Jin-An et al.	:	
Application No. 10/618,338	:	DECISION ON PETITION
Filed: July 11, 2003	:	TO WITHDRAW
Attorney Docket No. **TNA-005.04**	:	FROM RECORD
	:	

This is a decision on the Request to Withdraw as attorney or agent of record under 37 C.F.R. § 1.36(b), filed December 14, 2007.

The request is **MOOT** because a revocation of power of attorney has been previously filed.

A review of the file record indicates that the power of attorney to FOLEY HOAG, LLP has been revoked by the assignee of the patent application on March 06, 2008. Accordingly, the request to withdraw under 37 C.F.R. § 1.36(b) is moot.

All future communications from the Office will continue to be directed to the below-listed address until otherwise notified by applicant.

Telephone inquires concerning this decision should be directed to Tredelle Jackson at 571-272-2783.

Tredelle D. Jackson
Paralegal Specialist
Office of Petitions

cc: **MORRISON & FOERSTER LLP**
755 PAGE MILL RD
PALO ALTO CA 94304-1018

UNITED STATES PATENT AND TRADEMARK OFFICE

Commissioner for Patents
United States Patent and Trademark Office
P.O. Box 1450
Alexandria, VA 22313-1450
www.uspto.gov

MORRISON & FOERSTER LLP
755 PAGE MILL RD
PALO ALTO CA 94304-1018

MAILED

MAY 27 2010

OFFICE OF PETITIONS

In re Application of	:	
JIAO et al.	:	DECISION ON APPLICATION
Application No. 10/618,338	:	FOR
Filed: July 11, 2003	:	PATENT TERM ADJUSTMENT
Atty Docket No. 146392002520	:	

This is a decision on the APPLICATION FOR PATENT TERM ADJUSTMENT UNDER 37 CFR 1.705, filed December 23, 2009, which is properly treated under the provisions of 37 CFR 1.705(b). Applicants submit that the correct patent term adjustment to be indicated on the patent is three hundred forty (340) days, not one hundred sixty-nine (169) days as calculated by the Office as of the mailing of the initial determination of patent term adjustment. Applicants request this correction partly on the basis that the Office will take in excess of three years to issue this patent.

To the extent that the instant application for patent term adjustment requests reconsideration of the patent term adjustment as it relates to the Office's failure to issue the patent within three years of the filing date, the application for patent term adjustment under 37 CFR 1.705(b) is **DISMISSED as PREMATURE**.

Knowledge of the actual date the patent issues is required to calculate the amount, if any, of additional patent term patentees are entitled to for Office failure to issue the patent within three years. See 37 CFR 1.702(b). (This is true even where a request for continued examination (RCE) was filed). The computer will not undertake the § 1.702(b) calculation until the actual date of issuance of the patent has been determined.

Likewise, the computer will not calculate any further Office delay under 37 CFR 1.702(a)(4) or applicant delay under 37 CFR 1.704(c)(10) until the actual date of issuance of the patent has been determined. As such, the Office cannot make a determination on the correctness of the patent term adjustment until the patent has issued.

Requesting reconsideration of the patent term adjustment to be indicated on the patent under 37 CFR 1.705(b) based on the initial determination of patent term adjustment and a projected issuance date of the patent (or even the filing date of the request for continued examination) is premature. Accordingly, it is appropriate to dismiss such a request as premature.

Rather than file an application for patent term adjustment under 37 CFR 1.705(b) contesting the 37 CFR 1.702(b) calculation at the time of the mailing of the notice of allowance, applicants are advised that they may wait until the time of the issuance of the patent and file a request for reconsideration of the patent term adjustment pursuant to 37 CFR 1.705(d). As the USPTO does not calculate the amount of time earned pursuant to 37 CFR 1.702(b) until the time of the issuance of the patent, the Office will consider any request for reconsideration of the patent term adjustment due to an error in the calculation of 37 CFR 1.702(b) to be timely if the request for reconsideration is filed within two months of the issuance of the patent. However, as to all other bases for contesting the initial determination of patent term adjustment received with the notice of allowance, applicants must timely file an application for patent term adjustment prior to the payment of the issue fee.[1]

With respect to applicants' other basis for filing this paper, the application for patent term adjustment is **DISMISSED**.

---

[1] For example, if applicants dispute both the calculation of patent term adjustment under 37 CFR 1.702(a)(1) for Office failure to mail a first Office action or notice of allowance not later than fourteen months after the date on which the application was filed, and under 37 CFR 1.702(b) for Office failure to issue a patent within three years of the actual filing date of the application, then applicants must still timely file an application for patent term adjustment prior to the payment of the issue fee to contest the calculation of Office delay in issuing a first Office action or notice of allowance. See 37 CFR 1.705(b) and 35 U.S.C. 154(b)(3)(B). A dispute as to the calculation of the § 1.702(a)(1) period raised on request for reconsideration of patent term adjustment under 37 CFR 1.705(d) will be dismissed as untimely filed.

On September 28, 2009, the Office mailed the Determination of Patent Term Adjustment under 35 U.S.C. 154(b) in the above-identified application. The Notice stated that the patent term adjustment (PTA) to date is 169 days. On December 23, 2009, applicants timely submitted the instant application for patent term adjustment with payment of the issue fee.

Applicants assert that the reduction pursuant to 37 CFR 1.704(b) of 37 days for the filing of the response to the Notice to File Missing Parts mailed October 17, 2003, is not merited. Applicants contend that they submitted a complete response on December 15, 2003, within three months of the mail date of the Notice to File Missing Parts. Applicants aver that the response to the Notice to File Missing Parts included all of the documents necessary to fully comply with the Notice.

A review of the record indicates that the Office mailed a Notice to File Missing Parts of Nonprovisional Application on October 17, 2003, requiring the submission of a properly signed oath or declaration in compliance with § 1.63, the statutory basic filing fee, a late declaration surcharge, and additional claim fees. On December 15, 2003, the Office received the statutory basic filing fee, the late declaration surcharge, the additional claim fees, and a four-page declaration. On January 30, 2004, the Office mailed a Notice of Incomplete Reply acknowledging receipt of the reply on December 15, 2003, and advising applicants that the declaration was missing the signatures of inventors Wong and Wen and that it did not identify the citizenship of each inventor. The Notice informed applicants that they must submit a complete reply in the form of a new oath or declaration in compliance with § 1.63 within the extendable period set forth in the Notice of October 17, 2003, to avoid abandonment.

On February 23, 2004, applicants submitted a response to the Notice of Incomplete Reply asserting that the Notice was sent in error. Applicants argued that they submitted a complete reply on December 15, 2003, which included two declarations (8 pages) that identified the citizenship of each inventor and were signed by all of the joint inventors. In support of the assertion, applicants submitted a copy of the response to the Notice to File Missing Parts, the attached postcard copy, and a certificate of mailing dated December 12, 2003. Applicants asserted that the attached postcard copy and certificate of

mailing showed that a complete response, including the two declarations (8 pages), was mailed to the USPTO on December 12, 2003, and was timely filed.

A review of the application history reveals that applicants were properly assessed a delay of 37 days pursuant to 37 CFR 1.704(b) for the filing of the response to the Notice to File Missing Parts. Calculation of applicants' delay is based on the date of receipt of the response in the Office.

Initially, the Office notes that the copy of the postcard receipt submitted by applicants on petition does not contain a USPTO date-stamp of December 15, 2003, but rather shows a date-stamp of February 23, 2004. Therefore, the postcard receipt provides prima facie evidence of receipt in the Office of all items listed thereon on the date stamped by the USPTO, February 23, 2004. Thus, the postcard receipt cannot be used to establish that the two declarations were received by the Office on December 15, 2003. Furthermore, applicants' attention is directed to 37 CFR 1.703(f), which provides that "[t]he date indicated on any certificate of mailing or transmission under § 1.8 shall not be taken into account in this calculation" of patent term adjustment. MPEP 2731 states:

> The date indicated on a certificate of mailing is used only to determine whether the correspondence is timely (including whether any extension of the time and fee are required) so as to avoid abandonment of the application or termination or dismissal of proceedings. The actual date of receipt of the correspondence in the Office is used for all other purposes. See 37 CFR 1.8(a). Thus, while the date indicated on any certificate of mailing or transmission under 37 CFR 1.8 will continue to be taken into account in determining timeliness, the date of filing (37 CFR 1.6) will be the date used in a patent term adjustment calculation.

Therefore, applicants have not established that a complete response to the Notice to File Missing Parts was received in the Office until February 23, 2004. Thus, the period of adjustment was properly reduced by 37 days, the number of days in the period beginning on the day after the date that is three months after the date of mailing of the Notice to File Missing Parts, January 18, 2004, and ending on the date the complete reply was

filed, February 23, 2004. As applicants failed to engage in reasonable efforts to conclude prosecution of the application, the period of reduction of 37 days is warranted and will not be removed.

Next, applicants dispute the periods of reduction of 74 days and 60 days for the filing of Request for Continued Examination (RCE) on June 29, 2007, and November 18, 2008, respectively. Specifically, applicants assert:

> [A]n Office Action was issued on January 16, 2007. Applicants responded in a timely manner to [the] Office Action on April 13, 2007. Therefore, based on 35 USC 154(b)(2)(C)(ii) and 37 CFR 1.704(b), there was no delay on the Applicants' part. An Advisory Action was issued June 4, 2007 in response to Applicants' response. Applicants filed a Request for Continued Examination (RCE) on June 29, 2007 in response to the Advisory Action. However, the USPTO's calculation subtracted 74 days from the Applicants from the time of the Office Action issuance to the filing of the RCE. Under 35 USC 154(b)(2)(C)(ii) and 37 CFR 1.704(b), Applicants have responded in a timely manner and as such, the deduction should be 0 days. In view of the foregoing, Applicants respectfully request reconsideration and correction to reflect that the Applicants' delay is 0 days.
>
> [T]he USPTO issued an Office Action on June 19, 2008. Applicants responded in a timely manner on August 19, 2008. Therefore, based on 35 USC 154(b)(2)(C)(ii) and 37 CFR 1.704(b), there was no delay on the Applicants' part. The USPTO issued an Advisory Action on October 17, 2008. Applicants filed a response with RCE on November 18, 2008. Again, the USPTO subtracted 60 days from the Applicants from the time of the Office Action issuance to the filing of the RCE. Under 35 USC 154(b)(2)(C)(ii) and 37 CFR 1.704(b), Applicants have responded in a timely manner and as such, the deduction should be 0 days. In view of the foregoing, Applicants respectfully request reconsideration and correction to reflect that the Applicants' delay is 0 days.

Petition, 12/23/09, pp. 2-3.

The Office has considered applicants' arguments, but finds them unpersuasive.

37 CFR 1.704(b) states that an applicant shall be deemed to have failed to engage in reasonable efforts to conclude processing or examination of an application for the cumulative total of any periods of time in excess of three months that are taken to reply to any notice or action by the Office making any rejection, objection, argument, or other request, measuring such three-month period from the date the notice or action was mailed or given to the applicant, in which case the period of adjustment set forth in § 1.703 shall be reduced by the number of days, if any, beginning on the day after the date that is three months after the date of mailing or transmission of the Office communication notifying the applicant of the rejection, objection, argument, or other request and ending on the date the reply was filed.

37 CFR 1.703(a)(3) states that the period of delay is the number of days beginning on the date after the date that is four months after the date a reply in compliance with 37 CFR 1.113(c) was filed and ending on the date of mailing of either an action under 35 U.S.C. 132, or a notice of allowance under 35 U.S.C. 151, whichever occurs first. "A reply under 37 CFR 1.113 is a reply to a final Office action, and a reply in compliance with 37 CFR 1.113 is a reply that cancels all of the rejected claims and removes all outstanding objections and requirements or otherwise places the application in condition for allowance." MPEP 2731. "Any amendment after final that does not cancel all of the rejected claims and remove all outstanding objections and requirements or otherwise place the application in condition for allowance is not a reply in compliance with 37 CFR 1.113(c)." Id.

Following a final Office action, the period at issue is first the period it takes applicant to file a reply in compliance with 37 CFR 1.113(c). Until such a reply is filed, applicant is subject to entry of a period of reduction for failure to engage in reasonable efforts to conclude processing or examination within the meaning of 37 CFR 1.704(b). The mailing of an Advisory Action is an indication that the reply filed did not comply with 37 CFR 1.113(c). It is not the Office's action within the meaning of 37 CFR 1.702(a)(2) and does not toll the period of applicant delay.

In this instance, applicants' reply on April 13, 2007 to the final Office action of January 16, 2007, as well as the reply on August 19, 2008 to the final Office action of June 19, 2008, were not in accordance with 37 CFR 1.113(c). Accordingly, the periods of reduction in patent term adjustment for applicant delay pursuant to 37 CFR 1.704(b) of 74 days (beginning on April 17, 2007 and ending on June 29, 2007) and 60 days (beginning on September 20, 2008 and ending on November 18, 2008), are warranted for failure to engage in reasonable efforts to conclude processing or examination.

In view thereof, the determination of patent term adjustment remains 169 days.

The Office acknowledges submission of the $200.00 fee set forth in 37 CFR 1.18(e) for consideration of the application for patent term adjustment under 37 CFR 1.705(b).

The Office of Data Management has been advised of this decision. This matter is being referred to the Office of Data Management for issuance of the patent.

Telephone inquiries specific to this matter should be directed to the undersigned at (571) 272-3211.

C. T. Donnell

Christina Tartera Donnell
Senior Petitions Attorney
Office of Petitions

UNITED STATES PATENT AND TRADEMARK OFFICE

Commissioner for Patents
United States Patent and Trademark Office
P.O. Box 1450
Alexandria, VA 22313-1450
www.uspto.gov

JOSEPH F. LEIGHTNER, ESQ.
INTERNATIONAL FLAVORS & FRAGRANCES INC.
521 WEST 57TH STREET
NEW YORK NY 10019

COPY MAILED

DEC 27 2004

OFFICE OF PETITIONS

In re Application of :
Mark L. Dewis et al :
Application No. 10/618,367 : ON PETITION
Filed: July 10, 2003 :
Attorney Docket No. IFF-59 :

This is a decision on the petition, filed December 22, 2004, under 37 CFR 1.313(c)(2) to withdraw the above-identified application from issue after payment of the issue fee.

The petition is **GRANTED**.

The above-identified application is withdrawn from issue for consideration of a submission under 37 CFR 1.114 (request for continued examination). See 37 CFR 1.313(c)(2).

Petitioner is advised that the issue fee paid on July 12, 2004 in the above-identified application cannot be refunded. If, however, the above-identified application is again allowed, petitioner may request that it be applied towards the issue fee required by the new Notice of Allowance.[1]

Telephone inquiries should be directed to the undersigned at (571) 272-3208.

The examiner of Technology Center AU 1621 will consider the request for continued examination under 37 CFR 1.114.

Karen Creasy

Karen Creasy
Petitions Examiner
Office of Petitions
Office of the Deputy Commissioner
for Patent Examination Policy

---

[1] The request to apply the issue fee to the new Notice may be satisfied by completing and returning the new Issue Fee Transmittal Form PTOL-85(b), which includes the following language thereon: "Commissioner for Patents is requested to apply the Issue Fee and Publication Fee (if any) or re-apply any previously paid issue fee to the application identified above." Petitioner is advised that, whether a fee is indicated as being due or not, the Issue Fee Transmittal Form **must** be completed and timely submitted to avoid abandonment. Note the language in bold text on the first page of the Notice of Allowance and Fee(s) Due (PTOL-85).

UNITED STATES PATENT AND TRADEMARK OFFICE

Commissioner for Patents
United States Patent and Trademark Office
P.O. Box 1450
Alexandria, VA 22313-1450
www.uspto.gov

TOWNSEND AND TOWNSEND AND CREW, LLP
TWO EMBARCADERO CENTER
EIGHTH FLOOR
SAN FRANCISCO, CA 94111-3834

MAILED

JUL 03 2006

Technology Center 2100

In re Application of: Steven McCanne, et al.
Application No. 10/618,369
Filed: July 10, 2003
For: SYSTEM FOR MULTIPOINT INFRASTRUCTURE TRANSPORT IN A COMPUTER NETWORK

DECISION ON REQUEST TO WITHDRAW AS ATTORNEY OR AGENT

This is a decision on the Request To Withdraw from Representation filed October 24, 2005.

A grantable request to withdraw as attorney of record should indicate thereon the present mailing addresses of the attorney(s) who is/are withdrawing from the record and of the applicant. The request for withdrawal must be signed by every attorney seeking to withdraw or contain a clear indication that one attorney is signing on behalf of another/others. A request to withdraw will not be approved unless at least 30 (thirty) days would remain between the date of approval and the later of the expiration date of a time to file a response or the expiration date of the maximum time period which can be extended under 37 C.F.R. § 1.136(a). The effective date of withdrawal is the date of decision and not the date of request. See M.P.E.P. § 402.06. 37 C.F.R. § 10.40(a) further requires that the applicant or patent owner be notified of the withdrawal of the attorney or agent.

The request is **GRANTED**.

All future communications from the U.S. Patent and Trademark Office (Office) will be directed to the below-listed address until otherwise notified by applicant. This correspondence address is provided by the withdrawn attorney(s). Applicant is reminded of the obligation to promptly notify the Office of any change in correspondence address to ensure receipt of all communications from the Office.

for

Vincent N. Trans
Special Program Examiner
Technology Center 2100
Computer Architecture, Software, and
Information Security
571-272-3613

cc: HICKMAN PALERMO TRUONG & BECKER, LLP
2055 GATEWAY PLACE
SUITE 550
SAN JOSE, CA 95110

UNITED STATES PATENT AND TRADEMARK OFFICE

Commissioner for Patents
United States Patent and Trademark Office
P.O. Box 1450
Alexandria, VA 22313-1450
www.uspto.gov

HICKMAN PALERMO TRUONG & BECKER, LLP
2055 GATEWAY PLACE
SUITE 550
SAN JOSE CA 95110

COPY MAILED

MAR 3 1 2008

In re Application of

MCCANNE, Steven et al.
Application No. 10/618,369
Filed: July 10, 2003
Attorney Docket No. **50269-0722**

DECISION ON PETITION
TO WITHDRAW
FROM RECORD

This is a decision on the Request to Withdraw as attorney or agent of record under 37 C.F.R. § 1.36(b), filed February 21, 2008.

The request is **NOT APPROVED**.

A grantable request to withdraw as attorney/agent of record must be signed by every attorney/agent seeking to withdraw or contain a clear indication that one attorney is signing on behalf of another/others. A request to withdraw will not be approved unless at least 30 (thirty) days would remain between the date of approval and the later of the expiration date of a time to file a response or the expiration date of the maximum time period which can be extended under 37 C.F.R. § 1.136(a).

The Office cannot approve the request at this time since the reasons provided do not meet any of the conditions under the mandatory or permissive categories enumerated in 37 CFR 10.40. Section 10.40 of Title 37 of the Code of Federal Regulation states, "[a] practitioner shall not withdraw from employment in a proceeding before the Office without permission from the Office[.]" More specifically, 37 CFR 10.40 states, "[i]f paragraph (b) of this section is not applicable, a practitioner may not request permission to withdraw in matter pending before the Office unless such request or such withdrawal is" for one the permissive reasons listed in 37 CFR 10.40(c). The reasons set forth in the request, application number has been mistakenly through attorney error, does not meet any of the conditions set forth in 37 CFR 10.40.

All future communications from the Office will continue to be directed to the above-listed address until otherwise notified by applicant.

Telephone inquiries concerning this decision should be directed to Tredelle Jackson at 571-272- 2783.

Tredelle D. Jackson
Petitions Examiner
Office of Petitions

SPE RESPONSE FOR CERTIFICATE OF CORRECTION

Paper No.: _____

DATE : 7-25-07

TO SPE OF : ART UNIT 2815

SUBJECT : Request for Certificate of Correction for Appl. No.: 10/618374 Patent No.: 7132702

Please respond to this request for a certificate of correction within 7 days.

Please review the requested changes/corrections as shown in the **COCIN** document(s) in the IFW application image. No new matter should be introduced, nor should the scope or meaning of the claims be changed.

Please chek Inventors

Please complete the response (see below) and forward the completed response to scanning using document code **COCX**.

Certificates of Correction Branch

703-308-9390 ext. 117

Thank You For Your Assistance

The request for issuing the above-identified correction(s) is hereby:

Note your decision on the appropriate box.

- [x] Approved — All changes apply.
- [ ] Approved in Part — Specify below which changes do not apply.
- [ ] Denied — State the reasons for denial below.

Comments: _____

2815

SPE Kenneth Parker Art Unit

UNITED STATES PATENT AND TRADEMARK OFFICE

Commissioner for Patents
United States Patent and Trademark Office
P.O. Box 1450
Alexandria, VA 22313-1450
www.uspto.gov

EDWARDS ANGELL PALMER & DODGE LLP
P.O. BOX 55874
BOSTON MA 02205

COPY MAILED

JUN 20 2008

In re Patent No. 7,305,059	:	
Issue Date: 12/04/2007	:	
Application No. 10/618,378	:	DECISION ON PETITION
Filed: 07/11/2003	:	
Attorney Docket No. 59498 (45107)	:	

This is a decision on the petition under 37 CFR 1.182, filed April 30, 2008, requesting issuance of a duplicate Letters Patent for the above-identified patent.

The petition is GRANTED.

The Office of Data Management is directed to issue a duplicate Letters Patent.

Telephone inquiries concerning this decision may be directed to the undersigned at (571) 272-3211. Inquiries regarding the issuance of a duplicate Letters Patent may be directed to Niomi Farmer, Office of Data Management at (703) 308-9250, Ext. 119.

A copy of this decision is being faxed to the Office of Data Management for issuance of a duplicate Letters Patent.

C. T. Donnell

Christina Tartera Donnell
Senior Petitions Attorney
Office of Petitions

cc: Niomi Farmer, Office of Data Management, South Tower, 8th Floor, Room C23 (Fax No. (571) 270-9937)

UNITED STATES PATENT AND TRADEMARK OFFICE

6-22-07

Commissioner for Patents
United States Patent and Trademark Office
P.O. Box 1450
Alexandria, VA 22313-1450
www.uspto.gov

Patent No. : 6,788,240 B2
Ser. No. : 10/618,398
Inventor(s) : Justin Reyneri, et. al.
Issued : September 7, 2004
Title : SINGLE-CHIP MASSIVELY PARALLEL ANALOG-TO-DIGITAL CONVERSION
Docket No. : PIX- P-071-1D

Re: Request for Certificate of Correction

Consideration has been given your request for the issuance of a certificate of correction for the above-identified patent under the provisions of Rule(s) 1.322 or 1.323.

Assignees' names and addresses (assignment data) printed in a patent, are based *solely* on information supplied in the appropriate space for identifying the assignment data, i.e., item 3 of the Issue Fee Transmittal Form PTOL-85B. Granting of a request under 37 CFR 3.81(b) is required to correct applicant's error providing ***incorrect or erroneous*** assignment data, *before* issuance of a Certificate of Correction, under 37 CFR 1.323 *(see Manual of Patent Examining Procedures (M.P.E.P) Chp.1400, sect. 1481).* This procedure is required *at any time after the issue fee is paid*, including after issuance of the patent.

In view of the foregoing, your request is hereby denied.

A request to correct the Assignee under 37 CFR 3.81(b) should include:

A. **the processing fee set forth in 37 CFR 1.117(h) (currently $130);**
B. a statement that the failure to include the correct assignee name on the PTOL-85B was inadvertent; and
C. a copy of the Notice of Recordation of Assignment Document, reflecting the reel and frame number where the assignment(s) is recorded and/or reflecting proof of *the date* the assignment was submitted for recordation.

In the Request, Applicant(s) may request that the file be forwarded to Certificates of Correction Branch, for issuance of a Certificate of Correction, if the Request is granted.

Any request under 37 CFR 3.81(b) should be directed to the following address or facsimile number:

By mail: Mail Stop PETITIONS
Commissioner for Patents
Post Office Box 1450
Alexandria, VA 22313-1450

By hand: Customer Service Window
Mail Stop Petitions
Randolph Building
401 Dulany Street
Alexandria, VA 22314

By fax: (703) 872-9306
ATTN: Office of Petitions

If a fee (currently $100) was previously submitted for consideration of a Request for Certificate of Correction, under CFR 1.323, to correct assignment data, , no additional fee is required.

Eva James
For Cecelia Newman
Decisions & Certificates
of Correction Branch
(703) **308-9390 ext. 124** or 105

Carmen C. Cook
Patent Law Group
2635 N. First Street
San Jose, CA 95134

ej

UNITED STATES PATENT AND TRADEMARK OFFICE

Commissioner for Patents
United States Patent and Trademark Office
P.O. Box 1450
Alexandria, VA 22313-1450
www.uspto.gov

FINNEGAN HENDERSON FARABOW
GARRET & DUNNER LLP
1300 I ST NW
WASHINGTON DC 20005

COPY MAILED

APR 0 4 2005

OFFICE OF PETITIONS

In re Application of :
Wie, et al. :
Application No. 10/618,427 : DECISION ON PETITION
Filed: July 10, 2003 :
Attorney Docket No. 07451 0002-03 :

This is a decision on the "PETITION UNDER 37 C.F.R. § 1.53(e)(2)", filed October 27, 2004, requesting that the above-identified application be accorded a filing date of July 10, 2003, with Figure 15F of the drawings as part of the original disclosure.

The petition is **DISMISSED**.

The application was filed on July 10, 2003. However, on September 2, 2004, the Office mailed a "Notice of Omitted Item(s) in a Nonprovisional Application", stating that the application had been accorded a filing date of July 10, 2003; however, Figure 15F described in the specification appeared to have been omitted.

In response, the present petition was filed. Petitioners admit that Figure 15F was absent from the papers filed with the Office on July 10, 2003. However, petitioners request that Figure 15F be incorporated by reference into the above-identified application.

Figures not present on the filing date cannot be considered a part of the original disclosure of the application. As Figure 15F was not present in the Office on July 10, 2003, the application can not be accorded the July 10, 2003 filing date with the drawing of Figure 15F as a part of the original disclosure.

Accordingly, the Notice mailed on September 2, 2004, was correct in stating that Figure 15F of the drawings appeared to have been omitted. Therefore, the requirement for the omitted figure of drawings was proper and will not be withdrawn.

However, a review of the application file reveals that the application transmittal letter included an incorporation by reference statement.

MPEP § 201.06(c) states that:

> . . . an applicant may incorporate by reference the prior application by including, in the application-as-filed, a statement that such specifically enumerated prior application or applications are "hereby incorporated herein by reference." The statement may appear in the specification or in the application transmittal letter. The inclusion of this incorporation by reference of the prior application(s) will permit an applicant to **amend** the continuing application to include any subject matter in such prior application(s), **without the need for a petition** (emphasis added).

Obviously, in view of the incorporation by reference of parent application no. 10/189,231, the drawing of Figure 15F is not new matter if it was a part of the disclosure of that application.

The $130 petition fee will not be refunded because the petition was not necessitated by any error on the part of the United States Patent and Trademark Office.

The application is being returned to Group Art Unit 2131 for consideration by the examiner of the petition and drawing figure filed October 27, 2004, as an amendment.

Telephone inquiries specific to this matter should be directed to the undersigned at 571-272-3207.

Cliff Congo
Petitions Attorney
Office of Petitions

UNITED STATES PATENT AND TRADEMARK OFFICE

Commissioner for Patents
United States Patent and Trademark Office
P.O. Box 1450
Alexandria, VA 22313-1450
www.uspto.gov

Chun-Pok Leung
TOWNSEND and TOWNSEND and CREW LLP
Two Embarcadero Center, 8th Floor
San Francisco, California 94111-3834

MAILED

APR 03 2006

Technology Center 2100

In re Application of:
Nobumitsu TAKAOKA et al
Application No. 10/618,433
Filed: July 10, 2003
For: COMPUTER MANAGEMENT SYSTEM AND MANAGEMENT PROGRAM

DECISION ON PETITION TO MAKE SPECIAL

This is a decision on the petition, originally filed on 23 August 2004 (resubmitted on 07 February 2005 and further resubmitted on 06 October 2005) under 37 C.F.R. §102(d) and M.P.E.P. § 708.02(VIII): Accelerated Examination, to make the above-identified application special.

The petition is **DISMISSED**.

M.P.E.P. § 708.02, Section VIII which sets out the prerequisites for a grantable petition for Accelerated Examination under 37 C.F.R. § 102(d) states in relevant part:

> A new application (one which has not received any examination by the examiner) may be granted special status provided that applicant (and this term includes applicant's attorney or agent) complies with each of the following items:
>
> (A) Submits a petition to make special accompanied by the fee set forth in 37 CFR § 1.17(h);
>
> (B) Presents all claims directed to a single invention, or if the Office determines that all the claims presented are not obviously directed to a single invention, will make an election without traverse as a prerequisite to the grant of special status;
>
> (C) Submits a statement(s) that a pre-examination search was made, listing the field of search by class and subclass, publication, Chemical Abstracts, foreign patents, etc. A search made by a foreign patent office satisfies this requirement;
>
> (D) Submits one copy each of the references deemed most closely related to the subject matter encompassed by the claims if said references are not already of record; and

(E) Submits a detailed discussion of the references, which discussion points out, with the particularity required by 37 CFR §§ 1.111 (b) and (c), how the claimed subject matter is patentable over the references.

In those instances where the request for this special status does not meet all the prerequisites set forth above, applicant will be notified and the defects in the request will be stated. The application will remain in the status of a new application awaiting action in its regular turn. In those instances where a request is defective in one or more respects, applicant will be given one opportunity to perfect the request in a renewed petition to make special. If perfected, the request will then be granted. If not perfected in the first renewed petition, any additional renewed petitions to make special may or may not be considered at the discretion of the Group Special Program Examiner.

Applicant's submission of 23 August 2004 fails to meet requirement (E) as set forth above. There is no detailed discussion of the references to the extent required by 37 CFR 1.111(b) and (c). In addition, the discussion does not sufficiently distinguish the patentable feature in the claimed subject matter relative to the prior art references. Applicant must bring out the specific feature that defines the claimed invention as set forth in the independent claims in order to properly discuss the same with relevant details from each of the references. Section (E) explicitly mandates that the "discussion points out, with the particularity required by 37 CFE 1.111 (b) and (c), how the claimed subject matter is patentable over the references." Applicant's petition, however, does not distinctly identify the claim component that distinguishes the claimed invention from the reference prior art.

Accordingly, the petition is **DISMISSED**. Petitioner is given one opportunity to perfect the petition. Any request for reconsideration must be filed within TWO MONTHS of the mail date of this decision.

Until the renewed petition is submitted, the application will be returned to the examiner's docket to await treatment on the merits in the normal order of examination.

Vincent N. Trans
Special Program Examiner
Technology Center 2100
Computer Architecture, Software, and
Information Security
571-272-3613

UNITED STATES PATENT AND TRADEMARK OFFICE

Commissioner for Patents
United States Patent and Trademark Office
P.O. Box 1450
Alexandria, VA 22313-1450
www.uspto.gov

CHRISTENSEN, O'CONNOR, JOHNSON, KINDNESS, PLLC
1420 FIFTH AVENUE
SUITE 2800
SEATTLE, WA 98101-2347

COPY MAILED

JUN 27 2005

OFFICE OF PETITIONS

In re Application of	:	
Bailey, Michael Antony	:	
Application No. 10/618,435	:	ON PETITION
Filed: July 10, 2003	:	
Attorney Docket No. BARK121462	:	

This is a decision on the petition under 37 C.F.R. § 1.137(b), filed June 15, 2005, to revive the above-identified application.

The petition is **DISMISSED**.

Any request for reconsideration must be submitted within TWO (2) MONTHS from the mail date of this decision. No further petition fee is required for the request. Extensions of time under 37 CFR 1.136(a) are permitted. The reconsideration request should include a cover letter entitled "Renewed Petition under 37 CFR 1.137(b)." This is **not** a final agency action within the meaning of 5 U.S.C. § 704.

This application became abandoned for failure to timely reply to the non-final Office action mailed October 13, 2004. No extensions of time under the provisions of 37 CFR 1.136(a) were timely obtained. Accordingly, this application became abandoned on January 14, 2005.

A grantable petition under 37 CFR 1.137(b) must be accompanied by:
(1) the required reply,[1]
(2) the petition fee,
(3) a statement that the entire delay in filing the required reply from the due date for the reply until the filing of a grantable petition pursuant to 37 CFR 1.137(b) was unintentional, and
(4) a terminal disclaimer and fee if the application was filed on or before June 8, 1995 or if the application is a design application.

Where there is a question as to whether either the abandonment or the delay in filing a petition under 37 CFR 1.137 was unintentional, the Commissioner may require additional information.[2]

---

[1] In a nonprovisional application abandoned for failure to prosecute, the required reply may be met by the filing of a continuing application. In an application or patent, abandoned or lapsed for failure to pay the issue fee or any portion thereof, the required reply must be the payment of the issue fee or any outstanding balance thereof.

[2] See MPEP 711.03(c)(III)(C) and (D).

The instant petition does not lack any of the above items. However, it appears that the actual petition was signed by the assignee, and therefore, does not comply with 37 CFR 3.73(b). 37 CFR 3.73(b) provides that: (1) when an assignee seeks to take action in a matter before the Office, the assignee must establish its ownership of the property to the satisfaction of the Commissioner; (2) ownership is established by submitting to the Office, in the Office file related to the matter in which action is sought to be taken, documentary evidence of a chain of title from the original owner to the assignee (*e.g.*, copy of an executed assignment submitted for recording) or by specifying (*e.g.*, reel and frame number) where such evidence is recorded in the Office; (3) the submission establishing ownership must be signed by a party authorized to act on behalf of the assignee; and (4) documents submitted to establish ownership may be required to be recorded as a condition to permitting the assignee to take action in a matter pending before the Office. A 37 CFR 3.73(b) statement is enclosed. Submission of the statement will revive the above-identified application.

An extension of time under 37 CFR 1.136 must be filed prior to the expiration of the maximum extendable period for reply. See In re Application of S., 8 USPQ2d 1630, 1631 (Comm'r Pats. 1988). Accordingly, since the $1020.00 extension of time fee submitted with the petition on June 15, 2005, was subsequent to the maximum extendable period for reply, this fee is unnecessary and will be credited to petitioner's deposit account as authorized.

Further correspondence with respect to this matter should be addressed as follows:

By mail: Mail Stop PETITIONS
Commissioner for Patents
Post Office Box 1450
Alexandria, VA 22313-1450

By hand: Customer Window located at:

U.S. Patent and Trademark Office
Customer Service Window Randolph Building
401 Dulany Street
Alexandria, VA 22314

By fax: (703) 872-9306
ATTN: Office of Petitions

Any questions concerning this matter may be directed to the undersigned at (571) 272-3206.

Liana Chase
Petitions Examiner
Office of Petitions
Office of the Deputy Commissioner
for Patent Examination Policy

Enclosure: Statement under 37 CFR 3.73(b)

UNITED STATES PATENT AND TRADEMARK OFFICE

Commissioner for Patents
United States Patent and Trademark Office
P.O. Box 1450
Alexandria, VA 22313-1450
www.uspto.gov

CHRISTENSEN, O'CONNOR, JOHNSON, KINDNESS, PLLC
1420 FIFTH AVENUE
SUITE 2800
SEATTLE WA 98101-2347

COPY MAILED
AUG 0 2 2005
OFFICE OF PETITIONS

In re Application of	:	
Bailey, Michael Antony	:	
Application No. 10/618,435	:	ON PETITION
Filed: July 10, 2003	:	
Attorney Docket No. BARK121462	:	

This is a decision on the renewed petition under 37 C.F.R. § 1.137(b), filed July 13, 2005, to revive the above-identified application.

The petition is **GRANTED.**

Petitioner has met the requirements to revive the above-identified application pursuant to 37 CFR 1.137(b).

This matter is being referred to Technology Center 2800 for further examination on the merits.

Telephone inquiries regarding this decision should be directed to the undersigned at (571) 272-3282.

Liana Chase
Petitions Examiner
Office of Petitions
Office of the Deputy Commissioner
for Patent Examination Policy

UNITED STATES PATENT AND TRADEMARK OFFICE

Commissioner for Patents
United States Patent and Trademark Office
P.O. Box 1450
Alexandria, VA 22313-1450
www.uspto.gov

CLIFFORD B. PERRY
132 N. EL CAMINO REAL, #347
ENCINITAS CA 92024-2801

COPY MAILED

JUN 15 2005

OFFICE OF PETITIONS

ON PETITION

In re Application of :
Bert L. Fransis :
Application No. 10/618,448 :
Filed: July 10, 2003 :
Attorney Docket No. RFM-10 US :

This is a notice regarding your request for acceptance of a fee deficiency submission under 37 CFR 1.28. On September 1, 1998, the Court of Appeals for the Federal Circuit held that 37 CFR 1.28(c) is the sole provision governing the time for correction of the erroneous payment of the issue fee as a small entity. **See DH Technology v. Synergystex International, Inc. 154 F.3d 1333, 47 USPQ2d 1865 (Fed. Cir. Sept. 1, 1998).**

The Office no longer investigates or rejects original or reissue applications under 37 CFR 1.56. **1098 Off. Gaz. Pat. Office 502 (January 3, 1989).** Therefore, nothing in this Notice is intended to imply that an investigation was done.

Your fee deficiency submission under 37 CFR 1.28 is hereby **ACCEPTED.**

This application no longer qualifies for small entity status. Accordingly, all future fees must be paid at the large entity rate.

Additionally, after careful review of the application file, it was noted that an issue fee transmittal was received in the USPTO on December 7, 2004.

In view thereof, the Notice of Abandonment mailed on January 31, 2005, was mailed in error and is hereby withdrawn.

Inquiries related to this communication should be directed to the undersigned at (571) 272-3208.

This matter is being referred to Patent Publication.

Karen Creasy

Karen Creasy
Petitions Examiner
Office of Petitions
Office of the Deputy Commissioner
for Patent Examination Policy

cc:

CLIFFORD B. PERRY
449 SANTA FE DRIVE #312
ENCINITAS, CA 92024

UNITED STATES PATENT AND TRADEMARK OFFICE

Commissioner for Patents
United States Patent and Trademark Office
P.O. Box 1450
Alexandria, VA 22313-1450
www.uspto.gov

SQUIRE SANDERS & DEMPSEY LLP
TWO RENAISSANCE SQUARE
40 NORTH CENTRAL AVENUE
SUITE 2700
PHOENIX, AZ 85004-4498

MAILED

JAN 30 2009

OFFICE OF PETITIONS

In re Application of	:	
John C. Opie, et al.	:	
Application No. 10/618,456	:	DECISION ON PETITION
Filed: July 11, 2003	:	TO WITHDRAW
Attorney Docket No. 32303.00003	:	FROM RECORD
	:	

This is a decision on the Request to Withdraw as attorney or agent of record under 37 C.F.R. § 1.36(b), filed November 4, 2008.

The request is **APPROVED**.

A grantable request to withdraw as attorney/agent of record must be signed by every attorney/agent seeking to withdraw or contain a clear indication that one attorney is signing on behalf of another/others.

The request was signed by Alex Starkovich on behalf of all attorneys of record who are associated with customer No. 23619. All attorneys/agents associated with the Customer Number 23619 have been withdrawn. Applicant is reminded that there is no attorney of record at this time.

All future correspondence will be directed to the first named inventor John C. Opie at the address indicated below.

In order to request or take action in a patent matter, the assignee must establish its ownership of the patent to the satisfaction of the Director. In this regard, a Statement under 37 CFR 3.73(b) must have either: (i) documentary evidence of a chain of title from the original owner to the assignee (*e.g.*, copy of an executed assignment), and a statement affirming that the documentary evidence of the chain of title from the original owner to the assignee was or concurrently is being submitted for recordation pursuant to § 3.11; or (ii) a statement specifying where documentary evidence of a chain of title from the original owner to the assignee is recorded in the assignment records of the Office (*e.g.*, reel and frame number).

There is an outstanding Office action mailed November 12, 2008 that requires a reply from the applicant.

Telephone inquiries concerning this decision should be directed to undersigned at 571-272-1642.

/AMW/
April M. Wise
Petitions Examiner
Office of Petitions

cc: JOHN C. OPIE
8310 N. VIA DE LAGO
SCOTTSDALE, AZ 85258

UNITED STATES PATENT AND TRADEMARK OFFICE

Commissioner for Patents
United States Patent and Trademark Office
P.O. Box 1450
Alexandria, VA 22313-1450
www.uspto.gov

KNOBBE MARTENS OLSON & BEAR LLP
2040 MAIN STREET
FOURTEENTH FLOOR
IRVINE, CA 92614

COPY MAILED

MAR 19 2007

OFFICE OF PETITIONS

In re Application of :
Peter Muys et al :
Application No. 10/618,464 : ON PETITION
Filed: July 11, 2003 :
Attorney Docket No. DECLE60.001AUS :

This is a decision on the petition under the unintentional provisions of 37 CFR 1.137(b), filed March 21, 2006, to revive the above-identified application.

The petition is **DISMISSED.**

Any request for reconsideration of this decision must be submitted within TWO (2) MONTHS from the mail date of this decision. Extensions of time under 37 CFR 1.136(a) are permitted. The reconsideration request should include a cover letter entitled "Renewed Petition under 37 CFR 1.137(b)." This is **not** a final agency action within the meaning of 5 U.S.C. § 704.

The application became abandoned for failure to reply in a timely manner to the Office action under Ex parte Quayle, 1935 Dec. Comm'r Pat. 11 (1935), mailed July 27, 2004, which set a shortened statutory period for reply of two (2) months. No timely extensions of time were obtained under the provisions of 37 CFR 1.136(a). Accordingly, the application became abandoned on September 28, 2004.

A grantable petition under 37 CFR 1.137(b) must be accompanied by: (1) the required reply, unless previously filed; (2) the petition fee as set forth in 37 CFR 1.17(m); (3) a statement that the entire delay in filing the required reply from the due date for the reply until the filing of a grantable petition pursuant to 37 CFR 1.137(b) was unintentional; and (4) any terminal disclaimer (and fee as set forth in 37 CFR 1.20(d)) required by 37 CFR 1.137(d). Where there is a question as to whether either the abandonment or the delay in filing a petition under 37 CFR 1.137 was unintentional, the Director may require additional information. *See* MPEP 711.03(c)(II)(C). The instant petition fails to satisfy item (3).

The petition states that, in May 2005, this application was acquired from VDM, Laser Optics, N.V. (hereafter VDM) by Lambda Research Optics (hereafter Lambda). The events, which led to the unintentional abandonment of this application, are stated as follows:

1. On December 28, 2004, VDM's U.S. attorney received an instruction from VDM's foreign attorney (hereafter De Clereq), to allow the application to "lapse by not replying to the outstanding Office action." Here, reference is made to an attachment 1, which is not found with the petition. Because of the instruction received from VDM's foreign attorney, the U.S. attorney did not file a reply.
2. Despite the instruction from VDM's foreign attorney to not reply to the outstanding Office action, De Clereq has no record of this communication from VDM. Here, a reference is made to attachment 2, also not found of record.
3. Mr. Peter Muys, the CEO at the time of VDM was unaware of and did not intend for such direction to De Clereq to be given. A reference here is made to an attachment 3, also not found in the record.
4. A copy of the Notice of Abandonment of June 9, 2005 was mailed to De Clereq on June 27, 2005. Thereafter, Lambda, the current assignee, was notified of the abandoned status of the application on September 29, 2005 and initiated steps to revive this application.
5. From October 20, 2005 to the present, Lambda's current attorney, "during the normal course of managing his docket, has researched the facts related to, prepared, and filed this petition."

There are three periods to be considered during the evaluation of a petition under 37 CFR 1.137(b):

(1) the delay in reply that originally resulted in the abandonment;

(2) the delay in filing an initial petition pursuant to 37 CFR 1.137(b) to revive the application; and

(3) the delay in filing a grantable petition pursuant to 37 CFR 1.137(b) to revive the application.

Currently, the delay has not been shown to the satisfaction of the Director to be unintentional for periods (1) and (2).

<u>As to Period (1):</u>

The patent statute at 35 U.S.C. § 41(a)(7) authorizes the Director to revive an "unintentionally abandoned application." The legislative history of Public Law 97-247 reveals that the purpose of 35 U.S.C.

§ 41(a)(7) is to permit the Office to have more discretion than in 35 U.S.C. §§ 133 or 151 to revive abandoned applications in appropriate circumstances, but places a limit on this discretion, stating that "[u]nder this section a petition accompanied by either a fee of $500 or a fee of $50 **would not be granted where the abandonment** or the failure to pay the fee for issuing the patent **was intentional** as opposed to being unintentional or unavoidable." [emphasis added]. See H.R. Rep. No. 542, 97th Cong., 2d Sess. 6-7 (1982), *reprinted in* 1982 U.S.C.C.A.N. 770-71. The revival of an intentionally abandoned application is antithetical to the meaning and intent of the statute and regulation.

35 U.S.C. § 41(a)(7) authorizes the Commissioner to accept a petition "for the revival of an unintentionally abandoned application for a patent." As amended December 1, 1997, 37 CFR 1.137(b)(3) provides that a petition under 37 CFR 1.137(b) must be accompanied by a statement that the delay was unintentional, but provides that "[t]he Commissioner may require additional information where there is a question whether the delay was unintentional." Where, as here, there is a question whether the initial delay was unintentional, the petitioner must meet the burden of establishing that the delay was unintentional within the meaning of 35 U.S.C. § 41(a)(7) and 37 CFR 1.137(b). See In re Application of G, 11 USPQ2d 1378, 1380 (Comm'r Pats. 1989); 37 CFR 1.137(b). Petitioner should note that the issue is not whether some of the delay was unintentional by any party; rather, the issue is whether the entire delay has been shown to the satisfaction of the Director to be unintentional.

The question under 37 CFR 1.137(b) for period (1) is whether the delay on the part of the party having the right or authority to reply to avoid abandonment (or not reply) was unintentional. Accordingly, any renewed petition must clearly identify the party having the right to reply to avoid abandonment on September 27, 2004 or within the extendable period to January 27, 2005. That party, in turn, must explain what effort(s) was made to further reply to the outstanding Office action and further, why no reply was filed. If no effort was made to further reply, then that party must explain why the delay in this application does not result from a deliberate course of action (or inaction).

The showing of record is that the then assignee's U.S. attorney received instruction from the assignee's foreign attorney to not reply to the outstanding Office action. Current assignee, Lambda, is now seeking to revive this application. However, when the issue of revival is addressed, the focus must be on the rights of the parties as of the time of abandonment. See Kim v. Quigg, 718 F.Supp. 1280, 1284, 12 USPQ2d 1604, 1607 (E.D. Va. 1989). The record shows that the assignee's foreign attorney deliberately told the U.S. attorney to withhold filing a reply to the outstanding Office action. As a result of this deliberate action, this application became abandoned. A delay

caused by the deliberate decision not to take appropriate action within a statutorily prescribed period does not constitute an unintentional delay within the meaning of 35 U.S.C. § 41. In re Application of G, 11 USPQ2d 1378, 1380 (Comm'r Pat. 1989). Such intentional action or inaction precludes a finding of unintentional delay. In re Maldague, 10 USPQ2d 1477, 1478 (Comm'r Pat. 1988); Lawman Armor v. Simon, 2005 U.S. Dist. LEXIS 10843, 74 USPQ2d 1633 (DC EMich 2005); Field Hybrids, LLC v. Toyota Motor Corp., 2005 U.S. Dist. LEXIS 1159 (D. Minn Jan. 27, 2005); Lumenyte Int'l Corp. v. Cable Lite Corp., Nos. 96-1011, 96-1077, 1996 U.S. App. LEXIS 16400, 1996 WL 383927 (Fed. Cir. July 9, 1996) (unpublished). Moreover, that delay is binding upon successors in title to VDM. See, Winkler v. Ladd, 221 F.Supp. 550, 552, 138 USPQ 666, 667 (D.D.C. 1963). Petitioner, as an asserted successor in title, remains bound by the decisions, actions, or inactions, of VDM and its attorneys, including the decisions, actions, or inactions, which resulted in the lack of a timely reply to the outstanding Office action in this application. Id.; Kim supra.

The record currently fails to demonstrate that VDM, the owner of this application at the time the reply to the outstanding Office action of July 24, 2004 was due, intended to proceed with prosecution of this application. VDM, as the owner of the entire interest at the time the reply was due, was free to deal with this application as VDM willed. See Garfield v. Western Electric Co., 298 F.659 (S.D.N.Y. 1924). It follows that it is immaterial to the delay during the time the reply was due that petitioner may have been unaware of, or would not have acquiesced to, VDM's actions or inactions. Kim, supra. That petitioner, upon its acquisition of its rights in the patent, may have acted with dispatch, is immaterial to, and does not overcome, the delay attributable to VDM. Id.

Copies of any correspondence relating to the filing, or to not filing a further reply to the outstanding Office action are required from the responsible person(s), as well as statements from all persons having firsthand knowledge of the circumstances surrounding the lack of a reply to the outstanding Office action. As the courts have made clear, it is pointless for the USPTO to revive an abandoned application without an adequate showing that the delay did not result from a deliberate course of action. See Lawman Armor v. Simon, 2005 U.S. Dist. LEXIS 10843, 74 USPQ2d 1633 (DC EMich 2005); Field Hybrids, LLC v. Toyota Motor Corp., 2005 U.S. Dist. LEXIS 1159 (D. Minn Jan. 27, 2005); Lumenyte Int'l Corp. v. Cable Lite Corp., Nos. 96-1011, 96-1077, 1996 U.S. App. LEXIS 16400, 1996 WL 383927 (Fed. Cir. July 9, 1996) (unpublished) (patents held unenforceable due to a finding of inequitable conduct in submitting an inappropriate statement that the abandonment was unintentional).

As to Period (2):

Likewise, where the applicant deliberately chooses not to seek or persist in seeking the revival of an abandoned application, or where the applicant deliberately chooses to delay seeking the revival of an abandoned application, the resulting delay in seeking revival of the abandoned application cannot be considered as "unintentional" within the meaning of 37 CFR 1.137(b). See MPEP 711.03(c).

The language of both 35 U.S.C. § 41(a)(7) and 37 CFR 1.137(b) are clear and unambiguous, and furthermore, without qualification. That is, the delay in filing the reply during prosecution, as well as in filing the petition seeking revival, must have been, without qualification, "unintentional" for the reply to now be accepted on petition. The Office requires that the entire delay be at least unintentional as a prerequisite to revival of an abandoned application to prevent abuse and injury to the public. See H.R. Rep. No. 542, 97th Cong., 2d Sess. 7 (1982), reprinted in 1982 U.S.C.C.A.N. 771 ("[i]n order to prevent abuse and injury to the public the Commissioner . . . could require applicants to act promptly after becoming aware of the abandonment"). The December 1997 change to 37 CFR 1.137 did not create any new right to overcome an intentional delay in seeking revival, or in renewing an attempt at seeking revival, of an abandoned application. See Changes to Patent Practice and Procedure; Final Rule Notice, 62 Fed. Reg. 53131, 53160 (October 10, 1997), 1203 Off. Gaz. Pat. Office 63, 87 (October 21, 1997). The record currently fails to demonstrate that VDM, as the owner of this application, sought prompt revival of this application upon learning of the alleged mistaken abandonment of this application. As noted above, that petitioner, upon its acquisition of its rights in the patent, may have acted with dispatch, is immaterial to, and does not overcome, the delay attributable to VDM. As the courts have since made clear, a delay in seeking revival, as here, requires a petitioner's detailed explanation seeking to excuse the delay as opposed to USPTO acceptance of a general allegation of unintentional delay. See Lawman Armor v. Simon, 2005 U.S. Dist. LEXIS 10843, 74 USPQ2d 1633, at 1637-8 (DC EMich 2005); Field Hybrids, LLC v. Toyota Motor Corp., 2005 U.S. Dist. LEXIS 1159 (D. Minn Jan. 27, 2005) at *21-*23. Accordingly, statements are required from any and all persons having firsthand knowledge of the circumstances surrounding the delay, after the abandonment date, in seeking revival.

In addition, the fact that this application was deliberately abandoned is demonstrated by the examiner's statement in the Notice of Abandonment mailed on June 9, 2005, which states: "Verified application was intentionally abandoned in 6/8/2005 telecon with applicant's representative, Mr. John Carson."

As the record fails to demonstrate that "the entire delay in filing the required reply from the due date for the reply until the filing of

a grantable petition pursuant to 37 CFR 1.137(b) was unintentional," the petition to revive must be dismissed.

Further correspondence with respect to this matter should be addressed as follows:

By Mail: Mail Stop PETITION
Commissioner for Patents
P. O. Box 1450
Alexandria, VA 22313-1450

By hand: U. S. Patent and Trademark Office
Customer Service Window, Mail Stop Petitions
Randolph Building
401 Dulany Street
Alexandria, VA 22314

The centralized facsimile number is **(571) 273-8300.**

Alternatively, any request for reconsideration of this decision may be filed by the Electronic Filing System (EFS).

Telephone inquiries concerning this decision should be directed to the undersigned at (571) 272-3218.

Frances Hicks
Petitions Examiner
Office of Petitions

UNITED STATES PATENT AND TRADEMARK OFFICE

Commissioner for Patents
United States Patent and Trademark Office
P.O. Box 1450
Alexandria, VA 22313-1450
www.uspto.gov

KNOBBE MARTENS OLSON & BEAR LLP
2040 MAIN STREET
FOURTEENTH FLOOR
IRVINE CA 92614

COPY MAILED

JUL 18 2007

OFFICE OF PETITIONS

In re Application of
Muys et al.
Application No. 10/618,464
Filed: July 11, 2003
For: LENS WITH OPTIMIZED HEAT TRANSFER PROPERTIES

DECISION ON PETITION

This is a decision on the renewed petition under 37 CFR 1.137(b) filed March 21, 2007, requesting revival of the above-identified application.

The petition is dismissed.

Any request for reconsideration of this decision must be submitted within TWO (2) MONTHS from the mail date of this decision. Extensions of time (and fee) under 37 CFR 1.136(a) are permitted. The reconsideration request should include a cover letter entitled "Renewed Petition under 37 CFR 1.137(b)."

This application became abandoned for failure to reply to the Ex Parte Quayle action of July 27, 2004, which set an extendable shortened statutory period for reply of two (2) months. As no extensions of time were obtained under the provisions of 37 CFR 1.136(a), and no reply was filed, this application became abandoned at midnight on September 27, 2004. A Notice of Abandonment was mailed June 9, 2005.

WITH RESPECT TO THE PETITION TO REVIVE:

Petitioner, Lambda Research Optics (Lambda), the May 2005 successor in title to VDM Laser Optics N.V. (VDM) asserts the delay in prosecution was unintentional in that while VDM's foreign counsel, Mr. De Clercq, instructed former U.S. counsel to withhold a reply, Mr. Muys, as head of VDM, was unaware of and did not intend that this instruction given.

A grantable petition to revive an abandoned application under 37 CFR 1.137(b) must be accompanied by: (**1**) the required reply (unless previously filed), which may met by the filing of a continuing application in a nonprovisional application abandoned for failure to prosecute, but must be the payment of the issue fee or any outstanding balance thereof in an application or patent, abandoned or lapsed for failure to pay the issue fee or any portion thereof; (**2**) the petition fee required by 37 CFR 1.17(m); (**3**) an adequate statement that the entire delay in

filing the required reply from the due date for the reply until the filing of a grantable petition pursuant to 37 CFR 1.137(b) was unintentional; and (**4**) in some instances, a terminal disclaimer (and fee as set forth in 37 CFR 1.20(d)). This petition lacks item (3) above.

There are three periods to be considered during the evaluation of a petition under 37 CFR 1.137(b):

(1) the delay in reply that originally resulted in the abandonment;

(2) the delay in filing an initial petition pursuant to 37 CFR 1.137(b) to revive the application; and

(3) the delay in filing a grantable petition pursuant to 37 CFR 1.137(b) to revive the application.

Currently, the delay has not been shown to the satisfaction of the Director to be unintentional for periods (1), (2).

As to Period (1):

The patent statute at 35 U.S.C. § 41(a)(7) authorizes the Director to revive an "unintentionally abandoned application." The legislative history of Public Law 97-247 reveals that the purpose of 35 U.S.C. § 41(a)(7) is to permit the Office to have more discretion than in 35 U.S.C. §§ 133 or 151 to revive abandoned applications in appropriate circumstances, but places a limit on this discretion, stating that "[u]nder this section a petition accompanied by either a fee of $500 or a fee of $50 **would not be granted where the abandonment** or the failure to pay the fee for issuing the patent **was intentional** as opposed to being unintentional or unavoidable." [emphasis added]. See H.R. Rep. No. 542, 97th Cong., 2d Sess. 6-7 (1982), reprinted in 1982 U.S.C.C.A.N. 770-71. The revival of an intentionally abandoned application is antithetical to the meaning and intent of the statute and regulation.

35 U.S.C. § 41(a)(7) authorizes the Commissioner to accept a petition "for the revival of an unintentionally abandoned application for a patent." As amended December 1, 1997, 37 CFR 1.137(b)(3) provides that a petition under 37 CFR 1.137(b) must be accompanied by a statement that the delay was unintentional, but provides that "[t]he Commissioner may require additional information where there is a question whether the delay was unintentional." Where, as here there is a question whether the initial delay was unintentional, the petitioner must meet the burden of establishing that the delay was unintentional within the meaning of 35 U.S.C. § 41(a)(7) and 37 CFR 1.137(b). See In re Application of G, 11 USPQ2d 1378, 1380 (Comm'r Pats. 1989); 37 CFR 1.137(b). Here in view of the inordinate delay in resuming prosecution, as well as the admission of U.S. counsel as memorialized in the Notice of Abandonment that this case was intentionally abandoned there is a question whether the entire delay was unintentional on the part of the party(s) having the right to reply to the outstanding Office action, as well as on the part of the intervening parties having ownership or control of this application. Petitioner should note that the issue is not whether some of the delay was unintentional by any party;

rather, the issue is whether the entire delay has been shown to the satisfaction of the Director to be unintentional.

The question under 37 CFR 1.137(b) for period (1) is whether the delay on the part of the party having the right or authority to reply to avoid abandonment (or not reply) was unintentional. When the issue of revival is addressed, the focus must be on the rights of the parties as of the time of abandonment. See Kim v. Quigg, 781 F. Supp. 1280, 1284, 12 USPQ2d 1604, 1607 (E.D. Va 1989). While Mr. Muys (CEO of VDM) asserts that he did not want De Clercq to order the abandonment, Mr. Muys is silent as to whether he or anyone else at VDM was aware of the outstanding Quayle action, and its deadline for reply. That omission requires clarification. Similarly for Mr. Vendamme, who is also represented as a CEO of VDM.

Accordingly, any renewed petition must also clearly identify the party(s) having the right to reply to avoid abandonment on September 27, 2004. That party(s), in turn must explain what effort(s) was made to reply to the outstanding Office action and further, why no reply was filed. If no effort was made to reply, then that party must explain why the delay in this application does not result from a deliberate course of action (or inaction).

Likewise, as registered practitioners from Knobbe Martens Olson & Bear ("KMOB") were counsel of record at the date of abandonment, KMOB should explain why this application became abandoned while it was under their control and what efforts KMOB made to reply of itself and with whom this matter was discussed outside of KMOB. Assuming, *arguendo*, that in accepting the instructions of De Clercq to the exclusion of seeking or accepting the input of the named inventors (Muys and Vendamme), or other persons at VDM[1], prior to intentionally withholding a reply to this application, KMOB overlooked any duty owed the inventors (or VDM) in this matter, then petitioner is reminded that the USPTO must rely on the actions or inactions of duly authorized and voluntarily chosen representatives of the applicant. Link v. Wabash, 370 U.S. 626, 633-34; Irwin v. Department of Veterans Affairs, 498 U.S. 89, 93; Huston v. Ladner, 973 F.2d 1564, 1567, 23 USPQ2d 1910, 1913 (Fed. Cir. 1992); see also Haines v. Quigg, 673 F. Supp. 314, 317, 5 USPQ2d 1130, 1132 (D.N. Ind. 1987). Applicant (or, here, VDM) is likewise bound by the actions or inactions of his foreign counsel. See Gemveto Jewelry Co. v. Lambert Bros., Inc., 542 F. Supp. 933 at 943, 216 USPQ 976, at 985. (S.D.N.Y. 1982). It is also noted that the USPTO is not the proper forum for resolving a dispute between an applicant and his duly appointed representative(s) with respect to a failure to take a timely action before the USPTO. See Ray v. Lehman, 55 F.3d 606, 610, 34 USPQ2d 1786, 1789 (Fed. Cir. 1989).

Copies of any correspondence and internal and external memoranda relating to the filing, or to not filing a reply to the outstanding Quayle action are required from responsible person(s) at VDM, Mr. De Clercq and his firm, counsel at KMOB, and whoever else was involved with this

---

[1]Inspection of the record of this file reveals that on filing the oath on December 11, 2003, Muys and Vendamme, as officers of VDM, had VDM intervene within the meaning of MPEP 324 and 37 CFR 3.73(b) to directly appoint the power of attorney to KMOB. See document entitled "Establishment of Right of Assignee to Take Action and Revocation and Power of Attorney" filed December 11, 2003.

application at the time of abandonment i.e., September 27, 2004. If VDM was unaware of the Quayle action or the abandonment, then VDM is required to list any steps diligently taken to ascertain the status and condition of this application. VDM must specifically indicate as to how the delay in discovering the Quayle action or abandoned status of this application occurred despite the exercise of due care or diligence on VDM's part. If VDM took no action with respect to either replying, ascertaining application status, or in seeking revival, VDM must so state.

Statements are required from any and all persons having firsthand knowledge of the circumstances surrounding the lack of a reply to the outstanding Office action. As the courts have made clear, it is pointless for the USPTO to revive a long abandoned--much less an apparently intentionally abandoned-- application without an adequate showing that the delay did not result from a deliberate course of action. See Lawman Armor v. Simon, 2005 U.S. Dist. LEXIS 10843, 74 USPQ2d 1633 (DC EMich 2005); Field Hybrids, LLC v. Toyota Motor Corp., 2005 U.S. Dist. LEXIS 1159 (D. Minn Jan. 27, 2005)(delay not unintentional where applicant and his counsel were aware of the deadline for reply to the outstanding Office action); New York University v. Autodesk, 466 F. Supp.2d 563, 2006 U.S. Dist. LEXIS 93105, (S.D.N.Y. 2006)(same); Lumenyte Int'l Corp. v. Cable Lite Corp., Nos. 96-1011, 96-1077, 1996 U.S. App. LEXIS 16400, 1996 WL 383927 (Fed. Cir. July 9, 1996)(unpublished)(patent held unenforceable due to a finding of inequitable conduct in submitting an inappropriate statement that the abandonment was unintentional); Aristocrat Technologies v. International Game Technology, 2007 U.S. Dist. LEXIS 42854 (N.D. CA 2007)(USPTO misapplication of the standards of revival overturned causing patent invalidation)

As to Period (2):

Likewise, where the applicant deliberately chooses not to seek or persist in seeking the revival of an abandoned application, or where the applicant deliberately chooses to delay seeking the revival of an abandoned application, the resulting delay in seeking revival of the abandoned application cannot be considered as "unintentional" within the meaning of 37 CFR 1.137(b). See MPEP 711.03(c).

The language of both 35 USC 41(a)(7) and 37 CFR 1.137(b) are clear and unambiguous, and furthermore, without qualification. That is, the delay in filing the reply during prosecution, as well as in filing the petition seeking revival, must have been, without qualification, "unintentional" for the reply to now be accepted on petition. The Office requires that the entire delay be at least unintentional as a prerequisite to revival of an abandoned application to prevent abuse and injury to the public. See H.R. Rep. No. 542, 97th Cong., 2d Sess. 7 (1982), reprinted in 1982 U.S.C.C.A.N. 771 ("[i]n order to prevent abuse and injury to the public the Commissioner . . . could require applicants to act promptly after becoming aware of the abandonment"). The December 1997 change to 37 CFR 1.137 did not create any new right to overcome an intentional delay in seeking revival, or in renewing an attempt at seeking revival, of an abandoned application. See Changes to Patent Practice and Procedure; Final Rule Notice, 62 Fed. Reg. 53131, 53160 (October 10, 1997), 1203 Off. Gaz. Pat. Office 63, 87 (October 21, 1997), which clearly stated clear that any protracted delay (here, 2 years) could trigger, as here, a request for additional information. As the courts have since made clear, a protracted delay in seeking revival, as here, requires a petitioner's detailed explanation seeking to excuse the delay as opposed to USPTO acceptance of a general allegation of unintentional delay. See Lawman

Armor v. Simon, 2005 U.S. Dist. LEXIS 10843, 74 USPQ2d 1633, at 1637-8 (DC EMich 2005); Field Hybrids, LLC v. Toyota Motor Corp., 2005 U.S. Dist. LEXIS 1159 (D. Minn Jan. 27, 2005) at *21-*23. Statements are required from any and all persons then at KMOB, VDM and the responsible person(s) having firsthand knowledge of the circumstances surrounding the protracted delay, after the abandonment date, in seeking revival. Any party who was an owner, assignee or trustee (apparently Fernand de Vliegher), in the period from September 27, 2004 until , through February 5, 2007, is required to submit a statement as to the diligence in, or delay on, their part in seeking revival or even investigating the status of this application during each respective period of ownership or control.

Further, petitioner, as a putative successor in title to the currently unnamed party(s) having the right or authority to reply *vel non* is bound by any intentional delay arising from that party, as well as from any intervening parties. See Winkler v. Ladd, 221 F.Supp 550, 552, 138 USPQ 666, 668 (D.D.C. 1963); Kim v. Quigg, supra. That petitioner may have acted with dispatch after obtaining the rights to this abandoned application is immaterial to, and does not overcome, an intentional abandonment and/or any other delay attributable to that party, or intervening parties, such as *e.g.*, the bankruptcy trustee. Kim, supra; Winkler, supra. Accordingly, the trustee in bankruptcy is required to state when and the manner in which he became aware of the abandonment of this application, and what steps he undertook to revive this application, or event to ascertain the status of this application. Copies of any correspondence, memoranda from the trustee, or between the trustee and any other party involving this application regarding its status, value to the estate, etc. are required. If the trustee was unaware of the abandoned status, then the trustee is required to list any steps diligently taken to ascertain the status and condition of this asset during the dates this asset was under his control. He must specifically indicate as to how the delay in discovering the abandoned status of this application occurred despite the exercise of due care or diligence on his part. If the trustee took no action with respect to either ascertaining its status or in seeking revival, he must so state.

Any renewed petition may be addressed as follows:

By mail: Mail Stop PETITIONS
Commissioner for Patents
Post Office Box 1450
Alexandria, VA 22313-1450

By hand: Customer Service Window
Randolph Building 401 Dulany Street
Alexandria, VA 22314:

By fax: (571) 273-8300
ATTN: Office of Petitions

Inquiries related to this decision may be made to the undersigned at (571) 272-3217.

Brian Hearn

Brian Hearn
Petitions Examiner
Office of Petitions

Pet. Dec.

OIPE JC180
MAR 0 3 2004
PATENT & TRADEMARK OFFICE

IN THE UNITED STATES PATENT AND TRADEMARK OFFICE

Application No.:	10/618,470
Applicant:	George LUTICH
Filed:	July 11, 2003
Art Unit:	1724
Examiner:	unknown
Title:	FILTER ASSEMBLY FOR SPRAYERS
Docket No.:	02059562
Customer No.:	26565

Approved
JMStone
Jacqueline M. Stone, Director
Technology Center 1700
3/29/05

Commissioner for Patents
P.O. Box 1450
Alexandria, VA 22313-1450
Attention: Director, Group 1724

REQUEST FOR WITHDRAWAL AS ATTORNEY (37 C.F.R. § 10.40(c))

REQUEST FOR PERMISSION TO WITHDRAW

1. I, an attorney signing below, respectfully request permission to withdraw from all further responsibility in this case, in accordance with 37 C.F.R. § 1.36.

(Check the following item, if appropriate)

☐ Because the amendment referred to in item 4A(iii) below is a continuing application signed only by an attorney named below under 37 C.F.R. § 1.60(b) or 37 C.F.R.§ 1.62(c), this withdrawal request is also for such continuing application.

LAST KNOWN ADDRESS OF CLIENT

2. The last known mailing address of the inventor(s) or assignee of the entire interest is:

Mr. George LUTICH
PARAGON WATER SYSTEMS, INC.
14001 63rd Way
Clearwater, Florida 33760

Pet. Dec.

BASIS FOR WITHDRAWAL REQUEST

3. The basis for the request for withdrawal is 37 C.F.R. 10.40(c)(1)(vi).
Explanation (including brief description of exhibits, if any)

The client has failed to pay one or more bills rendered by the practitioner for an unreasonable period of time or has failed to honor an agreement to pay a retainer in advance of the performance of legal services.

ALLOWANCE OF TIME FOR CLIENT TO ACT

4. Status of this Application

A. Response due *(if any)*

(i) ☒ There is no outstanding term for response.
(ii) ☐ There is an outstanding term for response that is set to expire on
The above term is extendible under 37 C.F.R. § 1.136(a), until
_____
and the fees for such extension ☐ are ☐ are not being submitted herewith.
(iii) ☐ Also, submitted herewith, is a response to the outstanding Official Action.

B. Time Left for Response

Therefore, the amount of time for response, including extension under 37 C.F.R. § 1.136(a) is:
☐ at least _____
☒ cannot be calculated because this case is/will now be awaiting action by the PTO.

NOTIFICATION OF CLIENT

5. In accordance with 37 C.F.R. § 10.40(a), a copy of this request, including any attachments, is being sent to the client. A copy of the letter to the client is attached.

NUMBER OF COPIES OF REQUEST

6. This request is enclosed in triplicate.
(To expedite the handling of request for permission to withdraw as attorney under 37 C.F.R. § 1.36, submit the request in triplicate.)

Pet. Dec.

7. Related Applications for Which Withdrawal is Requested

Withdrawal also is (has been) requested in the following related application(s) of the
☒ inventor ☐ assignee

09/781,865 filed February 12, 2001

SIGNATURE(S) OF WITHDRAWING ATTORNEY(S)

8. Signature(s) of the attorney(s) withdrawing (or signature of an authorized attorney on behalf of an attorney withdrawing)

Joseph A. Mahoney, Reg. No. 38,956

Date: March 3, 2004

MAYER, BROWN, ROWE & MAW LLP
P.O. Box 2828
Chicago, IL 60690-2828
Telephone: (312) 701-8979
Facsimile: (312) 706-9000

UNITED STATES PATENT AND TRADEMARK OFFICE

Commissioner for Patents
United States Patent and Trademark Office
P.O. Box 1450
Alexandria, VA 22313-1450
www.uspto.gov

INTEL/BLAKELY
1279 OAKMEAD PARKWAY
SUNNYVALE CA 94085-4040

COPY MAILED

JAN 2 9 2008

OFFICE OF PETITIONS

In re Application of :
Arvind KUMAR :
Application No. 10/618,480 :
Filed: July 11, 2003 :
Attorney Docket No. 42P16125 :

ON PETITION

This is a decision on the petition under 37 CFR 1.137(b), filed December 28, 2007, to revive the above-identified application.

The petition is **GRANTED**.

The above-identified application became abandoned for failure to reply in a timely manner to the non-final Office action mailed March 9, 2007, which set a shortened statutory period for reply of three (3) months. No extensions of time under the provisions of 37 CFR 1.136(a) were obtained. Accordingly, the above-identified application became abandoned on June 10, 2007.

The petition satisfies the conditions for revival pursuant to the provisions of 37 CFR 1.137(b) in that (1) the reply in the form of an amendment; (2) the petition fee of $1540; and (3) the required statement of unintentional delay have been received. Accordingly, the reply to the non-final Office action of March 9, 2007 is accepted as having been unintentionally delayed.

Telephone inquiries concerning this decision should be directed to Quyen Leung at (571) 272-6051 or in her absence, the undersigned at (571) 272-7099.

The application file is being referred to Technology Center AU 2155 for appropriate action on the concurrently filed amendment.

David A. Bucci
Petitions Examiner
Office of Petitions

UNITED STATES PATENT AND TRADEMARK OFFICE

Commissioner for Patents
United States Patent and Trademark Office
P.O. Box 1450
Alexandria, VA 22313-1450
www.uspto.gov

FLIESLER MEYER LLP
650 CALIFORNIA STREET
14TH FLOOR
SAN FRANCISCO, CA 94108

COPY MAILED
DEC 29 2006
OFFICE OF PETITIONS

In re Application of	:
James Owen et al	:
Application No. 10/618,513	: DECISION GRANTING PETITION
Filed: July 11, 2003	: UNDER 37 CFR 1.313(c)(2)
Attorney Docket No. BEAS-01360US1	:

This is a decision on the petition, filed December 28, 2006, under 37 CFR 1.313(c)(2) to withdraw the above-identified application from issue after payment of the issue fee.

The petition is **GRANTED**.

The above-identified application is withdrawn from issue for consideration of a submission under 37 CFR 1.114 (request for continued examination). See 37 CFR 1.313(c)(2).

Petitioner is advised that the issue fee paid on December 20, 2005 in the above-identified application cannot be refunded. If, however, the above-identified application is again allowed, petitioner may request that it be applied towards the issue fee required by the new Notice of Allowance.[1]

Telephone inquiries should be directed to the undersigned at (571) 272-3218.

This matter is being referred to Technology Center AU 2136 for processing of the request for continued examination under 37 CFR 1.114 and for consideration of the Information Disclosure Statement.

Frances Hicks
Petitions Examiner
Office of Petitions

C:\Documents and Settings\FHicks\My Documents\470\Dec10\618513.wpd

---

[1] *The request to apply the issue fee to the new Notice may be satisfied by completing and returning the new Part B – Fee(s) Transmittal Form (along with any balance due at the time of submission). Petitioner is advised that the Issue Fee Transmittal Form **must** be completed and timely submitted to avoid abandonment.*

UNITED STATES PATENT AND TRADEMARK OFFICE

UNITED STATES DEPARTMENT OF COMMERCE
United States Patent and Trademark Office
Address: COMMISSIONER FOR PATENTS
P.O. Box 1450
Alexandria, Virginia 22313-1450
www.uspto.gov

STOEL RIVES LLP - SLC
201 SOUTH MAIN STREET, SUITE 1100
ONE UTAH CENTER
SALT LAKE CITY, UT 84111

Mail Date: 04/21/2010

Applicant	: Thomas F. Calton	: DECISION ON REQUEST FOR
Patent Number	: 7628793	: RECALCULATION of PATENT
Issue Date	: 12/08/2009	: TERM ADJUSTMENT IN VIEW
Appliction No	: 10/618,521	: OF WYETH AND NOTICE OF INTENT TO
Filed	: 07/11/2003	: ISSUE CERTIFICATE OF CORRECTION
		:

The Request for Recalculation is **GRANTED** to the extent indicated.

The patent term adjustment has been determined to be **1805** days. The USPTO will *sua sponte* issue a certificate of correction reflecting the amount of PTA days determined by the recalculation.

Prior to the issuance of the certificate of correction, the USPTO will afford patentee an opportunity to be heard and request reconsideration. Accordingly, patentee has **one month or thirty (30) days**, whichever is longer, to file a request for reconsideration of this patent term adjustment calculation. See 35 U.S.C. 154(b)(3)(B)(ii) and 37 CFR 1.322(a)(4). No extensions of time will be granted under 37 CFR 1.136.

Patentee should use document code PET.OP if electronically filing a request for reconsideration of this patent term adjustment calculation. The patentee must also include the information required by 37 CFR 1.705(b)(2) and the fee required by 37 CFR 1.18(e). If patentee does not file a timely request for reconsideration of this patent term adjustment calculation including the information required by 37 CFR 1.705(b)(2) and the fee required by 37 CFR 1.18(e), the USPTO will issue a certificate of correction reflecting the PTA determination noted above.

Patentee should be aware that in order to preserve the right to review in the United States District Court for the District of Columbia of the USPTO patent term adjustment determination, patentee must ensure that he or she also take the steps required under 35 U.S.C. 154(b)(4)(A) in a timely manner. Nothing in the request for recalculation should be construed as providing an alternative time frame for commencing a civil action under 35 U.S.C. 154(b)(4)(A).

Any questions concerning this decision should be directed to the Office of Patent Legal Administration at 571-272-7702.

SPE RESPONSE FOR CERTIFICATE OF CORRECTION

Paper No.: _____

DATE : 03/13/07

TO SPE OF : ART UNIT 3643

SUBJECT : Request for Certificate of Correction for Appl. No.: **10/618523** Patent No.: **7134956**

Please respond to this request for a certificate of correction within 7 days.

Please review the requested changes/corrections as shown in the **COCIN** document(s) in the IFW application image. No new matter should be introduced, nor should the scope or meaning of the claims be changed.

Please complete the response (see below) and forward the completed response to scanning using document code **COCX**.

Angela Green
Certificates of Correction Branch
703.308.9380 ext. 123

Thank You For Your Assistance

The request for issuing the above-identified correction(s) is hereby:
Note your decision on the appropriate box.

☒ **Approved**	All changes apply.
☐ **Approved in Part**	Specify below which changes **do not** apply.
☐ **Denied**	State the reasons for denial below.

Comments: _____

PETER M. POON
SUPERVISORY PATENT EXAMINER

SPE **Art Unit** 3643

UNITED STATES PATENT AND TRADEMARK OFFICE

COMMISSIONER FOR PATENTS
UNITED STATES PATENT AND TRADEMARK OFFICE
P.O. BOX 1450
ALEXANDRIA, VA 22313-1450
www.uspto.gov

TRASK BRITT
P.O. BOX 2550
SALT LAKE CITY UT 84110

In re application of Frits J. Fallaux et al.	:	
Serial No. : 10/618,526	:	DECISION ON PETITION
Filed : July 11, 2003	:	
Attorney Docket No.: 2578-3833.9US	:	

This is in response to applicant's petition, filed February 17, 2004, to make the above-identified application special under the provisions of 37 CFR 1.102(c) based on the age of the applicant.

The passport of co-inventor Alex J. Van Der Eb shows that he is over 65 years of age. Applicant has satisfied the requirements set forth in M.P.E.P. 708.02, IV.

The petition is **GRANTED.**

The application will be forwarded to the examiner for action on the merits in accordance with this decision.

Should there be any questions with regard to this letter please contact Bruce Campell by letter addressed to the Director, Technology Center 1600, P.O. Box 1450, Alexandria, VA, 22313-1450, or by telephone at (571) 272-0974 or by facsimile transmission at (571) 273-0974.

Bruce Campell

Bruce Campell
Supervisory Patent Examiner / Special Program Examiner
Technology Center 1600

UNITED STATES PATENT AND TRADEMARK OFFICE

1724

COMMISSIONER FOR PATENTS
UNITED STATES PATENT AND TRADEMARK OFFICE
P.O. BOX 1450
ALEXANDRIA, VA 22313-1450
www.uspto.gov

SIERRA PATENT GROUP, LTD.
P O BOX 6149
STATELINE NV 89449

COPY MAILED

FEB 17 2004

OFFICE OF PETITIONS

In re Application of
Moulton
Application No. 10/618,533
Filed: July 11, 2003
Attorney Docket No. MOUL-001
For: ROTATING PERFORATED CYLINDER TREATMENT SYSTEM

: DECISION GRANTING
: PETITION

This is a decision on the petition filed November 10, 2003 (certificate of mailing date November 4, 2003) entitled, "REQUEST TO CORRECT PATENT OFFICE RECORDS." The petition will be treated under 37 CFR 1.10(d), as a request to accord the above-identified application a filing date of July 11, 2003, rather than the presently accorded filing date of July 12, 2003.

Petitioner requests the earlier filing date on the basis that the application was deposited in Express Mail service on July 11, 2003, pursuant to the requirements of 37 CFR 1.10. The petition is accompanied by a copy of a United States Postal Service (USPS) sales receipt showing that Express Mail label no. EV263396265US was purchased on July 11, 2003. The same Express Mail label number is found on the original Transmittal Letter.

Paragraph (d) of 37 CFR 1.10 states that:

> Any person filing correspondence under this section that was received by the Office and delivered by the "Express Mail Post Office to Addressee" service of the USPS, who can show that the "date-in" on the "Express Mail" mailing label or other official notation entered by the USPS was incorrectly entered or omitted by the USPS, may petition the Commissioner to accord the correspondence a filing date as of the date the correspondence is shown to have been deposited with the USPS, provided that:
>
> (1) The petition is filed promptly after the person becomes aware that the Office has accorded, or will accord, a filing date based upon an incorrect entry by the USPS;
>
> (2) The number of the "Express Mail" mailing label was placed on the paper(s) or fee(s) that constitute the correspondence prior to the original mailing by "Express Mail"; and
>
> (3) The petition includes a showing which establishes, to the satisfaction of the Commissioner, that the requested filing date was the date the correspondence was deposited in "Express Mail Post Office to Addressee" service prior to the last scheduled pickup for that day. Any showing pursuant to this paragraph must be corroborated by evidence from the USPS or that came into being after deposit and within one business day of the deposit of the correspondence in the "Express Mail Post Office to Addressee" service of the USPS. .

A grantable petition under 37 CFR 1.10(d) must include "a showing which establishes, to the satisfaction of the Commissioner, that the requested filing date was the date the correspondence

was deposited in "Express Mail Post Office to Addressee" service prior to the last scheduled pickup for that day." In addition, the showing "must be corroborated by evidence from the USPS or that came into being after deposit and within one business day of the deposit of the correspondence in the 'Express Mail Post Office to Addressee' service of the USPS."

The petition filed November 10, 2003 (certificate of mailing date November 4, 2003), is accompanied by the corroborating evidence required by the rule. Accordingly, the petition is **GRANTED**. No petition fee has been or will be charged in connection with this matter.

The application is being returned to the Office of Initial Patent Examination for correction of the filing date to **July 11, 2003** and the mailing of a corrected filing receipt.

Thereafter, the application will be forwarded to Technology Center Art Unit 1724 for examination in due course.

Any inquiries related to this decision should be directed to the undersigned at (703) 308-6712.

E. Shirene Willis

E. Shirene Willis
Senior Petitions Attorney
Office of Petitions

UNITED STATES PATENT AND TRADEMARK OFFICE

Commissioner for Patents
United States Patent and Trademark Office
P.O. Box 1450
Alexandria, VA 22313-1450
www.uspto.gov

TYCO ELECTRONICS CORPORATION
INTELLECTUAL PROPERTY LAW DEPT.
MS R20/2B
307 CONSTITUTION DRIVE
MENLO PARK, CA 94025-1164

COPY MAILED

JUN 1 4 2005

OFFICE OF PETITIONS

In re Application of	:	
Becker et al.	:	
Application No. 10/618,534	:	ON PETITION
Filed: July 11, 2003	:	
Attorney Docket No. MP1713-US2	:	

This is a decision on the petition under 37 C.F.R. § 1.137(b), filed May 20, 2005, to revive the above-identified application.

The petition is **GRANTED.**

The above-identified application became abandoned for failure to submit the issue fee and publication fee in a timely manner in reply to the Notice of Allowance mailed February 17, 2005, which set a statutory period for reply of three (3) months. Accordingly, the above-identified application became abandoned on May 18, 2005.

Petitioner has met the requirements to revive the above-identified application pursuant to 37 CFR 1.137(b).

This matter is being referred to the Publishing Division for processing into a patent.

Telephone inquiries regarding this decision should be directed to the undersigned at (571) 272-3282.

Liana Chase
Petitions Examiner
Office of Petitions
Office of the Deputy Commissioner
for Patent Examination Policy

UNITED STATES PATENT AND TRADEMARK OFFICE

COMMISSIONER FOR PATENTS
UNITED STATES PATENT AND TRADEMARK OFFICE
P.O. BOX 1450
ALEXANDRIA, VA 22313-1450
www.uspto.gov

DOCKET CLERK
SCHEEF & STONE, L.L.P.
SUITE 1400
5956 SHERRY LANE
DALLAS, TX 75225

COPY MAILED
AUG 25 2006
OFFICE OF PETITIONS

In re Application of	:	
Peter Gansen, et al.	:	DECISION ON REQUEST
Application No. 10/618,558	:	TO WITHDRAW
Filed: July 11, 2003	:	FROM RECORD
Attorney Docket No. 64215-028 CIP	:	

This is a decision on the Request to Withdraw as attorney or agent of record under 37 CFR § 1.36(b), filed April 11, 2006.

The request is **NOT APPROVED** as moot.

The request was signed by Robert C. Haldiman on behalf of himself and all the other attorneys/agents of record associated with Customer No. 29493. However, a review of the file record indicates that the assignee of the patent application revoked all previous powers of attorney on May 31, 2006. Accordingly, the request to withdraw under 37 CFR §1.36(b) is moot.

All future communications from the Office will continue to be directed to the below-listed address until otherwise notified by applicant.

There is no outstanding Office action that requires a reply from the applicant.

Telephone inquires concerning this decision should be directed to the undersigned at (571) 272- 3204.

Sherry D. Brinkley
Petitions Examiner
Office of Petitions

cc: WHITHAM, CURTIS & CHRISTOFFERSON & COOK, P.C.
11491 SUNSET HILLS ROAD
SUITE 340
RESTON VA 20190

UNITED STATES PATENT AND TRADEMARK OFFICE

COMMISSIONER FOR PATENTS
UNITED STATES PATENT AND TRADEMARK OFFICE
P.O. BOX 1450
ALEXANDRIA, VA 22313-1450
WWW.USPTO.GOV

Paper No. None

TOWNSEND AND TOWNSEND AND CREW, LLP
TWO EMBARCADERO CENTER
EIGHTH FLOOR
SAN FRANCISCO CA 94111-3834

COPY MAILED
SEP 1 1 2006
OFFICE OF PETITIONS

In re Application of :
Luigi Di Gregorio :
Application No. 10/618,564 : DECISION ON PETITION
Filed: July 10, 2003 : UNDER 37 C.F.R. §1.181
Attorney Docket No.: 021111- :
000800US :
Title: HIGH SPEED DATA ACCESS :
MEMORY ARRAYS :

This is a decision on the petition filed on June 19, 2006, pursuant to 37 C.F.R. §1.181, requesting that the holding of abandonment in the above-identified application be withdrawn.

BACKGROUND

The above-identified application became abandoned for failure to reply in a timely manner to the Notice of Missing Parts (notice), mailed October 9, 2003, which set a shortened statutory period for reply of two months. No response was received, and no extensions of time under the provisions of 37 C.F.R. §1.136(a) were requested. Accordingly, the above-identified application became abandoned on December 10, 2003. A notice of abandonment was mailed on April 19, 2006.

RELEVANT PORTION OF THE C.F.R.

37 C.F.R. §1.8(b) sets forth, *in toto*:

> (b) In the event that correspondence is considered timely filed by being mailed or transmitted in accordance with paragraph (a) of this section, but not received in the U.S. Patent and Trademark Office after a reasonable amount of time has elapsed from the time of mailing or transmitting of the correspondence, or after the application is held to be abandoned, or after the

proceeding is dismissed, terminated, or decided with prejudice, the correspondence will be considered timely if the party who forwarded such correspondence:

(1) Informs the Office of the previous mailing or transmission of the correspondence promptly after becoming aware that the Office has no evidence of receipt of the correspondence;

(2) Supplies an additional copy of the previously mailed or transmitted correspondence and certificate; and

(3) Includes a statement which attests on a personal knowledge basis or to the satisfaction of the Director to the previous timely mailing or transmission. If the correspondence was sent by facsimile transmission, a copy of the sending unit's report confirming transmission may be used to support this statement.

ANALYSIS

With the present petition, Petitioner has asserted that a response was filed on November 4, 2003. Petitioner has submitted a copy of this submission, and it is noted that it contains a certificate of facsimile transmission dated November 4, 2003.

Certificate of facsimile transmission practice provides a mechanism by which Applicants may evince that a paper was timely transmitted to the Office, in the event that the correspondence is not received.

Petitioner's submission has been reviewed: with the present petition, Petitioner has informed the Office of the previous facsimile transmission, provided an additional copy of the previously transmitted correspondence, and has included a statement which attests on a personal knowledge basis or to the satisfaction of the Director to the previous timely transmission.

Petitioner has requested that the holding of abandonment in the above-identified application be withdrawn. It is clear that a response was timely submitted. Considering the facts and circumstances of the delay at issue, as set forth on petition, it is concluded that petitioner has met his burden of establishing that a submission was timely submitted.

Accordingly, the petition under 37 C.F.R. §1.181(a) is **GRANTED**. The holding of abandonment is **WITHDRAWN.**

The Office of Initial Patent Examination will be notified of this decision.

Telephone inquiries regarding *this decision* should be directed to the undersigned at (571) 272-3225[1]. All other inquiries concerning examination procedures or status of the application should be directed to the Technology Center.

Paul Shanoski
Senior Attorney
Office of Petitions
United States Patent and Trademark Office

---

1 Petitioner will note that all practice before the Office should be in writing, and the action of the Office will be based exclusively on the written record in the Office. See 37 C.F.R. §1.2. As such, Petitioner is reminded that no telephone discussion may be controlling or considered authority for Petitioner's further action(s).

UNITED STATES PATENT AND TRADEMARK OFFICE

COMMISSIONER FOR PATENTS
UNITED STATES PATENT AND TRADEMARK OFFICE
P.O. BOX 1450
ALEXANDRIA, VA 22313-1450
www.uspto.gov

MAIL

JAN 24 2005

DIRECTOR OFFICE
TECHNOLOGY CENTER 2600

BOZICEVIC, FIELD & FRANCIS LLP
1900 UNIVERSITY AVE
SUITE 200
EAST PALO ALTO CA 94303

In re Application of:
Jerome M. J. DECLERCK, et al.
Application No. 10/618,565
Filed: July 11, 2003
For: **REGISTRATION OF MULTI-MODALITY DATA IN IMAGING**

DECISION ON PETITION TO MAKE SPECIAL

This is a decision on the petition, filed on November 10, 2004, under M.P.E.P. § 708.02(X), inventions relating to HIV/AIDS and Cancer.

The petition is **GRANTED**.

The petition meets the requirements of MPEP § 708.02 (X).

The application file is being forwarded to the Examiner for accelerated examination in accordance with M.P.E.P. § 708.02.

Kenneth A. Wieder
Special Program Examiner
Technology Center 2600
Communications

UNITED STATES PATENT AND TRADEMARK OFFICE

Commissioner for Patents
United States Patent and Trademark Office
P.O. Box 1450
Alexandria, VA 22313-1450
www.uspto.gov

GLENN PATENT GROUP
3475 EDISON WAY, SUITE L
MENLO PARK, CA 94025

MAILED

SEP 14 2009

OFFICE OF PETITIONS

ON PETITION

In re Application of	:	
Nemirofsky et al.	:	
Application No. 10/618,569	:	
Filed: July 11, 2003	:	
Attorney Docket No. EXPH0003	:	

This is a decision in response to a petition under 37 CFR 1.137(b), filed August 3, 2009, to revive the above-identified application.

The petition is **DISMISSED AS MOOT**.

A review of the record discloses that a final Office action was mailed on December 22, 2008, which set a shortened statutory period for reply of three (3) months. An extensions of time pursuant to the provisions of 37 CFR 1.136(a) was filed on June 22, 2009. Therefore, the response in the form of an amendment filed June 22, 2009 is considered timely.

Since no abandonment exists, the petition under 37 CFR 1.137(b) is unnecessary. The petition fee of $810 and Request for Continued Examination (RCE) fee of $405 will be credited to counsel's deposit account in due course.

The application is being referred to Technology Center AU 3688 for appropriate action by the Examiner in the normal course of business on the reply received June 22, 2008.

Telephone inquiries concerning this decision should be directed to Alicia Kelley at (571) 272-6059. Inquiries relating to further prosecution should be directed to the Technology Center at (571) 272-3600.

/SDB/

Sherry D. Brinkley
Petitions Examiner
Office of Petitions

UNITED STATES PATENT & TRADEMARK OFFICE
Washington, D.C. 20231

REQUEST FOR PATENT FEE REFUND

1 Date of Request: 09/11/09

2 Serial/Patent # 10/618,569

	3 Please refund the following fee(s):	4 PAPER NUMBER	5 DATE FILED	6 AMOUNT
	Filing			$
	Amendment			$
	Extension of Time			$
	Notice of Appeal/Appeal			$
X	Petition			$ 810.00
	Issue			$
	Cert of Correction/Terminal Disc.			$
	Maintenance			$
	Assignment			$
X	Other RCE			$ 405.00

7 TOTAL AMOUNT OF REFUND $ 1,215.00

8 TO BE REFUNDED BY:

	Treasury Check
	Credit Deposit A/C #:
	9 0 7 -- 1 4 4 5

10 REASON:

	Overpayment
	Duplicate Payment
X	No Fee Due (Explanation):

Patent Application is not abandoned.

11 REFUND REQUESTED BY:

TYPED/PRINTED NAME: A. Kelley TITLE: Petitions Examiner

SIGNATURE: A. Kelley PHONE: 2-6059

OFFICE: Office of Petitions

****

THIS SPACE RESERVED FOR FINANCE USE ONLY:

APPROVED: kd DATE: 9/11/09

Instructions for completion of this form appear on the back. After completion, attach white and yellow copies to the official file and mail or hand-carry to:

Office of Finance
Refund Branch
Crystal Park One, Room 802B

FORM PTO 1577
(01/90)

Attorney's Docket No.: 10225-042001

OIPE JC54
JAN 0 8 2004
PATENT & TRADEMARK OFFICE

IN THE UNITED STATES PATENT AND TRADEMARK OFFICE

Applicant : Blaise Bossy et al.
Serial No. : 10/618,577
Filed : July 11, 2003
Title : METHOD FOR DETECTING RARE EVENT

Art Unit : 1645
Examiner : Unknown

Commissioner for Patents
P.O. Box 1450
Alexandria, VA 22313-1450

REQUEST FOR CORRECTED OFFICIAL FILING RECEIPT

Please correct the Filing Receipt for the above-referenced application by capitalizing Robert T. Ellis' middle initial.

Please supply a corrected Filing Receipt to the undersigned with respect to this application. A copy of the original Filing Receipt showing the desired changes in red ink is attached for your convenience.

No fee is believed to be due. If, however, there are any charges or credits, please apply them to Deposit Account No. 06-1050.

Respectfully submitted,

Reg No. 40,900

Scott C. Harris
Reg. No. 32,030 for

Date: 1/6/04

Fish & Richardson P.C.
12390 El Camino Real
San Diego, California 92130
Telephone: (858) 678-5070
Facsimile: (858) 678-5099
10356333.doc

CERTIFICATE OF MAILING BY FIRST CLASS MAIL

I hereby certify under 37 CFR §1.8(a) that this correspondence is being deposited with the United States Postal Service as first class mail with sufficient postage on the date indicated below and is addressed to the Commissioner for Patents, P.O. Box 1450, Alexandria, VA 22313-1450.

January 6, 2004
Date of Deposit

Teri Barnett
Signature

Teri Barnett
Typed or Printed Name of Person Signing Certificate

SCH/MPR

OIPE JC54
JAN 0 8 2004
PATENT & TRADEMARK OFFICE

UNITED STATES PATENT AND TRADEMARK OFFICE

UNITED STATES DEPARTMENT OF COMMERCE
United States Patent and Trademark Office
Address: COMMISSIONER FOR PATENTS
P.O. Box 1450
Alexandria, Virginia 22313-1450
www.uspto.gov

APPL NO.	FILING OR 371 (c) DATE	ART UNIT	FIL FEE REC'D	ATTY.DOCKET NO	DRAWINGS	TOT CLMS	IND CLMS
10/618,577	07/11/2003	1645	450	10225-042001	10	18	1

CONFIRMATION NO. 3790

UPDATED FILING RECEIPT

OC000000011497446

20985
FISH & RICHARDSON, PC
12390 EL CAMINO REAL
SAN DIEGO, CA 92130-2081

RECEIVED
DEC 17 2003
DOCKETING
SAN DIEGO

Date Mailed: 12/15/2003

Receipt is acknowledged of this regular Patent Application. It will be considered in its order and you will be notified as to the results of the examination. Be sure to provide the U.S. APPLICATION NUMBER, FILING DATE, NAME OF APPLICANT, and TITLE OF INVENTION when inquiring about this application. Fees transmitted by check or draft are subject to collection. Please verify the accuracy of the data presented on this receipt. **If an error is noted on this Filing Receipt, please write to the Office of Initial Patent Examination's Filing Receipt Corrections, facsimile number 703-746-9195. Please provide a copy of this Filing Receipt with the changes noted thereon. If you received a "Notice to File Missing Parts" for this application, please submit any corrections to this Filing Receipt with your reply to the Notice. When the USPTO processes the reply to the Notice, the USPTO will generate another Filing Receipt incorporating the requested corrections (if appropriate).**

Applicant(s)

Blaise Bassy, Carlsbad, CA;
Robert T. Ellis, Dana Point, CA;
Kenneth D. Bauer, San Clemente, CA;

* No Docketing Required *
Reviewed By Practice Systems
Initials: CZM
Reviewed By Billing Secretary
Initials: lmb

Domestic Priority data as claimed by applicant

This application is a CIP of 09/619,033 07/19/2000 ABN
which claims benefit of 60/144,529 07/19/1999
This application 10/618,577
is a CIP of 10/081,714 02/20/2002 PAT 6,631,203
which is a CON of 09/344,308 06/24/1999 PAT 6,418,236
which claims benefit of 60/129,384 04/13/1999

Foreign Applications

If Required, Foreign Filing License Granted: 10/09/2003

Projected Publication Date: 03/25/2004

Non-Publication Request: No

Early Publication Request: No

**** SMALL ENTITY ****

Title

Method for detecting rare event

Preliminary Class

435

LICENSE FOR FOREIGN FILING UNDER
Title 35, United States Code, Section 184
Title 37, Code of Federal Regulations, 5.11 & 5.15

GRANTED

The applicant has been granted a license under 35 U.S.C. 184, if the phrase "IF REQUIRED, FOREIGN FILING LICENSE GRANTED" followed by a date appears on this form. Such licenses are issued in all applications where the conditions for issuance of a license have been met, regardless of whether or not a license may be required as set forth in 37 CFR 5.15. The scope and limitations of this license are set forth in 37 CFR 5.15(a) unless an earlier license has been issued under 37 CFR 5.15(b). The license is subject to revocation upon written notification. The date indicated is the effective date of the license, unless an earlier license of similar scope has been granted under 37 CFR 5.13 or 5.14.

This license is to be retained by the licensee and may be used at any time on or after the effective date thereof unless it is revoked. This license is automatically transferred to any related applications(s) filed under 37 CFR 1.53(d). This license is not retroactive.

The grant of a license does not in any way lessen the responsibility of a licensee for the security of the subject matter as imposed by any Government contract or the provisions of existing laws relating to espionage and the national security or the export of technical data. Licensees should apprise themselves of current regulations especially with respect to certain countries, of other agencies, particularly the Office of Defense Trade Controls, Department of State (with respect to Arms, Munitions and Implements of War (22 CFR 121-128)); the Office of Export Administration, Department of Commerce (15 CFR 370.10 (j)); the Office of Foreign Assets Control, Department of Treasury (31 CFR Parts 500+) and the Department of Energy.

NOT GRANTED

No license under 35 U.S.C. 184 has been granted at this time, if the phrase "IF REQUIRED, FOREIGN FILING LICENSE GRANTED" DOES NOT appear on this form. Applicant may still petition for a license under 37 CFR 5.12, if a license is desired before the expiration of 6 months from the filing date of the application. If 6 months has lapsed from the filing date of this application and the licensee has not received any indication of a secrecy order under 35 U.S.C. 181, the licensee may foreign file the application pursuant to 37 CFR 5.15(b).

UNITED STATES PATENT AND TRADEMARK OFFICE

Commissioner for Patents
United States Patent and Trademark Office
P.O. Box 1450
Alexandria, VA 22313-1450
www.uspto.gov

KILPATRICK STOCKTON LLP
607 14th Street, N.W.
Washington, DC 20005

MAILED

MAY 1 2 2005

Technology Center 2100

In re Application of:
Elnar BREEN
Application No. 10/618,583
Filed: July 15, 2003
For: METHOD AND SYSTEM FOR PREPARING AND ADAPTING TEXT, IMAGES AND VIDEO FOR DELIVERY OVER A NETWORK

DECISION ON REQUEST TO WITHDRAW AS ATTORNEY OR AGENT

This is a decision on the Request to Withdraw from Representation filed January 14, 2005.

A grantable request to withdraw as attorney of record should indicate thereon the present mailing addresses of the attorney(s) who is/are withdrawing from the record and of the applicant. The request for withdrawal must be signed by every attorney seeking to withdraw or contain a clear indication that one attorney is signing on behalf of another/others. A request to withdraw will not be approved unless at least 30 (thirty) days would remain between the date of approval and the later of the expiration date of a time to file a response or the expiration date of the maximum time period which can be extended under 37 C.F.R. § 1.136(a). The effective date of withdrawal being the date of decision and not the date of request. See M.P.E.P. § 402.06. 37 C.F.R. § 1.36 **further requires that the applicant or patent owner be notified of the withdrawal of the attorney or agent.**

There is no indication that Applicant has been notified of the request for withdrawal. Accordingly, the request is **DENIED.**

All future communications from the Office will continue to be directed to the above-listed address until otherwise notified by applicant. This correspondence address is provided by the withdrawn attorney(s). Applicant is reminded of the obligation to promptly notify the Patent and Trademark Office (Office) of any change in correspondence address to ensure receipt of all communications from the Office.

Vincent N. Trans
Special Program Examiner
Technology Center 2100
Computer Architecture, Software, and
Information Security
571-272-3613

UNITED STATES PATENT AND TRADEMARK OFFICE

Commissioner for Patents
United States Patent and Trademark Office
P.O. Box 1450
Alexandria, VA 22313-1450
www.uspto.gov

KILPATRICK STOCKTON LLP
607 14TH STREET, N.W.
WASHINGTON, DC 20005

MAILED

FEB 2 8 2006

Technology Center 2100

In re Application of: Elnar Breen
Application No. 10/618,583
Filed: July 15, 2003
For: METHOD AND SYSTEM FOR PREPARING AND ADAPTING TEXT, IMAGES AND VIDEO FOR DELIVERY OVER A NETWORK

DECISION ON REQUEST TO WITHDRAW AS ATTORNEY OR AGENT

This is a decision on the Request To Withdraw from Representation filed August 10, 2005.

A grantable request to withdraw as attorney of record should indicate thereon the present mailing addresses of the attorney(s) who is/are withdrawing from the record and of the applicant. The request for withdrawal must be signed by every attorney seeking to withdraw or contain a clear indication that one attorney is signing on behalf of another/others. A request to withdraw will not be approved unless at least 30 (thirty) days would remain between the date of approval and the later of the expiration date of a time to file a response or the expiration date of the maximum time period which can be extended under 37 C.F.R. § 1.136(a). The effective date of withdrawal is the date of decision and not the date of request. See M.P.E.P. § 402.06. 37 C.F.R. § 10.40(a) further requires that the applicant or patent owner be notified of the withdrawal of the attorney or agent.

The request is **GRANTED**.

All future communications from the U.S. Patent and Trademark Office (Office) will be directed to the below-listed address until otherwise notified by applicant. This correspondence address is provided by the withdrawn attorney(s). Applicant is reminded of the obligation to promptly notify the Office of any change in correspondence address to ensure receipt of all communications from the Office.

Vincent N. Trans
Special Program Examiner
Technology Center 2100
Computer Architecture, Software, and
Information Security
571-272-3613

cc: MR. ELNAR BREEN, CEO
C/O JPHN BEYER-AMESEN, DEVICE INDEPENDENT SOFTWARE, INC.
HAMMERSTADSGT 23A
OSLO 0363
NORWAY

UNITED STATES PATENT AND TRADEMARK OFFICE

Commissioner for Patents
United States Patent and Trademark Office
P.O. Box 1450
Alexandria, VA 22313-1450
www.uspto.gov

Morrison & Foerster, LLP
1650 Tyson Boulevard
Suite 300
McLean, VA 22102

COPY MAILED

APR 2 6 2007

OFFICE OF PETITIONS

In re Application of:
Makoto Tsuji
Application No.: 10/618,588
Filed: July 15, 2003
Atty's Docket No.: 204552029300

DECISION ON PETITION UNDER 37 CFR 1.137(b)

This is a decision on the petition for revival of the above-entitled application under 37 CFR 1.137(b), filed September 14, 2006.

The petition is **GRANTED**.

The above-identified application became abandoned for failure to submit the issue and publication fees in a timely manner in reply to the Notice Of Allowance mailed April 04, 2006, which set a statutory period for reply of three (3) months. Accordingly, the above-identified application became abandoned at midnight on July 04, 2006.

On September 14, 2006, applicant filed the petition for revival under 37 CFR 1.137(b) considered herein. The petition satisfies the conditions for revival pursuant to the provisions of 37 CFR 1.137(b) in that it includes: (1) the petition fee; (2) the required statement of unintentional delay; and (3) the required reply in the form of payment of the issue and publication fees. Accordingly, the issue and publication fee payments are accepted as having been unintentionally delayed.

The application is being referred to the Office Of Publications.

Telephone inquiries concerning this decision should be directed to the undersigned.

Derek A. Putonen
Attorney Advisor
(571) 272-3294

UNITED STATES PATENT AND TRADEMARK OFFICE

COMMISSIONER FOR PATENTS
UNITED STATES PATENT AND TRADEMARK OFFICE
P.O. BOX 1450
ALEXANDRIA, VA 22313-1450
www.uspto.gov

2621

FITZPATRICK CELLA HARPER & SCINTO
30 ROCKEFELLER PLAZA
NEW YORK NY 10112

COPY MAILED

FEB 05 2004

OFFICE OF PETITIONS

In re Application of Sakagawa, et al. Application No. 10/618,610 Filed: July 15, 2003 Attorney Docket No. 00862.023136. For: VIRTUAL SPACE RENDERING/DISPLAY APPARATUS AND VIRTUAL SPACE RENDERING/DISPLAY METHOD	: : : : : :	DECISION ON PETITION

This is a decision on the petition filed November 10, 2003 requesting that Figures 25 and 26 be accorded a filing date of July 15, 2003. The petition will be treated under 37 CFR 1.53(e).

The application was filed on July 15, 2003. On October 14, 2003, the Office of Initial Patent Examination mailed a "Notice of Omitted Item(s) in a Nonprovisional Application" informing petitioners that Figures 25 and 26, as described in the specification, appeared to have been omitted.

Petitioners request that Figures 25 and 26 be accorded a filing date of July 15, 2003 on the basis that 26 sheets of formal drawing figures, including Figures 25 and 26, were received in the Patent and Trademark Office (PTO) on July 15, 2003. In support, the instant petition is accompanied by a copy of applicants' itemized postcard receipt showing an Office of Initial Patent Examination generated barcode citing July 15, 2003 as the date of receipt. The postcard lists, *inter alia*, that the filing included 26 sheets of drawings.

The return postcard constitutes *prima facie* evidence that 26 sheets of formal drawing figures were filed on July 15, 2003. MPEP 503. A review of the application file reveals that there are 24 sheets of drawing figures present. The missing sheets of drawings correspond to that which would have contained Figures 25 and 26.

Accordingly, the petition under 37 CFR 1.53(e) is **GRANTED**. No petition fee has been or will be charged in connection with this matter.

The application is being returned to Office of Initial Patent Examination for further processing, with a filing date of **July 15, 2003**, using the copy of Figures 25 and 26 submitted with the instant petition. Office records will be corrected to show that 26 sheets of drawings were present on initial filing.

Any inquiries pertaining to this matter may be directed to the undersigned at (703) 308-6712.

E. Shirene Willis

E. Shirene Willis
Senior Petitions Attorney
Office of Petitions

UNITED STATES PATENT AND TRADEMARK OFFICE

Commissioner for Patents
United States Patent and Trademark Office
P.O. Box 1450
Alexandria, VA 22313-1450
www.uspto.gov

Date: 07/07/08

Patent No. : 7356093 B2
Ser. No. : 10/618,632
Inventor(s) : LIU, WEN-CHUNG
Issued : 04/08/08
Title : **ENHANCED WIRELESS COMMUNICATION SYSTEM AND METHOD THEREOF**
Docket No. : **681954.0054**

Re: Request for Certificate of Correction

Consideration has been given your request for the issuance of a certificate of correction for the above-identified patent under the provisions of Rule(s) 1.322 and/or 1.323.

Assignees' names and addresses (assignment data) printed in a patent, are based *solely* on information supplied in the appropriate space for identifying the assignment data, i.e., item 3 of the Issue Fee Transmittal Form PTOL-85B. Granting of a request under 37 CFR 3.81(b) is required to correct applicant's error providing ***incorrect or erroneous*** assignment data, *before* issuance of a Certificate of Correction, under 37 CFR 1.323 *(see Manual of Patent Examining Procedures (M.P.E.P) Chp.1400, sect. 1481).* This procedure is required *at any time after the issue fee is paid*, including after issuance of the patent.

In view of the foregoing, your request, in this mater, is hereby denied.

A request to correct the Assignee under 37 CFR 3.81(b) should include:

A. **the processing fee set forth in 37 CFR 1.117(h) (currently $130);**
B. a statement that the failure to include the correct assignee name on the PTOL-85B was inadvertent; and
C. a copy of the Notice of Recordation of Assignment Document, reflecting the reel and frame number where the assignment(s) is recorded and/or reflecting proof of *the date* the assignment was submitted for recordation.

In the Request, Applicant(s) may request that the file be forwarded to Certificates of Correction Branch, for issuance of a Certificate of Correction, if the Request is granted.

Any request under 37 CFR 3.81(b) should be directed to the following address or facsimile number:

By mail: Mail Stop PETITIONS

Commissioner for Patents
Post Office Box 1450
Alexandria, VA 22313-1450

By hand: Customer Service Window
Mail Stop Petitions
Randolph Building
401 Dulany Street
Alexandria, VA 22314

By fax: (703) 872-9306
ATTN: Office of Petitions

If a fee (currently $100) was previously submitted for consideration of a Request for Certificate of Correction, under CFR 1.323, to correct assignment data, no additional fee is required.

Lamonte M. Newsome

Lamonte M. Newsome
For Mary Diggs, Supervisor
Decisions & Certificates
Of Correction Branch
(703)-305-5358 or (703) 308-9390 #112

Akin Gump LLP - Silicon Valley
3000 El Camino Real
Two Palo Alto Square, Suite 400
Palo Alto CA 94306

LMN

2651

UNITED STATES PATENT AND TRADEMARK OFFICE

COMMISSIONER FOR PATENTS
UNITED STATES PATENT AND TRADEMARK OFFICE
P.O. BOX 1450
ALEXANDRIA, VA 22313-1450
www.uspto.gov

DICKSTEIN SHAPIRO MORIN & OSHINSKY LLP
2101 L STREET NW
WASHINGTON DC 20037-1526

COPY MAILED

FEB 13 2004

OFFICE OF PETITIONS

In re Application of
Haruyuki Suzuki
Application No. 10/618,722
Filed: July 15, 2003
For: OPTICAL RECORDING/REPRODUCING METHOD AND APPARATUS

ON PETITION

This is a decision on the petition filed November 20, 2003, requesting that the Notice of Omitted Items, mailed October 15, 2003, be withdrawn, which is treated as petition under 37 CFR 1.53.

A "Notice of Omitted Item(s) in a Nonprovisional Application" was mailed October 15, 2003, stating that the application had been accorded a filing date of July 15, 2003 but that Figures 3 and 4 appeared to have been omitted.

Petitioners concede that the failure to include Figures 3 and 4 with the other application papers was inadvertent but that the application as filed, included a statement incorporating by reference the prior application. Petitioner asserts that the instant application is a continuation of parent application no. 09/741,344 filed December 21, 2000 (now Patent No. 6,621,780 issued September 16, 2003), which included the drawings of Figures 3 and 4, and that the instant application contained a statement incorporating the parent application, including Figures 3 and 4, by reference.

MPEP 201.06 (c) states that:

> For the incorporation by reference to be effective as a proper safeguard against the omission of a portion of a prior application, the incorporation by reference statement must be included in the specification-as-filed, or transmittal letter-as-filed, or in an amendment specifically referred to in an oath or declaration executing the application.

Obviously, in view of the incorporation by reference of the prior application, the drawings of Figures 3 and 4 are not new matter if it was a part of the disclosure of the prior application. New drawings may be entered by the primary examiner without petition so long as the new drawings contain no new matter. See MPEP § 608.02(a).

Accordingly, the petition is **Dismissed**.

Since the present petition was not necessitated by any error on the part of the Office, the $130.00 petition fee will not be refunded.

The application is being returned to the Office of Initial Patent Examination for further processing with a filing date of July 15, 2003, with an indication in Office records that Figures 3 and 4 while not included with the application papers upon filing, was a part of the original disclosure.

Telephone inquiries concerning this matter may be directed to the undersigned Petitions Attorney at (703) 305-4497.

Patricia Faison-Ball

Patricia Faison-Ball
Senior Petitions Attorney
Office of Petitions

UNITED STATES PATENT AND TRADEMARK OFFICE

Commissioner for Patents
United States Patent and Trademark Office
P.O. Box 1450
Alexandria, VA 22313-1450
www.uspto.gov

DICKSTEIN SHAPIRO MORIN & OSHINSKY LLP
2101 L STREET NW
WASHINGTON, DC 20037

COPY MAILED

NOV 1 8 2005

OFFICE OF PETITIONS

In re Application of	:
Haruyuki Suzuki	:
Application No. 10/618,722	: DECISION DISMISSING PETITION
Filed: July 15, 2003	: UNDER 37 CFR 1.313(a)
Attorney Docket No. R2184.0090/P090-A	:

This is a decision on the petition under 37 CFR 1.313(a), filed November 10, 2005, requesting withdrawal of the above-identified application from issue.

The petition is **dismissed** as moot for the reasons stated below.

A review of the file record discloses that a Notice of Allowance was mailed on August 12, 2005, with the issue fee being due on or before November 14, 2005. The petition states that the issue fee in this case has not been paid.

The filing of a petition under 37 CFR 1.313(a) is unnecessary, since the mere filing of an RCE and submission will effectively withdraw an application from issue prior to payment of the issue fee. In view thereof, the petition to withdraw from issue is dismissed as involving a moot issue. *Note* MPEP 706.07(h)(IX).

Inquiries concerning this decision may be directed to the undersigned at (571) 272-3218.

The matter is being referred to Technology Center AU 2655 for appropriate processing of the RCE filed November 10, 2005, and for consideration of the concurrently filed amendment and Information Disclosure Statement.

Frances Hicks
Petitions Examiner
Office of Petitions

UNITED STATES PATENT AND TRADEMARK OFFICE

Commissioner for Patents
United States Patent and Trademark Office
P.O. Box 1450
Alexandria, VA 22313-1450
www.uspto.gov

SERIAL NUMBER	FILING DATE	FIRST NAMED APPLICANT	ATTORNEY DOCKET NO.
10/618,736			

EXAMINER
Alsomiri
3662

DATE MAILED:

This is a communication from the examiner in charge of your application
COMMISSIONER OF PATENTS AND TRADEMARKS

The petition filed October 7, 2004 under 37 CFR §1.97(d)(2)(ii) for consideration of an information disclosure statement filed after allowance has been:

[X] GRANTED.

[ ] DENIED.

The petition lacks:

[ ] The required fee under 37 CFR §§1.97(d)(2)(iii) and 1.17(i)(1).

[ ] A proper certification as specified in 37 CFR §§1.97(d)(2)(i) and 1.97(e)

The information disclosure statement has been placed of record in the file but will not be considered by the examiner.

Thomas H. Tarcza

Thomas H. Tarcza
SPE Art Unit 3662
703-306-4171

UNITED STATES PATENT AND TRADEMARK OFFICE

Commissioner for Patents
United States Patent and Trademark Office
P.O. Box 1450
Alexandria, VA 22313-1450
www.uspto.gov

ANTONELLI, TERRY, STOUT & KRAUS
1300 NORTH SEVENTEENTH STREET
SUITE 1800
ARLINGTON VA 22209-3873

COPY MAILED

JAN 16 2007

OFFICE OF PETITIONS

In re Application of	:
Nobuyuki Ishige et al	:
Application No. 10/618,748	: DECISION GRANTING PETITION
Filed: July 15, 2003	: UNDER 37 CFR 1.137(b)
Attorney Docket No. 501.42822X00	:

This is a decision on the petition under 37 CFR 1.137(b), filed September 8, 2006, to revive the above-identified application.

The petition is **GRANTED**.

The petition satisfies the conditions for revival pursuant to the provisions of 37 CFR 1.137(b) in that (1) the reply in the form of an RCE and an amendment; (2) the petition fee; and (3) the required statement of unintentional delay have been received. Accordingly, the reply to the Final Rejection of January 11, 2006, is accepted as having been unintentionally delayed.

Telephone inquiries concerning this decision should be directed to the undersigned at (571) 272-3208.

This matter is being referred to Technology Center AU 2871.

Karen Creasy

Karen Creasy
Petitions Examiner
Office of Petitions

UNITED STATES PATENT AND TRADEMARK OFFICE

Commissioner for Patents
United States Patent and Trademark Office
P.O. Box 1450
Alexandria, VA 22313-1450
www.uspto.gov

OBLON SPIVAK McCLELLAND MAIER & NEUSTADT PC
1940 DUKE STREET
ALEXANDRIA, VA 22314

COPY MAILED

FEB 17 2006

OFFICE OF PETITIONS

In re Application of	:
Makoto Ouchi et al	:
Application No. 10/618,761	: DECISION GRANTING PETITION
Filed: July 15, 2003	: UNDER 37 CFR 1.313(c)(2)
Attorney Docket No. 240348US0X	:

This is a decision on the petition, filed February 16, 2006, under 37 CFR 1.313(c)(2) to withdraw the above-identified application from issue after payment of the issue fee.

The petition is **GRANTED**.

The above-identified application is withdrawn from issue for consideration of a submission under 37 CFR 1.114 (request for continued examination). See 37 CFR 1.313(c)(2).

Petitioner is advised that the issue fee paid on January 23, 2006 in the above-identified application cannot be refunded. If, however, the above-identified application is again allowed, petitioner may request that it be applied towards the issue fee required by the new Notice of Allowance.[1]

Telephone inquiries should be directed to the undersigned at (571) 272-3218.

This matter is being referred to Technology Center AU 1713 for processing of the request for continued examination under 37 CFR 1.114 and for consideration of the Information Disclosure Statement.

Frances Hicks
Petitions Examiner
Office of Petitions

C:\Documents and Settings\FHicks\My Documents\470\Feb9\618761.wpd

---

[1] *The request to apply the issue fee to the new Notice may be satisfied by completing and returning the new Issue Fee Transmittal Form PTOL-85(b) (along with any balance due at the time of payment), which includes the following language thereon: "Commissioner for Patents is requested to apply the Issue Fee and Publication Fee (if any) or re-apply any previously paid issue fee to the application identified above." Petitioner is advised that, whether a fee is indicated as being due or not, the Issue Fee Transmittal Form* **must** *be completed and timely submitted to avoid abandonment. Note the language in bold text on the first page of the Notice of Allowance and Fee(s) Due (PTOL-85).*

UNITED STATES DEPARTMENT OF COMMERCE
Patent and Trademark Office
ASSISTANT SECRETARY OF COMMERCE AND
COMMISSIONER OF PATENTS AND TRADEMARKS
Washington, DC 20231

1/18/08

Patent No. : 7264957
Inventor(s) : Paul et al.
Issued : 9/4/2007
Title : POLYNUCLEIC ACIDS ISOLATED FROM A PORCINE REPRODEUCTIVE AND RESPIRATORY SYNDROME VIRUS PRRSV, PROTEIN ENCODED BY THE POLYNUCLEIC ACIDS, VACCINES BASED ON THE PROTEINS AND /OR POLYNUCLEIC ACIDS A METHOD OF PROTECTING A PIG FROM PRRSV AND A METHOD OF DEFECTING A PRSSMETHOD FOR EVALUATING LIPID A ANALOG –CONTAINING INJECTION PRRS
Atty.doc./File No.

Request for Certificates of Correction

Consideration has been given to your request for the issuance of a Certificate of Correction, for the above – identified patent under the provisions of CFR 1.322.

Inspection of the application for the patent reveals that claim 1 & 2 is printed in accordance with the record and the assignee. Therefore being no fault on the Patent and Trademark Office, It has no authority to issue a certificate of correction under the provision of 1.322.

In view of the forgoing, your request in this matter, is hereby denied.

Future written correspondence concerning this matter should be filed and directed to Decisions & Certificates of Correction Branch.

Henry Randall
Cecelia Newman
Decisions & Certificates
of Correction Branch
(703) 308-9390 Ext. 108

Sharon E. Crane Esq.
Bingham McCutchen LLP
2020 K STREET NW
WASHINGTON, DC 20006-1806

HR/CBN

SCAN! **Please forward case and paper to address shown below.**

SPE RESPONSE FOR CERTIFICATE OF CORRECTION

Paper No.: _____

DATE : 1/28/08

TO SPE OF : ART UNIT 1648 Bruce Campbell

SUBJECT : Request for Certificate of Correction for Appl. No.: 10/618779 Patent No.: 7264957

Please respond to this request for a certificate of correction within 7 days.

Please review the requested changes/corrections as shown in the attached certificate of correction. Please complete this form (see below) and forward it with the file to:

Certificates of Correction Branch (CofC)
South Tower - 9A22
Palm Location 7580

HENRY RANDALL
Certificates of Correction Branch
703-308-9390 ext. _____

Thank You For Your Assistance

The request for issuing the above-identified correction(s) is hereby:

Note your decision on the appropriate box.

- ☒ Approved — All changes apply.
- ☐ Approved in Part — Specify below which changes do not apply.
- ☐ Denied — State the reasons for denial below.

Comments: _____

BRUCE R. CAMPELL, PH.D
SUPERVISORY PATENT EXAMINER
TECHNOLOGY CENTER 1600

Bruce Campbell
SPE

1648
Art Unit

UNITED STATES PATENT AND TRADEMARK OFFICE

Commissioner for Patents
United States Patent and Trademark Office
P.O. Box 1450
Alexandria, VA 22313-1450
www.uspto.gov

3/7/08

Patent No. :7264957
Ser. No. : 10618779
Inventor(s) :Prem S. Paul et al.
Issued : 9/4/07
Title : POLYNUCLEIC ACIDS ISOLATED FROM A PORCINE REPRODUCTIVE AND RESPIRATORY SYNDROME VIRUS PRRSV, PROTEIN ENCODED BY THE POLYNUCLEIC ACIDS, VACCINES BASED ON THE PROTEINS AND A METHOD OF PROTECTING A PIG FROM PRRSV AND A METHOD OF DEFECTING/OR POLYNUCLEIC ACIDS, A METHOD OF PROTECTING A PIG FROM A PRRSV AND A METHOD OF DETECTING A PRRSV
Docket No. :

Re: Request for Certificate of Correction

Consideration has been given your request for the issuance of a certificate of correction for the above-identified patent under the provisions of Rule(s) 1.322 and/or 1.323.

Assignees' names and addresses (assignment data) printed in a patent, are based *solely* on information supplied in the appropriate space for identifying the assignment data, i.e., item 3 of the Issue Fee Transmittal Form PTOL-85B. Granting of a request under 37 CFR 3.81(b) is required to correct applicant's error providing ***incorrect or erroneous*** assignment data, *before* issuance of a Certificate of Correction, under 37 CFR 1.323 *(see Manual of Patent Examining Procedures (M.P.E.P) Chp.1400, sect. 1481).* This procedure is required *at any time after the issue fee is paid*, including after issuance of the patent.

In view of the foregoing, your request, in this mater, is hereby denied.

A request to correct the Assignee under 37 CFR 3.81(b) should include:

A. **the processing fee set forth in 37 CFR 1.117(h) (currently $130);**
B. a statement that the failure to include the correct assignee name on the PTOL-85B was inadvertent; and
C. a copy of the Notice of Recordation of Assignment Document, reflecting the reel and frame number where the assignment(s) is recorded and/or reflecting proof of *the date* the assignment was submitted for recordation.

In the Request, Applicant(s) may request that the file be forwarded to Certificates of Correction Branch, for issuance of a Certificate of Correction, if the Request is granted.

Any request under 37 CFR 3.81(b) should be directed to the following address or facsimile number:

By mail: Mail Stop PETITIONS

Commissioner for Patents
Post Office Box 1450
Alexandria, VA 22313-1450

By hand: Customer Service Window
Mail Stop Petitions
Randolph Building
401 Dulany Street
Alexandria, VA 22314

By fax: (703) 872-9306
ATTN: Office of Petitions

If a fee (currently $100) was previously submitted for consideration of a Request for Certificate of Correction, under CFR 1.323, to correct assignment data, , no additional fee is required.

A certificate of correction will be issued to correct the remaining errors noted in your request.

Henry Randall
For Cecelia Newman
Decisions & Certificates
of Correction Branch
(703) 308-9390 Ext. 108

Sharon E. Crane Esq.
Bingham McCutchen LLP
2020 K STREET NW
WASHINGTON, DC 20006-1806

HR

UNITED STATES PATENT AND TRADEMARK OFFICE

Commissioner for Patents
United States Patent and Trademark Office
Washington, D.C. 20231
www.uspto.gov

DAVID M. CARTER
CARTER, DELUCA, FARRELL & SCHMIDT, LLP
SUITE 225
445 BROAD HOLLOW ROAD
MELVILLE, NY 11747

COPY MAILED

JUL 26 2006

OFFICE OF PETITIONS

In re Application of :
Robert M. Landis :
Application No. 10/618,799 : ON PETITION
Filed: July 14, 2003 :
Attorney Docket No. 991-8 :

This is a decision on the petition filed April 5, 2006, to withdraw the holding of abandonment , which is treated under 37 CFR 1.181(b), in accordance with the reasoning of the decision in Delgar Inc. v. Schuyler, 172 USPQ 513.

The petition is **GRANTED**.

This application became abandoned for failure to pay the issue fee on or before February 3, 2006 as was required by the Notice of Allowance mailed November 3, 2005. This application therefore became abandoned on February 6, 2006. Accordingly, a Notice of Abandonment was mailed March 28, 2006.

The file record discloses that the Notice of Allowance was mailed to the address of record. However, petitioner contends that it was not received. In support, petitioner indicates that a search of the file jacket revealed that the Notice was not received and submits copies of pages from the docketing system, wherein receipt of the Notice of Allowance would have been entered, had it been received to substantiate the claim. The statement and attachments corroborate non-receipt of the Notice of Allowance.

In view of the facts set forth in the petition, it is concluded that the Notice of Allowance was never received. Accordingly, the holding of abandonment is withdrawn. No petition fee is due and none will be charged.

This application is being forwarded to the Technology Center 3743 for a remailing of the Notice of Allowance and Notice of Allowability.

Telephone inquiries concerning this matter should be directed to the undersigned Petitions Attorney at (571) 272-3212.

Patricia Faison-Ball

Patricia Faison-Ball
Senior Petitions Attorney
Office of Petitions

UNITED STATES PATENT AND TRADEMARK OFFICE

UNITED STATES DEPARTMENT OF COMMERCE
United States Patent and Trademark Office
Address: COMMISSIONER FOR PATENTS
P.O. Box 1450
Alexandria, Virginia 22313-1450
www.uspto.gov

MHKKG/Oracle (Sun)
P.O. BOX 398
AUSTIN, TX 78767

Mail Date: 04/20/2010

Applicant	: Ajay Kumar	: DECISION ON REQUEST FOR
Patent Number	: 7640545	: RECALCULATION of PATENT
Issue Date	: 12/29/2009	: TERM ADJUSTMENT IN VIEW
Appliction No	: 10/618,828	: OF WYETH AND NOTICE OF INTENT TO
Filed	: 07/14/2003	: ISSUE CERTIFICATE OF CORRECTION
		:

The Request for Recalculation is **GRANTED** to the extent indicated.

The patent term adjustment has been determined to be **1931** days. The USPTO will *sua sponte* issue a certificate of correction reflecting the amount of PTA days determined by the recalculation.

Prior to the issuance of the certificate of correction, the USPTO will afford patentee an opportunity to be heard and request reconsideration. Accordingly, patentee has **one month or thirty (30) days**, whichever is longer, to file a request for reconsideration of this patent term adjustment calculation. See 35 U.S.C. 154(b)(3)(B)(ii) and 37 CFR 1.322(a)(4). No extensions of time will be granted under 37 CFR 1.136.

Patentee should use document code PET.OP if electronically filing a request for reconsideration of this patent term adjustment calculation. The patentee must also include the information required by 37 CFR 1.705(b)(2) and the fee required by 37 CFR 1.18(e). If patentee does not file a timely request for reconsideration of this patent term adjustment calculation including the information required by 37 CFR 1.705(b)(2) and the fee required by 37 CFR 1.18(e), the USPTO will issue a certificate of correction reflecting the PTA determination noted above.

Patentee should be aware that in order to preserve the right to review in the United States District Court for the District of Columbia of the USPTO patent term adjustment determination, patentee must ensure that he or she also take the steps required under 35 U.S.C. 154(b)(4)(A) in a timely manner. Nothing in the request for recalculation should be construed as providing an alternative time frame for commencing a civil action under 35 U.S.C. 154(b)(4)(A).

Any questions concerning this decision should be directed to the Office of Patent Legal Administration at 571-272-7702.

UNITED STATES PATENT AND TRADEMARK OFFICE

Commissioner for Patents
United States Patent and Trademark Office
P.O. Box 1450
Alexandria, VA 22313-1450
www.uspto.gov

Fish & Richardson
225 Franklin Street
Boston MA 02110

COPY MAILED

AUG 2 5 2004

OFFICE OF PETITIONS

In re Application of :
Montagu et al. :
Application No. 10/618,838 : DECISION ON PETITION
Filed: July 14, 2003 :
Attorney Docket No. 13165-003001 :

This is a decision on the petition filed July 12, 2004 (certificate of mailing of July 8, 2004), requesting that the above-identified application be accorded a filing date of July 14, 2003, with Figure 10A as part of the original disclosure.

On July 14, 2003, applicant filed the above-identified application. On April 8, 2004, the Office of Initial Patent Examination mailed a Notice to File Missing Parts of Nonprovisional Application - Filing Date Granted (Notice), stating, *inter alia*, that the application was accorded a filing date of July 14, 2003; however, Figure 10A appeared to have been omitted upon filing the application.

On July 12, 2004 (certificate of mailing July 8, 2004), applicant submitted the present petition, a request for a one-month extension of time to respond, a declaration, replacement drawings including a drawing figure labeled Fig. 10A, and paid the requisite fees. Applicant stated the drawing as filed, marked 10A, lacked the word "FIG" before it. Applicant further stated that the omission had been corrected in the set of drawings submitted on petition.

It is obvious from the petition that no drawing was actually missing on July 14, 2003. Rather, the drawing of Figure 10A was simply unlabeled as a result of applicant's filing error. However, the Notice of April 8, 2004, was correct in stating that Figure 10A <u>appeared</u> to have been omitted. Therefore, the Notice was proper and will not be withdrawn.

Accordingly, the petition is <u>dismissed</u>.

The $130.00 petition fee will be charged to Deposit Account No. 06-1050 because the present petition was not necessitated by any error on the part of the United States Patent and Trademark Office.

A preliminary amendment adding the proper label to the unlabeled drawing figure should be filed prior to the first action on the merits.

The Office of Initial Patent Examination is directed to accord the application a filing date of July 14, 2003, without Figure 10A, and to review the replacement drawings submitted on petition.

Any inquiries related to this decision should be directed to the undersigned at (703) 306-5589.

Christina Tartera Donnell

Christina Tartera Donnell
Senior Petitions Attorney
Office of Petitions

UNITED STATES PATENT AND TRADEMARK OFFICE

Commissioner for Patents
United States Patent and Trademark Office
P.O. Box 1450
Alexandria, VA 22313-1450
www.uspto.gov

TAYLOR RUSSELL & RUSSELL, P.C.
4807 SPICEWOOD SPRINGS ROAD
BUILDING TWO SUITE 250
AUSTIN TX 78759

COPY MAILED

JUL 30 2007

OFFICE OF PETITIONS

In re Application of	:	
John R. Ripley et al	:	
Application No. 10/618,840	:	DECISION GRANTING PETITION
Filed: July 14, 2003	:	UNDER 37 CFR 1.137(b)
Attorney Docket No. 800682	:	

This is a decision on the petition under 37 CFR 1.137(b), filed March 9, 2007, to revive the above-identified application.

The petition is **GRANTED**.

The petition satisfies the conditions for revival pursuant to the provisions of 37 CFR 1.137(b) in that (1) the reply in the form of an amendment; (2) the petition fee; and (3) the required statement of unintentional delay have been received. Accordingly, the reply to the Nonfinal Rejection of March 29, 2006, is accepted as having been unintentionally delayed.

Telephone inquiries concerning this decision should be directed to the undersigned at (571) 272-3208.

This matter is being referred to Technology Center AU 2166.

Karen Creasy

Karen Creasy
Petitions Examiner
Office of Petitions

UNITED STATES PATENT AND TRADEMARK OFFICE

Commissioner for Patents
United States Patent and Trademark Office
P.O. Box 1450
Alexandria, VA 22313-1450
www.uspto.gov

HARNESS, DICKEY & PIERCE, P.L.C.
P.O. BOX 828
BLOOMFIELD HILLS MI 48303

COPY MAILED

JUL 2 0 2004

OFFICE OF PETITIONS

In re Application of
Hendriks et al.
Application No.10/618,844
Filed: July 14, 2003
Attorney Docket Number: 7016S-000005
Title: Roll-Up Conveyor For A Sod Harvester

DECISION

This is in response to the petition under 37 CFR 1.47(a), filed May 10, 2004.

In view of the joinder of the inventor, further consideration under 37 CFR 1.47(a) is not necessary and the petition is considered to be **Dismissed As Moot** . This application does not have any Rule 1.47(a) status and no such status should appear on the file wrapper. This application need not be returned to this Office for further consideration under 37 CFR 1.47(a).

Since the 37 CFR 1.47 petition was submitted on the same day as the joinder, the petition fee in the amount of $130.00 is being refunded to deposit account 08-0750.

This application will be forwarded to the Office of Initial Patent Examination for further processing.

Telephone inquiries related to this decision may be directed to the undersigned at (703) 306-0251.

Charlema R. Grant

Charlema R. Grant
Petitions Attorney
Office of Petitions

UNITED STATES PATENT AND TRADEMARK OFFICE

Commissioner for Patents
United States Patent and Trademark Office
P.O. Box 1450
Alexandria, VA 22313-1450
www.uspto.gov

TEXAS INSTRUMENTS INCORPORATED
P O BOX 655474, M/S 3999
DALLAS TX 75265

COPY MAILED

AUG 1 0 2007

OFFICE OF PETITIONS

In re Application of	:	
Eric Balard et al	:	
Application No. 10/618,861	:	DECISION ON PETITION
Filed: July 14, 2003	:	
Attorney Docket No. TI-34921	:	

This is a decision on the petition under 37 CFR 1.137(b), filed December 12, 2006, to revive the above-identified application.

The petition is **GRANTED.**

A Notice of Abandonment has not been mailed in this application. However, this application became abandoned by operation of law for failure to reply in a timely manner to the non-final Office action mailed, April 10, 2006, which set a shortened statutory period for reply of three (3) months. No extensions of time were obtained under the provisions of 37 CFR 1.136(a). Accordingly, the application became abandoned on July 11, 2006.

The petition satisfies the requirements of 37 CFR 1.137(b) in that petitioner has supplied (1) a reply, (2) the petition fee of $1,500, and (3) a proper statement of unintentional delay. Accordingly, the failure to timely reply to the non-final Office action of April 10, 2006 is accepted as being unintentionally delayed.

This application is being referred to Technology Center AU 2132 for appropriate action in the normal course of business on the reply received December 12, 2006.

Telephone inquiries concerning this decision should be directed to the undersigned at (571) 272-3218.

Frances Hicks

Frances Hicks
Petitions Examiner
Office of Petitions

UNITED STATES PATENT AND TRADEMARK OFFICE

UNITED STATES DEPARTMENT OF COMMERCE
United States Patent and Trademark Office
Address: COMMISSIONER FOR PATENTS
P.O. Box 1450
Alexandria, Virginia 22313-1450
www.uspto.gov

APPLICATION NO.	FILING DATE	FIRST NAMED INVENTOR	ATTORNEY DOCKET NO.	CONFIRMATION NO.
10/618,873	07/14/2003	Jerome Azema	TI-34922	8044

23494 7590 05/21/2010
TEXAS INSTRUMENTS INCORPORATED
P O BOX 655474, M/S 3999
DALLAS, TX 75265

EXAMINER
GERGISO, TECHANE

ART UNIT	PAPER NUMBER
2437	

NOTIFICATION DATE	DELIVERY MODE
05/21/2010	ELECTRONIC

Please find below and/or attached an Office communication concerning this application or proceeding.

The time period for reply, if any, is set in the attached communication.

Notice of the Office communication was sent electronically on above-indicated "Notification Date" to the following e-mail address(es):

uspto@ti.com

UNITED STATES PATENT AND TRADEMARK OFFICE

COMMISSIONER FOR PATENTS
UNITED STATES PATENT AND TRADEMARK OFFICE
WASHINGTON, D.C. 20231
www.uspto.gov

Ronald Neerings
Texas Instruments Incorporated
P. O. Box 655474, M/S 3999
Dallas TX 75265

In re Application of: Azema, et al. Application No. 10/618873 Attorney Docket No. TI-34922 Filed: July 14, 2003 For: Secure Management of Configuration Parameters in a Computing Platform	)))))	**DECISION ON PETITION TO WITHDRAW RESTRICTION REQUIREMENT UNDER 37 CFR §1.144**

This is a decision on the petition filed September 2, 2009 under 37 C.F.R. §1.144 and 37 C.F.R. §1.181 to withdraw an outstanding restriction requirement.

The petition is **Granted**.

RELEVANT PROSECUTION HISTORY

April 10, 2009	A restriction requirement of subcombinations useable together into 8 different groups was mailed out.
April 13, 2009	A provisional election with traverse was made to Group 1 and arguments were made about burden on the examiner were made as all of the claims had already been examined numerous times.
June 11, 2009	The restriction was made final as the arguments for no burden were not found persuasive.

REGULATIONS AND PRACTICE

37 C.F.R. § 1.143 states:

> If the applicant disagrees with the requirement for restriction, he may request reconsideration and withdrawal or modification of the requirement, giving the reasons therefor. (See § 1.111). In requesting reconsideration the applicant must indicate a provisional election of one invention for prosecution, which invention shall be the one elected in the event the requirement becomes final. The requirement for restriction will be reconsidered on such a request. If the requirement is repeated and made final, the

examiner will at the same time act on the claims to the invention elected.

37 C.F.R. § 1.144 states:

> After a final requirement for restriction, the applicant, in addition to making any reply due on the remainder of the action, may petition the Commissioner to review the requirement ... A petition will not be considered if reconsideration of the requirement was not requested (see § 1.181).

37 C.F.R. § 1.145 states:

> If, after an office action on an application, the applicant presents claims directed to an invention distinct from and independent of the invention previously claimed, the applicant will be required to restrict the claims to the invention previously claimed if the amendment is entered, subject to reconsideration and review as provided in § § 1.143 and 1.144.

37 C.F.R. § 1.181 states:

> (a) Petition may be taken to the Commissioner:
> (1) From any action or requirement of any examiner in the ex parte prosecution of an application, or in ex parte or inter partes prosecution of a reexamination proceeding which is not subject to appeal to the Board of Patent Appeals and Interferences or to the court;
> (2) In cases in which a statute or the rules specify that the matter is to be determined directly by or reviewed by the Commissioner; and
> (3) To invoke the supervisory authority of the Commissioner in appropriate circumstances. For petitions in interferences, see § 1.644.
> (b) Any such petition must contain a statement of the facts involved and the point or points to be reviewed and the action requested. Briefs or memoranda, if any, in support thereof should accompany or be embodied in the petition; and where facts are to be proven, the proof in the form of affidavits or declarations (and exhibits, if any) must accompany the petition.
> (c) When a petition is taken from an action or requirement of an examiner in the ex parte prosecution of an application, or in the ex parte or inter partes prosecution of a reexamination proceeding, it may be required that there have been a proper request for reconsideration (§ 1.111) and a repeated action by the examiner. The examiner may be directed by the Commissioner to furnish a written statement, within a specified time, setting forth the reasons for his or her decision upon the matters averred in the petition, supplying a copy to the petitioner.

MPEP § 803 states:

> Under the statute an application may properly be required to be restricted to one of two or more claimed inventions only if they are able to support separate patents and they are either independent (MPEP § 806.04 - § 806.04(i)) or distinct (MPEP § 806.05 - § 806.05(i)).
> If the search and examination of an entire application can be made without serious burden, the examiner must examine it on the merits, even though it includes claims to independent or distinct inventions.
>
> CRITERIA FOR RESTRICTION BETWEEN PATENTABLY DISTINCT INVENTIONS
> There are two criteria for a proper requirement for restriction between patentably distinct inventions:
> (A) The inventions must be independent (see MPEP § 802.01, § 806.04, § 808.01) or distinct as claimed (see MPEP § 806.05 - § 806.05(i)); and
> (B) There must be a serious burden on the examiner if restriction is required (see MPEP § 803.02, § 806.04(a) - § 806.04(i), § 808.01(a), and § 808.02).... For purposes of the initial requirement, a serious burden on the examiner may be *prima facie* shown if the examiner shows by appropriate explanation of separate classification, or separate status in the art, or a different field of search as defined in MPEP § 808.02....

MPEP § 821.01 states:

> Where the initial requirement is traversed, it should be reconsidered. If, upon reconsideration, the examiner is still of the opinion that restriction is proper, it should be repeated and made final in the next Office action. (See MPEP § 803.01.) In doing so, the examiner should reply to the reasons or arguments advanced by applicant in the traverse. Form paragraph 8.25 should be used to make a restriction requirement final.

DECISION

37 C.F.R. § 1.181(c) requires that an action by an examiner, to be properly petitionable, must be followed by a request for reconsideration, and a repeated action by the examiner. 37 C.F.R. § 1.144 states that the applicant may petition the Commissioner after a final requirement for the restriction has been made.

In the above-identified application, applicant filed several requests for reconsideration prior to the petition.

The issue presented in the petition is whether the restriction based on original presentation under 37 C.F.R. § 1.145 is proper under the current regulations and practice.

MPEP § 803 sets forth two criteria for a proper restriction requirement between patentably distinct inventions: (A) the inventions must be independent or distinct as claimed and (B) there must be a serious burden on the examiner.

A review of the record indicates that no serious burden is placed on the examiner as all of the claims have been repeatedly been searched and examined already, therefore, the restriction is improper.

For the above reasons, the petition is **GRANTED**.

The restriction requirement is hereby **WITHDRAWN**.

The application will be forwarded to the examiner for consideration on the merits of claims 1-3, 5-8, 10-14, 16-19 and 21-31.

/Tod Swann/
Tod Swann
Special Programs Examiner
Technology Center 2400

UNITED STATES PATENT AND TRADEMARK OFFICE

Commissioner for Patents
United States Patent and Trademark Office
P.O. Box 1450
Alexandria, VA 22313-1450
www.uspto.gov

COPY MAILED
APR 21 2006
OFFICE OF PETITIONS

TEXAS INSTRUMENTS INCORPORATED
P.O. BOX 655474, M/S 3999
DALLAS, TX 75265

In re Application of :
Mukul Saran :
Application No. 10/618,874 :
Filed: July 14, 2003 :
Attorney Docket No. TI-30597.1 :

ON PETITION

This is a decision on the petition under 37 CFR 1.181, filed March 20, 2006, to withdraw the holding of abandonment.

The petition is **granted**.

This application became abandoned for failure to timely file a proper reply to the final Office action mailed June 20, 2005. Accordingly, this application became abandoned on September 20, 2005. A Notice of Abandonment was mailed on March 9, 2006.

Petitioner asserts that a response was timely submitted on October 3, 2005. In support, petitioner has submitted a stamped postcard receipt that indicates a "RCE and Response" was received by the USPTO on October 3, 2005. A review of the application file confirms a RCE and response were submitted on October 3, 2005. It is noted that the RCE requests that an extension of time fee be charged to applicant's deposit account.

Accordingly, the petition is granted and the holding of abandonment is withdrawn.

This application is being forwarded to Technology Center 2800 for review of the RCE and response, *in due course*.

Telephone inquiries concerning this matter may be directed to the undersigned at (571) 272-3228.

Edward J. Tannouse
Petitions Attorney
Office of Petitions
Office of the Deputy Commissioner
for Patent Examination Policy

UNITED STATES PATENT AND TRADEMARK OFFICE

UNITED STATES DEPARTMENT OF COMMERCE
United States Patent and Trademark Office
Address: COMMISSIONER FOR PATENTS
P.O. Box 1450
Alexandria, Virginia 22313-1450
www.uspto.gov

QUARLES & BRADY LLP
411 E. WISCONSIN AVENUE, SUITE 2040
MILWAUKEE, WI 53202-4497

Mail Date: 04/20/2010

Applicant	: Paul G. Ahlquist	: DECISION ON REQUEST FOR
Patent Number	: 7611833	: RECALCULATION of PATENT
Issue Date	: 11/03/2009	: TERM ADJUSTMENT IN VIEW
Appliction No	: 10/618,896	: OF WYETH AND NOTICE OF INTENT TO
Filed	: 07/14/2003	: ISSUE CERTIFICATE OF CORRECTION
		:

The Request for Recalculation is **GRANTED** to the extent indicated.

The patent term adjustment has been determined to be **1292** days. The USPTO will *sua sponte* issue a certificate of correction reflecting the amount of PTA days determined by the recalculation.

Prior to the issuance of the certificate of correction, the USPTO will afford patentee an opportunity to be heard and request reconsideration. Accordingly, patentee has **one month or thirty (30) days**, whichever is longer, to file a request for reconsideration of this patent term adjustment calculation. See 35 U.S.C. 154(b)(3)(B)(ii) and 37 CFR 1.322(a)(4). No extensions of time will be granted under 37 CFR 1.136.

Patentee should use document code PET.OP if electronically filing a request for reconsideration of this patent term adjustment calculation. The patentee must also include the information required by 37 CFR 1.705(b)(2) and the fee required by 37 CFR 1.18(e). If patentee does not file a timely request for reconsideration of this patent term adjustment calculation including the information required by 37 CFR 1.705(b)(2) and the fee required by 37 CFR 1.18(e), the USPTO will issue a certificate of correction reflecting the PTA determination noted above.

Patentee should be aware that in order to preserve the right to review in the United States District Court for the District of Columbia of the USPTO patent term adjustment determination, patentee must ensure that he or she also take the steps required under 35 U.S.C. 154(b)(4)(A) in a timely manner. Nothing in the request for recalculation should be construed as providing an alternative time frame for commencing a civil action under 35 U.S.C. 154(b)(4)(A).

Any questions concerning this decision should be directed to the Office of Patent Legal Administration at 571-272-7702.

UNITED STATES PATENT AND TRADEMARK OFFICE

UNITED STATES DEPARTMENT OF COMMERCE
United States Patent and Trademark Office
Address: COMMISSIONER FOR PATENTS
P.O. Box 1450
Alexandria, Virginia 22313-1450
www.uspto.gov

MILLER PATENT SERVICES
2500 DOCKERY LANE
RALEIGH, NC 27606

Mail Date: 04/21/2010

Applicant	: Damien Kessler	: DECISION ON REQUEST FOR
Patent Number	: 7594253	: RECALCULATION of PATENT
Issue Date	: 09/22/2009	: TERM ADJUSTMENT IN VIEW
Appliction No	: 10/618,916	: OF WYETH AND NOTICE OF INTENT TO
Filed	: 07/14/2003	: ISSUE CERTIFICATE OF CORRECTION
		:

The Request for Recalculation is **GRANTED** to the extent indicated.

The patent term adjustment has been determined to be **1373** days. The USPTO will *sua sponte* issue a certificate of correction reflecting the amount of PTA days determined by the recalculation.

Prior to the issuance of the certificate of correction, the USPTO will afford patentee an opportunity to be heard and request reconsideration. Accordingly, patentee has **one month or thirty (30) days**, whichever is longer, to file a request for reconsideration of this patent term adjustment calculation. See 35 U.S.C. 154(b)(3)(B)(ii) and 37 CFR 1.322(a)(4). No extensions of time will be granted under 37 CFR 1.136.

Patentee should use document code PET.OP if electronically filing a request for reconsideration of this patent term adjustment calculation. The patentee must also include the information required by 37 CFR 1.705(b)(2) and the fee required by 37 CFR 1.18(e). If patentee does not file a timely request for reconsideration of this patent term adjustment calculation including the information required by 37 CFR 1.705(b)(2) and the fee required by 37 CFR 1.18(e), the USPTO will issue a certificate of correction reflecting the PTA determination noted above.

Patentee should be aware that in order to preserve the right to review in the United States District Court for the District of Columbia of the USPTO patent term adjustment determination, patentee must ensure that he or she also take the steps required under 35 U.S.C. 154(b)(4)(A) in a timely manner. Nothing in the request for recalculation should be construed as providing an alternative time frame for commencing a civil action under 35 U.S.C. 154(b)(4)(A).

Any questions concerning this decision should be directed to the Office of Patent Legal Administration at 571-272-7702.

UNITED STATES PATENT AND TRADEMARK OFFICE

COMMISSIONER FOR PATENTS
UNITED STATES PATENT AND TRADEMARK OFFICE
P.O. BOX 1450
ALEXANDRIA, VA 22313-1450
www.uspto.gov

ALAN A. CSONTOS
MICHELIN NORTH AMERICA, INC.
P.O. BOX 2026
GREENVILLE, SC 29602

COPY MAILED

JUN 27 2005

OFFICE OF PETITIONS

In re Application of :
Timothy B. Rhyne, et al :
Application No. 10/618,924 :
Filed: July 14, 2003 :
Attorney Docket No. P50-0111 :

ON PETITION

This is a decision on the petition, filed April 28, 2005, to revive the above-identified application under the provisions of 37 CFR 1.137(b).

There is no indication that the person signing the instant petition was ever given a power of attorney or authorization of agent to prosecute the above-identified application. However, in accordance with 37 CFR 1.34(a), the signature of Tim F. Williams appearing on the petition shall constitute a representation to the United States Patent and Trademark Office that he is authorized to represent the particular party on whose behalf he acts. A courtesy copy of this decision is being mailed to petitioner. However, if Mr. Williams desires to receive future correspondence regarding this application, the appropriate power of attorney or authorization of agent must be submitted. All future correspondence regarding this application file will be directed solely to the address of record.

The above-identified application became abandoned for failure to reply in a timely manner to the non-final Office action mailed August 12, 2004. A Notice of Abandonment was mailed on March 24, 2005. In response, on April 28, 2005, the present petition was filed.

37 CFR 1.137(b)(3) requires a statement that the entire delay in filing the required reply from the due date for the reply until the filing of a grantable petition pursuant to 37 CFR 1.137(b) was unintentional. While it is not apparent whether the person signing the statement of unintentional delay was in a position to have firsthand or direct knowledge of the facts and circumstances of the delay at issue, such statement is being treated as having been made as the result of a reasonable inquiry into the facts and circumstances of such delay. See 37 CFR 10.18(b) and Changes to Patent Practice and Procedure; Final Rule Notice, 62 Fed. Reg. 53131, 53178 (October 10, 1997), 1203 Off. Gaz. Pat. Office 63, 103 (October 21, 1997). In the event that such an inquiry has not been made, petitioner must make such an inquiry. If such inquiry results in the discovery that it is not correct that the entire delay in filing the required reply from the due date for the reply until the filing of a grantable petition pursuant to 37 CFR 1.137(b) was unintentional, petitioner must notify the Office.

The petition is **GRANTED**.

Telephone inquiries concerning this decision may be directed to the undersigned at (571) 272-3204. All other inquiries regarding this application should be directed to the Technology Center.

The application is being referred to Technology Center AU 3617 for consideration of the amendment filed April 28, 2005.

Sherry D. Brinkley
Petitions Examiner
Office of Petitions
Office of the Deputy Commissioner
for Patent Examination Policy

cc: Tim F. Williams
Dority & Manning, P.A.
P. O. Box 1449
Greenville, SC 29602-1449

UNITED STATES PATENT AND TRADEMARK OFFICE

Commissioner for Patents
United States Patent and Trademark Office
P.O. Box 1450
Alexandria, VA 22313-1450
www.uspto.gov

COPY MAILED

AUG 2 0 2007

OFFICE OF PETITIONS

OPPENHEIMER WOLFF & DONNELLY LLP
45 SOUTH SEVENTH STREET, SUITE 3300
MINNEAPOLIS MN 55402

In re Application of :

Alon Atsmon et al. :
Application No. 10/618,962 : DECISION ON PETITION
Filed: July 14, 2003 : TO WITHDRAW
Attorney Docket No. 20257/312 : FROM RECORD

This is a decision on the Request to Withdraw as attorney or agent of record under 37 C.F.R. § 1.36(b), filed April 6, 2007.

The request is **NOT APPROVED**.

A grantable request to withdraw as attorney/agent of record must be signed by every attorney/agent seeking to withdraw or contain a clear indication that one attorney is signing on behalf of another/others. A request to withdraw will not be approved unless at least 30 (thirty) days would remain between the date of approval and the later of the expiration date of a time to file a response or the expiration date of the maximum time period which can be extended under 37 C.F.R. § 1.136(a).

The Office cannot approve the request at this time since the reasons provided do not meet any of the conditions under the mandatory or permissive categories enumerated in 37 CFR 10.40. Section 10.40 of Title 37 of the Code of Federal Regulation states, "[a] practitioner shall not withdraw from employment in a proceeding before the Office without permission from the Office[.]" More specifically, 37 CFR 10.40 states, "[i]f paragraph (b) of this section is not applicable, a practitioner may not request permission to withdraw in matter pending before the Office unless such request or such withdrawal is" for one the permissive reasons listed in 37 CFR 10.40(c). The reasons set forth in the request, ***transfer pf client's files, including this application***, do not meet any the conditions set forth in 37 CFR 10.40.

All future communications from the Office will continue to be directed to the above-listed address until otherwise notified by applicant.

Telephone inquiries concerning this decision should be directed to Terri Williams at 571-272- 2991.

T. Williams
Terri Williams
Petitions Examiner
Office of Petitions

cc: **Meltal Krupik, Adv Patent Assistant, Fenster & Company**
P.O. Box 10256
Petach Tikva 49002
Israel

UNITED STATES PATENT AND TRADEMARK OFFICE

COMMISSIONER FOR PATENTS
UNITED STATES PATENT AND TRADEMARK OFFICE
P.O. BOX 1450
ALEXANDRIA, VA 22313-1450
www.uspto.gov

JUL 23 2004

In re Application of	:	
Marvin LaCoste	:	
Serial No. 10/618,989	:	DECISION ON PETITION
Filed: July 14, 2003	:	TO MAKE SPECIAL
For: REFRIGERANT COPPER LINE	:	
PROTECTOR	:	

Applicant's petition, filed July 7, 2004, requests that this application be rendered special for examination in that applicant is over sixty-five (65) years of age.

The petition has been reviewed and is found to be in compliance with the requirements for special status as set forth in Section 708.02(IV) of the Manual of Patent Examining Procedure (MPEP).

PETITION GRANTED.

E. Rollins-Cross, Director
Technology Center 3700

Garvey, Smith, Nehrbass & Doody, LLC
3838 N. Causeway Blvd., Suite 3290
Metairie, LA 70002

UNITED STATES PATENT AND TRADEMARK OFFICE

UNITED STATES DEPARTMENT OF COMMERCE
United States Patent and Trademark Office
Address: COMMISSIONER FOR PATENTS
P.O. Box 1450
Alexandria, Virginia 22313-1450
www.uspto.gov

Tyco Healthcare Group LP
60 MIDDLETOWN AVENUE
NORTH HAVEN, CT 06473

Mail Date: 04/21/2010

Applicant	: Scott Cunningham	: DECISION ON REQUEST FOR
Patent Number	: 7655024	: RECALCULATION of PATENT
Issue Date	: 02/02/2010	: TERM ADJUSTMENT IN VIEW
Appliction No	: 10/618,994	: OF WYETH AND NOTICE OF INTENT TO
Filed	: 07/14/2003	: ISSUE CERTIFICATE OF CORRECTION
		:

The Request for Recalculation is **GRANTED** to the extent indicated.

The patent term adjustment has been determined to be **973** days. The USPTO will *sua sponte* issue a certificate of correction reflecting the amount of PTA days determined by the recalculation.

Prior to the issuance of the certificate of correction, the USPTO will afford patentee an opportunity to be heard and request reconsideration. Accordingly, patentee has **one month or thirty (30) days**, whichever is longer, to file a request for reconsideration of this patent term adjustment calculation. See 35 U.S.C. 154(b)(3)(B)(ii) and 37 CFR 1.322(a)(4). No extensions of time will be granted under 37 CFR 1.136.

Patentee should use document code PET.OP if electronically filing a request for reconsideration of this patent term adjustment calculation. The patentee must also include the information required by 37 CFR 1.705(b)(2) and the fee required by 37 CFR 1.18(e). If patentee does not file a timely request for reconsideration of this patent term adjustment calculation including the information required by 37 CFR 1.705(b)(2) and the fee required by 37 CFR 1.18(e), the USPTO will issue a certificate of correction reflecting the PTA determination noted above.

Patentee should be aware that in order to preserve the right to review in the United States District Court for the District of Columbia of the USPTO patent term adjustment determination, patentee must ensure that he or she also take the steps required under 35 U.S.C. 154(b)(4)(A) in a timely manner. Nothing in the request for recalculation should be construed as providing an alternative time frame for commencing a civil action under 35 U.S.C. 154(b)(4)(A).

Any questions concerning this decision should be directed to the Office of Patent Legal Administration at 571-272-7702.

UNITED STATES PATENT AND TRADEMARK OFFICE

Commissioner for Patents
United States Patent and Trademark Office
P.O. Box 1450
Alexandria, VA 22313-1450
www.uspto.gov

JUN -9 2005

In re Application of: :
Douglas Scheffer :
Application No. 10/619,016 : DECISION ON PETITION
Filed: July 11, 2003 :
For: PIPE BEVELING TOOL AND METHOD:

This is a decision on the petition to make special filed May 10, 2004. The petition is submitted pursuant to the practice established in MPEP §708.02(II) "Infringement." The $130.00 petition fee has been received.

The petition is granted.

A review of the petition shows that petitioner has satisfied all of the requirements of the above cited MPEP section. Accordingly, the examiner will treat this application as special throughout its prosecution. Prior to the first action on the merits, the examiner will conduct a rigorous search for potentially interfering applications. The interference search will be brought up to date prior to each successive action.

The Supervisory Patent Examiner of Patent Examining Art Unit 3722 will be notified of this decision, and will inform the assigned examiner to take action not inconsistent therewith.

PETITION GRANTED.

Richard A. Bertsch

Richard A. Bertsch, Director
Technology Center 3700

Michael F. Hughes
Hughes Law Firms, PLLC
4164 Meridian Street, Suite 302
Bellingham, WA 98226

UNITED STATES PATENT AND TRADEMARK OFFICE

COMMISSIONER FOR PATENTS
UNITED STATES PATENT AND TRADEMARK OFFICE
P.O. BOX 1450
ALEXANDRIA, VA 22313-1450
www.uspto.gov

Denise Robinson
381D Park Ridge Lane
Aurora IL 60504

COPY MAILED
SEP 17 2007
OFFICE OF PETITIONS

In re Application of :
Robinson : DECISION ON PETITION
Application No. 10/619,024 :
Filed: July 14, 2003 :
Atty. Dkt. No.: 23-0267 :

This is a decision on the petition under 37 CFR 1.137(a), filed July 13, 2007, to revive the above-identified application.

The petition is **DISMISSED**.

Any request for reconsideration of this decision must be submitted within **TWO (2) MONTHS** from mail date of this decision. Extensions of time under 37 CFR 1.136(a) are permitted. The reconsideration request should include a cover letter entitled "Renewed Petition under 37 CFR 1.137(a)." This is not a final agency decision.

This application became abandoned July 13, 2006 for failure to timely reply to the Notice mailed April 12, 2006. The Notice set a three month statutory period of time for reply. Notice of Abandonment was mailed September 13, 2006.

A grantable petition under 37 CFR 1.137(a) must be accompanied by: (1) the required reply, unless previously filed; (2) the petition fee as set forth in 37 CFR 1.17(l); (3) a showing to the satisfaction of the Director that the entire delay in filing the required reply from the due date for the reply until the filing of a grantable petition pursuant to 37 CFR 1.137(a) was unavoidable; and (4) any terminal disclaimer (and fee as set forth in 37 CFR 1.20(d)) required pursuant to 37 CFR 1.137(c).

The present petition lacks requirement (3) above. Petitioner has failed to present a showing to the satisfaction of the Director that the entire delay in filing the required reply from the due date for the reply until the filing of a grantable petition pursuant to 37 CFR 1.137(a) was unavoidable.

The Office may revive an abandoned application if the delay in responding to the relevant outstanding Office requirement is

shown to the satisfaction of the Director to have been "unavoidable." See, 37 CFR 1.137(a)(3). Decisions on reviving abandoned applications have adopted the reasonably prudent person standard in determining if the delay was unavoidable. Ex parte Pratt, 1887 Dec. Comm'r Pat. 31, 32-33 (Comm'r Pat. 1887)(the term "unavoidable" "is applicable to ordinary human affairs, and requires no more or greater care or diligence than is generally used and observed by prudent and careful men in relation to their most important business"); In re Mattullath, 38 App. D.C. 497, 514-15 (D.C. Cir. 1912); Ex parte Henrich, 1913 Dec. Comm'r Pat. 139, 141 (Comm'r Pat. 1913). In addition, decisions on revival are made on a "case-by-case basis, taking all the facts and circumstances into account." Smith v. Mossinghoff, 671 F.2d 533, 538, 213 USPQ 977, 982 (D.C. Cir. 1982). A petition to revive an application as unavoidably abandoned cannot be granted where petitioner has failed to meet his or her burden of establishing the cause of the unavoidable delay. Haines v. Quigg, 673 F. Supp. 314, 5 USPQ2d 1130 (N.D. Ind. 1987).

Petitioner would seem to attribute the failure to timely reply to the Notice to miscommunication between applicant and applicant's prior attorney, prior counsel alleged to have never informed applicant of the outstanding Notice.

The Patent and Trademark Office must rely on the actions or inactions of duly authorized and voluntarily chosen representatives of the applicant, and applicant is bound by the consequences of those actions or inactions. Link v. Wabash, 370 U.S. 626, 633-34 (1962). Specifically, applicant's delay caused by mistakes or negligence of a voluntarily chosen representative does not constitute unavoidable delay. Haines v. Quigg, 673 F. Supp. 314, 5 USPQ2d 1130 (N.D. Ind. 1987); Potter v. Dann, 201 USPQ 574 (D.D.C. 1978); Douglas v. Manbeck, 21 USPQ2d (BNA)(1697)(E.D. PA Nov. 7, 1991).

Any renewed petition must be supported by evidence that sufficiently establishes that the entire period of delay in timely responding to the Notice was unavoidable within the meaning of 37 CFR 1.137(a).

ALTERNATE VENUE

Petitioner may wish to consider filing a petition stating that the delay was unintentional. Petitioner's attention is directed

Application No. 10/619,024

to 37 CFR 1.137(b) which provides for the revival of an "unintentionally" abandoned application without a showing that the delay in prosecution or in late payment of an issue fee was "unavoidable." An "unintentional" petition under 37 CFR 1.137(b) must be accompanied by the required petition fee and reply.

The filing of a petition under 37 CFR 1.137(b) cannot be intentionally delayed and therefore must be filed promptly. A person seeking revival due to unintentional delay cannot make a statement that the delay was unintentional unless the entire delay, including the delay from the date it was discovered that the application was abandoned until the filing of the petition to revive under 37 CFR 1.137(b), was unintentional. A statement that the delay was unintentional is not appropriate if petitioner intentionally delayed the filing of a petition for revival under 37 CFR 1.137(b).

Further correspondence with respect to this matter should be addressed as follows:

By mail: **Mail Stop Petition**
Commissioner for Patents
P.O. Box 1450
Alexandria, VA 22313-1450

By facsimile: (571) 273-3205

By hand: U.S. Patent and Trademark Office
Customer Service Window
Mail Stop Petition
Randolph Building
401 Dulany Street
Alexandria, VA 22314

Telephone inquiries concerning this matter may be directed to the undersigned at (571) 272-3205.

Alesia M. Brown
Petitions Attorney
Office of Petitions

Enclosure

PTO/SB/64 (04-07)
Approved for use through 09/30/2007. OMB 0651-0031
U.S. Patent and Trademark Office; U.S. DEPARTMENT OF COMMERCE
Under the Paperwork Reduction Act of 1995, no persons are required to respond to a collection of information unless it displays a valid OMB control number.

PETITION FOR REVIVAL OF AN APPLICATION FOR PATENT ABANDONED UNINTENTIONALLY UNDER 37 CFR 1.137(b)

Docket Number (Optional)

First named inventor:

Application No.: Art Unit:

Filed: Examiner:

Title:

Attention: Office of Petitions
Mail Stop Petition
Commissioner for Patents
P.O. Box 1450
Alexandria, VA 22313-1450
FAX (571) 273-8300

NOTE: If information or assistance is needed in completing this form, please contact Petitions Information at (571) 272-3282.

The above-identified application became abandoned for failure to file a timely and proper reply to a notice or action by the United States Patent and Trademark Office. The date of abandonment is the day after the expiration date of the period set for reply in the office notice or action plus an extensions of time actually obtained.

APPLICANT HEREBY PETITIONS FOR REVIVAL OF THIS APPLICATION

NOTE: A grantable petition requires the following items:
(1) Petition fee;
(2) Reply and/or issue fee;
(3) Terminal disclaimer with disclaimer fee - required for all utility and plant applications filed before June 8, 1995; and for all design applications; and
(4) Statement that the entire delay was unintentional.

1. Petition fee

☐ Small entity-fee $ _____ (37 CFR 1.17(m)). Applicant claims small entity status. See 37 CFR 1.27.

☐ Other than small entity – fee $ _____ (37 CFR 1.17(m))

2. Reply and/or fee

A. The reply and/or fee to the above-noted Office action in the form of _____(identify type of reply):

☐ has been filed previously on _____.
☐ is enclosed herewith.

B. The issue fee and publication fee (if applicable) of $ _____.
☐ has been paid previously on _____.
☐ is enclosed herewith.

This collection of information is required by 37 CFR 1.137(b). The information is required to obtain or retain a benefit by the public which is to file (and by the USPTO to process) an application. Confidentiality is governed by 35 U.S.C. 122 and 37 CFR 1.11 and 1.14. This collection is estimated to take 1.0 hour to complete, including gathering, preparing, and submitting the completed application form to the USPTO. Time will vary depending upon the individual case. Any comments on the amount of time you require to complete this form and/or suggestions for reducing this burden, should be sent to the Chief Information Officer, U.S. Patent and Trademark Office, U.S. Department of Commerce, P.O. Box 1450, Alexandria, VA 22313-1450. DO NOT SEND FEES OR COMPLETED FORMS TO THIS ADDRESS. **SEND TO: Mail Stop Petition, Commissioner for Patents, P.O. Box 1450, Alexandria, VA 22313-1450.**

If you need assistance in completing the form, call 1-800-PTO-9199 and select option 2.

Under the Paperwork Reduction Act of 1995, no persons are required to respond to a collection of information unless it displays a valid OMB control number.

3. Terminal disclaimer with disclaimer fee

☐ Since this utility/plant application was filed on or after June 8, 1995, no terminal disclaimer is required.

☐ A terminal disclaimer (and disclaimer fee (37 CFR 1.20(d)) of $ _____ for a small entity or $ _____ for other than a small entity) disclaiming the required period of time is enclosed herewith (see PTO/SB/63).

4. STATEMENT: The entire delay in filing the required reply from the due date for the required reply until the filing of a grantable petition under 37 CFR 1.137(b) was unintentional. [NOTE: The United States Patent and Trademark Office may require additional information if there is a question as to whether either the abandonment or the delay in filing a petition under 37 CFR 1.137(b) was unintentional (MPEP 711.03(c), subsections (III)(C) and (D)).]

WARNING:

Petitioner/applicant is cautioned to avoid submitting personal information in documents filed in a patent application that may contribute to identity theft. Personal information such as social security numbers, bank account numbers, or credit card numbers (other than a check or credit card authorization form PTO-2038 submitted for payment purposes) is never required by the USPTO to support a petition or an application. If this type of personal information is included in documents submitted to the USPTO, petitioners/applicants should consider redacting such personal information from the documents before submitting them to the USPTO. Petitioner/applicant is advised that the record of a patent application is available to the public after publication of the application (unless a non-publication request in compliance with 37 CFR 1.213(a) is made in the application) or issuance of a patent. Furthermore, the record from an abandoned application may also be available to the public if the application is referenced in a published application or an issued patent (see 37 CFR 1.14). Checks and credit card authorization forms PTO-2038 submitted for payment purposes are not retained in the application file and therefore are not publicly available.

Signature	Date
Typed or printed name	Registration Number, if applicable
Address	Telephone Number
Address	

Enclosures: ☐ Fee Payment

☐ Reply

☐ Terminal Disclaimer Form

☐ Additional sheets containing statements establishing unintentional delay

☐ Other: _____

CERTIFICATE OF MAILING OR TRANSMISSION [37 CFR 1.8(a)]

I hereby certify that this correspondence is being:

☐ Deposited with the United States Postal Service on the date shown below with sufficient postage as first class mail in an envelope addressed to: Mail Stop Petition, Commissioner for Patents, P. O. Box 1450, Alexandria, VA 22313-1450.

☐ Transmitted by facsimile on the date shown below to the United States Patent and Trademark Office at (571) 273-8300.

Date	Signature
	Typed or printed name of person signing certificate

Privacy Act Statement

The **Privacy Act of 1974 (P.L. 93-579)** requires that you be given certain information in connection with your submission of the attached form related to a patent application or patent. Accordingly, pursuant to the requirements of the Act, please be advised that: (1) the general authority for the collection of this information is 35 U.S.C. 2(b)(2); (2) furnishing of the information solicited is voluntary; and (3) the principal purpose for which the information is used by the U.S. Patent and Trademark Office is to process and/or examine your submission related to a patent application or patent. If you do not furnish the requested information, the U.S. Patent and Trademark Office may not be able to process and/or examine your submission, which may result in termination of proceedings or abandonment of the application or expiration of the patent.

The information provided by you in this form will be subject to the following routine uses:

1. The information on this form will be treated confidentially to the extent allowed under the Freedom of Information Act (5 U.S.C. 552) and the Privacy Act (5 U.S.C 552a). Records from this system of records may be disclosed to the Department of Justice to determine whether disclosure of these records is required by the Freedom of Information Act.
2. A record from this system of records may be disclosed, as a routine use, in the course of presenting evidence to a court, magistrate, or administrative tribunal, including disclosures to opposing counsel in the course of settlement negotiations.
3. A record in this system of records may be disclosed, as a routine use, to a Member of Congress submitting a request involving an individual, to whom the record pertains, when the individual has requested assistance from the Member with respect to the subject matter of the record.
4. A record in this system of records may be disclosed, as a routine use, to a contractor of the Agency having need for the information in order to perform a contract. Recipients of information shall be required to comply with the requirements of the Privacy Act of 1974, as amended, pursuant to 5 U.S.C. 552a(m).
5. A record related to an International Application filed under the Patent Cooperation Treaty in this system of records may be disclosed, as a routine use, to the International Bureau of the World Intellectual Property Organization, pursuant to the Patent Cooperation Treaty.
6. A record in this system of records may be disclosed, as a routine use, to another federal agency for purposes of National Security review (35 U.S.C. 181) and for review pursuant to the Atomic Energy Act (42 U.S.C. 218(c)).
7. A record from this system of records may be disclosed, as a routine use, to the Administrator, General Services, or his/her designee, during an inspection of records conducted by GSA as part of that agency's responsibility to recommend improvements in records management practices and programs, under authority of 44 U.S.C. 2904 and 2906. Such disclosure shall be made in accordance with the GSA regulations governing inspection of records for this purpose, and any other relevant (*i.e.*, GSA or Commerce) directive. Such disclosure shall not be used to make determinations about individuals.
8. A record from this system of records may be disclosed, as a routine use, to the public after either publication of the application pursuant to 35 U.S.C. 122(b) or issuance of a patent pursuant to 35 U.S.C. 151. Further, a record may be disclosed, subject to the limitations of 37 CFR 1.14, as a routine use, to the public if the record was filed in an application which became abandoned or in which the proceedings were terminated and which application is referenced by either a published application, an application open to public inspection or an issued patent.
9. A record from this system of records may be disclosed, as a routine use, to a Federal, State, or local law enforcement agency, if the USPTO becomes aware of a violation or potential violation of law or regulation.

UNITED STATES PATENT AND TRADEMARK OFFICE

Commissioner for Patents
United States Patent and Trademark Office
P.O. Box 1450
Alexandria, VA 22313-1450
www.uspto.gov

COPY MAILED

DEC 14 2007

OFFICE OF PETITIONS

Denise Robinson
381D Park Ridge Lane
Aurora IL 60504

In re Application of	:	
Robinson	:	
Application No. 10/619,024	:	DECISION ON PETITION
Filed: July 14, 2003	:	
Attorney Docket No.: 23-0267	:	

This is a decision on the petition under the unintentional provisions of 37 CFR 1.137(b), filed November 16, 2007, to revive the above-identified application.

The petition is GRANTED.

This application became abandoned July 13, 2006 for failure to timely submit a proper reply to the Notice of Allowance mailed April 12, 2006. The Notice set a three month statutory period of time for reply. Notice of Abandonment was mailed September 13, 2007.

The petition satisfies the requirements of 37 CFR 1.137(b) in that petitioner has supplied: (1) the reply in the form of the issue fee payment, (2) the required petition fee, and (3) a statement of unintentional delay.

Telephone inquiries concerning this decision should be directed to the undersigned at (571) 272-3205.

This application is being referred to the Office of Patent Publications for further processing.

Alesia M. Brown
Petitions Attorney
Office of Petitions

UNITED STATES PATENT AND TRADEMARK OFFICE

Commissioner for Patents
United States Patent and Trademark Office
P.O. Box 1450
Alexandria, VA 22313-1450
www.uspto.gov

HEMINGWAY & HANSEN LLP
1717 MAIN STREET
BANK ONE CENTER, SUITE 2500
DALLAS TX 75201

COPY MAILED

AUG 06 2007

OFFICE OF PETITIONS

In re Application of	:	
Glenn Morrow	:	
Application No. 10/619,032	:	DECISION REFUSING STATUS
Filed: July 14, 2003	:	UNDER 37 CFR 1.47(b)
Attorney Docket No. P1027/15509RRUS	:	

This is in response to the petition under 37 C.F.R. § 1.47(b), filed July 2, 2007.

The petition under 37 C.F.R. § 1.47(b) is **DISMISSED**.

Rule 47 applicant is given TWO MONTHS from the mailing date of this decision to reply, correcting the below-noted deficiencies. Any reply should be entitled "Request for Reconsideration of Petition Under 37 C.F.R. § 1.47(b)," and should only address the deficiencies noted below, except that the reply may include an oath or declaration executed by the non-signing inventor. **Failure to respond will result in abandonment of the application.** Any extensions of time will be governed by 37 C.F.R. § 1.136(a).

The above-identified application was filed on July 14, 2003. However, the oath or declaration submitted with the application was defective, as pointed out to applicants in a non-final Office action mailed on March 28, 2007. In reply, applicant filed the instant petition on July 2, 2007, made timely by including a Certificate of Mailing dated June 28, 2006.

A grantable petition under 37 C.F.R. § 1.47(b) requires: (1) proof that the non-signing inventor cannot be reached or refuses to sign the oath or declaration after having been presented with the application papers (specification, claims and drawings); (2) an acceptable oath or declaration in compliance with 37 C.F.R. § 1.63; (3) the petition fee; (4) a statement of the last known address of the non-signing inventor; (5) proof that the Rule

47(b) applicant has sufficient proprietary interest in the subject matter to justify the filing of the application; and (6) proof of irreparable damage. The instant petition does not satisfy requirement (2).

As to requirement (2), Rule 47 applicant has not submitted a proper oath or declaration. On renewed petition, applicant must submit an oath or declaration in compliance with 37 C.F.R. § 1.63. As set forth in MPEP 409.03(b), the "37 CFR 1.47(b) applicant must make the oath required by 37 CFR 1.63 and 1.64 or 1.175." The title or position of the person signing must be stated if signing on behalf of a corporation. A corporation may authorize any person, including a registered attorney or agent, to sign the oath or declaration on its behalf. Where an oath or declaration is signed by a registered attorney or agent on behalf of a corporation, proof of the attorney's or agent's authority in the form of a statement signed by the appropriate corporate officer must be submitted, or the attorney or agent can simply state that he or she is authorized to sign on behalf of the corporation.

Here, the declaration submitted by Rule 47 applicant was executed by attorney Crane. However, Rule 47 applicant has not submitted proof of Crane's authority to sign the declaration on behalf of the assignee. Petitioner points out that Crane was appointed with a power of attorney by inventor Morrow. However, "an inventor may not authorize another individual to act as his or her agent to sign the application oath or declaration on his or her behalf." MPEP 409.03(b).

Further correspondence with respect to this matter should be addressed as follows:

By mail: Mail Stop Petitions
Commissioner for Patents
P.O. Box 1450
Alexandria VA 22313-1450

By FAX: (571)273-8300
Attn: Office of Petitions

Telephone inquiries related to this decision may be directed to the undersigned at (571)272-3207.

Cliff Congo
Petitions Attorney
Office of Petitions

UNITED STATES PATENT AND TRADEMARK OFFICE

Commissioner for Patents
United States Patent and Trademark Office
P.O. Box 1450
Alexandria, VA 22313-1450
www.uspto.gov

RADER, FISHMAN & GRAUER PLLC
39533 WOODWARD AVENUE
SUITE 140
BLOOMFIELD HILLS MI 48304-0610

COPY MAILED

FEB 25 2005

OFFICE OF PETITIONS

In re Application of :
Farmer, Chen and Wen :
Application No. 10/619,035 : ON PETITION
Filed: July 14, 2003 :
For:SYSTEM OR METHOD FOR SEGMENTING :
IMAGES :

This is a decision on the petition under 37 CFR 1.47(a), filed December 14, 2004.

This is also a decision on the petition under 37 CFR 1.137(b), filed December 14, 2004, to revive the above-identified application.

A review of the file reveals that on October 14, 2003, the United States Patent and Trademark Office (Office) mailed a Notice to File Missing Parts of Nonprovisional Application (Notice) to petitioner, which set forth a two-month period to submit the required payment of a $130.00 surcharge, a properly signed oath or declaration in compliance with 37 CFR 1.63, and replacement drawings in compliance with 37 CFR 1.84 and 37 CFR 1.121 to avoid abandonment of the application. Extensions of time to reply to the Notice were permissible.

Petitioner did not respond to the Notice of October 14, 2003, within the stated time period for filing a reply. Accordingly, the application became abandoned on December 15, 2003. A Notice of Abandonment was mailed on October 20, 2004.

On December 14, 2004, petitioner filed the present petitions under 37 CFR 1.47(a) and 37 CFR 1.137(b), a declaration signed by one of the three inventors, a $130.00 surcharge, and a $1,500.00 petition to revive fee. However, petitioner failed to submit replacement drawings with the present petitions as required by

the Notice of October 14, 2004. Accordingly, **this application remains abandoned.**

Under the circumstances of this application, petitioner must file a renewed petition to revive under 37 CFR 1.137(b) and replacement drawings within **TWO (2) MONTHS** of this decision before the petition under 37 CFR 1.47(a) may be addressed on its merits. No extensions of time are permissible. Accordingly, the petition is **dismissed** without prejudice. The petition under 37 CFR 1.47(a) will remain in the file until such time as petitioner has filed a grantable petition to revive under 37 CFR 1.137(b).

The Office finance records reveal that petitioner did not pay the requisite $200.00 fee for a petition under 37 CFR 1.47(a). Therefore, Deposit Account No. 18-0013 will be charge the $200.00 fee, as authorized.

Further correspondence with regard to this matter should be addressed as follows:

By mail: Mail Stop Petition
Commissioner for Patents
P.O. Box 1450
Alexandria, VA 22313-1450

By FAX: (703) 872-9306
Attn: Office of Petitions

By hand: Customer Service Window
Randolph Building
401 Dulany Street
Alexandria, VA 22314

Telephone inquiries concerning this matter may be directed to the undersigned at (571) 272-3211.

Christina Tartera Donnell

Christina Tartera Donnell
Senior Petitions Attorney
Office of Petitions

UNITED STATES PATENT AND TRADEMARK OFFICE

Commissioner for Patents
United States Patent and Trademark Office
P.O. Box 1450
Alexandria, VA 22313-1450
www.uspto.gov

RADER, FISHMAN & GRAUER PLLC
39533 WOODWARD AVENUE
SUITE 140
BLOOMFIELD HILLS MI 48304-0610

COPY MAILED

MAY 11 2005

OFFICE OF PETITIONS

In re Application of :
Farmer, Chen and Wen :
Application No. 10/619,035 : ON PETITION
Filed: July 14, 2003 :
For:SYSTEM OR METHOD FOR SEGMENTING :
IMAGES :

This is a decision on the renewed petition under 37 CFR 1.47(a), filed April 22, 2004.

This is also a decision on the renewed petition under 37 CFR 1.137(b), filed April 22, 2004, to revive the above-identified application.

The petition under 37 CFR 1.47(a) is **GRANTED**.

The petition under 37 CFR 1.137(b) is **GRANTED**.

Consideration under 37 CFR 1.47(a):

Petitioner has shown that the non-signing inventors have refused to join in the filing of the above-identified application after having been presented with the complete application papers. The above-identified application and papers have been reviewed and found in compliance with 37 CFR 1.47(a). This application is hereby accorded Rule 1.47(a) status.

As provided in Rule 1.47(a), this Office will forward notice of this application's filing to the non-signing inventors at the addresses given in the petition. Notice of the filing of this application will also be published in the Official Gazette.

Consideration under 37 CFR 1.137(b):

A review of the file reveals that on October 14, 2003, the United States Patent and Trademark Office (Office) mailed a Notice to File Missing Parts of Nonprovisional Application (Notice) to petitioner, which set forth a two-month period to submit the required payment of a $130.00 surcharge, a properly signed oath or declaration in compliance with 37 CFR 1.63, and replacement drawings in compliance with 37 CFR 1.84 and 37 CFR 1.121 to avoid abandonment of the application. Extensions of time to reply to the Notice were permissible.

Petitioner did not respond to the Notice of October 14, 2003, within the stated time period for filing a reply. Accordingly, the application became abandoned on December 15, 2003. A Notice of Abandonment was mailed on October 20, 2004.

Because this application has been accorded Rule 1.47(a) status by this decision and petitioner submitted replacement drawings and a $130.00 surcharge for the late filing of the declaration, the reply requirement of the Notice has been met.

This matter is being referred to the Office of Initial Patent Examination for further processing.

Telephone inquiries concerning this matter may be directed to the undersigned at (571) 272-3211.

Christina Tartera Donnell

Christina Tartera Donnell
Senior Petitions Attorney
Office of Petitions

UNITED STATES PATENT AND TRADEMARK OFFICE

Commissioner for Patents
United States Patent and Trademark Office
P.O. Box 1450
Alexandria, VA 22313-1450
www.uspto.gov

Michael E. Farmer
6711 Ridgeview Drive
Independence Township, MI 48346-4461

COPY MAILED

MAY 1 1 2005

OFFICE OF PETITIONS

In re Application of :
Farmer, Chen and Wen :
Application No. 10/619,035 : LETTER
Filed: July 14, 2003 :
For: SYSTEM OR METHOD FOR SEGMENTING :
IMAGES :

Dear Mr. Farmer:

You are named as a joint inventor in the above-identified United States patent application filed under the provisions of 35 U.S.C. 116 (United States Code) and 37 CFR 1.47(a), Rules of Practice in Patent Cases. Should a patent be granted on the application you will be designated therein as a joint inventor.

As a named inventor you are entitled to inspect any paper in the file wrapper of the application, order copies of all or any part thereof (at a prepaid cost per 37 CFR 1.19) or make your position of record in the application. Alternatively, you may arrange to do any of the preceding through a registered patent attorney or agent presenting written authorization from you. If you care to join the application, counsel of record (see below) would presumably assist you. Joining in the application would entail the filing of an appropriate oath or declaration by you pursuant to 37 CFR 1.63.

Requests for information regarding your application should be directed to the File Information Unit at (703) 308-2733. Information regarding how to pay for and order a copy of the application, or a specific paper in the application, should be directed to Certification Division at (703) 308-9726 or 1-800-972-6382 (outside the Washington D.C. area).

Christina T. Donnell

Christina Tartera Donnell
Senior Petitions Attorney
Office of Petitions

RADER, FISHMAN & GRAUER PLLC
39533 WOODWARD AVENUE, SUITE 140
BLOOMFIELD HILLS MI 48304-0610

UNITED STATES PATENT AND TRADEMARK OFFICE

Commissioner for Patents
United States Patent and Trademark Office
P.O. Box 1450
Alexandria, VA 22313-1450
www.uspto.gov

Xunchang Chen
307 S. Division Street
Ann Arbor, MI 48104-2203

COPY MAILED

MAY 1 1 2005

OFFICE OF PETITIONS

In re Application of :
Farmer, Chen and Wen :
Application No. 10/619,035 : LETTER
Filed: July 14, 2003 :
For: SYSTEM OR METHOD FOR SEGMENTING :
IMAGES :

Dear Mr. Chen:

You are named as a joint inventor in the above-identified United States patent application filed under the provisions of 35 U.S.C. 116 (United States Code) and 37 CFR 1.47(a), Rules of Practice in Patent Cases. Should a patent be granted on the application you will be designated therein as a joint inventor.

As a named inventor you are entitled to inspect any paper in the file wrapper of the application, order copies of all or any part thereof (at a prepaid cost per 37 CFR 1.19) or make your position of record in the application. Alternatively, you may arrange to do any of the preceding through a registered patent attorney or agent presenting written authorization from you. If you care to join the application, counsel of record (see below) would presumably assist you. Joining in the application would entail the filing of an appropriate oath or declaration by you pursuant to 37 CFR 1.63.

Requests for information regarding your application should be directed to the File Information Unit at (703) 308-2733. Information regarding how to pay for and order a copy of the application, or a specific paper in the application, should be directed to Certification Division at (703) 308-9726 or 1-800-972-6382 (outside the Washington D.C. area).

Christina T. Donnell

Christina Tartera Donnell
Senior Petitions Attorney
Office of Petitions

RADER, FISHMAN & GRAUER PLLC
39533 WOODWARD AVENUE, SUITE 140
BLOOMFIELD HILLS MI 48304-0610

UNITED STATES PATENT AND TRADEMARK OFFICE

Commissioner for Patents
United States Patent and Trademark Office
P.O. Box 1450
Alexandria, VA 22313-1450
www.uspto.gov

NEIFELD IP LAW, PC
4813-B EISENHOWER AVENUE
ALEXANDRIA VA 22304

COPY MAILED

MAY 0 2 2006

OFFICE OF PETITIONS
ON PETITION

In re Application of :
Frank PUTTKAMMER :
Application No. 10/619,038 :
Filed: July 13, 2003 :
Attorney Docket No. HANN0001 :

This is a decision on the petition under 37 CFR 1.137(b), filed January 13, 2006, and supplemented March 24, 2006, to revive the above-identified application.

The petition is **DISMISSED**.

Any request for reconsideration of this decision must be submitted within TWO (2) MONTHS from the mail date of this decision. Extensions of time under 37 CFR 1.136(a) are permitted. The reconsideration request should include a cover letter entitled "Renewed Petition under 37 CFR 1.137(b)." This is **not** a final agency action within the meaning of 5 U.S.C. § 704.

The above-identified application became abandoned for failure to reply in a timely manner to the non-final Office action mailed December 30, 2004, which set a shortened statutory period for reply of three (3) months. No extensions of time under the provisions of 37 CFR 1.136(a) were obtained. Accordingly, the above-identified application became abandoned on March 31, 2005.

A grantable petition under 37 CFR 1.137(b) must be accompanied by: (1) the required reply, unless previously filed; (2) the petition fee as set forth in 37 CFR 1.17(m); (3) a statement that the entire delay in filing the required reply from the due date for the reply until the filing of a grantable petition pursuant to 37 CFR 1.137(b) was unintentional; and (4) any terminal disclaimer (and fee as set forth in 37 CFR 1.20(d)) required by 37 CFR 1.137(d). Where there is a question as to whether either the abandonment or the delay in filing a petition under 37 CFR 1.137 was unintentional, the Commissioner may require additional information. See MPEP 711.03(c)(III)(C) and (D). The instant petition lacks item(s) (3). The instant petition include a cover sheet requesting revival under 37 CFR 1.137(b), however, the required statement of unintentional delay has not been provided.

The letter filed March 24, 2006 refers to a petition decision mailed March 16, 2006. No decision on petition was mailed on March 16, 2006.

It is noted that on December 19, 2005 the Office improperly accepted the power of attorney filed December 8, 2005. In this regard, the Revocation and New Power of Attorney filed December 8, 2005 failed to include a proper statement under 37 CFR 3.73(b). Therefore, in order for the power of attorney to be acceptable, compliance with 37 CFR 3.73(b) must be satisfied. A form for complying with the provisions of 37 CFR 3.73(b) may be found on the USPTO.gov website (Form No. PTO/SB/96).

Further correspondence with respect to this matter should be addressed as follows:

By Mail: Mail Stop PETITION
Commissioner for Patents
P. O. Box 1450
Alexandria, VA 22313-1450

By hand: U. S. Patent and Trademark Office
Customer Service Window, Mail Stop Petitions
Randolph Building
401 Dulany Street
Alexandria, VA 22314

The centralized facsimile number is **(571) 273-8300.**

Telephone inquiries should be directed to the undersigned at (571) 272-7099.

David Bucci
Petitions Examiner
Office of Petitions

UNITED STATES PATENT AND TRADEMARK OFFICE

Commissioner for Patents
United States Patent and Trademark Office
P.O. Box 1450
Alexandria, VA 22313-1450
www.uspto.gov

NEIFELD IP LAW, PC
4813-B EISENHOWER AVENUE
ALEXANDRIA VA 22304

COPY MAILED

JUN 0 9 2006

OFFICE OF PETITIONS

ON PETITION

In re Application of	:	
Frank PUTTKAMMER	:	
Application No. 10/619,038	:	
Filed: July 13, 2003	:	
Attorney Docket No. HANN0001	:	

This is a decision on the renewed petition under 37 CFR 1.137(b), filed May 25, 2006, to revive the above-identified application.

The petition is **GRANTED**.

The above-identified application became abandoned for failure to reply in a timely manner to the non-final Office action mailed December 30, 2004, which set a shortened statutory period for reply of three (3) months. Accordingly the above-identified application became abandoned on March 31, 2005.

The petition satisfies the conditions for revival pursuant to the provisions of 37 CFR 1.137(b) in that (1) the reply in the form of an amendment; (2) the petition fee of $750; and (3) the required statement of unintentional delay have been received. Accordingly, the reply to the non-final Office action of December 30, 2004 is accepted as having been unintentionally delayed.

It is not apparent whether the person signing the statement of unintentional delay was in a position to have firsthand knowledge of the facts and circumstances of the delay at issue. Nevertheless, such statement is being treated as having been made as the result of a reasonable inquiry into the facts and circumstances of such delay. See 37 CFR 10.18(b) and Changes to Patent Practice and Procedure; Final rule Notice, 62 Fed. Reg. 53131, 53178 (October 10, 1997), 1203 Off. Gaz. Pat. Office 63, 103 (October 21, 1997). In the event that such an inquiry has not been made, petitioner must make such an inquiry. If such inquiry results in the discovery that it is not correct that the entire delay in filing the required reply from the due date for the reply until the filing of a grantable petition pursuant of 37 CFR 1.137(b) was unintentional, petitioner must notify the Office.

Petitioner is reminded that a revocation of power of attorney by the assignee was filed December 8, 2005. The revocation is not acceptable because the statement under 37 CFR 3.73(b) did not include a statement specifying where documentary evidence of a chain of title from the original owner to the assignee is recorded in the assignment records of the Office (e.g., reel and frame number). A courtesy copy of this decision is being mailed to the address given on the petition; however, the office will mail all future correspondence solely to the address of record

Telephone inquiries concerning this decision should be directed to the undersigned at (571) 272-7099.

The application file is being referred to Technology Center AU 2877 for appropriate action on the amendment filed January 13, 2006.

David Bucci
Petitions Examiner
Office of Petitions

UNITED STATES PATENT AND TRADEMARK OFFICE

COMMISSIONER FOR PATENTS
UNITED STATES PATENT AND TRADEMARK OFFICE
P.O. BOX 1450
ALEXANDRIA, VA 22313-1450
www.uspto.gov
DIW 03-04

WALKER DIGITAL
FIVE HIGH RIDGE PARK
STAMFORD CT 06905

COPY MAILED
MAR 1 9 2004
OFFICE OF PETITIONS

In re Application of :	
Walker, Jorasch, Fincham, Krantz, :	DECISION REFUSING STATUS
Garcia, Gelman, Tedesco, and Tulley:	UNDER 37 CFR 1.47(a)
Application No. 10/619,066 :	
Filed: 14 July, 2003 :	
Atty Docket No. 03-041 :	

This is in response to the petition filed under 37 CFR 1.47(a) on 20 January, 2004.

The petition is **DISMISSED**.

Rule 47 applicant is given TWO MONTHS from the mailing date of this decision to reply, correcting the below-noted deficiencies. Any reply should be entitled "Request for Reconsideration of Petition Under 37 CFR 1.47(a)," and should only address the deficiencies noted below, except that the reply may include an oath or declaration executed by the non-signing inventor. **FAILURE TO RESPOND WILL RESULT IN ABANDONMENT OF THE APPLICATION.** Extensions of time may be obtained in accordance with 37 CFR 1.136(a).

The above-identified application was filed on 14 July, 2003, without an executed oath or declaration. Accordingly, on 14 October, 2003, a Notice to File Missing Parts of Nonprovisional Application was mailed, requiring an executed oath or declaration and a surcharge for its late filing.

In response, on 20 January, 2004 (certificate of mailing date 14 January, 2004), petitioners filed a declaration naming Jay S. Walker, James A. Jorasch, Magdalena M. Fincham, Jason Krantz, Victor M. Garcia, Geoffrey M. Gelman, Daniel E. Tedesco, and Stephen C. Tully as joint inventors, signed by all joint inventors except Garcia on behalf of themselves and on behalf of joint inventor Garcia, the present petition, petition fee, and the late-filing surcharge.

Petitioners state that joint inventor Garcia refused by telephone to sign any documents related to the application.

A grantable petition under 37 CFR 1.47(a) requires:

(1) proof that the non-signing inventor cannot be reached or located, notwithstanding diligent effort, or refuses to sign the oath or declaration after having been presented with the application papers (specification, claims and drawings);

(2) an acceptable oath or declaration in compliance with 35 U.S.C. §§ 115 and 116;

(3) the petition fee;

(4) a surcharge of $130 or $65 (small entity) if the petition and/or declaration is not filed at the time of filing the application, and

(5) a statement of the last known address of the non-signing inventor.

The petition lacks items (1).

In regards to item (1), petitioners have not provided proof that joint inventor Garcia was ever sent or presented with a copy of the application as filed (specification, including claims, drawings, if any, and the declaration).[1]

Petitioners may show proof that a copy of the application was sent or given to the non-signing inventor for review by providing a copy of the cover letter transmitting the application papers (specification, including claims, drawings, if any, and the declaration) to the non-signing inventor or details given in an affidavit or declaration of facts by a person having first-hand knowledge of the details.

Likewise, before a *bona fide* refusal to sign the declaration can be alleged, petitioners must show that a copy of the application was sent or given to the inventor. If the inventor refuses in writing, petitioners must submit a copy of that written refusal with any renewed petition. If the refusal was made orally to a person, then that person must provide details of the refusal in an affidavit or declaration of fact. While petitioners have presented an affidavit attesting to an unwillingness on the part of Garcia to join in the filing of the application papers, Garcia must nonetheless must be afforded an opportunity to review the application papers. Petitioners should sent or give the non-signing inventors a copy of the application papers as specified above at their respective last known addresses with a request that they sign and return the declaration.

---

[1] MPEP 409.03(d).

US 0999550304P1

Creation date: 03-23-2004
Indexing Officer: ALIEU - ANDY LIEU
Team: 1600PrintWorkingFolder
Dossier: 09995503

Legal Date: 03-19-2004

No.	Doccode	Number of pages
1	PETDEC	1

Total number of pages: 1

Remarks:

Order of re-scan issued on .....

UNITED STATES PATENT AND TRADEMARK OFFICE

Commissioner for Patents
United States Patent and Trademark Office
P.O. Box 1450
Alexandria, VA 22313-1450
www.uspto.gov
DIW 05-04

WALKER DIGITAL
FIVE HIGH RIDGE PARK
STAMFORD CT 06905

COPY MAILED
MAY 2 6 2004
OFFICE OF PETITIONS

In re Application of	:
Walker, Jorasch, Fincham, Krantz,	: DECISION ACCORDING STATUS
Garcia, Gelman, Tedesco, and Tulley	: UNDER 37 CFR 1.47(a)
Application No. 10/619,066	:
Filed: 14 July, 2003	:
Atty Docket No. 03-041	:

This is in response to the renewed petition filed under 37 CFR 1.47(a) on 13 May, 2004.

The petition is **GRANTED**.

Petitioners have shown that the non-signing inventor could not be reached to join in the filing of the above-identified reissue application despite having been sent a copy of the application papers. Specifically, petitioners have established, via the declaration of Michael D. Brinton, that a copy of the application was sent to the non-signing inventor, Victor M. Garcia. However, the non-signing inventor refused to sign the declaration naming him as a joint inventor during a telephone conversation with Mr. Brinton.

The above-identified application and papers have been reviewed and found in compliance with 37 CFR 1.47(a). This application is hereby accorded Rule 1.47(a) status.

As provided in Rule 1.47(c), this Office will forward notice of this application's filing to the non-signing inventor at the address given in the Declaration. Notice of the filing of this application will also be published in the Official Gazette.

After this decision is mailed, the application will be forwarded to Technology Center 3700 for examination in due course.

Telephone inquiries related to this decision should be directed to the undersigned at 703-308-6918.

DWood

Douglas I. Wood
Senior Petitions Attorney
Office of Petitions

UNITED STATES PATENT AND TRADEMARK OFFICE

Commissioner for Patents
United States Patent and Trademark Office
P.O. Box 1450
Alexandria, VA 22313-1450
www.uspto.gov

WOOD, HERRON & EVANS, LLP (NORDSON)
2700 CAREW TOWER
441 VINE STREET
CINCINNATI OH 45202

COPY MAILED

SEP 29 2006

OFFICE OF PETITIONS

In re Application of	:	
Brock, et al.	:	
Application No. 10/619,069	:	DECISION ON PETITION
Filed: July 14, 2003	:	UNDER 37 CFR 1.78(a)(3)
Attorney Docket No. NOR-1115	:	

This is a decision on the petition under 37 CFR 1.78(a)(3), filed March 6, 2006, to accept an unintentionally delayed claim under 35 U.S.C. §120 for the benefit of the prior-filed nonprovisional application set forth in the petition.

The petition is **DISMISSED.**

A petition for acceptance of a claim for late priority under 37 CFR 1.78(a)(3) is only applicable to those applications filed on or after November 29, 2000 and after the expiration of the period specified in 37 CFR 1.78(a)(2)(ii). In addition, the petition under 37 CFR 1.78(a)(3) must be accompanied by:

(1) the reference required by 35 U.S.C. § 120 and 37 CFR 1.78(a)(2)(i) of the prior-filed application, unless previously submitted;
(2) the surcharge set forth in § 1.17(t); and
(3) a statement that the entire delay between the date the claim was due under 37 CFR 1.78(a)(2)(ii) and the date the claim was filed was unintentional. The Director may require additional information where there is a question whether the delay was unintentional.

The petition does not comply with item (1).

37 CFR 1.78(a)(2)(i) requires that any nonprovisional application claiming the benefit of one or more prior-filed copending nonprovisional applications must contain or be amended to contain a reference to each such prior-filed application, identifying it by application number (consisting of the series code and serial number) and indicating the relationship of the applications.

The relationship between the applications is whether the subject application is a continuation, divisional, or continuation-in-part of a prior-filed nonprovisional application. An example of a proper benefit claim is: "This application is a continuation of Application No. 10/---, filed---." A benefit claim that merely states: "This application claims the benefit of Application No. 10/---, filed---," does not comply with 37 CFR 1.72(a)(2)(i) since the proper relationship, which includes the type of continuing application, is not stated. Also, the status of each nonprovisional parent application (if it is patented or abandoned) should also be indicated, following the filing date of the parent nonprovisional application. *See* MPEP Section 201.11, Reference to Prior Nonprovisional Applications. The amendment fails to comply with the provisions of 37 CFR 1.78(a)(2)(i) and is therefore unacceptable.

In addition, the amendment as drafted is unacceptable. In this regard, the amendment is physically part of the petition and, as such, does not comply with 37 CFR 1.121, 1.52, or 1.4(c). Note that 37 CFR 1.121 states that amendments are made by filing a paper, in compliance with § 1.52, directing that specified amendments be made. The pertinent section of 37 CFR 1.52 states that the claim (in this case, the claim for priority), must commence on a separate physical sheet. 37 CFR 1.4(c) states that each distinct subject must be contained in a separate paper since different matters may be considered by different branches of the United States Patent and Trademark Office.

Before the petition under 37 CFR § 1.78(a)(3) can be granted, a renewed petition under 37 CFR § 1.78(a)(3) and an Application Data Sheet or a substitute amendment (complying with 37 CFR 1.121 and 37 CFR 1.76(b)(5)), which states the relationship of the prior-filed application to this application, are required.

Further correspondence with respect to this matter should be addressed as follows:

By mail: Mail Stop PETITIONS
Commissioner for Patents
Post Office Box 1450
Alexandria, VA 22313-1450

By hand: Customer Service Window
Mail Stop Petitions
Randolph Building
401 Dulany Street
Alexandria, VA 22314

By fax: (571) 273-8300
ATTN: Office of Petitions

Any questions concerning this matter may be directed to the undersigned at (571) 272-3230.

Shirene Willis Brantley

Shirene Willis Brantley
Senior Petitions Attorney
Office of Petitions

UNITED STATES PATENT AND TRADEMARK OFFICE

Commissioner for Patents
United States Patent and Trademark Office
P.O. Box 1450
Alexandria, VA 22313-1450
www.uspto.gov

WOOD, HERRON & EVANS, LLP (NORDSON)
2700 CAREW TOWER
441 VINE STREET
CINCINNATI OH 45202

COPY MAILED

NOV 22 2006

OFFICE OF PETITIONS

In re Application of	:	
Brock, et al.	:	
Application No. 10/619,069	:	DECISION ON PETITION
Filed: July 14, 2003	:	UNDER 37 CFR 1.78(a)(3) &(a)(6)
Attorney Docket No. NOR-1115	:	

This is a decision on the petition under 37 CFR 1.78(a)(3) and 1.78(a)(6), filed October 5, 2006, to accept an unintentionally delayed claim under 35 U.S.C. 120 and 119(e) for the benefit of priority to the prior-filed nonprovisional and provisional applications set forth in the concurrently filed amendment.

The petition is **DISMISSED**

A petition for acceptance of a claim for late priority under 37 CFR 1.78(a)(3) and 1.78(a)(6) is only applicable to those applications filed on or after November 29, 2000 and after the expiration of the period specified in 37 CFR 1.78(a)(2)(ii) and 1.78(a)(5)(ii). In addition, the petition under 37 CFR 1.78(a)(3) and 1.78(a)(6) must be accompanied by:

(1) the reference required by 35 U.S.C. 120 and 119(e) and 37 CFR 1.78(a)(2)(i) and 1.78(a)(5)(i) of the prior-filed application, unless previously submitted;
(2) the surcharge set forth in § 1.17(t); and
(3) a statement that the entire delay between the date the claim was due under 37 CFR 1.78(a)(2)(ii) and 1.78(a)(5)(ii) and the date the claim was filed was unintentional. The Director may require additional where there is a question whether the delay was unintentional.

The petition does not comply with item (1).

The amendment is not acceptable as drafted since it improperly incorporates by reference the newly added provisional application. An incorporation by reference of nonprovisional application no. 10/283,690 is permissible.

An incorporation by reference statement added after an application's filing date is not effective because no new matter can be added to an application after its filing date (*see* 35 U.S.C. 132(a)). If an incorporation by reference statement is included in an amendment to the specification to add a benefit claim under 35 U.S.C. 120 after the filing date of the application, the amendment would not be proper. When a benefit claim under 35 U.S.C. 120 is submitted after the filing of an application, the reference to the prior application cannot include an incorporation by reference statement of the prior application. *See* Dart Industries v. Banner, 636 F.2d 684, 207 USPQ 273 (C.A.D.C. 1980). *Note* MPEP §§ 201.06(c) and 608.04(b). This holds true with respect to addition of a benefit claim under 37 CFR 1.119.

Before the petition under 37 CFR 1.78(a)(3) and 1.78(a)(6) can be granted, a renewed petition and either an Application Data Sheet or a substitute amendment (complying with the provisions of 37 CFR 1.121 and 37 CFR 1.76(b)(5)) to correct the above matter is required.

Further correspondence with respect to this matter should be addressed as follows:

By mail: Mail Stop PETITIONS
Commissioner for Patents
Post Office Box 1450
Alexandria, VA 22313-1450

By hand: Customer Service Window
Mail Stop Petitions
Randolph Building
401 Dulany Street
Alexandria, VA 22314

By fax: (571) 273-8300
ATTN: Office of Petitions

Any questions concerning this matter may be directed to the undersigned at (571) 272-3230.

Shirene Willis Brantley

Shirene Willis Brantley
Senior Petitions Attorney
Office of Petitions

UNITED STATES PATENT AND TRADEMARK OFFICE

Commissioner for Patents
United States Patent and Trademark Office
P.O. Box 1450
Alexandria, VA 22313-1450
www.uspto.gov

WOOD, HERRON & EVANS, LLP (NORDSON)
2700 CAREW TOWER
441 VINE STREET
CINCINNATI OH 45202

COPY MAILED

JAN 03 2007

OFFICE OF PETITIONS

In re Application of
Brock, et al.
Application No. 10/619,069
Filed: July 14, 2003
Attorney Docket No. NOR-1115

DECISION ON PETITION
UNDER 37 CFR 1.78(a)(3) &(a)(6)

This is a decision on the petition under 37 CFR 1.78(a)(3) and 1.78(a)(6), filed October 5, 2006, to accept an unintentionally delayed claim under 35 U.S.C. 120 and 119(e) for the benefit of priority to the prior-filed nonprovisional and provisional applications set forth in the concurrently filed amendment.

The petition is **GRANTED**

A petition for acceptance of a claim for late priority under 37 CFR 1.78(a)(3) and 1.78(a)(6) is only applicable to those applications filed on or after November 29, 2000 and after the expiration of the period specified in 37 CFR 1.78(a)(2)(ii) and 1.78(a)(5)(ii). In addition, the petition under 37 CFR 1.78(a)(3) and 1.78(a)(6) must be accompanied by:

(1) the reference required by 35 U.S.C. 120 and 119(e) and 37 CFR 1.78(a)(2)(i) and 1.78(a)(5)(i) of the prior-filed application, unless previously submitted;
(2) the surcharge set forth in § 1.17(t); and
(3) a statement that the entire delay between the date the claim was due under 37 CFR 1.78(a)(2)(ii) and 1.78(a)(5)(ii) and the date the claim was filed was unintentional. The Director may require additional where there is a question whether the delay was unintentional.

Additionally, the instant nonprovisional application must be pending at the time of filing of the reference to the prior-filed provisional application as required by 37 CFR 1.78(a)(5)(ii). Further, the nonprovisional application claiming the benefit of the prior-filed provisional application must have been filed within twelve months of the filing date of the prior-filed provisional application.

All the above requirements having been satisfied, the late claim for benefit of priority under 35 U.S.C. §§ 120 and 119(e) is accepted as being unintentionally delayed.

The granting of the petition to accept the delayed benefit claim to the prior-filed applications under 37 CFR §§ 1.78(a)(3) and 1.78(a)(6) should not be construed as meaning that this application is entitled to the benefit of the filing date of the prior-filed applications. In order for this application to be entitled to the benefit of the prior-filed applications, all other requirements under 35 U.S.C. §§120 and 1.78(a)(1) and (a)(2) and under 35 U.S.C. §119(e) and 37 CFR 1.78(a)(4) and (a)(5) must be met. Similarly, the fact that the corrected Filing Receipt accompanying this decision on petition includes the prior-filed applications should not be construed as meaning that applicant is entitled to the claim for benefit of priority to the prior-filed applications noted thereon. Accordingly, the examiner will, in due course, consider this benefit claim and determine whether the application is entitled to the benefit of the earlier filing date.

A corrected Filing Receipt, which includes the priority claim to the prior-filed applications, accompanies this decision on petition.

Any questions concerning this matter may be directed to the undersigned at (571) 272-3230. All other inquiries concerning either the examination procedures or status of the application should be directed to the Technology Center.

This application is being forwarded to Technology Center Art Unit 1733 for consideration by the examiner of the claim under 35 U.S.C. § §120 and 119(e) of the prior-filed nonprovisional and provisional applications.

Shirene Willis Brantley

Shirene Willis Brantley
Senior Petitions Attorney
Office of Petitions

ATTACHMENT : Corrected Filing Receipt

UNITED STATES PATENT AND TRADEMARK OFFICE

UNITED STATES DEPARTMENT OF COMMERCE
United States Patent and Trademark Office
Address: COMMISSIONER FOR PATENTS
P.O. Box 1450
Alexandria, Virginia 22313-1450
www.uspto.gov

APPL NO.	FILING OR 371 (c) DATE	ART UNIT	FIL FEE REC'D	ATTY.DOCKET NO	DRAWINGS	TOT CLMS	IND CLMS
10/619,069	07/14/2003	1733	1068	NOR-1115	3	33	4

CONFIRMATION NO. 6962

CORRECTED FILING RECEIPT

OC000000021715709

37172
WOOD, HERRON & EVANS, LLP (NORDSON)
2700 CAREW TOWER
441 VINE STREET
CINCINNATI, OH 45202

Date Mailed: 12/22/2006

Receipt is acknowledged of this regular Patent Application. It will be considered in its order and you will be notified as to the results of the examination. Be sure to provide the U.S. APPLICATION NUMBER, FILING DATE, NAME OF APPLICANT, and TITLE OF INVENTION when inquiring about this application. Fees transmitted by check or draft are subject to collection. Please verify the accuracy of the data presented on this receipt. **If an error is noted on this Filing Receipt, please mail to the Commissioner for Patents P.O. Box 1450 Alexandria Va 22313-1450. Please provide a copy of this Filing Receipt with the changes noted thereon. If you received a "Notice to File Missing Parts" for this application, please submit any corrections to this Filing Receipt with your reply to the Notice. When the USPTO processes the reply to the Notice, the USPTO will generate another Filing Receipt incorporating the requested corrections (if appropriate).**

Applicant(s)

Reuben Brock, Suwanee, GA;
Raza Hayder, Duluth, GA;

Assignment For Published Patent Application

Nordson Corporation, Westlake, OH

Power of Attorney: The patent practitioners associated with Customer Number **37172**.

Domestic Priority data as claimed by applicant

This application is a CIP of 10/283,690 10/30/2002 ABN
which claims benefit of 60/364,811 03/15/2002

Foreign Applications

If Required, Foreign Filing License Granted: 10/09/2003

The country code and number of your priority application, to be used for filing abroad under the Paris Convention, is US10/619,069

Projected Publication Date: Not Applicable

Non-Publication Request: No

Early Publication Request: No

Title

Method of securing elastic strands to flat substrates and products produced by the method

Preliminary Class

156

PROTECTING YOUR INVENTION OUTSIDE THE UNITED STATES

Since the rights granted by a U.S. patent extend only throughout the territory of the United States and have no effect in a foreign country, an inventor who wishes patent protection in another country must apply for a patent in a specific country or in regional patent offices. Applicants may wish to consider the filing of an international application under the Patent Cooperation Treaty (PCT). An international (PCT) application generally has the same effect as a regular national patent application in each PCT-member country. The PCT process **simplifies** the filing of patent applications on the same invention in member countries, but **does not result** in a grant of "an international patent" and does not eliminate the need of applicants to file additional documents and fees in countries where patent protection is desired.

Almost every country has its own patent law, and a person desiring a patent in a particular country must make an application for patent in that country in accordance with its particular laws. Since the laws of many countries differ in various respects from the patent law of the United States, applicants are advised to seek guidance from specific foreign countries to ensure that patent rights are not lost prematurely.

Applicants also are advised that in the case of inventions made in the United States, the Director of the USPTO must issue a license before applicants can apply for a patent in a foreign country. The filing of a U.S. patent application serves as a request for a foreign filing license. The application's filing receipt contains further information and guidance as to the status of applicant's license for foreign filing.

Applicants may wish to consult the USPTO booklet, "General Information Concerning Patents" (specifically, the section entitled "Treaties and Foreign Patents") for more information on timeframes and deadlines for filing foreign patent applications. The guide is available either by contacting the USPTO Contact Center at 800-786-9199, or it can be viewed on the USPTO website at http://www.uspto.gov/web/offices/pac/doc/general/index.html.

For information on preventing theft of your intellectual property (patents, trademarks and copyrights), you may wish to consult the U.S. Government website, http://www.stopfakes.gov. Part of a Department of Commerce initiative, this website includes self-help "toolkits" giving innovators guidance on how to protect intellectual property in specific countries such as China, Korea and Mexico. For questions regarding patent enforcement issues, applicants may call the U.S. Government hotline at 1-866-999-HALT (1-866-999-4158).

LICENSE FOR FOREIGN FILING UNDER
Title 35, United States Code, Section 184
Title 37, Code of Federal Regulations, 5.11 & 5.15

GRANTED

The applicant has been granted a license under 35 U.S.C. 184, if the phrase "IF REQUIRED, FOREIGN FILING LICENSE GRANTED" followed by a date appears on this form. Such licenses are issued in all applications where the conditions for issuance of a license have been met, regardless of whether or not a license may be required as set forth in 37 CFR 5.15. The scope and limitations of this license are set forth in 37 CFR 5.15(a) unless an earlier license has been issued under 37 CFR 5.15(b). The license is subject to revocation upon written notification. The date indicated is the effective date of the license, unless an earlier license of similar scope has been granted

under 37 CFR 5.13 or 5.14.

This license is to be retained by the licensee and may be used at any time on or after the effective date thereof unless it is revoked. This license is automatically transferred to any related applications(s) filed under 37 CFR 1.53(d). This license is not retroactive.

The grant of a license does not in any way lessen the responsibility of a licensee for the security of the subject matter as imposed by any Government contract or the provisions of existing laws relating to espionage and the national security or the export of technical data. Licensees should apprise themselves of current regulations especially with respect to certain countries, of other agencies, particularly the Office of Defense Trade Controls, Department of State (with respect to Arms, Munitions and Implements of War (22 CFR 121-128)); the Bureau of Industry and Security, Department of Commerce (15 CFR parts 730-774); the Office of Foreign Assets Control, Department of Treasury (31 CFR Parts 500+) and the Department of Energy.

NOT GRANTED

No license under 35 U.S.C. 184 has been granted at this time, if the phrase "IF REQUIRED, FOREIGN FILING LICENSE GRANTED" DOES NOT appear on this form. Applicant may still petition for a license under 37 CFR 5.12, if a license is desired before the expiration of 6 months from the filing date of the application. If 6 months has lapsed from the filing date of this application and the licensee has not received any indication of a secrecy order under 35 U.S.C. 181, the licensee may foreign file the application pursuant to 37 CFR 5.15(b).

UNITED STATES PATENT AND TRADEMARK OFFICE

Commissioner for Patents
United States Patent and Trademark Office
P.O. Box 1450
Alexandria, VA 22313-1450
www.uspto.gov
DIW 02-05

DANN, DORFMAN, HERRELL & SKILLMAN
1601 MARKET STREET
SUITE 2400
PHILADELPHIA PA 19103-2307

COPY MAILED

FEB 22 2005

OFFICE OF PETITIONS

In re Application of	:	
George T. Mott	:	
Application No. 10/619,082	:	ON PETITION
Filed: 14 July, 2003	:	
Attorney Docket No. 0034-P02938US1	:	

This is a decision on the petition filed on 31 January, 2005, under 37 CFR 1.137(a)[1] to revive the above-identified application which is first treated as a petition to withdraw the holding of abandonment.

The petition to withdraw the holding of abandonment is **dismissed**.

The petition to revive under 37 CFR 1.137(a) is **granted**.

---

[1]A grantable petition under 37 CFR 1.137(a) must be accompanied by:

(1) the required reply, unless previously filed; In a nonprovisional application abandoned for failure to prosecute, the required reply may be met by the filing of a continuing application. In a nonprovisional utility or plant application filed on or after June 8, 1995, and abandoned for failure to prosecute, the required reply may also be met by the filing of a request for continued examination in compliance with § 1.114. In an application or patent, abandoned or lapsed for failure to pay the issue fee or any portion thereof, the required reply must be the payment of the issue fee or any outstanding balance thereof.

(2) the petition fee as set forth in 37 CFR 1.17(l);

(3) a showing to the satisfaction of the Commissioner that the entire delay in filing the required reply from the due date for the reply until the filing of a grantable petition pursuant to 37 CFR 1.137(a) was unavoidable; and

(4) any terminal disclaimer (and fee as set forth in 37 CFR 1.20(d)) required pursuant to 37 CFR 1.137(c)).

This application became abandoned on 15 July, 2004, for failure to timely submit a reply to the non-final Office action mailed on 14 April, 2004, which set a three (3) month shortened statutory period for reply. No extensions of the time for reply in accordance with 37 CFR 1.136(a) were obtained. Notice of Abandonment was mailed on 17 December, 2004.

Petitioner asserts that a reply to the Office action was timely filed with a one (1)-month extension of time.

In support, petitioner has supplied a copy of an amendment and request for one (1) month extension of time. The paper contains a "Certificate of Mailing Under 37 CFR 1.8(a)" signed by counsel's secretary, Dawn M. Holzwarth, stating that the paper was deposited on July 26, 2004 as first-class mail in an envelope addressed to COMMISSIONER OF PATENTS, Alexandria, VA 22313-1450. Petitioners have also provided a verified statement from Ms. Holzwarth attesting to the above.

PETITION TO WITHDRAW THE HOLDING OF ABANDONMENT

Petitioner's showing of evidence has been considered, but is not persuasive.

37 CFR 1.1 states, in pertinent part:

> 1.1 Addresses for non-trademark correspondence with the United States Patent and Trademark Office.
>
> > (a) In general. Except as provided in paragraphs (a)(3)(i), (a)(3)(ii) and (d)(1) of this section, all correspondence intended for the United States Patent and Trademark Office must be addressed to either "Director of the United States Patent and Trademark Office, **P.O. Box 1450**, Alexandria, Virginia 22313-1450" or to specific areas within the Office as set out in paragraphs (a)(1) and (a)(3)(iii) of this section. When appropriate, correspondence should also be marked for the attention of a particular office or individual.
> >
> > (1) Patent correspondence.
> >
> > (i) In general. All

> correspondence concerning patent matters processed by organizations reporting to the Commissioner for Patents should be addressed to: Commissioner for Patents, **PO Box 1450**, Alexandria, Virginia 22313-1450.

(Emphasis added)

37 CFR 1.8(a) states, in pertinent part:

> § 1.8 Certificate of mailing or transmission.
>
> (a) Except in the cases enumerated in paragraph (a)(2) of this section, correspondence required to be filed in the Patent and Trademark Office within a set period of time will be considered as being timely filed if the procedure described in this section is followed. The actual date of receipt will be used for all other purposes.
>
> (1) Correspondence will be considered as being timely filed if:
>
> (i) The correspondence is mailed or transmitted prior to expiration of the set period of time by being:
>
> (A) Addressed as set out in § **1.1(a)** and deposited with the U.S. Postal Service with sufficient postage as first class mail...

(Emphasis added)

The showing of record is that the certificate of mailing, and the reply to the Office action, were not properly addressed to the USPTO in that petitioner omitted the "P.O. Box 1450" portion of the address. While it appears that such error was clerical in nature, petitioner did not, in fact, address his correspondence as set forth in 37 CFR 1.1(a). As such, petitioner did not comply with the certificate of mailing requirements of 37 CFR

1.8(a). Therefore, the showing of record is that the correspondence may not have been received in the Office as a result of being misaddressed.

In view of the above, the petition under 37 CFR 1.181 is dismissed, and the holding of abandonment will not be withdrawn.

PETITION UNDER 37 CFR 1.137(a).

The petition is granted.

The application has been restored to pending status.

The application is being forwarded to Technology Center Art Unit 3651 for further processing.

Telephone inquiries concerning this matter may be directed to the undersigned at (571)272-3231.

D Wood

Douglas I. Wood
Senior Petitions Attorney
Office of Petitions

UNITED STATES PATENT AND TRADEMARK OFFICE

COMMISSIONER FOR PATENTS
UNITED STATES PATENT AND TRADEMARK OFFICE
P.O. BOX 1450
ALEXANDRIA, VA 22313-1450
WWW.USPTO.GOV

Paper No. None

SMYRSKI & LIVESAY, LLP
3310 AIRPORT AVENUE, SW
SANTA MONICA CA 90405

COPY MAILED

MAR 0 4 2004

OFFICE OF PETITIONS

In re Application of :
Mark E. Steen et al. :
Application No. 10/619,088 :
Filed: July 14, 2003 :
Attorney Docket No. AM00007 :
Title: SYSTEM AND METHOD FOR :
MODULATED SURGICAL PROCEDURE :
IRRIGATION AND ASPIRATION :

DECISION ON PETITION
UNDER 37 C.F.R. §1.53(e)

This is a decision on the petition filed December 10, 2003[1], requesting the application, including Figure eighteen (18) be accorded a filing date of July 14, 2003 as part of the original disclosure.

The application was deposited on July 14, 2003. However, on October 9, 2003, the Office of Initial Patent Examination (OIPE) mailed a "Notice to File Missing Parts of Nonprovisional Application" (Notice), stating that the application had been accorded a filing date of July 14, 2003, and advising applicant that Figure eighteen (18) appeared to have been omitted. The Notice further indicated that the basic filing fee, an executed oath or declaration, and the fee associated with the late filing of an oath or declaration would be required. The Notice set a two-month period for reply.

In response, on December 10, 2003, applicants filed the present petition. The petition is further accompanied by a copy of twenty-two (22) sheets of drawings containing Figures one through twenty-two (1-22), the basic filing fee, fees associated with the filing of additional claims, the fee associated with the late filing of an oath or declaration, and a declaration. Petitioner has also submitted a copy of applicants' postcard receipt which properly itemizes the drawings as "Drawings: # of Sheets - 22," as well as a copy of the certificate of mailing which sets forth that "22 sheets of informal

1 The petition contains a certificate of mailing dated December 8, 2003.

drawings…are being deposited in the United States Postal Service 'Express Mail Post Office to Addressee' service…on…7/14/03."

Regarding the postcard receipt, it is noted that it does not bear a date stamp from OIPE. As such, it cannot be relied upon as evidence that Figure eighteen (18) was included on filing[2].

Regarding the certificate of mailing, 37 C.F.R. §1.8(a)(2)(i)(A) explicitly removes "the filing of a national patent application specification and drawing or other correspondence for the purpose of obtaining an application filing date" from certificate of mailing practice. As such, a certificate of mailing cannot be used to obtain a filing date for a figure which was purportedly included on filing.

As such, the petition is DISMISSED.

The drawing sheet received with the instant petition containing Figure eighteen (18) will not be entered. If petitioner desires for the examiner to enter this drawing sheet, which was not submitted as part of the original disclosure, then petitioner may submit this page via an amendment. Any such amendment will, of course, be reviewed by the examiner for new matter[3]. The amendment is not new matter if the substance was a part of the disclosure of the prior application.

The original application papers will include only those application papers present on the date of deposit.

The petition fee of $130.00 will not be refunded, as this petition was not necessitated by any error on the part of the Office.

The Application is being returned to the Office of Initial Patent Examination for further processing, using only the application papers filed on that date.

Telephone inquiries specific to this matter should be directed to the undersigned at (703) 305-0011.

Paul Shanoski
Attorney
Office of Petitions
United States Patent and Trademark Office

---

2 MPEP §503 sets forth "A postcard receipt which itemizes and properly identifies the items which are being filed serves as prima facie evidence of receipt in the USPTO of all the items listed thereon *on the date stamped thereon by the USPTO*." (emphasis added)

3 See MPEP §608.02(a).

UNITED STATES PATENT AND TRADEMARK OFFICE

Commissioner for Patents
United States Patent and Trademark Office
P.O. Box 1450
Alexandria, VA 22313-1450
www.uspto.gov

Pillsbury Winthrop Shaw Pittman LLP
PO Box 10500
McLean, VA 22102

COPY MAILED
NOV 14 2006
OFFICE OF PETITIONS

In re Application of Irving et al. :
Application No. 10/619,101 :
Filing Date: July 14, 2003 :
Attorney Docket No. 3800.05 :

Decision on Petition

This is a decision on the petition under 37 CFR 1.137(b), filed August 2, 2006, to revive the above-identified application.

The petition is **granted**.

The above-identified application became abandoned for failure to reply in a timely manner to the non-final Office action mailed December 29, 2005, which set a shortened statutory period for reply of three (3) months. An extension of time under the provisions of 37 CFR 1.136(a) was not obtained. Accordingly, the above-identified application became abandoned on March 30, 2006. A Notice of Abandonment was mailed on July 13, 2006.

The instant petition requests revival of the application.

Petitioner has met the requirements to revive the above-identified application pursuant to 37 CFR 1.137(b). Therefore, the petition is granted and the application is revived.

Timothy Rooney signed the petition. Rooney was not an attorney or agent of record at the time the application became abandoned. Therefore, it appears Rooney was not in a position to have firsthand or direct knowledge of the facts and circumstances of the delay. Nevertheless, the statement by Rooney that the entire delay was unintentional is being treated as having been made as the result of a reasonable inquiry into the facts and circumstances of such delay.[1] In the event that such an inquiry has not been made, petitioner must make such an inquiry. If such inquiry results in the discovery that a portion of the delay from the due date for the reply until the filing of a grantable petition pursuant to 37 CFR 1.137(b) was unintentional, petitioner must notify the Office.

The file does not indicate a change of address has been submitted, although the address given on the petition differs from the address of record. If appropriate, a proper request to change the

[1] See Changes to Patent Practice and Procedure, 62 *Fed. Reg.* at 53160 and 53178; 1203 *Off. Gaz. Pat. Office* at 88 and 103 (responses to comments 64 and 109) (applicant obligated under 37 CFR 10.18 to inquire into the underlying facts and circumstances when providing the statement required by 37 CFR 1.137(b) to the Patent and Trademark Office).

address of record should be filed. A courtesy copy of this decision is being mailed to the address given on the petition; however, the Office will mail all future correspondence solely to the address of record.

Petitioner's deposit account was charged $510 for a three-month extension of time. However, payment for an extension of time is unnecessary when reviving an application. Therefore, the fee of $510 will be credited back to petitioner's deposit account.

Technology Center Art Unit 2161 will be informed of the instant decision and the application will be further examined in due course.

Telephone inquiries regarding this communication should be directed to Petitions Attorney Steven Brantley at (571) 272-3203.

Charles Steven Brantley
Senior Petitions Attorney
Office of Petitions

UNITED STATES PATENT AND TRADEMARK OFFICE

Commissioner for Patents
United States Patent and Trademark Office
P.O. Box 1450
Alexandria, VA 22313-1450
www.uspto.gov

PARSONS HSUE & DE RUNTZ LLP
595 MARKET STREET
SUITE 1900
SAN FRANCISCO CA 94105

COPY MAILED

FEB 0 6 2006

OFFICE OF PETITIONS

In re Application of	:	
Marxer et al.	:	Letter Notifying Applicant the
Application No. 10/619,109	:	Application Has Been Accorded
Filed: July 10, 2003	:	Status Under 37 CFR 1.47
Attorney Docket No. TNCR.007US3	:	

This is in response to the papers filed October 7, 2005.

The instant application is a continuation of application no. 09/901,998 which is a continuation of application no. 08/770,491. Application no. 08/770,491 was accorded status under 37 CFR 1.47. When a prior application has been accorded status under 37 CFR 1.47, an applicant may submit a copy of the declaration from the prior application and a copy of the prior application's Rule 47 decision letter instead of submitting a new petition under 37 CFR 1.47.[1]

The instant application contains copies of the declaration and Rule 47 decision from the prior application. Therefore, the declaration is accepted and the signing inventors may prosecute the application on behalf of the non-signing inventor.

The application is hereby accorded Rule 1.47(a) status.

The Office of Publications will be informed of the instant decision so that it may continue to take steps to issue the application as a patent.

Telephone inquiries regarding this communication should be directed to Petitions Attorney Steven Brantley at (571) 272-3203.

Charles Steven Brantley
Petitions Attorney
Office of Petitions

[1] 37 CFR 1.63(d)(3) states, "Where the executed oath or declaration of which a copy is submitted for a continuation or divisional application was originally filed in a prior application accorded status under § 1.47, the copy of the executed oath or declaration for such prior application must be accompanied by . . . A copy of the decision granting a petition to accord § 1.47 status to the prior application, unless all inventors or legal representatives have filed an oath or declaration to join in an application accorded status under § 1.47 of which the continuation or divisional application claims a benefit."

UNITED STATES PATENT AND TRADEMARK OFFICE

Commissioner for Patents
United States Patent and Trademark Office
P.O. Box 1450
Alexandria, VA 22313-1450
www.uspto.gov

WOLF, BLOCK, SHORR AND SOLIS-COHEN LLP
250 PARK AVENUE, 10TH FLOOR
NEW YORK NY 10177

COPY MAILED

NOV 0 3 2006

OFFICE OF PETITIONS

In re Application of	:	
GRIFFIN	:	
Application No. 10/619,154	:	DECISION ON PETITION
Filed: July 14, 2003	:	TO MAKE SPECIAL UNDER
Attorney Docket No. 91233.069703	:	37 CFR 1.102(c)(1)
	:	

This is a decision on the petition under 37 CFR 1.102(c)(1), filed October 25, 2006 and re-submitted October 31, 2006, to make the above-identified application special based on applicant's age as set forth in M.P.E.P. § 708.02, Section IV.

The petition is **GRANTED**.

A grantable petition to make an application special under 37 CFR 1.102(c)(1) and MPEP § 708.02, Section IV: Applicant's Age, must be accompanied by evidence showing that at least one of the applicants is 65 years of age, or more, such as a birth certificate or a statement by applicant. No fee is required.

The instant petition includes the driver's license and affidavit of inventor James Patrick Griffin, attesting to his age. Accordingly, the above-identified application has been accorded "special" status.

Telephone inquiries concerning this decision should be directed to the undersigned at 571-272-7253.

All other inquiries concerning either the examination or status of the application should be directed to the Technology Center.

The application is being forwarded to the Technology Center Art Unit 3634 for action on the merits commensurate with this decision.

Monica A. Graves
Petitions Examiner
Office of Petitions

SPE RESPONSE FOR CERTIFICATE OF CORRECTION

10/619169

Paper No:20100330

DATE : March 30, 2010

TO SPE OF : ART UNIT 2816

SUBJECT : Request for Certificate of Correction on Patent No.: 7,560,958

A response is requested with respect to the accompanying request for a certificate of correction.

Please complete this form and return with file, within **7** days to:
Certificates of Correction Branch - ST (South Tower) 9A22
Palm location **7590** - Tel. No. (703) 305-8309

With respect to the change(s) requested, correcting Office and/or Applicant's errors, should the patent read as shown in the certificate of correction? No new matter should be introduced, nor should the scope or meaning of the claims be changed.

Thank You For Your Assistance **Certificates of Correction Branch**

The request for issuing the above-identified correction(s) is hereby:

Note your decision on the appropriated box.

☒ **Approved** All changes apply.

☐ **Approved in Part** Specify below which changes **do not** apply.

☐ **Denied** State the reasons for denial below.

Comments:

/Lincoln Donovan/
Supervisory Patent Examiner.Art Unit 2816

UNITED STATES PATENT AND TRADEMARK OFFICE

Commissioner for Patents
United States Patent and Trademark Office
P.O. Box 1450
Alexandria, VA 22313-1450
www.uspto.gov

MAIL

OCT 1 9 2005

DIRECTOR OFFICE
TECHNOLOGY CENTER 2600

MILDE & HOFFBERG, LLP
10 BANK STREET
SUITE 460
WHITE PLAINS, N.Y. 10606

In re Application of
Richard Grant

Application No. 10/619,204
Filed: July 14, 2003
For: **METHOD FOR INTEGRATING PROCESSES WITH A MULTI-FACETED HUMAN CENTERED INTERFACE**

DECISION ON REQUEST TO WITHDRAW FROM RECORD

This is a decision on the Request for Withdrawal as attorney or agent and change of address filed on April 12, 2004.

A grantable request to withdraw as attorney/agent of record must:
(1) indicate the present mailing address of the attorney(s)/agent(s) who seek(s) to withdraw, and
(2) be signed by each attorney/agent seeking to withdraw or clearly be signed on their behalf, and
(3) be *approved* at least thirty (30) days prior to the maximum extendable period for response to any outstanding Office Action, and
(4) indicate the address to which future correspondence should be mailed.

A Revocation and Power of Attorney was filed May 25, 2004 and accepted on July 26, 2004.

Accordingly, the request is **DISMISSED**.

All future communications from the Office will be directed to the address listed above until otherwise notified by applicant. Applicant is reminded of the obligation to promptly notify the Patent and Trademark Office of any change in correspondence address to ensure receipt of all communications from the Office.

Kenneth A. Wieder
Special Program Examiner
Technology Center 2600
Communications

UNITED STATES PATENT AND TRADEMARK OFFICE

UNITED STATES DEPARTMENT OF COMMERCE
United States Patent and Trademark Office
Address: COMMISSIONER FOR PATENTS
P.O. Box 1450
Alexandria, Virginia 22313-1450
www.uspto.gov

APPL NO.	FILING OR 371 (c) DATE	ART UNIT	FIL FEE REC'D	ATTY.DOCKET NO	DRAWINGS	TOT CLMS	IND CLMS
10/619,225	07/14/2003	2621	1002	200308682-1	8	34	3

CONFIRMATION NO. 7001

CORRECTED FILING RECEIPT

OC000000012112671

HEWLETT-PACKARD COMPANY
Intellectual Property Administration
P. O. Box 272400
Fort Collins, CO 80527-2400

Date Mailed: 03/16/2004

Receipt is acknowledged of this regular Patent Application. It will be considered in its order and you will be notified as to the results of the examination. Be sure to provide the U.S. APPLICATION NUMBER, FILING DATE, NAME OF APPLICANT, and TITLE OF INVENTION when inquiring about this application. Fees transmitted by check or draft are subject to collection. Please verify the accuracy of the data presented on this receipt. **If an error is noted on this Filing Receipt, please write to the Office of Initial Patent Examination's Filing Receipt Corrections, facsimile number 703-746-9195. Please provide a copy of this Filing Receipt with the changes noted thereon. If you received a "Notice to File Missing Parts" for this application, please submit any corrections to this Filing Receipt with your reply to the Notice. When the USPTO processes the reply to the Notice, the USPTO will generate another Filing Receipt incorporating the requested corrections (if appropriate).**

Applicant(s)

Donald J. Stavely, Windsor, CO;
Ted B. Ziemkowski, Loveland, CO;
Matthew Flach, Fort Collins, CO;
Kel D. Winters, Fort Collins, CO;

Domestic Priority data as claimed by applicant

Foreign Applications

If Required, Foreign Filing License Granted: 01/02/2004

Projected Publication Date: 01/20/2005

Non-Publication Request: No

Early Publication Request: No

Title

Information management system and method

Preliminary Class

382

LICENSE FOR FOREIGN FILING UNDER
Title 35, United States Code, Section 184
Title 37, Code of Federal Regulations, 5.11 & 5.15

GRANTED

The applicant has been granted a license under 35 U.S.C. 184, if the phrase "IF REQUIRED, FOREIGN FILING LICENSE GRANTED" followed by a date appears on this form. Such licenses are issued in all applications where the conditions for issuance of a license have been met, regardless of whether or not a license may be required as set forth in 37 CFR 5.15. The scope and limitations of this license are set forth in 37 CFR 5.15(a) unless an earlier license has been issued under 37 CFR 5.15(b). The license is subject to revocation upon written notification. The date indicated is the effective date of the license, unless an earlier license of similar scope has been granted under 37 CFR 5.13 or 5.14.

This license is to be retained by the licensee and may be used at any time on or after the effective date thereof unless it is revoked. This license is automatically transferred to any related applications(s) filed under 37 CFR 1.53(d). This license is not retroactive.

The grant of a license does not in any way lessen the responsibility of a licensee for the security of the subject matter as imposed by any Government contract or the provisions of existing laws relating to espionage and the national security or the export of technical data. Licensees should apprise themselves of current regulations especially with respect to certain countries, of other agencies, particularly the Office of Defense Trade Controls, Department of State (with respect to Arms, Munitions and Implements of War (22 CFR 121-128)); the Office of Export Administration, Department of Commerce (15 CFR 370.10 (j)); the Office of Foreign Assets Control, Department of Treasury (31 CFR Parts 500+) and the Department of Energy.

NOT GRANTED

No license under 35 U.S.C. 184 has been granted at this time, if the phrase "IF REQUIRED, FOREIGN FILING LICENSE GRANTED" DOES NOT appear on this form. Applicant may still petition for a license under 37 CFR 5.12, if a license is desired before the expiration of 6 months from the filing date of the application. If 6 months has lapsed from the filing date of this application and the licensee has not received any indication of a secrecy order under 35 U.S.C. 181, the licensee may foreign file the application pursuant to 37 CFR 5.15(b).

UNITED STATES PATENT AND TRADEMARK OFFICE

COMMISSIONER FOR PATENTS
UNITED STATES PATENT AND TRADEMARK OFFICE
P.O. BOX 1450
ALEXANDRIA, VA 22313-1450
www.uspto.gov

Paper No.

John T. Peoples
14 Blue Jay Court
Warren, NJ 07059

MAILED

APR 0 4 2005

Technology Center 2100

In re Application of:
Bhasakarpillai Gopinath
Application No. 10/619,245
Filed: July 14, 2003
For: ON-DEMAND PROVISIONING OF A SET OF SERVICES TO INTERCONNECT A GROUP OF PARTICIPANTS

DECISION ON REQUEST TO WITHDRAW AS ATTORNEY OR AGENT

This is a decision on the Request To Withdraw from Representation filed January 24, 2005.

A grantable request to withdraw as attorney of record should indicate thereon the present mailing addresses of the attorney(s) who is/are withdrawing from the record and of the applicant. The request for withdrawal must be signed by every attorney seeking to withdraw or contain a clear indication that one attorney is signing on behalf of another/others. A request to withdraw will not be approved unless at least 30 (thirty) days would remain between the date of approval and the later of the expiration date of a time to file a response or the expiration date of the maximum time period which can be extended under 37 C.F.R. § 1. 136(a). The effective date of withdrawal being the date of decision and not the date of request. See M.P.E.P. § 402.06. 37 C.F.R. § 1.36 further requires that the applicant or patent owner be notified of the withdrawal of the attorney or agent.

There is no indication that Applicant has been notified of the request for withdrawal.

Accordingly, the request is **DENIED**.

All future communications from the United States Patent and Trademark Office (Office) will continue to be directed to the above-listed address until otherwise notified by applicant. Applicant is reminded of the obligation to promptly notify the Office of any change in correspondence address to ensure receipt of all communications from the Office.

James R. Matthews

Vincent N. Trans
Special Program Examiner
Technology Center 2100
Computer Architecture, Software, and
Information Security
(571) 272-3613

UNITED STATES PATENT AND TRADEMARK OFFICE

Commissioner for Patents
United States Patent and Trademark Office
P.O. Box 1450
Alexandria, VA 22313-1450
www.uspto.gov

JOHN T. PEOPLES
14 BLUE JAY COURT
WARREN, NJ 07059

COPY MAILED
APR 2 8 2006
OFFICE OF PETITIONS

In re Application of	:	
Bhaskarpillai Gopinath	:	
Application No. 10/619,245	:	DECISION ON PETITION
Filed: July 14, 2003	:	TO WITHDRAW
Attorney Docket No. Gopinath Case 10 - Contin	:	FROM RECORD
	:	

This is a decision on the Request to Withdraw as attorney or agent of record under 37 C.F.R. § 1.36(b), filed July 5, 2005.

The request is **APPROVED**.

A grantable request to withdraw as attorney/agent of record must be signed by every attorney/agent seeking to withdraw or contain a clear indication that one attorney is signing on behalf of another/others. A request to withdraw will not be approved unless at least 30 (thirty) days would remain between the date of approval and the later of the expiration date of a time to file a response or the expiration date of the maximum time period which can be extended under 37 C.F.R. § 1.136(a).

The request was signed by John T. Peoples, the sole attorney of record. Applicant is reminded that there is no attorney of record at this time.

The correspondence address of record has been changed and the new correspondence address is the address indicated below.

There is an outstanding Office action mailed January 4, 2006 that requires a reply from the applicant.

Telephone inquiries concerning this decision should be directed to Irvin Dingle at (571) 272-3210.

Denise Pothier
Petitions Examiner
Office of Petitions

cc: Bhaskarpillai Gopinath
255 Old New Brunswick Road
Suite N320
Piscataway, NJ 08854

UNITED STATES PATENT AND TRADEMARK OFFICE

Commissioner for Patents
United States Patent and Trademark Office
P.O. Box 1450
Alexandria, VA 22313-1450
www.uspto.gov

MAILED

AUG 3 1 2005
Director's Office
Group 3700

Wood, Herron & Evans, L.L.P.
2700 Carew Tower
Cincinnati, Ohio 45202

In re Application of	:	
Paul Chahine, et al.	:	
Serial No. 10/619,251	:	DECISION ON PETITION
Filed: July 14, 2003	:	TO MAKE SPECIAL
For: FLEXIBLE SINER AIR GAP PIPE	:	

Applicant's petition, filed July 02, 2004, seeks to have this application made special pursuant to the Accelerated Examination Program. The petition is GRANTED.

The petition has been reviewed and is found to be in compliance with the requirements for special status as set forth in Section 708.02(VIII) of the Manual of Patent Examining Procedures (MPEP).

Applicant is advised that the examiner's search will be restricted to the subject matter encompassed by the claims. In the event that the application receives a first action rejection, applicant is encouraged to arrange for an interview with the examiner, and to provide the examiner with a working copy of any proposed amendment one working day prior to the interview. Any amendment filed in response to a first action rejection, which would require broadening of the field of search will be treated as an improper response.

PETITION GRANTED.

Richard A. Bertsch

Richard A. Bertsch, Director
Technology Center 3700
571-272-3750

rt/ 8/29/05

UNITED STATES PATENT AND TRADEMARK OFFICE

Commissioner for Patents
United States Patent and Trademark Office
P.O. Box 1450
Alexandria, VA 22313-1450
www.uspto.gov

JOHN DODDS
DODDS AND ASSOCIATES
1707 N STREET NW
WASHINGTON, DC 20036

COPY MAILED

DEC 20 2004

OFFICE OF PETITIONS

In re Application of :
Timo Kalevi Korpela et al :
Application No. 10/619,256 :
Filed: July 14, 2003 :
Attorney Docket No. Korpela 1 :

ON PETITION

This is a decision on the petition under 37 CFR 1.137(b), filed November 17, 2004, to revive the above-identified application.

The petition is **GRANTED**.

The above-identified application became abandoned for failure to reply in a timely manner to the Notice to File Missing Parts of Application (Notice) mailed October 22, 2003. The Notice set a period for reply of two (2) months from the mail date of the Notice. No extensions of time under the provisions of 37 CFR 1.136(a) were obtained. Accordingly, the above-identified application became abandoned on December 23, 2003.

Telephone inquiries concerning this decision should be directed to Irvin Dingle at (571) 272-3210.

The application is being forwarded to Technology Center AU 1646 for further processing.

Irvin Dingle
Petitions Examiner
Office of Petitions
Office of the Deputy Commissioner
for Patent Examination Policy

UNITED STATES PATENT AND TRADEMARK OFFICE

COMMISSIONER FOR PATENTS
UNITED STATES PATENT AND TRADEMARK OFFICE
P.O. BOX 1450
ALEXANDRIA, VA 22313-1450
www.uspto.gov

WOOD, PHILLIPS, KATZ, CLARK & MORTIMER
500 W. MADISON STREET
SUITE 3800
CHICAGO, IL 60661

COPY MAILED

DEC 21 2004

OFFICE OF PETITIONS

In re Application of	:	
Jan Erik Jansson	:	
Application No. 10/619,274	:	ON PETITION
Filed: July 14, 2003	:	
Attorney Docket No. SOI8226P0111US	:	

This is a decision on the petition, filed December 15, 2004, under 37 CFR 1.313(c)(2) to withdraw the above-identified application from issue after payment of the issue fee.

The petition is **GRANTED**.

The above-identified application is withdrawn from issue for consideration of a submission under 37 CFR 1.114 (request for continued examination). See 37 CFR 1.313(c)(2).

Petitioner is advised that the issue fee paid on November 8, 2004, in the above-identified application cannot be refunded. If, however, the above-identified application is again allowed, petitioner may request that it be applied towards the issue fee required by the new Notice of Allowance. [1]

Telephone inquiries relating to this decision should be directed to the undersigned at (571) 272-3204.

The application is being referred to Technology Center AU 3673 for further processing of the request for continued examination under 37 CFR 1.114 filed December 15, 2004.

Sherry D. Brinkley
Petitions Examiner
Office of Petitions
Office of the Deputy Commissioner
for Patent Examination Policy

[1]The request to apply the issue fee to the new Notice may be satisfied by completing and returning the new Issue Fee Transmittal Form PTOL-85(b), which includes the following language thereon: "Commissioner for Patents is requested to apply the Issue Fee and Publication Fee (if any) or re-apply any previously paid issue fee to the application identified above." Petitioner is advised that, whether a fee is indicated as being due or not, the Issue Fee Transmittal Form **must** be completed and timely submitted to avoid abandonment. Note the language in bold text on the first page of the Notice of Allowance and Fee(s) Due (PTOL-85).

UNITED STATES PATENT AND TRADEMARK OFFICE

Commissioner for Patents
United States Patent and Trademark Office
P.O. Box 1450
Alexandria, VA 22313-1450
www.uspto.gov

COPY MAILED

APR 16 2007

OFFICE OF PETITIONS

Wolf, Greenfield & Sacks, P.C.
Federal Reserve Plaza
600 Atlantic Avenue
Boston, Massachusetts 02210-2206

In re Application of
Krieg
Application No. 10/619,279
Filed: July 14, 2003
Attorney Docket No.1039.70077US00

: DECISION DISMISS PETITION

This decision is in response to Applicant's "APPLICATION FOR PATENT TERM ADJUSTMENT" TIMELY filed on February 26, 2007 requesting that the Office adjust the PTA determination at the time of the mailing of the notice of issuance from a determination of 525 days to a determination of 580.

Applicant's application for PTA is **DISMISSED.**

Applicant asserts that the Office erred in assessing a fifty-five day reduction under 37 CFR 1.704(c)(8) for the submission of an amendment after the response to the election/restriction requirement but prior to the Office submitting an addition action under 35 U.S.C. 132. Applicants assert that they filed a preliminary amendment and should not be considered a supplemental response.

A review of the file reflects that applicants' arguments are not persuasive. The Office notes that the mailing of an election or restriction requirement is an notification within the meaning of 35 U.S.C. 132 and therefore the requirement of 35 U.S.C. 1.702(a)(1) is met. See MPEP 2731 (2700-13). Accordingly, the fourteen-month clock has stopped. Applicants have three months to respond the election or restriction requirement without any PTA reduction regardless of the fact that the shortened statutory period (ssp) has been set at one month. See 37 CFR 1.704(b). However, applicants do not have three months to have as many responses or other papers such as IDS or amendments considered without PTA reduction. An amendment or IDS submitted after reply to the election/restriction requirement but prior to the Office submitting an Office action is considered a supplemental paper for PTA purposes pursuant to 37 CFR 1.704(c)(8). [1] Accordingly, the fifty-five (55) day reduction is proper. Overall, the amount of PTA at the time of the mailing of the notice of allowance is 525 days. Office delays are 568 days under 35 U.S.C. 1.702(a)(1) and 12 days under 37 CFR 1.702(a)(2). Applicant delay is 55 days under 37 CFR 1.704(c)(8).

---

[1]The delay beginning on the day after the initial response is filed and ending on the date of the supplemental paper. The delay began on May 10, 2006 and ended on July 3, 2006.

After the mailing of this decision, the Office will forward this application to the Office of Patent Publication for a prompt issuance of the patent. Any delays pursuant to 37 CFR 1.702(a)(4) and 37 CFR 1.702(b) will be added to the patent term adjustment at the time of the issuance of the patent and will be reflected in the issue notification letter that is mailed to applicant approximately three weeks prior to the issuance of the patent. Applicants disputing the determinations under 37 CFR 1.702(a)(4) or 37 CFR 1.704(b) will have two months after the issuance of the patent to contest such determination. See 37 CFR 1.705(d).

The Office has assessed the $200.00 fee. No additional fees are required in this deciding this application.

Any questions concerning this decision should be directed to Kery Fries, Senior Legal Advisor, Office of Patent Legal Administration, Office of Deputy Commissioner for Patent Examination Policy, at 571-272-7757.

Kery A. Fries

Kery Fries
Senior Legal
Office of Patent Legal Administration
Office of Deputy Commissioner
For Patent Examination Policy

UNITED STATES PATENT AND TRADEMARK OFFICE

UNITED STATES DEPARTMENT OF COMMERCE
United States Patent and Trademark Office
Address: COMMISSIONER FOR PATENTS
P.O. Box 1450
Alexandria, Virginia 22313-1450
www.uspto.gov

COATS & BENNETT, PLLC
1400 Crescent Green, Suite 300
Cary, NC 27518

Mail Date: 04/21/2010

Applicant	: James F. Rieke	: DECISION ON REQUEST FOR
Patent Number	: 7572627	: RECALCULATION of PATENT
Issue Date	: 08/11/2009	: TERM ADJUSTMENT IN VIEW
Appliction No	: 10/619,280	: OF WYETH AND NOTICE OF INTENT TO
Filed	: 07/14/2003	: ISSUE CERTIFICATE OF CORRECTION
		:

The Request for Recalculation is **GRANTED** to the extent indicated.

The patent term adjustment has been determined to be **1102** days. The USPTO will *sua sponte* issue a certificate of correction reflecting the amount of PTA days determined by the recalculation.

Prior to the issuance of the certificate of correction, the USPTO will afford patentee an opportunity to be heard and request reconsideration. Accordingly, patentee has **one month or thirty (30) days**, whichever is longer, to file a request for reconsideration of this patent term adjustment calculation. See 35 U.S.C. 154(b)(3)(B)(ii) and 37 CFR 1.322(a)(4). No extensions of time will be granted under 37 CFR 1.136.

Patentee should use document code PET.OP if electronically filing a request for reconsideration of this patent term adjustment calculation. The patentee must also include the information required by 37 CFR 1.705(b)(2) and the fee required by 37 CFR 1.18(e). If patentee does not file a timely request for reconsideration of this patent term adjustment calculation including the information required by 37 CFR 1.705(b)(2) and the fee required by 37 CFR 1.18(e), the USPTO will issue a certificate of correction reflecting the PTA determination noted above.

Patentee should be aware that in order to preserve the right to review in the United States District Court for the District of Columbia of the USPTO patent term adjustment determination, patentee must ensure that he or she also take the steps required under 35 U.S.C. 154(b)(4)(A) in a timely manner. Nothing in the request for recalculation should be construed as providing an alternative time frame for commencing a civil action under 35 U.S.C. 154(b)(4)(A).

Any questions concerning this decision should be directed to the Office of Patent Legal Administration at 571-272-7702.

UNITED STATES PATENT AND TRADEMARK OFFICE

Commissioner for Patents
United States Patent and Trademark Office
P.O. Box 1450
Alexandria, VA 22313-1450
www.uspto.gov

Nanotek Instruments Inc
9436 Parkside Dr
Centerville, OH 45458

COPY MAILED

MAY 01 2007

OFFICE OF PETITIONS

In re Application of	:	
Wen C. Huang	:	
Application No.: 10/619287	:	DECISION ON
Filing or 371(c) Date: 07/15/2003	:	PETITION
Title of Invention: DIRECT WRITE	:	
PROCESS AND APPARATUS	:	

This is a decision in response to the Petition To Withdraw Holding of Abandonment Based on Failure To Receive Office Action, filed March 7, 2007. Applicant also filed a petition to revive the application under 37 CFR 1.137(b), on April 12, 2007. A Decision on the petition to revive the application will be held in abeyance pending resolution of the petition to withdraw the holding of abandonment.

This Petition is hereby **dismissed**.

Any further petition must be submitted within TWO (2) MONTHS from the mail date of this decision. Extensions of time under 37 CFR 1.136(a) are permitted. The reconsideration request should include a cover letter entitled "Renewed Petition under [insert the applicable code section]." This is **not** final agency action within the meaning of 5 U.S.C. § 704.

The above-identified application became abandoned for failure to timely and properly reply to the Notice of Allowance and Issue Fee Due, mailed November 1, 2006. The Notice set a non-extendable three (3) month period for reply. No reply having been received, the application became abandoned on February 2, 2007. A Notice of Abandonment was mailed February 27, 2007.

Petition under 37 CFR 1.181

Applicant files the instant petition and asserts that he did not receive the Notice of Allowance and Notice of Allowability.

Applicable Law, Rules and MPEP

The MPEP 711.03(c)A, Petition To Withdraw Holding of Abandonment Based on Failure To Receive Office Action, provides

> In Delgar v. Schulyer, 172 USPQ 513 (D.D.C. 1971), the court decided that the Office should mail a new Notice of Allowance in view of the evidence presented in support of the contention that the applicant's representative did not receive the original Notice of Allowance. Under the reasoning of Delgar, an allegation that an Office action was never received may be considered in a petition to withdraw the holding of abandonment. If adequately supported, the Office may grant the petition to withdraw the holding of abandonment and remail the Office action. That is, the reasoning of Delgar is applicable regardless of whether an application is held abandoned for failure to timely pay the issue fee (35 U.S.C. 151) or for failure to prosecute (35 U.S.C. 133). To minimize costs and burdens to practitioners and the Office, the Office has modified the showing required to establish nonreceipt of an Office action. **The showing required to establish nonreceipt of an Office communication must include a statement from the practitioner stating that the Office communication was not received by the practitioner and attesting to the fact that a search of the file jacket and docket records indicates that the Office communication was not received. A copy of the docket record where the nonreceived Office communication would have been entered had it been received and docketed must be attached to and referenced in practitioner's statement.** For example, if a three month period for reply was set in the nonreceived Office action, a copy of the docket report showing all replies docketed for a date three months from the mail date of the nonreceived Office action must be submitted as documentary proof of nonreceipt of the Office action. The showing outlined above may not be sufficient if there are circumstances that point to a conclusion that the Office action may have been lost after receipt rather than a conclusion that the Office action was lost in the mail (e.g., if the practitioner has a history of not receiving Office actions). (Emphasis supplied)

MPEP 711.03(c)

Analysis

Applicant has failed to demonstrate that the office action was not received. Applicant must, in addition to stating that the Notices were not received, also state that a search of his file jacket and docket records reveals that the Notices were not received, and provide a copy of the file jacket and docket records to this Office. The petition is dismissed without prejudice. Applicant should file a Request for Reconsideration of Petition and include the necessary statements and copies of docket records and file jacket.

Further correspondence with respect to this matter should be addressed as follows:

By mail: Commissioner for Patents
PO Box 1450
Alexandria, VA 22313-1450

By FAX: (571) 273-8300
Attn: Office of Petitions

By hand: Customer Service Window
Randolph Building
401 Dulany Street
Alexandria, VA 22314

Telephone inquiries concerning this matter should be directed to the undersigned at (571) 272-3232.

Derek L. Woods
Attorney
Office of Petitions

UNITED STATES PATENT AND TRADEMARK OFFICE

Commissioner for Patents
United States Patent and Trademark Office
P.O. Box 1450
Alexandria, VA 22313-1450
www.uspto.gov

Nanotek Instruments Inc
9436 Parkside Dr
Centerville, OH 45458

COPY MAILED

AUG 0 9 2007

OFFICE OF PETITIONS

In re Application of Wen C. Huang Application No.: 10/619287 Filing or 371(c) Date: 07/15/2003 Title of Invention: DIRECT WRITE PROCESS AND APPARATUS	: : : : : :	DECISION ON PETITION

This is a decision in response to the Renewed Petition Under MPEP 711.03(c)II and 37 CFR § 1.181 to Withdraw Holding of Abandonment Based on Failure To Receive Office Action, filed June 21, 2007, and on the petition to revive the application under 37 CFR 1.137(b), filed April 12, 2007.

This Petition under 37 CFR § 1.181 is hereby **granted**.

This Petition under 37 CFR 1.137(b) is hereby **dismissed as moot**.

Background

The above-identified application became abandoned for failure to timely and properly reply to the Notice of Allowance and Issue Fee Due, mailed November 1, 2006. The Notice set a non-extendable three (3) month period for reply. No reply having been received, the application became abandoned on February 2, 2007. A Notice of Abandonment was mailed February 27, 2007.

The present petition

With the present renewed petition, Applicant has demonstrated non-receipt of the Notice by a preponderance of the evidence. Applicant has also filed the issue and publication fees.

In view of the foregoing, the petition is granted. The holding of abandonment is hereby withdrawn.

No petition fee has been charged and none is due. A refund of the petition fee for the petition under 37 CFR 1.137(b) has been scheduled via Treasury Check.

The application will be referred to publishing division for processing into a patent.

A copy of the Notice of Allowance and Issue Fee Due and Notice of Allowability are enclosed herewith.

Telephone inquiries concerning this matter should be directed to the undersigned at (571) 272-3232.

Derek L. Woods
Attorney
Office of Petitions

Enclosures: Notice of Allowance and Issue Fee Due and Notice of Allowability

UNITED STATES PATENT AND TRADEMARK OFFICE

UNITED STATES DEPARTMENT OF COMMERCE
United States Patent and Trademark Office
Address: COMMISSIONER FOR PATENTS
P.O. Box 1450
Alexandria, Virginia 22313-1450
www.uspto.gov

NOTICE OF ALLOWANCE AND FEE(S) DUE

7590 11/01/2006

Nanotek Instruments Inc
9436 Parkside Dr
Centerville, OH 45458

EXAMINER
KASENGE, CHARLES R

ART UNIT	PAPER NUMBER
2125	

DATE MAILED: 11/01/2006

APPLICATION NO.	FILING DATE	FIRST NAMED INVENTOR	ATTORNEY DOCKET NO.	CONFIRMATION NO.
10/619,287	07/15/2003	Wen C. Huang		9971

TITLE OF INVENTION: DIRECT WRITE PROCESS AND APPARATUS

APPLN. TYPE	SMALL ENTITY	ISSUE FEE DUE	PUBLICATION FEE DUE	PREV. PAID ISSUE FEE	TOTAL FEE(S) DUE	DATE DUE
nonprovisional	YES	$700	$300	$0	$1000	02/01/2007

THE APPLICATION IDENTIFIED ABOVE HAS BEEN EXAMINED AND IS ALLOWED FOR ISSUANCE AS A PATENT. PROSECUTION ON THE MERITS IS CLOSED. THIS NOTICE OF ALLOWANCE IS NOT A GRANT OF PATENT RIGHTS. THIS APPLICATION IS SUBJECT TO WITHDRAWAL FROM ISSUE AT THE INITIATIVE OF THE OFFICE OR UPON PETITION BY THE APPLICANT. SEE 37 CFR 1.313 AND MPEP 1308.

THE ISSUE FEE AND PUBLICATION FEE (IF REQUIRED) MUST BE PAID WITHIN THREE MONTHS FROM THE MAILING DATE OF THIS NOTICE OR THIS APPLICATION SHALL BE REGARDED AS ABANDONED. THIS STATUTORY PERIOD CANNOT BE EXTENDED. SEE 35 U.S.C. 151. THE ISSUE FEE DUE INDICATED ABOVE DOES NOT REFLECT A CREDIT FOR ANY PREVIOUSLY PAID ISSUE FEE IN THIS APPLICATION. IF AN ISSUE FEE HAS PREVIOUSLY BEEN PAID IN THIS APPLICATION (AS SHOWN ABOVE), THE RETURN OF PART B OF THIS FORM WILL BE CONSIDERED A REQUEST TO REAPPLY THE PREVIOUSLY PAID ISSUE FEE TOWARD THE ISSUE FEE NOW DUE.

HOW TO REPLY TO THIS NOTICE:

I. Review the SMALL ENTITY status shown above.

If the SMALL ENTITY is shown as YES, verify your current SMALL ENTITY status:

A. If the status is the same, pay the TOTAL FEE(S) DUE shown above.

B. If the status above is to be removed, check box 5b on Part B - Fee(s) Transmittal and pay the PUBLICATION FEE (if required) and twice the amount of the ISSUE FEE shown above, or

If the SMALL ENTITY is shown as NO:

A. Pay TOTAL FEE(S) DUE shown above, or

B. If applicant claimed SMALL ENTITY status before, or is now claiming SMALL ENTITY status, check box 5a on Part B - Fee(s) Transmittal and pay the PUBLICATION FEE (if required) and 1/2 the ISSUE FEE shown above.

II. PART B - FEE(S) TRANSMITTAL, or its equivalent, must be completed and returned to the United States Patent and Trademark Office (USPTO) with your ISSUE FEE and PUBLICATION FEE (if required). If you are charging the fee(s) to your deposit account, section "4b" of Part B - Fee(s) Transmittal should be completed and an extra copy of the form should be submitted. If an equivalent of Part B is filed, a request to reapply a previously paid issue fee must be clearly made, and delays in processing may occur due to the difficulty in recognizing the paper as an equivalent of Part B.

III. All communications regarding this application must give the application number. Please direct all communications prior to issuance to Mail Stop ISSUE FEE unless advised to the contrary.

IMPORTANT REMINDER: Utility patents issuing on applications filed on or after Dec. 12, 1980 may require payment of maintenance fees. It is patentee's responsibility to ensure timely payment of maintenance fees when due.

PTOL-85 (Rev. 07/06) Approved for use through 04/30/2007.

PART B - FEE(S) TRANSMITTAL

Complete and send this form, together with applicable fee(s), to: Mail **Mail Stop ISSUE FEE**
Commissioner for Patents
P.O. Box 1450
Alexandria, Virginia 22313-1450
or Fax (571)-273-2885

INSTRUCTIONS: This form should be used for transmitting the ISSUE FEE and PUBLICATION FEE (if required). Blocks 1 through 5 should be completed where appropriate. All further correspondence including the Patent, advance orders and notification of maintenance fees will be mailed to the current correspondence address as indicated unless corrected below or directed otherwise in Block 1, by (a) specifying a new correspondence address; and/or (b) indicating a separate "FEE ADDRESS" for maintenance fee notifications.

CURRENT CORRESPONDENCE ADDRESS (Note: Use Block 1 for any change of address)

7590 11/01/2006

Nanotek Instruments Inc
9436 Parkside Dr
Centerville, OH 45458

Note: A certificate of mailing can only be used for domestic mailings of the Fee(s) Transmittal. This certificate cannot be used for any other accompanying papers. Each additional paper, such as an assignment or formal drawing, must have its own certificate of mailing or transmission.

Certificate of Mailing or Transmission
I hereby certify that this Fee(s) Transmittal is being deposited with the United States Postal Service with sufficient postage for first class mail in an envelope addressed to the Mail Stop ISSUE FEE address above, or being facsimile transmitted to the USPTO (571) 273-2885, on the date indicated below.

(Depositor's name)
(Signature)
(Date)

APPLICATION NO.	FILING DATE	FIRST NAMED INVENTOR	ATTORNEY DOCKET NO.	CONFIRMATION NO.
10/619,287	07/15/2003	Wen C. Huang		9971

TITLE OF INVENTION: DIRECT WRITE PROCESS AND APPARATUS

APPLN. TYPE	SMALL ENTITY	ISSUE FEE DUE	PUBLICATION FEE DUE	PREV. PAID ISSUE FEE	TOTAL FEE(S) DUE	DATE DUE
nonprovisional	YES	$700	$300	$0	$1000	02/01/2007

EXAMINER	ART UNIT	CLASS-SUBCLASS
KASENGE, CHARLES R	2125	700-121000

1. Change of correspondence address or indication of "Fee Address" (37 CFR 1.363).
- ☐ Change of correspondence address (or Change of Correspondence Address form PTO/SB/122) attached.
- ☐ "Fee Address" indication (or "Fee Address" Indication form PTO/SB/47; Rev 03-02 or more recent) attached. **Use of a Customer Number is required.**

2. For printing on the patent front page, list
(1) the names of up to 3 registered patent attorneys or agents OR, alternatively,
(2) the name of a single firm (having as a member a registered attorney or agent) and the names of up to 2 registered patent attorneys or agents. If no name is listed, no name will be printed.

1 _____
2 _____
3 _____

3. ASSIGNEE NAME AND RESIDENCE DATA TO BE PRINTED ON THE PATENT (print or type)

PLEASE NOTE: Unless an assignee is identified below, no assignee data will appear on the patent. If an assignee is identified below, the document has been filed for recordation as set forth in 37 CFR 3.11. Completion of this form is NOT a substitute for filing an assignment.

(A) NAME OF ASSIGNEE (B) RESIDENCE: (CITY and STATE OR COUNTRY)

Please check the appropriate assignee category or categories (will not be printed on the patent) : ☐ Individual ☐ Corporation or other private group entity ☐ Government

4a. The following fee(s) are submitted:
- ☐ Issue Fee
- ☐ Publication Fee (No small entity discount permitted)
- ☐ Advance Order - # of Copies _____

4b. Payment of Fee(s): **(Please first reapply any previously paid issue fee shown above)**
- ☐ A check is enclosed.
- ☐ Payment by credit card. Form PTO-2038 is attached.
- ☐ The Director is hereby authorized to charge the required fee(s), any deficiency, or credit any overpayment, to Deposit Account Number _____ (enclose an extra copy of this form).

5. **Change in Entity Status** (from status indicated above)
- ☐ a. Applicant claims SMALL ENTITY status. See 37 CFR 1.27.
- ☐ b. Applicant is no longer claiming SMALL ENTITY status. See 37 CFR 1.27(g)(2).

NOTE: The Issue Fee and Publication Fee (if required) will not be accepted from anyone other than the applicant; a registered attorney or agent; or the assignee or other party in interest as shown by the records of the United States Patent and Trademark Office.

Authorized Signature _____ Date _____

Typed or printed name _____ Registration No. _____

This collection of information is required by 37 CFR 1.311. The information is required to obtain or retain a benefit by the public which is to file (and by the USPTO to process) an application. Confidentiality is governed by 35 U.S.C. 122 and 37 CFR 1.14. This collection is estimated to take 12 minutes to complete, including gathering, preparing, and submitting the completed application form to the USPTO. Time will vary depending upon the individual case. Any comments on the amount of time you require to complete this form and/or suggestions for reducing this burden, should be sent to the Chief Information Officer, U.S. Patent and Trademark Office, U.S. Department of Commerce, P.O. Box 1450, Alexandria, Virginia 22313-1450. DO NOT SEND FEES OR COMPLETED FORMS TO THIS ADDRESS. SEND TO: Commissioner for Patents, P.O. Box 1450, Alexandria, Virginia 22313-1450.

Under the Paperwork Reduction Act of 1995, no persons are required to respond to a collection of information unless it displays a valid OMB control number.

UNITED STATES PATENT AND TRADEMARK OFFICE

UNITED STATES DEPARTMENT OF COMMERCE
United States Patent and Trademark Office
Address: COMMISSIONER FOR PATENTS
P.O. Box 1450
Alexandria, Virginia 22313-1450
www.uspto.gov

APPLICATION NO.	FILING DATE	FIRST NAMED INVENTOR	ATTORNEY DOCKET NO.	CONFIRMATION NO.
10/619,287	07/15/2003	Wen C. Huang		9971

7590 11/01/2006

Nanotek Instruments Inc
9436 Parkside Dr
Centerville, OH 45458

EXAMINER
KASENGE, CHARLES R

ART UNIT	PAPER NUMBER
2125	

DATE MAILED: 11/01/2006

Determination of Patent Term Adjustment under 35 U.S.C. 154 (b)
(application filed on or after May 29, 2000)

The Patent Term Adjustment to date is 741 day(s). If the issue fee is paid on the date that is three months after the mailing date of this notice and the patent issues on the Tuesday before the date that is 28 weeks (six and a half months) after the mailing date of this notice, the Patent Term Adjustment will be 741 day(s).

If a Continued Prosecution Application (CPA) was filed in the above-identified application, the filing date that determines Patent Term Adjustment is the filing date of the most recent CPA.

Applicant will be able to obtain more detailed information by accessing the Patent Application Information Retrieval (PAIR) WEB site (http://pair.uspto.gov).

Any questions regarding the Patent Term Extension or Adjustment determination should be directed to the Office of Patent Legal Administration at (571)-272-7702. Questions relating to issue and publication fee payments should be directed to the Customer Service Center of the Office of Patent Publication at 1-(888)-786-0101 or (571)-272-4200.

PTOL-85 (Rev. 07/06) Approved for use through 04/30/2007.

Notice of Allowability	Application No.	Applicant(s)	
	10/619,287	HUANG, WEN C.	
	Examiner	Art Unit	
	Charles R. Kasenge	2125	

-- The MAILING DATE of this communication appears on the cover sheet with the correspondence address--

All claims being allowable, PROSECUTION ON THE MERITS IS (OR REMAINS) CLOSED in this application. If not included herewith (or previously mailed), a Notice of Allowance (PTOL-85) or other appropriate communication will be mailed in due course. **THIS NOTICE OF ALLOWABILITY IS NOT A GRANT OF PATENT RIGHTS.** This application is subject to withdrawal from issue at the initiative of the Office or upon petition by the applicant. See 37 CFR 1.313 and MPEP 1308.

1. ☒ This communication is responsive to *communication filed 10/13/06*.

2. ☒ The allowed claim(s) is/are *1-42*.

3. ☐ Acknowledgment is made of a claim for foreign priority under 35 U.S.C. § 119(a)-(d) or (f).
   a) ☐ All b) ☐ Some* c) ☐ None of the:
      1. ☐ Certified copies of the priority documents have been received.
      2. ☐ Certified copies of the priority documents have been received in Application No. _____ .
      3. ☐ Copies of the certified copies of the priority documents have been received in this national stage application from the International Bureau (PCT Rule 17.2(a)).

   * Certified copies not received: _____.

Applicant has THREE MONTHS FROM THE "MAILING DATE" of this communication to file a reply complying with the requirements noted below. Failure to timely comply will result in ABANDONMENT of this application.
THIS THREE-MONTH PERIOD IS NOT EXTENDABLE.

4. ☐ A SUBSTITUTE OATH OR DECLARATION must be submitted. Note the attached EXAMINER'S AMENDMENT or NOTICE OF INFORMAL PATENT APPLICATION (PTO-152) which gives reason(s) why the oath or declaration is deficient.

5. ☐ CORRECTED DRAWINGS (as "replacement sheets") must be submitted.
   (a) ☐ including changes required by the Notice of Draftsperson's Patent Drawing Review (PTO-948) attached
      1) ☐ hereto or 2) ☐ to Paper No./Mail Date _____.
   (b) ☐ including changes required by the attached Examiner's Amendment / Comment or in the Office action of Paper No./Mail Date _____.

   Identifying indicia such as the application number (see 37 CFR 1.84(c)) should be written on the drawings in the front (not the back) of each sheet. Replacement sheet(s) should be labeled as such in the header according to 37 CFR 1.121(d).

6. ☐ DEPOSIT OF and/or INFORMATION about the deposit of BIOLOGICAL MATERIAL must be submitted. Note the attached Examiner's comment regarding REQUIREMENT FOR THE DEPOSIT OF BIOLOGICAL MATERIAL.

Attachment(s)

1. ☐ Notice of References Cited (PTO-892)
2. ☐ Notice of Draftperson's Patent Drawing Review (PTO-948)
3. ☐ Information Disclosure Statements (PTO/SB/08), Paper No./Mail Date _____
4. ☐ Examiner's Comment Regarding Requirement for Deposit of Biological Material
5. ☐ Notice of Informal Patent Application
6. ☐ Interview Summary (PTO-413), Paper No./Mail Date _____ .
7. ☐ Examiner's Amendment/Comment
8. ☒ Examiner's Statement of Reasons for Allowance
9. ☐ Other _____.

DETAILED ACTION

Response to Arguments

1. Applicant's arguments, see Remarks, filed 10/13/06, with respect to claim 32 have been fully considered and are persuasive. The rejection of the claims has been withdrawn.

Allowable Subject Matter

2. Claims 1-42 are allowed.

3. The following is an examiner's statement of reasons for allowance: The prior art of record does not disclose a fluid material delivery assembly comprising a chamber at a distance from said support member for containing a precursor fluid material under a substantially constant but adjustable pressure differential relative to the ambient pressure. The allowability, at least in part, resides in this fact.

Any comments considered necessary by applicant must be submitted no later than the payment of the issue fee and, to avoid processing delays, should preferably accompany the issue fee. Such submissions should be clearly labeled "Comments on Statement of Reasons for Allowance."

Conclusion

Any inquiry concerning this communication or earlier communications from the examiner should be directed to Charles R. Kasenge whose telephone number is 571 272-3743. The examiner can normally be reached on Monday through Friday, 8:30 - 5 pm.

If attempts to reach the examiner by telephone are unsuccessful, the examiner's supervisor, Leo Picard can be reached on 571 272-3749. The fax phone number for the organization where this application or proceeding is assigned is 571-273-8300.

Information regarding the status of an application may be obtained from the Patent Application Information Retrieval (PAIR) system. Status information for published applications may be obtained from either Private PAIR or Public PAIR. Status information for unpublished applications is available through Private PAIR only. For more information about the PAIR system, see http://pair-direct.uspto.gov. Should you have questions on access to the Private PAIR system, contact the Electronic Business Center (EBC) at 866-217-9197 (toll-free). If you would like assistance from a USPTO Customer Service Representative or access to the automated information system, call 800-786-9199 (IN USA OR CANADA) or 571-272-1000.

CK
October 26, 2006

LEO PICARD
SUPERVISORY PATENT EXAMINER
TECHNOLOGY CENTER 2100

SPE RESPONSE FOR CERTIFICATE OF CORRECTION

Paper No.: _____

DATE : 6-13-06

TO SPE OF : ART UNIT 2828

SUBJECT : Request for Certificate of Correction for Appl. No.: 10/619303 Patent No.: 7012940

Please respond to this request for a certificate of correction within 7 days.

Please review the requested changes/corrections as shown in the **COCIN** document(s) in the IFW application image. No new matter should be introduced, nor should the scope or meaning of the claims be changed.

Check Columns

Please complete the response (see below) and forward the completed response to scanning using document code **COCX**.

Certificates of Correction Branch

703-308-9390 ext. 117

Thank You For Your Assistance

The request for issuing the above-identified correction(s) is hereby:

Note your decision on the appropriate box.

- [X] **Approved** — All changes apply.
- [ ] **Approved in Part** — Specify below which changes **do not** apply.
- [ ] **Denied** — State the reasons for denial below.

Comments: _____

MINSUN OH HARVEY
PRIMARY SPE

2828
Art Unit

UNITED STATES PATENT AND TRADEMARK OFFICE

COMMISSIONER FOR PATENTS
UNITED STATES PATENT AND TRADEMARK OFFICE
P.O. BOX 1450
ALEXANDRIA, VA 22313-145

MAILED

FEB 26 2004

Office of the Director
Group 3600

Richard M. Klein
Fay Sharpe et al.
Seventh Floor
1100 Superior Avenue
Cleveland, OH 44114

In re application of
Michael Haytas
Application No. 10/619,309 :
Filed: July 14, 2003 :
For: MANIPULABLE FOAM MAT WITH MAGNETIC BACKING :

DECISION ON REQUEST FOR WITHDRAWAL OF ATTORNEY

This is a decision on the renewed request filed on October 16, 2003, under 37 CFR 1.36 and MPEP 402.06, requesting permission to withdraw as the attorney of record in the above-identified application.

The request is **NOT APPROVED**.

Under 37 CFR 1.36 an attorney may withdraw only upon application to and approval by the Commissioner. It should be noted that a withdrawal is effective when approved, not when filed. Besides giving due notice to his or her client and delivering to the client all papers and property to which the client is entitled as specified under 37 CFR 10.40, approval of such a request requires that the following conditions be met:

A) Each attorney of record must sign the notice of withdrawal, or the notice must contain a clear indication of one attorney signing on behalf of another, because the Office does not recognize law firms;

B) A proper reason for the withdrawal as enumerated in 37 CFR 10.40(b) or subsection (1)-(6) of 37 CFR 10.40(c) must be provided; and

C) If withdrawal is requested in accordance with 37 CFR 10.40(c) above, there must be at least 30 days between approval of the withdrawal and the later of the expiration date of a time period for reply or the expiration date of the period which can be obtained by a petition and fee for extension of time under 37 CFR 1.136(a).

The request to withdraw as attorney is not accepted in the above-identified application because the request lacks conditions A) and B) above.

As to condition A), the attorneys associated with Customer Number 03562 do not correspond with those named in the Power of Attorney in the declaration, thereby creating confusion as to who is withdrawing. To alleviate this problem, it is suggested that the request be resubmitted and that such request specifically state that the signing attorney is signing on behalf of all attorneys of record in this application.

As to condition B), a proper reason for the withdrawal as enumerated in 37 CFR 10.40(b) or subsection (1)-(6) of 37 CFR 10.40(c) is not provided.

Randolph A. Reese
Special Programs Examiner
Patent Technology Center 3600
(703) 308-2121

RAR/mjz: 2/13/04

UNITED STATES PATENT AND TRADEMARK OFFICE

Commissioner for Patents
United States Patent and Trademark Office
P.O. Box 1450
Alexandria, VA 22313-1450
www.uspto.gov

JUL 22 2005

RICHARD M. KLEIN
FAY SHARPE et al.
SEVENTH FLOOR
1100 SUPERIOR AVENUE
CLEVELAND, OH 44114

In re application of Michael Haytas Application No. 10/619,309 Filed: July 14, 2003 For: MANIPULABLE FOAM MAT WITH MAGNETIC BACKING	: : :	DECISION ON REQUEST FOR WITHDRAWAL OF ATTORNEY

This is a decision on the request filed on October 04, 2004, under 37 CFR 1.36 and MPEP 402.06, requesting permission to withdraw as the attorney of record in the above-identified application.

The request is **NOT APPROVED**.

Under 37 CFR 1.36 an attorney may withdraw only upon application to and approval by the Commissioner. It should be noted that a withdrawal is effective when approved, not when filed. For approval of such a request the following conditions must be met:

A) Each attorney of record must sign the notice of withdrawal, or the notice must contain a clear indication of one attorney signing on behalf of another, because the Office does not recognize law firms;
B) There must be at least 30 days between approval of the withdrawal and the later of the expiration date of a time period for reply or the expiration date of the period which can be obtained by a petition and fee for extension of time under 37 CFR 1.136(a);
C) A proper reason for the withdrawal as enumerated in 37 CFR 10.40(b) or subsection (1)-(6) of 37 CFR 10.40(c) must be provided;
D) The applicant or patent owner must have been notified of the withdrawal as provided for in 37 CFR 1.36.

10/619,309

The request to withdraw as attorney is not accepted in the above-identified application because the request lacks condition B) above.

As to condition B), No statement included in the request, does not satisfy one of the valid reasons for withdrawal under 37 CFR 10.40 (b)(1)-(4) or (c)(1)-(6).

Kenneth J. Dorner
Special Programs Examiner
Patent Technology Center 3600
(571) 272-6587

KJD/slb: 07/19/05

BEST AVAILABLE COPY

SPE RESPONSE FOR CERTIFICATE OF CORRECTION

Paper No.: _____

DATE : 8/8/06

TO SPE OF : ART UNIT 2823

SUBJECT : Request for Certificate of Correction on Patent No.: 6821818

A response is requested with respect to the accompanying request for a certificate of correction.

Please complete this form and return with file, within 7 days to:
Palm location **7580, Certificates of Correction Branch – South Tower – 9A22**
If response is for an IFW, **return to employee (named below) via PUBSCofC Team in MADRAS.**
With respect to the change(s) requested, correcting Office and/or Applicant's errors, should the patent read as shown in the certificate of correction (COCIN)? No new matter should be introduced, nor should the scope or meaning of the claims be changed.

Valerie Jackson

Thank You For Your Assistance

Certificates of Correction Branch
Tel. No. 703-308-9390 ext. 114

The request for issuing the above-identified correction(s) is hereby:
Note your decision on the appropriate box.

- [x] **Approved** — **All** changes apply.
- [ ] **Approved in Part** — Specify below which changes **do not** apply.
- [ ] **Denied** — State the reasons for denial below.

Comments:

Apparently, Pg. 3 of 3 was missed when scanning in the Oath.

Matthew A. Smith — SPE

2823 — Art Unit

U.S. DEPARTMENT OF COMMERCE Patent and Trademark Office

UNITED STATES PATENT AND TRADEMARK OFFICE

COMMISSIONER FOR PATENTS
UNITED STATES PATENT AND TRADEMARK OFFICE
P.O. BOX 1450
ALEXANDRIA, VA 22313-1450
www.uspto.gov

NUFERN
7 AIRPORT PARK ROAD
EAST GRANBY CT 06026

COPY MAILED

NOV 29 2004

OFFICE OF PETITIONS

Applicant: Farroni et al.
Appl. No.: 10/619,376
Filed: July 11, 2003
Title: OPTICAL FIBER
Attorney Docket No.: NU-202-CIP
Pub. No.: US 2004/0086245 A1
Pub. Date: May 6, 2004

This is a decision to the request for correction of patent application publication under 37 CFR 1.221(b), which was received on May 30, 2004.

The request is DISMISSED.

The instant request is that the application be republished because the patent application publication contains an error on the front page of the publication in the "Related U.S. Application Data," as the application No. 10/392,243 is listed as a continuation-in-part of application No. 10/392,064 and it should state that the instant application is a continuation-in-part of application No. 10/392,243.

37 CFR 1.221(b) is applicable "only when the Office makes a material mistake which is apparent from Office records . . . Any request for a corrected publication or revised patent application publication other than provided as provided in paragraph (a) of this section must be filed within two months from the date of the patent application publication. This period is not extendable." A material mistake must affect the public's ability to appreciate the technical disclosure of the patent application publication, to determine the scope of the patent application publication, or to determine the scope of the provisional rights that an applicant may seek to enforce upon issuance of a patent.[1]

The error on the front page of the publication is not a material error under 37 CFR 1.221(b). The error is not a material mistake because applicant did not make a proper benefit claim in compliance with 37 CFR 1.78, as the benefit claim is in multiple sentences. An amendment, a petition and fee under 37 CFR 1.78 are not required because the Office picked up the priority information and 37 CFR 1.78 as currently amended permits a benefit claim to be made in multiple

[1] Changes to Implement Eighteen-Month Publication of Patent Applications, 65 FR 57023, 57038 (Sept. 20, 2000), 1239 Off. Gaz. Pat. Office Notices 63, 75 (Oct. 10, 2000) (final rule).

sentences. The mistake does not affect the public's ability to appreciate the technical disclosure of the patent application publication, or determine the scope of the patent application publication or determine the scope of the provisional rights that an applicant may seek to enforce upon issuance of a patent.

On October 15, 2003 and January 29, 2004, Filing Receipts were mailed, which did not properly list the priority information. To avoid this type of problem in the future, applicant's representative should make request a corrected filing receipt using the facsimile number (703-746-9195) on the Filing Receipt.

The applicant is advised that a "request for republication of an application previously published" may be filed under 37 CFR 1.221(a). Such a request for republication "must include a copy of the application in compliance with the Office's electronic filing system requirements and be accompanied by the publication fee set forth in § 1.18(d) and the processing fee set forth in § 1.17(i)." If the request for republication does not comply with the electronic filing system requirements, the republication will not take place and the publication fee set forth in § 1.18(d) will be refunded. The processing fee will be retained.

Any request for republication under 37 CFR 1.221(a), must be submitted via the EFS system and questions should be addressed as follows:

By mail to: Mail Stop PGPUB
Commissioner for Patents
P.O. Box 1450
Alexandria, VA 22313-1450

By facsimile: 703-872-9306

The application will be examined in due course.

Inquiries concerning this communication should be directed to Mark Polutta at (571) 272-7709.

Mark O. Polutta
Office of Patent Legal Administration
Office of the Deputy Commissioner
for Patent Examination Policy

Enclosure: Corrected Filing Receipt

SPE RESPONSE FOR CERTIFICATE OF CORRECTION

Paper No.: _____

DATE : Aug. 5, 2008

TO SPE OF : ART UNIT 3728

SUBJECT : Request for Certificate of Correction for Appl. No 10/619376 patent no7116887

Please respond to this request for a certificate of correction within 7 days.

Please review the requested changes/corrections as shown in the **COCIN** document(s) in the IFW application image. No new matter should be introduced, nor should the scope or meaning of the claims be changed.

Please complete the response (see below) and forward the completed response to scanning using document code **COCX**

Magdalene Talley

Certificates of Correction Branch

703-308-9390 ext. 116

Thank You For Your Assistance

The request for issuing the above-identified correction(s) is hereby:

Note your decision on the appropriate box.

- ☒ **Approved** — **All** changes apply.
- ☐ **Approved in Part** — Specify below which changes **do not** apply.
- ☐ **Denied** — State the reasons for denial below.

Comments: The Request for Certificate of Correction is for the purpose of correcting clerical/typographical errors. The corrections do not add new matter.

/UYEN-CHAU LE/ — **SPE**

2874 — **Art Unit**

SPE RESPONSE FOR CERTIFICATE OF CORRECTION

Paper No.:20091209

DATE : December 9, 2009

TO SPE OF : ART UNIT 2625

SUBJECT : Request for Certificate of Correction on Patent No.: 7466445

A response is requested with respect to the accompanying request for a certificate of correction.

Please complete this form and return with file, within **7** days to:
Certificates of Correction Branch - PK 3-910
Palm location **7590** - Tel. No. 305-8201

With respect to the change(s) requested, correcting Office and/or Applicant's errors, should the patent read as shown in the certificate of correction? No new matter should be introduced, nor should the scope or meaning of the claims be changed.

Thank You For Your Assistance **Certificates of Correction Branch**

The request for issuing the above-identified correction(s) is hereby:
Note your decision on the appropriate box.

☒ **Approved** **All** changes apply.

☐ **Approved in Part** Specify below which changes **do not** apply.

☐ **Denied** State the reasons for denial below.

Comments:

SPE: Mark K. Zimmerman **Art Unit** 2625

IN THE UNITED STATES PATENT AND TRADEMARK OFFICE

FIRST NAMED INVENTOR	:	William C. Kress **Confirmation No.: 5438**
FOR	:	COLOR AND DENSITY CALIBRATION OF COLOR PRINTERS
APPLICATION NO.	:	10/619,387
FILING DATE	:	July 14, 2003
EXAMINER	:	Madeleine Anh Vinh Nguyen
ART UNIT	:	2625
CUSTOMER NO.	:	**23380**

REQUEST FOR CERTIFICATE OF CORRECTION

Attention: Decisions and Certificate of Correction Branch
Commissioner for Patents
P.O. Box 1450
Alexandria, VA 22313-1450

Dear Sirs:

Attached is form PTO/SB/44 requesting a Certificate of Correction for the above-referenced patent.

The fee of $100.00 for this request is submitted herewith. If any additional fees are due with this request, please charge to Deposit Account No. 50-0902 (66329/24815).

Respectfully submitted,

Date: 11/10/09

APPROVED: /MN/
11/23/2009

Susan L. Mizer
Registration No: 38,245
TUCKER ELLIS & WEST LLP
1150 Huntington Building
925 Euclid Avenue
Cleveland, Ohio 44115-1475
Customer No.: 23380
Tel: (216) 696-3466
Fax: (216) 592-5009

Enclosures: PTO/SB/44 (09-07) two copies

PTO/SB/44 (09-07)
Approved for use through 09/31/2010. OMB 0651-0033
U.S. Patent and Trademark Office; U.S. DEPARTMENT OF COMMERCE
Under the Paperwork Reduction Act of 1995, no persons are required to respond to a collection of information unless it displays a valid OMB control number.
(Also Form PTO-1050)

UNITED STATES PATENT AND TRADEMARK OFFICE
CERTIFICATE OF CORRECTION

PATENT NO. : 7,466,445

APPLICATION NO.: 10/619,387

ISSUE DATE : December 16, 2008

INVENTOR(S) : William C. Kress

It is certified that an error appears or errors appear in the above-identified patent and that said Letters Patent is hereby corrected as shown below:

In the Drawings:
Replace Fig. 1 with the following:

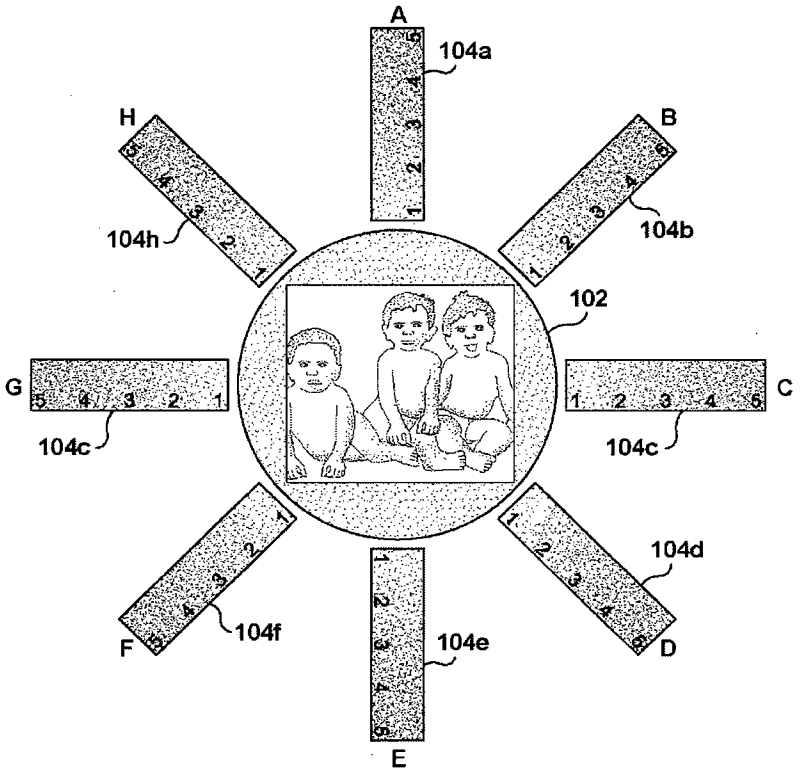

FIG. 1

MAILING ADDRESS OF SENDER (Please do not use customer number below):

This collection of information is required by 37 CFR 1.322, 1.323, and 1.324. The information is required to obtain or retain a benefit by the public which is to file (and by the USPTO to process) an application. Confidentiality is governed by 35 U.S.C. 122 and 37 CFR 1.14. This collection is estimated to take 1.0 hour to complete, including gathering, preparing, and submitting the completed application form to the USPTO. Time will vary depending upon the individual case. Any comments on the amount of time you require to complete this form and/or suggestions for reducing this burden, should be sent to the Chief Information Officer, U.S. Patent and Trademark Office, U.S. Department of Commerce, P.O. Box 1450, Alexandria, VA 22313-1450. DO NOT SEND FEES OR COMPLETED FORMS TO THIS ADDRESS. **SEND TO: Attention Certificate of Corrections Branch, Commissioner for Patents, P.O. Box 1450, Alexandria, VA 22313-1450.**

If you need assistance in completing the form, call 1-800-PTO-9199 and select option 2.

PTO/SB/44 (09-07)
Approved for use through 08/31/2010. OMB 0651-0033
U.S. Patent and Trademark Office; U.S. DEPARTMENT OF COMMERCE
Under the Paperwork Reduction Act of 1995, no persons are required to respond to a collection of information unless it displays a valid OMB control number.
(Also Form PTO-1050)

UNITED STATES PATENT AND TRADEMARK OFFICE
CERTIFICATE OF CORRECTION

PATENT NO. : 7,466,445

APPLICATION NO.: 10/619,387

ISSUE DATE : December 16, 2008

INVENTOR(S) : William C. Kress

It is certified that an error appears or errors appear in the above-identified patent and that said Letters Patent is hereby corrected as shown below:

In the Drawings:
Replace Fig. 2 with the following:

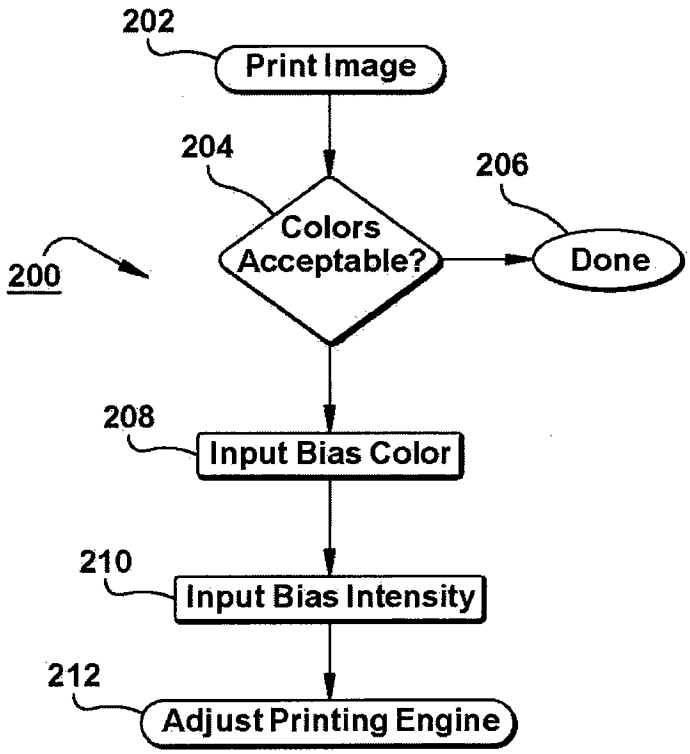

FIG. 2

MAILING ADDRESS OF SENDER (Please do not use customer number below):

This collection of information is required by 37 CFR 1.322, 1.323, and 1.324. The information is required to obtain or retain a benefit by the public which is to file (and by the USPTO to process) an application. Confidentiality is governed by 35 U.S.C. 122 and 37 CFR 1.14. This collection is estimated to take 1.0 hour to complete, including gathering, preparing, and submitting the completed application form to the USPTO. Time will vary depending upon the individual case. Any comments on the amount of time you require to complete this form and/or suggestions for reducing this burden, should be sent to the Chief Information Officer, U.S. Patent and Trademark Office, U.S. Department of Commerce, P.O. Box 1450, Alexandria, VA 22313-1450. DO NOT SEND FEES OR COMPLETED FORMS TO THIS ADDRESS. **SEND TO: Attention Certificate of Corrections Branch, Commissioner for Patents, P.O. Box 1450, Alexandria, VA 22313-1450.**

If you need assistance in completing the form, call 1-800-PTO-9199 and select option 2.

PTO/SB/44 (09-07)
Approved for use through 08/31/2010. OMB 0651-0033
U.S. Patent and Trademark Office; U.S. DEPARTMENT OF COMMERCE
Under the Paperwork Reduction Act of 1995, no persons are required to respond to a collection of information unless it displays a valid OMB control number.
(Also Form PTO-1050)

UNITED STATES PATENT AND TRADEMARK OFFICE
CERTIFICATE OF CORRECTION

PATENT NO. : 7,466,445

APPLICATION NO.: 10/619,387

ISSUE DATE : December 16, 2008

INVENTOR(S) : William C. Kress

It is certified that an error appears or errors appear in the above-identified patent and that said Letters Patent is hereby corrected as shown below:

In the Drawings:
Replace Fig. 3 with the following:

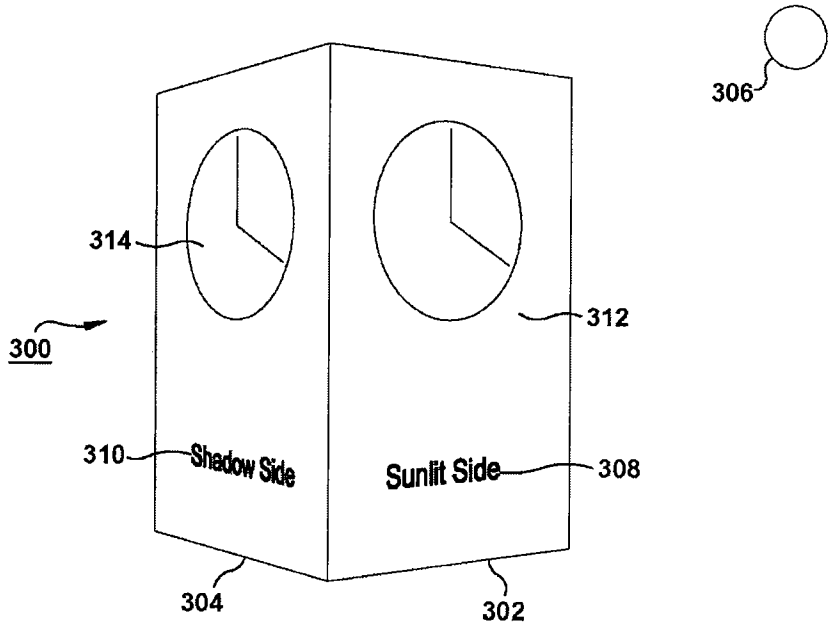

FIG. 3

MAILING ADDRESS OF SENDER (Please do not use customer number below):

This collection of information is required by 37 CFR 1.322, 1.323, and 1.324. The information is required to obtain or retain a benefit by the public which is to file (and by the USPTO to process) an application. Confidentiality is governed by 35 U.S.C. 122 and 37 CFR 1.14. This collection is estimated to take 1.0 hour to complete, including gathering, preparing, and submitting the completed application form to the USPTO. Time will vary depending upon the individual case. Any comments on the amount of time you require to complete this form and/or suggestions for reducing this burden, should be sent to the Chief Information Officer, U.S. Patent and Trademark Office, U.S. Department of Commerce, P.O. Box 1450, Alexandria, VA 22313-1450. DO NOT SEND FEES OR COMPLETED FORMS TO THIS ADDRESS. **SEND TO: Attention Certificate of Corrections Branch, Commissioner for Patents, P.O. Box 1450, Alexandria, VA 22313-1450.**

If you need assistance in completing the form, call 1-800-PTO-9199 and select option 2.

PTO/SB/44 (09-07)
Approved for use through 08/31/2010. OMB 0651-0033
U.S. Patent and Trademark Office; U.S. DEPARTMENT OF COMMERCE
Under the Paperwork Reduction Act of 1995, no persons are required to respond to a collection of information unless it displays a valid OMB control number.
(Also Form PTO-1050)

UNITED STATES PATENT AND TRADEMARK OFFICE
CERTIFICATE OF CORRECTION

PATENT NO. : 7,466,445

APPLICATION NO.: 10/619,387

ISSUE DATE : December 16, 2008

INVENTOR(S) : William C. Kress

It is certified that an error appears or errors appear in the above-identified patent and that said Letters Patent is hereby corrected as shown below:

In the Drawings:
Replace Fig. 4 with the following:

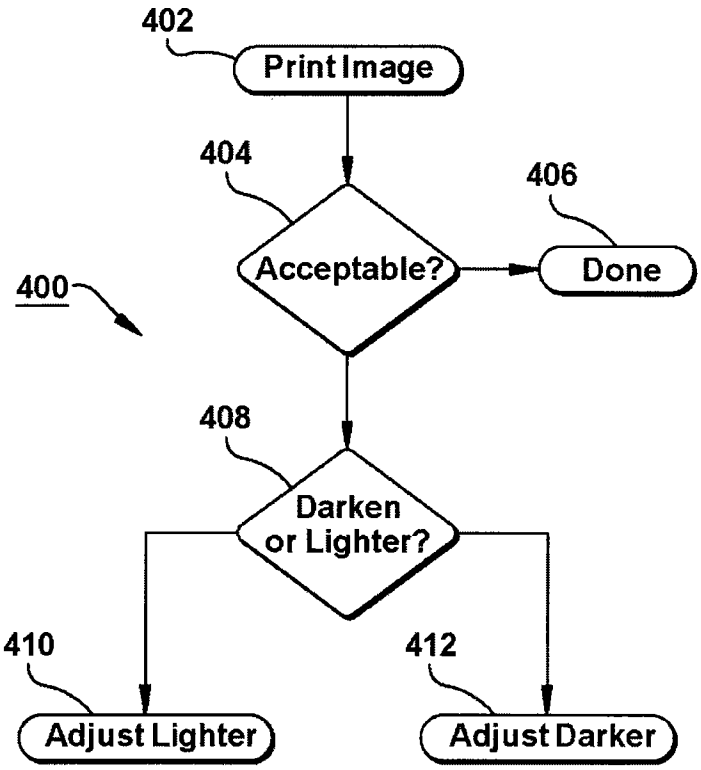

FIG. 4

MAILING ADDRESS OF SENDER (Please do not use customer number below):

This collection of information is required by 37 CFR 1.322, 1.323, and 1.324. The information is required to obtain or retain a benefit by the public which is to file (and by the USPTO to process) an application. Confidentiality is governed by 35 U.S.C. 122 and 37 CFR 1.14. This collection is estimated to take 1.0 hour to complete, including gathering, preparing, and submitting the completed application form to the USPTO. Time will vary depending upon the individual case. Any comments on the amount of time you require to complete this form and/or suggestions for reducing this burden, should be sent to the Chief Information Officer, U.S. Patent and Trademark Office, U.S. Department of Commerce, P.O. Box 1450, Alexandria, VA 22313-1450. DO NOT SEND FEES OR COMPLETED FORMS TO THIS ADDRESS. **SEND TO: Attention Certificate of Corrections Branch, Commissioner for Patents, P.O. Box 1450, Alexandria, VA 22313-1450.**

If you need assistance in completing the form, call 1-800-PTO-9199 and select option 2.

SPE RESPONSE FOR CERTIFICATE OF CORRECTION

Paper No.:20091123

DATE : December 17, 2009

TO SPE OF : ART UNIT 2625

SUBJECT : Request for Certificate of Correction on Patent No.: 10/619,387

A response is requested with respect to the accompanying request for a certificate of correction.

Please complete this form and return with file, within **7** days to:
Certificates of Correction Branch - PK 3-910
Palm location **7590** - Tel. No. 305-8201

With respect to the change(s) requested, correcting Office and/or Applicant's errors, should the patent read as shown in the certificate of correction? No new matter should be introduced, nor should the scope or meaning of the claims be changed.

Thank You For Your Assistance **Certificates of Correction Branch**

The request for issuing the above-identified correction(s) is hereby:
Note your decision on the appropriate box.

☒ **Approved** **All** changes apply.

☐ **Approved in Part** Specify below which changes **do not** apply.

☐ **Denied** State the reasons for denial below.

Comments:

The replacement of Figs.1-4 is approved.

SPE: /Edward L. Coles/ **Art Unit** 2625

UNITED STATES PATENT AND TRADEMARK OFFICE

Commissioner for Patents
United States Patent and Trademark Office
P.O. Box 1450
Alexandria, VA 22313-1450
www.uspto.gov

TUCKER ELLIS & WEST LLP
1150 HUNTINGTON BUILDING
925 EUCLID AVENUE
CLEVELAND, OH 44115-1414

MAILED

APR 24 2009

OFFICE OF PETITIONS

In re Application of	:	
William C. Kress	:	
Application No. 10/619,388	:	ON PETITION
Filed: July 14, 2003	:	
Attorney Docket No. 66329/24817	:	

This is a decision on the petition under the unintentional provisions of 37 CFR 1.137(b), filed March 31, 2009, to revive the above-identified application.

The petition is **GRANTED**.

The application became abandoned for failure to reply in a timely manner to the non-final Office action mailed, July 18, 2008, which set a shortened statutory period for reply of three (3) months. No extensions of time under the provisions of 37 CFR 1.136(a) were obtained. Accordingly, the application became abandoned on October 19, 2008. A Notice of Abandonment was mailed February 25, 2009.

The petition satisfies the requirements of 37 CFR 1.137(b) in that petitioner has supplied (1) the reply in the form of an amendment, (2) the petition fee of $1,620, and (3) an adequate statement of unintentional delay.

Telephone inquiries concerning this decision should be directed to Alicia Kelley at (571) 272-6059.

This application is being referred to Technology Center 2625 for further examination on the merits.

/SDB/

Sherry D. Brinkley
Petitions Examiner
Office of Petitions

UNITED STATES PATENT AND TRADEMARK OFFICE

Commissioner for Patents
United States Patent and Trademark Office
P.O. Box 1450
Alexandria, VA 22313-1450
www.uspto.gov

LAHIVE & COCKFIELD, LLP
28 STATE STREET
BOSTON MA 02109

COPY MAILED
DEC 14 2006
OFFICE OF PETITIONS

In re Application of	:	
Yoshinobu Hasuka, et al.	:	
Application No. 10/619,408	:	DECISION GRANTING PETITION
Filed: July 15, 2003	:	UNDER 37 CFR 1.313(c)(2)
Attorney Docket No. SIW-063	:	

This is a decision on the petition under 37 CFR 1.313(c)(2), filed December 12, 2006, to withdraw the above-identified application from issue after payment of the issue fee.

The petition is **GRANTED**.

The above-identified application is withdrawn from issue for consideration of a submission under 37 CFR 1.114 (request for continued examination). *See* 37 CFR 1.313(c)(2).

Petitioner is advised that the issue fee paid on May 22, 2006 cannot be refunded. If, however, this application is again allowed, petitioner may request that it be applied towards the issue fee required by the new Notice of Allowance.[1]

Telephone inquiries regarding this decision should be directed to April Wise at (571) 272-1642.

This application is being referred to Technology Center AU 3618 for processing of the request for continued examination under 37 CFR 1.114 and for consideration of the concurrently filed information disclosure statement.

Frances Hicks
Frances M. Hicks
Petitions Examiner
Office of Petitions

[1] *The request to apply the issue fee to the new Notice may be satisfied by completing and returning the new Part B – Fee(s) Transmittal Form (along with any balance due at the time of submission). Petitioner is advised that the Issue Fee Transmittal Form must be completed and timely submitted to avoid abandonment of the application.*

UNITED STATES PATENT AND TRADEMARK OFFICE

Commissioner for Patents
United States Patent and Trademark Office
P.O. Box 1450
Alexandria, VA 22313-1450
www.uspto.gov

MRS. SANDRA M. WORTH
WATER MEADOW NURSERY CHERITON
NR. ALRESFORD, HAMPSHIRE S024 OQB
UNITED KINGDOM

COPY MAILED
DEC 0 8 2006
OFFICE OF PETITIONS

In re Application of DeWitt :
Application No. 10/619,411 : Decision on Petition
Filing Date: July 16, 2003 :
For: Papaver Supperpoppy :
Hybrid "Heartbeat" :

This is a decision on the petition under 37 CFR 1.137(a), filed July 21, 2006, to revive the above-identified application.

The petition is **DISMISSED**.

A grantable petition under 37 CFR 1.137(a) must be accompanied by:

(1) the required reply,
(2) the petition fee,
(3) a showing to the satisfaction of the Commissioner that the entire delay in filing the required reply from the due date for the reply until the filing of a grantable petition pursuant to this paragraph was unavoidable, and
(4) a terminal disclaimer and fee *if* the application was filed on or before June 8, 1995 or *if* the application is a design application.

The instant petition lacks item (3) above.

As to item (3), the showing of record is not sufficient to establish to the satisfaction of the Commissioner that the delay was unavoidable within the meaning of 37 CFR 1.137(a).

35 USC 133 states, "Upon failure of the applicant to prosecute the application within six months after any action therein, of which notice has been given or mailed to the applicant, or within such shorter time, not less than thirty days, as fixed by the Commissioner in such action, the application shall be regarded as abandoned by the parties thereto, unless it be shown to the satisfaction of the Commissioner that such delay was unavoidable." (emphasis added)

"[T]he question of whether an applicant's delay in prosecuting an application was unavoidable must be decided on a case-by-case basis, taking all of the facts and circumstances into account."[1] The general question asked by the Office is: "Did petitioner act as a reasonable and prudent

[1] Smith v. Mossinghoff, 671 F.2d 533, 538, 213 U.S.P.Q. (BNA) 977 (1982).

person in relation to his most important business?"[2] A lack of knowledge of, or failure to understand, a PTO rule, the content of the MPEP, or an Official Gazette notice will not constitute unavoidable delay.[3]

Discussion:

A non-final Office action was mailed April 21, 2004.

The non-final Office action set a shortened statutory period for reply of three (3) months. The non-final Office action stated, "Extensions of time may be available under the provisions of 37 CFR 1.136(a)."

Absent payment for an extension of time, a reply was due by July 21, 2004.

The non-final Office action instructed applicant to send correspondence to:

Commissioner for Patents
P.O. Box 1450
Alexandria, VA 22313-1450

On an unknown date, petitioner mailed a reply using a mailing service that does not deliver correspondence to post office boxes. An August 17, 2004 letter from Sandy Worth states,

> The corrected documents have been sitting in Virginia DHL office since August 4th, as they have been unable to deliver to a P.O. Box Number.

The amendment was received August 24, 2006. The amendment was not accompanied by a request, and payment, for an extension of time. Therefore, the reply was untimely. As stated previously, absent payment for an extension of time, a reply was due by July 21, 2004.

Since an extension of time was not obtained, the application became abandoned as of midnight on July 21, 2004.

A non-final Office action was mailed April 21, 2004.

The non-final Office action set a shortened statutory period for reply of three (3) months. The non-final Office action stated, "Extensions of time may be available under the provisions of 37 CFR 1.136(a)."

---

[2] See In re Mattullath, 38 App. D.C. 497 (D.C. Cir. 1912).

[3] See Smith v. Mossinghoff, 671 F.2d 533, 538, 213 U.S.P.Q. (BNA) 977 (Fed. Cir. 1982) (citing Potter v. Dann, 201 U.S.P.Q. (BNA) 574 (D. D.C. 1978) for the proposition that counsel's nonawareness of PTO rules does not constitute "unavoidable" delay); Vincent v. Mossinghoff, 1985 U.S. Dist. LEXIS 23119, 13, 230 U.S.P.Q. (BNA) 621 (D. D.C. 1985) (Plaintiffs, through their counsel's actions, **or their own**, must be held responsible for having noted the MPEP section and Official Gazette notices expressly stating that the certified mailing procedures outlined in 37 CFR 1.8(a) do not apply to continuation applications.) (Emphasis added).

Absent payment for an extension of time, a reply was due by July 21, 2004.

The non-final Office action instructed applicant to send correspondence to:

> Commissioner for Patents
> P.O. Box 1450
> Alexandria, VA 22313-1450

On an unknown date, petitioner mailed a reply using a mailing service that does not deliver correspondence to post office boxes. An August 17, 2004 letter from Sandy Worth states,

> The corrected documents have been sitting in Virginia DHL office since August 4th, as they have been unable to deliver to a P.O. Box Number.

The amendment was received August 24, 2006. The amendment was not accompanied by a request, and payment, for an extension of time. Therefore, the reply was untimely. As stated previously, absent payment for an extension of time, a reply was due by July 21, 2004.

Even if the reply had been timely filed, the reply would have been improper. The reply was submitted and signed by the assignee but was not accompanied by the required showing in compliance with 37 CFR 3.73(b).

Since an extension of time was not obtained, the application became abandoned as of midnight on July 21, 2004.

The Office mailed a letter on November 16, 2004, informing petitioner the amendment filed August 24, 2006, could not be accepted because the amendment was not properly signed. The Office action set a period for reply of one (1) month. The Office action stated extensions of time under the provisions of 37 CFR 1.136(a) were available.

On December 23, 2004, petitioner submitted a letter including a showing under 37 CFR 3.73(b). However, since the application became abandoned at midnight on July 21, 2004, the showing under 37 CFR 3.73(b) was untimely.

A Notice of Abandonment was mailed June 14, 2006. The Notice stated the application became abandoned due to applicant's failure to timely file a reply to the November 16, 2004 Office action.

The Notice of Abandonment was incorrect in so far as it failed to state the application became abandoned for petitioner's failure to timely reply to the Office action mailed April 21, 2004.

In essence, the application became abandoned as a result of petitioner's failure to know one can obtain extensions of time to reply to a non-final Office action. If petitioner has submitted the fee for a two-month extension of time, the reply filed August 24, 2004, would have been timely.

Petitioner has failed to prove the failure to have knowledge of the ability to obtain extensions of time demonstrates the abandonment was unavoidable. As stated, previously in this decision, a lack of knowledge of, or failure to understand, a PTO rule, the content of the MPEP, or an Official Gazette notice will not constitute unavoidable delay.[4]

For the reasons above, the petition must be dismissed.

Petitioner may wish to consider filing a petition to revive based on unintentional abandonment under 37 CFR 1.137(b). A grantable petition pursuant to 37 CFR 1.137(b) must be accompanied by the required reply (already submitted), the required petition fee ($750 for a small entity), and a statement that the **entire** delay in filing the required reply from the due date for the reply until the filing of a grantable petition pursuant to 37 CFR 1.137(b) was unintentional. A copy of a blank petition form is enclosed for petitioner's convenience.

Any request for reconsideration must be submitted within TWO (2) MONTHS from the mail date of this decision. Extensions of time under 37 CFR 1.136(a) are permitted.

Further correspondence with respect to this matter should be addressed as follows:

By mail: Mail Stop Petition
Commissioner for Patents
P.O. Box 1450
Alexandria, VA 22313-1450

By facsimile: (571) 273-8300
Attn: Office of Petitions

By hand:[5] U.S. Patent and Trademark Office
Customer Service Window
Randolph Building
401 Dulany Street
Alexandria, VA 22314

Telephone inquiries regarding this communication should be directed to Petitions Attorney Steven Brantley at (571) 272-3203.

Charles Steven Brantley
Senior Petitions Attorney
Office of Petitions

Attached: Form PTO/SB/64

---

[4] See Id.

[5] DHL, FedEX, UPS, and many other delivery services will hand deliver mail to this address.

PTO/SB/64 (09-06)
Approved for use through 03/31/2007. OMB 0651-0031
U.S. Patent and Trademark Office; U.S. DEPARTMENT OF COMMERCE
Under the Paperwork Reduction Act of 1995, no persons are required to respond to a collection of information unless it displays a valid OMB control number.

PETITION FOR REVIVAL OF AN APPLICATION FOR PATENT ABANDONED UNINTENTIONALLY UNDER 37 CFR 1.137(b)

Docket Number (Optional)

First named inventor:

Application No.: Art Unit:

Filed: Examiner:

Title:

Attention: Office of Petitions
Mail Stop Petition
Commissioner for Patents
P.O. Box 1450
Alexandria, VA 22313-1450
FAX (571) 273-8300

NOTE: If information or assistance is needed in completing this form, please contact Petitions Information at (571) 272-3282.

The above-identified application became abandoned for failure to file a timely and proper reply to a notice or action by the United States Patent and Trademark Office. The date of abandonment is the day after the expiration date of the period set for reply in the office notice or action plus an extensions of time actually obtained.

APPLICANT HEREBY PETITIONS FOR REVIVAL OF THIS APPLICATION

NOTE: A grantable petition requires the following items:
(1) Petition fee;
(2) Reply and/or issue fee;
(3) Terminal disclaimer with disclaimer fee - required for all utility and plant applications filed before June 8, 1995; and for all design applications; and
(4) Statement that the entire delay was unintentional.

1. Petition fee

☐ Small entity-fee $ _____ (37 CFR 1.17(m)). Applicant claims small entity status. See 37 CFR 1.27.

☐ Other than small entity – fee $ _____ (37 CFR 1.17(m))

2. Reply and/or fee

A. The reply and/or fee to the above-noted Office action in the form of _____(identify type of reply):

☐ has been filed previously on _____.
☐ is enclosed herewith.

B. The issue fee and publication fee (if applicable) of $ _____.

☐ has been paid previously on _____.
☐ is enclosed herewith.

This collection of information is required by 37 CFR 1.137(b). The information is required to obtain or retain a benefit by the public which is to file (and by the USPTO to process) an application. Confidentiality is governed by 35 U.S.C. 122 and 37 CFR 1.11 and 1.14. This collection is estimated to take 1.0 hour to complete, including gathering, preparing, and submitting the completed application form to the USPTO. Time will vary depending upon the individual case. Any comments on the amount of time you require to complete this form and/or suggestions for reducing this burden, should be sent to the Chief Information Officer, U.S. Patent and Trademark Office, U.S. Department of Commerce, P.O. Box 1450, Alexandria, VA 22313-1450. DO NOT SEND FEES OR COMPLETED FORMS TO THIS ADDRESS. **SEND TO: Mail Stop Petition, Commissioner for Patents, P.O. Box 1450, Alexandria, VA 22313-1450.**

If you need assistance in completing the form, call 1-800-PTO-9199 and select option 2.

Under the Paperwork Reduction Act of 1995, no persons are required to respond to a collection of information unless it displays a valid OMB control number.

3. Terminal disclaimer with disclaimer fee

☐ Since this utility/plant application was filed on or after June 8, 1995, no terminal disclaimer is required.

☐ A terminal disclaimer (and disclaimer fee (37 CFR 1.20(d)) of $ _____ for a small entity or $ _____ for other than a small entity) disclaiming the required period of time is enclosed herewith (see PTO/SB/63).

4. STATEMENT: The entire delay in filing the required reply from the due date for the required reply until the filing of a grantable petition under 37 CFR 1.137(b) was unintentional. [NOTE: The United States Patent and Trademark Office may require additional information if there is a question as to whether either the abandonment or the delay in filing a petition under 37 CFR 1.137(b) was unintentional (MPEP 711.03(c), subsections (III)(C) and (D)).]

WARNING:

Petitioner/applicant is cautioned to avoid submitting personal information in documents filed in a patent application that may contribute to identity theft. Personal information such as social security numbers, bank account numbers, or credit card numbers (other than a check or credit card authorization form PTO-2038 submitted for payment purposes) is never required by the USPTO to support a petition or an application. If this type of personal information is included in documents submitted to the USPTO, petitioners/applicants should consider redacting such personal information from the documents before submitting them to the USPTO. Petitioner/applicant is advised that the record of a patent application is available to the public after publication of the application (unless a non-publication request in compliance with 37 CFR 1.213(a) is made in the application) or issuance of a patent. Furthermore, the record from an abandoned application may also be available to the public if the application is referenced in a published application or an issued patent (see 37 CFR 1.14). Checks and credit card authorization forms PTO-2038 submitted for payment purposes are not retained in the application file and therefore are not publicly available.

Signature	Date
Typed or printed name	Registration Number, if applicable
Address	Telephone Number
Address	

Enclosures:
- ☐ Fee Payment
- ☐ Reply
- ☐ Terminal Disclaimer Form
- ☐ Additional sheets containing statements establishing unintentional delay
- ☐ Other: _____

CERTIFICATE OF MAILING OR TRANSMISSION [37 CFR 1.8(a)]

I hereby certify that this correspondence is being:

☐ Deposited with the United States Postal Service on the date shown below with sufficient postage as first class mail in an envelope addressed to: Mail Stop Petition, Commissioner for Patents, P. O. Box 1450, Alexandria, VA 22313-1450.

☐ Transmitted by facsimile on the date shown below to the United States Patent and Trademark Office at (571) 273-8300.

Date	Signature
	Typed or printed name of person signing certificate

Privacy Act Statement

The **Privacy Act of 1974 (P.L. 93-579)** requires that you be given certain information in connection with your submission of the attached form related to a patent application or patent. Accordingly, pursuant to the requirements of the Act, please be advised that: (1) the general authority for the collection of this information is 35 U.S.C. 2(b)(2); (2) furnishing of the information solicited is voluntary; and (3) the principal purpose for which the information is used by the U.S. Patent and Trademark Office is to process and/or examine your submission related to a patent application or patent. If you do not furnish the requested information, the U.S. Patent and Trademark Office may not be able to process and/or examine your submission, which may result in termination of proceedings or abandonment of the application or expiration of the patent.

The information provided by you in this form will be subject to the following routine uses:

1. The information on this form will be treated confidentially to the extent allowed under the Freedom of Information Act (5 U.S.C. 552) and the Privacy Act (5 U.S.C 552a). Records from this system of records may be disclosed to the Department of Justice to determine whether disclosure of these records is required by the Freedom of Information Act.
2. A record from this system of records may be disclosed, as a routine use, in the course of presenting evidence to a court, magistrate, or administrative tribunal, including disclosures to opposing counsel in the course of settlement negotiations.
3. A record in this system of records may be disclosed, as a routine use, to a Member of Congress submitting a request involving an individual, to whom the record pertains, when the individual has requested assistance from the Member with respect to the subject matter of the record.
4. A record in this system of records may be disclosed, as a routine use, to a contractor of the Agency having need for the information in order to perform a contract. Recipients of information shall be required to comply with the requirements of the Privacy Act of 1974, as amended, pursuant to 5 U.S.C. 552a(m).
5. A record related to an International Application filed under the Patent Cooperation Treaty in this system of records may be disclosed, as a routine use, to the International Bureau of the World Intellectual Property Organization, pursuant to the Patent Cooperation Treaty.
6. A record in this system of records may be disclosed, as a routine use, to another federal agency for purposes of National Security review (35 U.S.C. 181) and for review pursuant to the Atomic Energy Act (42 U.S.C. 218(c)).
7. A record from this system of records may be disclosed, as a routine use, to the Administrator, General Services, or his/her designee, during an inspection of records conducted by GSA as part of that agency's responsibility to recommend improvements in records management practices and programs, under authority of 44 U.S.C. 2904 and 2906. Such disclosure shall be made in accordance with the GSA regulations governing inspection of records for this purpose, and any other relevant (*i.e.*, GSA or Commerce) directive. Such disclosure shall not be used to make determinations about individuals.
8. A record from this system of records may be disclosed, as a routine use, to the public after either publication of the application pursuant to 35 U.S.C. 122(b) or issuance of a patent pursuant to 35 U.S.C. 151. Further, a record may be disclosed, subject to the limitations of 37 CFR 1.14, as a routine use, to the public if the record was filed in an application which became abandoned or in which the proceedings were terminated and which application is referenced by either a published application, an application open to public inspection or an issued patent.
9. A record from this system of records may be disclosed, as a routine use, to a Federal, State, or local law enforcement agency, if the USPTO becomes aware of a violation or potential violation of law or regulation.

UNITED STATES PATENT AND TRADEMARK OFFICE

Commissioner for Patents
United States Patent and Trademark Office
P.O. Box 1450
Alexandria, VA 22313-1450
www.uspto.gov

MRS. SANDRA M. WORTH
WATER MEADOW NURSERY CHERITON
NR. ALRESFORD, HAMPSHIRE S024 OQB
UNITED KINGDOM

COPY MAILED

MAR 07 2007

OFFICE OF PETITIONS

In re Application of DeWitt :
Application No. 10/619,411 : Decision on Petition
Filing Date: July 16, 2003 :
For: Papaver Supperpoppy :
Hybrid "Heartbeat" :

This is a decision on the petition under 37 CFR 1.137(b), filed February 5, 2007, to revive the above-identified application.

The petition is **granted**.

A non-final Office action was mailed April 21, 2004. The non-final Office action set a shortened statutory period for reply of three (3) months. The non-final Office action stated, "Extensions of time may be available under the provisions of 37 CFR 1.136(a)." An amendment was received August 24, 2006. The amendment was not accompanied by a request, and payment, for an extension of time. Therefore, the reply was untimely.

Since an extension of time was not obtained, the application became abandoned as of midnight on July 21, 2004.

A Notice of Abandonment was mailed June 14, 2006.

The instant petition requests revival of the application.

Petitioner has met the requirements to revive the above-identified application pursuant to 37 CFR 1.137(b). Therefore, the petition is granted and the application is revived.

Technology Center Art Unit 1661 will be informed of the instant decision and the application will be further examined in due course.

Telephone inquiries regarding this communication should be directed to Petitions Attorney Steven Brantley at (571) 272-3203.

Charles Steven Brantley
Senior Petitions Attorney
Office of Petitions

SPE RESPONSE FOR CERTIFICATE OF CORRECTION

DATE : 9/22/08

Paper No.: —

TO SPE OF : ART UNIT 2831

SUBJECT : Request for Certificate of Correction for Appl. No.: 10/619441 Patent No.: 6969805B2

Please respond to this request for a certificate of correction within 7 days.

FOR IFW FILES: — Please review entry dated 8/29/08 —

Please review the requested changes/corrections as shown in the **COCIN** document(s) in the IFW application image. No new matter should be introduced, nor should the scope or meaning of the claims be changed.

Please complete the response (see below) and forward the completed response to scanning using document code **COCX**.

FOR PAPER FILES:

Please review the requested changes/corrections as shown in the attached certificate of correction. Please complete this form (see below) and forward it with the file to:

Certificates of Correction Branch (CofC)
South Tower - 9A22
Palm Location 7580

Virginia Tolbert
Certificates of Correction Branch
703-308-9390 ext. 113

Thank You For Your Assistance

The request for issuing the above-identified correction(s) is hereby:
Note your decision on the appropriate box.

- ☑ **Approved** — **All** changes apply.
- ☐ **Approved in Part** — Specify below which changes **do not** apply.
- ☐ **Denied** — State the reasons for denial below.

Comments: 10/16/08

DIEGO GUTIERREZ
SUPERVISORY PATENT EXAMINER

SPE

2831
Art Unit

UNITED STATES PATENT AND TRADEMARK OFFICE

Commissioner for Patents
United States Patent and Trademark Office
P.O. Box 1450
Alexandria, VA 22313-1450
www.uspto.gov

WINSTON & STRAWN LLP
PATENT DEPARTMENT
1700 K STREET, N.W.
WASHINGTON DC 20006

COPY MAILED

OCT 26 2006

OFFICE OF PETITIONS

ON PETITION

In re Patent No. 7,048,867 :
Issue Date: May 23, 2006 :
Application No. 10/619,446 :
Filed: July 16, 2003 :
Attorney Docket No. 4717-5800 :

This is a decision on the petition filed June 5, 2006, which is being treated as a petition under 37 CFR 3.81(b)[1] to correct the assignee on the front page of the above-identified patent by way of a Certificate of Correction.

The petition is granted.

Telephone inquiries concerning this matter may be directed to the undersigned at (571) 272-3208. Any questions concerning the issuance of the Certificate of Correction should be directed to the Certificates of Correction Branch at (703) 305-8309.

The file is being forwarded to the Certificates of Correction Branch for issuance of the requested Certificate of Correction.

Karen Creasy
Petitions Examiner
Office of Petitions

[1]See Official Gazette of June 22, 2004

UNITED STATES PATENT AND TRADEMARK OFFICE

Commissioner for Patents
United States Patent and Trademark Office
P.O. Box 1450
Alexandria, VA 22313-1450
www.uspto.gov

SUGHRUE MION, PLLC
2100 PENNSYLVANIA AVENUE, N.W.
SUITE 800
WASHINGTON, DC 20037

COPY MAILED

MAR 19 2007

OFFICE OF PETITIONS

In re Application of	:	
Dygert et al.	:	
Application No. 10/619513	:	
Filing or 371(c) Date: 07/16/2003	:	ON PETITION
Patent No. 6994233	:	
Issue Date: 02/07/2006	:	
For: VENTED PLASTIC:BOTTLE	:	

This is a notice regarding request for acceptance of a fee deficiency submission under 37 CFR 1.28. On September 1, 1998, the Court of Appeals for the Federal Circuit held that 37 CFR 1.28(c) is the sole provision governing the time for correction of the erroneous payment of the issue fee as a small entity. **See DH Technology v. Synergystex International, Inc. 154 F.3d 1333, 47 USPQ2d 1865 (Fed. Cir. Sept. 1, 1998).**

The Office no longer investigates or rejects original or reissue applications under 37 CFR 1.56. **1098 Off. Gaz. Pat. Office 502 (January 3, 1989)**. Therefore, nothing in this Notice is intended to imply that an investigation was done.

Your fee deficiency submission under 37 CFR 1.28 is hereby **ACCEPTED**.

Telephone inquiries concerning this matter should be directed to the undersigned at (571) 272-3232.

Derek L. Woods
Attorney
Office of Petitions

UNITED STATES DEPARTMENT OF COMMERCE
Patent and Trademark Office
ASSISTANT SECRETARY OF COMMERCE AND
COMMISSIONER OF PATENTS AND TRADEMARKS
Washington, D.C. 20231

Date: 10-12-07

Patent No.: Re39,595 E
Inventor: Li H. Liu
Issued: May 1, 2007
For: VACUUM CLEANSER TANK ASSEMBLY

Re: Request for Certificate of Correction

Consideration has been given your request for the issuance of a certificate of correction for the above-identified patent under the provisions of Rules 1.322 and 1.323.

Respecting the alleged error of the inventor's names and addresses, the inventor's names and addresses are printed in accordance with the Declaration submitted at the time of filing the application. Therefore, no correction is in order here under Rules 1.322 or 1.323.

In view of the foregoing, your request in this matter is hereby denied.

A petition under C.F.R. 1.82 is required to correct the alleged error in an inventor's names and addresses, since the inventor's names and addresses is printed in accordance with the Declaration. Since the was the result of applicant's failure to comply with requirements that the complete and correct names and addresses be indicated, no correction is in order here under the provisions of Rule 1.322 or 1.323, unless a petition is granted.

Any petition under 37 CFR 1.182 should be directed to the attention of the Assistant Commissioner for Patents, using the following mailing address or Fax number.

Further correspondence concerning this matter should be filed and directed to Decisions and Certificates of Correction Branch. Any response must be filed within a two-month period.

Eva James
For Cecelia Newman
Decisions & Certificates
of Correction Branch
(703) 308-9390 Ext. 124 or Ext. 102

Richard M. Labarge
Marshall, Gerstein & Borun
233 S. Wacker Drive, Suite 6300
Sears Tower
Chicago, Illinois 60606-6357

ej

UNITED STATES PATENT AND TRADEMARK OFFICE

Commissioner for Patents
United States Patent and Trademark Office
P.O. Box 1450
Alexandria, VA 22313-1450
www.uspto.gov

KATHY MANKE
AVAGO TECHNOLOGIES LIMITED
4380 ZIEGLER ROAD
FORT COLLINS, CO 94111

COPY MAILED

JAN 29 2008

OFFICE OF PETITIONS

In re Application of	:	
DENG, et al.	:	
Application No. 10/619,521	:	DECISION GRANTING PETITION
Filed: July 14, 2003	:	UNDER 37 CFR 1.313(c)(2)
Attorney Docket No. **10003809-7**	:	

This is a decision on the petition under 37 CFR 1.313(c)(2), filed January 25, 2008, to withdraw the above-identified application from issue after payment of the issue fee.

The petition is **GRANTED.**

The above-identified application is withdrawn from issue for consideration of a submission under 37 CFR 1.114 (request for continued examination). *See* 37 CFR 1.313(c)(2).

Petitioner is advised that the issue fee paid on December 20, 2007 cannot be refunded. If, however, this application is again allowed, petitioner may request that it be applied towards the issue fee required by the new Notice of Allowance.[1]

Telephone inquiries should be directed to Monica A. Graves at (571) 272-7253.

This application is being referred to Technology Center AU 2828 for processing of the request for continued examination under 37 CFR 1.114 and for consideration of the concurrently filed information disclosure statement.

Sherry D. Brinkley
Petitions Examiner
Office of Petitions

[1] *The request to apply the issue fee to the new Notice may be satisfied by completing and returning the new Part B – Fee(s) Transmittal Form (along with any balance due at the time of submission). Petitioner is advised that the Issue Fee Transmittal Form must be completed and timely submitted to avoid abandonment of the application.*

UNITED STATES PATENT AND TRADEMARK OFFICE

Commissioner for Patents
United States Patent and Trademark Office
P.O. Box 1450
Alexandria, VA 22313-1450
www.uspto.gov

COPY MAILED

DEC 0 5 2007

OFFICE OF PETITIONS

DR JOSEPH SMITH
1921 SO CLUB DRIVE
WELLINGTON FL 33414

In re Application of Joseph Smith Application No. 10/619,534 Filed: July 16, 2003 Title: Anatomically Configured Device for Orthopedic Support of the Body	: : : : :	ON PETITION

This is a decision on the petition to revive under 37 CFR 1.137(a), filed November 15, 2007.

The petition under 37 CFR 1.137(a) is **DISMISSED**.

Any request for reconsideration of this decision must be submitted within **TWO (2) MONTHS** from the mail date of this decision. The reconsideration request should include a cover letter entitled "Renewed Petition under 37 CFR 1.137(a)". Extensions of time under 37 CFR 1.136(a) are permitted. No fee is required for a renewed petition.

The above-identified application became abandoned for failure to file a reply to the non-final Office action mailed March 20, 2007. This Office action set a shortened statutory period for reply of three (3) months. No reply having been received, the application became abandoned on June 21, 2007. A Notice of Abandonment was mailed on September 28, 2007.

A grantable petition under 37 CFR 1.137(a) must be accompanied by: (1) the reply required to the outstanding Office action or notice, unless previously filed; (2) the petition fee set forth in 37 CFR 1.17(l); and (3) a showing to the satisfaction of the Commissioner that the entire delay in filing the required reply from the due date for the reply until the filing of a grantable petition pursuant to this paragraph was unavoidable. The instant petition lacks item (2).

The petition fee required for a petition to revive is required for the filing, not merely the grant, of the petition.[1] Accordingly, before the petition can even be considered on the merits, applicant must submit the petition fee, currently $255 for a small entity.

Where applicant contends that the application is not in fact abandoned (e.g., there is disagreement as to the sufficiency of the reply, or as to controlling dates), then applicant should file a petition under 37 CFR 1.181 to withdraw the holding of abandonment. There is no fee for such a petition. Where there is no dispute as to whether an application is abandoned (e.g., applicant's contentions merely involve the cause of the abandonment), then applicant should file a petition to revive under 37 CFR 1.137(a) (unavoidable delay - $255 petition fee) or 37 CFR 1.137(b) (unintentional delay - $770 petition fee).

Further correspondence with respect to this matter should be addressed as follows:

By mail: Mail Stop Petitions
Commissioner for Patents
P.O. Box 1450
Alexandria VA 22313-1450

By FAX: (571)273-8300
Attn: Office of Petitions

Telephone inquiries related to this decision should be directed to the undersigned at (571)272-3207.

Cliff Congo
Petitions Attorney
Office of Petitions

---

[1] See MPEP 711.03(c)(II)(B).

UNITED STATES PATENT AND TRADEMARK OFFICE

Commissioner for Patents
United States Patent and Trademark Office
P.O. Box 1450
Alexandria, VA 22313-1450
www.uspto.gov

YOUNG & THOMPSON
209 MADISON STREET
SUITE 500
ALEXANDRIA VA 22314

MAILED

MAR 25 2009

OFFICE OF PETITIONS

In re Application of
Lars Olson et al
Application No. 10/619,545
Filed: July 16, 2003
Attorney Docket No. 1522-1001-1

ON PETITION

This is a decision on the petition under the unintentional provisions of 37 CFR 1.137(b), filed February 13, 2009, to revive the above-identified application.

The petition is **GRANTED**.

The application became abandoned for failure to reply in a timely manner to the final rejection mailed November 16, 2006.

The above-identified application has been abandoned for an extended period of time. The Patent and Trademark Office is relying on petitioner's duty of candor and good faith and accepting the statement that the entire delay in filing the required reply from the due date for the reply until the filing of a grantable petition pursuant to 37 CFR 1.137(b) was unintentional. See Changes to Patent Practice and Procedure, 62 Fed. Reg. at 53160 and 53178; 1203 Off. Gaz. Pat. Office at 88 and 103 (responses to comments 64 and 109) (applicant obligated under 37 CFR 10.18 to inquire into the underlying facts and circumstances when providing the statement required by 37 CFR 1.137(b) to the Patent and Trademark Office).

The petition satisfies the requirements of 37 CFR 1.137(b) in that petitioner has supplied (1) the reply in the form of continuing Application No. 11/798,683, filed May 16, 2007; (2) the petition fee of $1,620.00; and (3) a proper statement of unintentional delay.

This application is being revived solely for purposes of continuity. As continuity has been established by this decision, the application is again abandoned in favor of continuing application No. 11/798,683.

Telephone inquiries concerning this decision should be directed to the undersigned at (571) 272-3208.

Karen Creasy

Karen Creasy
Petitions Examiner
Office of Petitions

UNITED STATES PATENT AND TRADEMARK OFFICE

Commissioner for Patents
United States Patent and Trademark Office
P.O. Box 1450
Alexandria, VA 22313-1450
www.uspto.gov

COPY MAILED

JUL 22 2008

VOLENTINE & WHITT PLLC
ONE FREEDOM SQUARE
11951 FREEDOM DRIVE SUITE 1260
RESTON VA 20190

In re Application of	:	
Kim, et al.	:	
Application No. 10/619,584	:	ON PETITION
Filed: July 16, 2003	:	
Attorney Docket No. SEC.310D3	:	

This is a decision on the petition under 37 CFR 1.137(b), filed June 1, 2007, to revive the above-identified application.

The petition under 37 CFR 1.137(b) is **GRANTED**.

The above-identified application became abandoned for failure to timely file a response to the non-final Office action mailed July 26, 2005. This Office action set an extendable period for reply of three months. No extensions of time were obtained. Accordingly, no reply having been received, the application became abandoned on October 27, 2005. A Notice of Abandonment was mailed on June 1, 2006.

With the instant petition, applicants paid the petition fee, made the proper statement of unintentional delay, and submitted the required reply in the form of an Amendment.

The matter is being forwarded to Group Art Unit 2871 for consideration of the Amendment filed June 1, 2007.

Telephone inquiries concerning this decision should be directed to the undersigned at (571)272-3207.

Cliff Congo
Petitions Attorney
Office of Petitions

UNITED STATES PATENT AND TRADEMARK OFFICE

Commissioner for Patents
United States Patent and Trademark Office
P.O. Box 1450
Alexandria, VA 22313-1450
www.uspto.gov

T LESTER WALLACE
6601 KOLL CENTER PARKWAY
SUITE 245
PLEASANTON CA 94566

COPY MAILED

JUL 23 2004

OFFICE OF PETITIONS

In re Application of
David Fritz and Blane Fowler
Application No. 10/619,644
Filed: July 14, 2003
Attorney Docket Number: ZIL-553
Title of Invention: HARDWARE DEBUG DEVICE HAVING SCRIPT-BASED HOST INTERFACE

DECISION GRANTING STATUS UNDER 37 CFR 1.47(a)

This is in response to the petition under 37 CFR 1.47(a), filed June 14, 2004.

The petition is GRANTED.

Petitioner has shown that the non-signing inventor has refused to join in the filing of the above-identified application after having been presented with the application papers. The declaration of Dan Eaton attest a copy of the application was sent to non-signing inventor's last known address. The non-signing inventor's failure to respond to the application mailing sufficiently establishes that he refuses to execute the application papers.

The above-identified application and papers have been reviewed and found in compliance with 37 CFR 1.47(a). This application is hereby accorded Rule 1.47(a) status.

As provided in Rule 1.47(c), this Office will forward notice of this application's filing to the non-signing inventor at the address given in the petition. Notice of the filing of this application will also be published in the Official Gazette.

This application is being forwarded to the Office of Initial Patent Examination for further processing.

Telephone inquiries related to this decision may be directed to the undersigned at (703) 306-0251.

Charlema R. Grant

Charlema R. Grant
Petitions Attorney
Office of Petitions

UNITED STATES PATENT AND TRADEMARK OFFICE

Commissioner for Patents
United States Patent and Trademark Office
P.O. Box 1450
Alexandria, VA 22313-1450
www.uspto.gov

David Fritz
1924 Country Brook
Weatherford, Texas 76086

In re Application of
David Fritz and Blane Fowler
Application No. 10/619,644
Filed: July 14, 2003
Attorney Docket Number: ZIL-553
Title of Invention: HARDWARE DEBUG DEVICE HAVING SCRIPT-BASED HOST INTERFACE

LETTER

COPY MAILED
JUL 2 3 2004
OFFICE OF PETITIONS

Dear Mr. Fritz:

You are named as a joint inventor in the above-identified United States patent application filed under the provisions of 35 U.S.C. § 116 (United States Code) and 37 C.F.R. § 1.47(a), Rules of Practice in Patent Cases. Should a patent be granted on the application you will be designated therein as a joint inventor.

As a named inventor you are entitled to inspect any paper in the file wrapper of the application, order copies of all or any part thereof (at a prepaid cost as per 37 C.F.R. § 1.19) or make your position of record in the application. Alternatively, you may arrange to do any of the preceding through a registered patent attorney or agent presenting written authorization from you. If you care to join the application, counsel of record (see below) would presumably assist you. Joining in the application would entail the filing of an appropriate oath or declaration by you pursuant to 37 C.F.R. § 1.63.

Telephone inquiries regarding this communication should be directed to Petitions Attorney Charlema R. Grant at (703) 306-0251. Requests for information regarding your application should be directed to the File Information Unit at (703) 308-2733. Information regarding how to pay for and order a copy of the application, or a specific paper in the application, should be directed to Certification Division at (703) 308-9726 or 1-800-972-6382 (outside the Washington D.C. area).

Charlema R. Grant

Charlema R. Grant
Petitions Attorney
Office of Petitions

T LESTER WALLACE
6601 KOLL CENTER PARKWAY
SUITE 245
PLEASANTON CA 94566

UNITED STATES PATENT AND TRADEMARK OFFICE

Commissioner for Patents
United States Patent and Trademark Office
P.O. Box 1450
Alexandria, VA 22313-1450
www.uspto.gov

TAYLOR RUSSELL & RUSSELL, P.C.
4807 SPICEWOOD SPRINGS ROAD
BUILDING TWO SUITE 250
AUSTIN TX 78759

COPY MAILED

OCT 18 2005

OFFICE OF PETITIONS

In re Application of	:	
Paul CRUDGE et al.	:	
Application No. 10/619,660	:	ON PETITION
Filed: July 15, 2003	:	
Attorney Docket No. 800752	:	

This is a decision on the petition under 37 CFR 1.137(b), filed August 12, 2005, to revive the above-identified application.

The petition is **GRANTED**.

The application became abandoned for failure to reply in a timely manner to the Office action under Ex parte Quayle, 1935 Dec. Comm'r Pat. 11 (1935), mailed November 16, 2004, which set a shortened statutory period for reply of two (2) months. No extensions of time under the provisions of 37 CFR 1.136(a) were obtained. Accordingly, the application became abandoned on January 17, 2005.

The petition satisfies the conditions for revival pursuant to the provisions of 37 CFR 1.137(b) in that (1) the reply in the form of an amendment; (2) the petition fee of $750; and (3) the required statement of unintentional delay have been received. Accordingly, the reply to the Office action under Ex parte Quayle of November 16, 2004 is accepted as having been unintentionally delayed.

Telephone inquiries concerning this decision should be directed to David A. Bucci at (571) 272-7099 or in his absence, the undersigned at (571) 272-3217.

The application file is being referred to Technology Center AU 2877 for appropriate action on the concurrently filed amendment.

Brian Hearn

Brian Hearn
Petitions Examiner
Office of Petitions

UNITED STATES PATENT AND TRADEMARK OFFICE

Commissioner for Patents
United States Patent and Trademark Office
P.O. Box 1450
Alexandria, VA 22313-1450
www.uspto.gov

CHARLES N.J. RUGGIERO, ESQ.
OHLANDT, GREELEY, RUGGIERO & PERLE, L.L.P.
10th FLOOR
ONE LANDMARK SQUARE
STAMFORD, CT 06901-2682

COPY MAILED

AUG 2 5 2005

OFFICE OF PETITIONS

In re Application of	:	
Charles J. Renz	:	
Application No. 10/619,676	:	ON PETITION
Filed: July 15, 2003	:	
Attorney Docket No. 460.2111USX	:	

This is a decision on the petition under 37 CFR 1.137(a), filed August 11, 2005, which has been treated as a petition under 37 CFR 1.181, to withdraw the holding of abandonment.

The petition is **GRANTED**.

This application became abandoned for failure to timely file a proper reply to the final Office action mailed December 3, 2004. Accordingly, this application became abandoned on March 4, 2005. A Notice of Abandonment was mailed on June 20, 2005.

The showing required to establish non-receipt of an Office communication must include a statement from the practitioner stating that the Office communication was not received by the practitioner and attesting to the fact that a search of the file jacket and docket records indicates that the Office communication was not received. A copy of the docket record where the non-received Office communication would have been entered had it been received and docketed must be attached to and referenced in practitioner's statement. See Withdrawing the Holding of Abandonment When Office Actions Are Not Received; Notice 1156 Off. Gaz. Pat. Office 53 (November 16, 1993).

The required statements and docket records have been submitted. As such, the petition is granted.

The petition fee will be refunded by treasury check.

The file is being forwarded to Technology Center 1700 for review of the amendment, submitted August 11, 2005.

Telephone inquiries concerning this matter may be directed to the undersigned at (571) 272-3228.

Edward J. Tannouse
Petitions Attorney
Office of Petitions
Office of the Deputy Commissioner
for Patent Examination Policy

UNITED STATES PATENT AND TRADEMARK OFFICE

UNITED STATES DEPARTMENT OF COMMERCE
United States Patent and Trademark Office
Address: COMMISSIONER FOR PATENTS
P.O. Box 1450
Alexandria, Virginia 22313-1450
www.uspto.gov

Jason H. Vick
Sheridan Ross, PC
Suite # 1200
1560 Broadway
Denver, CO 80202

Mail Date: 04/20/2010

Applicant	: David M. Krinsky	: DECISION ON REQUEST FOR
Patent Number	: 7570686	: RECALCULATION of PATENT
Issue Date	: 08/04/2009	: TERM ADJUSTMENT IN VIEW
Appliction No	: 10/619,691	: OF WYETH
Filed	: 07/16/2003	:
		:

The Patentee's Request for Recalculation is **DISMISSED.**

This Request is deemed ineligible for consideration for one or more of the following reasons:

(A). The patent for which PTA recalculation is requested is either a design or reissue application or is a reexamination proceeding;

(B). The patent for which PTA recalculation is requested resulted from a utility or plant application filed under 35 USC 111(a) before May 29, 2000 and no CPA filed in the application on/after May 29, 2000;

(C). The patent for which PTA recalculation is requested resulted from an international application in which the international filing date was before May 29, 2000 and no CPA filed in the application on/after May 29, 2000;

(D). The patent for which PTA recalculation is requested issued on/after March 2, 2010;

(E). The Request for Recalculation was filed more than 180 days after the grant date of the patent and the request was not filed within two months of a dismissal of a request for reconsideration of the of the patent term under 37 CFR 1.705(d);

(F). The Request for Recalculation is not solely limited to USPTO pre-Wyeth interpretation of 35 U.S.C. 154(b)(2)(A);

or

(G). A civil action was filed pursuant to 35 U.S.C. 154(b)(4)(A)concerning the same patent at issue in this request.

Patentee may file a reply to this decision dismissing the Request for Recalculation. Patentee must file such reply within one month or thirty days, whichever is longer, of the mail date of the decision dismissing the Request for Recalculation. No fee is required if patentee is asserting in the reply that the dismissal for ineligibility is improper.

Patentee should use document code PET.OP if electronically filing a reply to this dismissal. If the USPTO finds that the request was improperly deemed ineligible, the USPTO will mail applicant a recalculation determination.

Patentee should be aware that in order to preserve the right to review in the United States District Court for the District of Columbia of the USPTO patent term adjustment determination, patentee must ensure that he or she also take the steps required under 35 U.S.C. 154(b)(4)(A). Nothing in the request for recalculation should be construed as providing an alternative time frame for commencing a civil action under 35 U.S.C. 154 (b)(4)(A).

Any questions concerning this decision should be directed to the Office of Patent Legal Administration at 571-272-7702.

UNITED STATES PATENT AND TRADEMARK OFFICE

Commissioner for Patents
United States Patent and Trademark Office
P.O. Box 1450
Alexandria, VA 22313-1450
www.uspto.gov

BORGWARNER INC.
3850 HAMLIN ROAD
AUBURN HILLS MI 48326

COPY MAILED

SEP 20 2005

OFFICE OF PETITIONS

In re Patent of :
Simpson :
Patent No. 6,883,479 :
Issue Date: April 26, 2005 :
Application No. 10/619,693 :
Filing Date: July 15, 2003 :
Attorney Docket No. BW-DKT00047A :

Decision on Petition

This is a decision on the petition under 37 CFR 1.183, filed May 9, 2005 (certificate of mailing date May 5, 2005), to waive the rules and accept the correction of the assignee data on the front page of the above-identified patent. The petition is being treated as a request under 37 CFR 3.81(b) to accept the correction of the assignee data.

The request under 37 CFR 3.81(b) is **granted**.

Effective June 25, 2004, 37 CFR 3.81(b) has been revised to no longer require the correction of the assignee data prior to issuance of the patent. Therefore, a petition to waive the rule is unnecessary. 37 CFR 3.81(b) currently states:

> Any request for issuance of an application in the name of the assignee submitted after the date of payment of the issue fee, and any request for a patent to be corrected to state the name of the assignee, must state that the assignment was submitted for recordation as set forth in § 3.11 before issuance of the patent, and must include a request for a certificate of correction under § 1.323 of this chapter (accompanied by the fee set forth in § 1.20(a)) and the processing fee set forth in § 1.17(i) of this chapter.

In other words, the request under 37 CFR 3.81(b) will be granted when:

(1) a request under 37 CFR 3.81 and the fee set forth in 37 CFR 1.17(i) are filed,
(2) the assignment was submitted for recordation prior to issuance of the patent, and
(3) a request for a certificate of correction and the fee set forth in 37 CFR 1.20(a) are submitted.

Petitioner has met the requirements set forth above. Therefore, the request is granted.

Regarding fees, the fee set forth in 37 CFR 1.17(i) is $130.00. Petitioner was charged $400.00. Therefore, $270.00 will be credited to deposit account no. 02-0910.

Certificates of Correction Branch issued the requested Certificate of Correction on August 10, 2005. Therefore, this application will be returned to Files Repository.

Telephone inquiries should be directed to the undersigned at (571) 272-3230.

E. Shirene Willis

E. Shirene Willis
Petitions Attorney
Office of Petitions

cc: MEGHAN VAN LEEUWEN
BROWN & MICHAELS, P.C.
400 M&T BANK BUILDING
118 N. TIOGA ST.
ITHACA, NY 14850

UNITED STATES PATENT AND TRADEMARK OFFICE

COMMISSIONER FOR PATENTS
UNITED STATES PATENT AND TRADEMARK OFFICE
P.O. BOX 1450
ALEXANDRIA, VA 22313-1450
www.uspto.gov

KENSEY NASH CORPORATION
735 PENNSYLVANIA DRIVE
EXTON PA 19341

COPY MAILED

DEC 20 2007

OFFICE OF PETITIONS

In re Application of :
Ringeisen :
Application No. 10/619,721 : DECISION ON PETITION
Filed: July 15, 2003 :
Docket No.: KN P 0065 :

This is a decision on the petition under 37 CFR 1.137(a), filed October 26, 2007, to revive the above-identified application. This matter is, *sua sponte*, treated under 37 CFR 1.181 as a petition withdraw the holding of abandonment.

The application was held abandoned for failure to timely submit a properly reply to the non-final Office action mailed April 18, 2007. The non-final Office action set a one month statutory period of time for reply. This decision precedes Notice of Abandonment.

Petitioner asserts non-receipt of the non-final Office action.

DECISION UNDER 37 CFR 1.181

In the absence of any irregularity in the mailing of an Office communication, there is a strong presumption that the Office communication was properly mailed to practitioner at the address of record. This presumption may be overcome by a showing that the Office communication was not in fact received. The showing required to establish non-receipt of an Office communication must include a statement from the practitioner stating that the Office communication was not received by the practitioner and attesting to the fact that a search of the file jacket and docket records indicates that the Office communication was not received. A copy of the docket record where the non-received Office communication would have been entered had it been received and docketed must be attached to and referenced in practitioner's statement. *See*, MPEP 711.03(c). The showing outlined above may not be sufficient if there are circumstances that point to a conclusion that the Office communication may have been lost after receipt rather than a conclusion that the Office communication was lost in the mail.

The arguments and supporting documentation presented have been carefully considered. Moreover, petitioner has included a copy of a docket report covering the time period that a response would have been due had it been received. In view thereof, the evidence presented support the conclusion that the non-final Office action was not received.

In view thereof the Notice of Abandonment is hereby **VACATED** and the holding of abandonment is **WITHDRAWN**.

The application file is being forwarded to Technology Center 3700 further processing of the response to the non-final Office action submitted herewith.

DECISION UNDER 37 CFR 1.137(a)

A grantable petition under 37 CFR 1.137(a) must be accompanied by: (1) the required reply, unless previously filed; (2) the petition fee as set forth in 37 CFR 1.17(l); (3) a showing to the satisfaction of the Commissioner that the entire delay in filing the required reply from the due date for the reply until the filing of a grantable petition pursuant to 37 CFR 1.137(a) was unavoidable; and (4) any terminal disclaimer (and fee as set forth in 37 CFR 1.20(d)) required pursuant to 37 CFR 1.137(c).

In view of the above findings of fact, the petition under 37 CFR 1.137(a) is **DISMISSED AS MOOT**.

Petitioner may request a refund of the $255.00 petition fee submitted herewith in view of the decisions set forth herein. Petitioner may request a refund of the petition fee by writing to the Finance Office, Refund Section. A copy of this decision should accompany any request for refund.

Telephone inquiries concerning this matter may be directed to the undersigned at 571-272-3205.

Alesia M. Brown
Petitions Attorney
Office of Petitions

UNITED STATES PATENT AND TRADEMARK OFFICE

Commissioner for Patents
United States Patent and Trademark Office
P.O. Box 1450
Alexandria, VA 22313-1450
www.uspto.gov

PATENT CENTRAL LLC
Stephan A. Pendorf
1401 Hollywood Boulevard
Hollywood FL 33020

MAILED

NOV 0 9 2009

OFFICE OF PETITIONS

In re Application of	:	
Emilio J.A. Roldan, et al.	:	
Application No. 10/619,729	:	ON PETITION
Filed: July 15, 2003	:	
Attorney Docket No. 3524.015	:	

This is a decision on the petition under the unintentional provisions of 37 CFR 1.137(b), filed May 11, 2009, to revive the above-identified application.

The petition is **GRANTED**.

The application became abandoned for failure to timely file a reply within the meaning of 37 CFR 1.113 to the final Office action of March 18, 2008. The proposed reply required for consideration of a petition to revive must be a Notice of Appeal (and appeal fee required by 37 CFR 41.20(b)(2), an amendment that *prima facie* places the application in condition for allowance, a Request for Continued Examination and submission (37 CFR 1.114), or the filing of a continuing application under 37 CFR 1.53(b). See MPEP 711.03(c)(III)(A)(2). No extensions of time pursuant to the provisions of 37 CFR 1.136(a) was obtained. Accordingly, the date of abandonment of this application is June 19, 2008. The Notice of Abandonment was mailed March 9, 2009.

The petition satisfies the requirements of 37 CFR 1.137(b) in that petitioner has supplied (1) the reply in the form of a Request for Continued Examination (RCE) and fee of $810 and the submission required by 37 CFR 1.114; (2) the petition fee of $1,620; and (3) a proper statement of unintentional delay.

Telephone inquiries concerning this decision should be directed to the undersigned at (571) 272-2991.

This application is being referred to Technology Center AU 1623 for processing of the RCE and for appropriate action by the Examiner in the normal course of business on the amendment submitted in accordance with 37 CFR 1.114.

Terri Johnson

Terri Johnson
Petitions Examiner
Office of Petitions

UNITED STATES PATENT AND TRADEMARK OFFICE

UNITED STATES DEPARTMENT OF COMMERCE
United States Patent and Trademark Office
Address: COMMISSIONER FOR PATENTS
P.O. Box 1450
Alexandria, Virginia 22313-1450
www.uspto.gov

APPL NO.	FILING OR 371 (c) DATE	ART UNIT	FIL FEE REC'D	ATTY.DOCKET NO	DRAWINGS	TOT CLMS	IND CLMS
10/619,731	07/15/2003	1725	689	SENS.007US1	5	29	7

CONFIRMATION NO. 7022

PARSONS HSUE & DE RUNTZ LLP
SUITE 1800
655 MONTGOMERY STREET
SAN FRANCISCO, CA 94111

CORRECTED FILING RECEIPT

OC000000011516712

Date Mailed: 01/05/2004

Receipt is acknowledged of this regular Patent Application. It will be considered in its order and you will be notified as to the results of the examination. Be sure to provide the U.S. APPLICATION NUMBER, FILING DATE, NAME OF APPLICANT, and TITLE OF INVENTION when inquiring about this application. Fees transmitted by check or draft are subject to collection. Please verify the accuracy of the data presented on this receipt. **If an error is noted on this Filing Receipt, please write to the Office of Initial Patent Examination's Filing Receipt Corrections, facsimile number 703-746-9195. Please provide a copy of this Filing Receipt with the changes noted thereon. If you received a "Notice to File Missing Parts" for this application, please submit any corrections to this Filing Receipt with your reply to the Notice. When the USPTO processes the reply to the Notice, the USPTO will generate another Filing Receipt incorporating the requested corrections (if appropriate).**

Applicant(s)

Wayne Glenn Renken, San Jose, CA;

Domestic Priority data as claimed by applicant

This application is a CIP of 10/100,934 03/18/2002

Foreign Applications

UNITED STATES OF AMERICA PCT/US03/08464 03/18/2003

If Required, Foreign Filing License Granted: 10/09/2003

Projected Publication Date: 03/25/2004

Non-Publication Request: No

Early Publication Request: No

**** SMALL ENTITY ****

Title

System and method for heating and cooling wafer at accelerated rates

Preliminary Class

219

LICENSE FOR FOREIGN FILING UNDER
Title 35, United States Code, Section 184
Title 37, Code of Federal Regulations, 5.11 & 5.15

GRANTED

The applicant has been granted a license under 35 U.S.C. 184, if the phrase "IF REQUIRED, FOREIGN FILING LICENSE GRANTED" followed by a date appears on this form. Such licenses are issued in all applications where the conditions for issuance of a license have been met, regardless of whether or not a license may be required as set forth in 37 CFR 5.15. The scope and limitations of this license are set forth in 37 CFR 5.15(a) unless an earlier license has been issued under 37 CFR 5.15(b). The license is subject to revocation upon written notification. The date indicated is the effective date of the license, unless an earlier license of similar scope has been granted under 37 CFR 5.13 or 5.14.

This license is to be retained by the licensee and may be used at any time on or after the effective date thereof unless it is revoked. This license is automatically transferred to any related applications(s) filed under 37 CFR 1.53(d). This license is not retroactive.

The grant of a license does not in any way lessen the responsibility of a licensee for the security of the subject matter as imposed by any Government contract or the provisions of existing laws relating to espionage and the national security or the export of technical data. Licensees should apprise themselves of current regulations especially with respect to certain countries, of other agencies, particularly the Office of Defense Trade Controls, Department of State (with respect to Arms, Munitions and Implements of War (22 CFR 121-128)); the Office of Export Administration, Department of Commerce (15 CFR 370.10 (j)); the Office of Foreign Assets Control, Department of Treasury (31 CFR Parts 500+) and the Department of Energy.

NOT GRANTED

No license under 35 U.S.C. 184 has been granted at this time, if the phrase "IF REQUIRED, FOREIGN FILING LICENSE GRANTED" DOES NOT appear on this form. Applicant may still petition for a license under 37 CFR 5.12, if a license is desired before the expiration of 6 months from the filing date of the application. If 6 months has lapsed from the filing date of this application and the licensee has not received any indication of a secrecy order under 35 U.S.C. 181, the licensee may foreign file the application pursuant to 37 CFR 5.15(b).

UNITED STATES PATENT AND TRADEMARK OFFICE

Commissioner for Patents
United States Patent and Trademark Office
P.O. Box 1450
Alexandria, VA 22313-1450
www.uspto.gov

DAVID A. JAKOPIN
PILLSBURY WINTHROP LLP
2475 HANOVER STREET
PALO ALTO, CA 94304

COPY MAILED

DEC 0 2 2004

OFFICE OF PETITIONS

In re Application of :
Scott Bradley et al :
Application No. 10/619,750 :
Filed: July 14, 2003 :
Attorney Docket No. 067810/0304489/PI-021

NOTICE

This is a notice regarding your request for acceptance of a fee deficiency submission under 37 CFR 1.28. On September 1, 1998, the Court of Appeals for the Federal Circuit held that 37 CFR 1.28(c) is the sole provision governing the time for correction of the erroneous payment of the issue fee as a small entity. **See DH Technology v. Synergystex International, Inc. 154 F.3d 1333, 47 USPQ2d 1865 (Fed. Cir. Sept. 1, 1998).**

The Office no longer investigates or rejects original or reissue applications under 37 CFR 1.56. **1098 Off. Gaz. Pat. Office 502 (January 3, 1989).** Therefore, nothing in this Notice is intended to imply that an investigation was done.

Your fee deficiency submission under 37 CFR 1.28 is hereby **ACCEPTED**.

Inquiries related to this communication should be directed to Irvin Dingle at (571) 272-3210.

Irvin Dingle
Petitions Examiner
Office of Petitions
Office of the Deputy Commissioner
for Patent Examination Policy

NOTICE RE: CERTIFICATES OF CORRECTION

DATE : 4/19/05 Paper No.: _____

TO : Supervisor, Art Unit 3748

SUBJECT : Certificate of Correction Request in Patent No.: 10/619,767 6,821,092 B1

A response to the following question is requested with respect to the accompanying request for a certificate of correction.

With respect to the change(s) requested, correcting Office and/or Applicant's errors, should the patent read as shown in the certificate of correction? No new matter should be introduced, nor should the scope or meaning of the claims be changed.

PLEASE COMPLETE THIS FORM AND RETURN WITH FILE, WITHIN 7 DAYS, TO CERTIFICATES OF CORRECTION BRANCH - PK 3-915/922 PALM LOCATION 7580 - TEL. NO. 305-8309

A. Green

THANK YOU FOR YOUR ASSISTANCE!

Note your decision by placing a check mark in the appropriate box below, indicating whether all changes requested in the Request for Certificate of Correction should be applied. Please specify which changes should not be applied and indicate the reason(s) for denial, in the "Comments" section below.

☑ YES ☐ NO

☑ Comments: ALL CHANGES REQUESTED IN THE REQUEST FOR CERTIFICATE OF CORRECTION HAVE BEEN APPROVED.

THOMAS DENION
SUPERVISORY PATENT EXAMINER
TECHNOLOGY CENTER 3700
Supervisor

Thomas Denion

3748
Art Unit

UNITED STATES PATENT AND TRADEMARK OFFICE

Commissioner for Patents
United States Patent and Trademark Office
P.O. Box 1450
Alexandria, VA 22313-1450
www.uspto.gov

DINSMORE & SHOHL, LLP
1900 CHEMED CENTER
255 EAST FIFTH STREET
CINCINNATI, OH 45202

COPY MAILED

AUG 0 8 2005

OFFICE OF PETITIONS

In re Application of	:	
Thomas E. Jackson, Dwayne Mattox and	:	
Randy L. Spangler	:	
Application No. 10/619,775	:	DECISION GRANTING PETITION
Filed: July 15, 2003	:	UNDER 37 CFR 1.47(a)
Title: DOLLY DEVICE FOR LOADING	:	
CONTAINERS	:	

This is in response to the "Petition Under 37 CFR 1.47(a)," filed July 15, 2003. The petition was recently forwarded to this office for review.

The petition is **granted**.

Petitioner has shown that the non-signing inventor cannot be found or reached "after diligent effort."

The above-identified application and papers have been reviewed and found in compliance with 37 CFR 1.47(a). This application is hereby accorded Rule 1.47(a) status. As provided in Rule 1.47(c), this Office will forward notice of this application's filing to the non-signing inventor at the address given in the petition. Notice of the filing of this application will also be published in the Official Gazette.

The file is being returned to Technology Center 3600 for further examination *in due course.*

Telephone inquiries regarding this decision should be directed to the undersigned at (571) 272-3228.

Edward J. Tannouse
Petitions Attorney
Office of Petitions/Patent
United States Patent and Trademark Office

UNITED STATES PATENT AND TRADEMARK OFFICE

Commissioner for Patents
United States Patent and Trademark Office
P.O. Box 1450
Alexandria, VA 22313-1450
www.uspto.go

DWAYNE MATTOX
1217 COLORADO ROAD
LEXINGTON, KY 40509

COPY MAILED

AUG 0 8 2005

OFFICE OF PETITIONS

In re Application of
Thomas E. Jackson, Dwayne Mattox and Randy L. Spangler
Application No. 10/619,775
Filed: July 15, 2003
Title: DOLLY DEVICE FOR LOADING CONTAINERS

Dear DWAYNE MATTOX:

You are named as a joint inventor in the above identified United States patent application, filed under the provisions of 35 U.S.C. 116 (United States Code), and 37 CFR 1.47(a), Rules of Practice in Patent Cases. Should a patent be granted on the application you will be designated therein as a joint inventor.

As a named inventor you are entitled to inspect any paper in the file wrapper of the application, order copies of all or any part thereof (at a prepaid cost per 37 CFR 1.19) or make your position of record in the application. Alternatively, you may arrange to do any of the preceding through a registered patent attorney or agent presenting written authorization from you. If you care to join the application, counsel of record (see below) would presumably assist you. Joining in the application would entail the filing of an appropriate oath or declaration by you pursuant to 37 CFR 1.63.

Telephone inquiries regarding this communication should be directed to the undersigned at (571) 272-3228. Requests for information regarding your application should be directed to the File Information Unit at (703) 308-2733. Information regarding how to pay for and order a copy of the application, or a specific paper in the application, should be directed to Certification Division at (703) 308-9726 or 1 (800) 972-6382 (outside the Washington D.C. area).

Edward J. Tannouse
Petitions Attorney
Office of Petitions/Patent
United States Patent and Trademark Office

DINSMORE & SHOHL, LLP
1900 CHEMED CENTER
255 EAST FIFTH STREET
CINCINNATI, OH 45202

UNITED STATES PATENT AND TRADEMARK OFFICE

Commissioner for Patents
United States Patent and Trademark Office
P.O. Box 1450
Alexandria, VA 22313-1450
www.uspto.gov

HAYNES BEFFEL & WOLFELD LLP
P.O. BOX 366
HALF MOON BAY CA 94019

COPY MAILED

JUN 18 2009

OFFICE OF PETITIONS

In re Application of	:	
Subir Ghosh et al	:	DECISION GRANTING STATUS
Application No. 10/619,798	:	UNDER 37 CFR 1.47(a)
Filed: July 15, 2003	:	
Attorney Docket No. OPTI 3140-6	:	

This is in response to the petition filed December 5, 2007 entitled, "PETITION UNDER 37 CFR 1.183 REQUESTING WAIVER OF SIGNATURE OF UNAVAILABLE INVENTOR H.T. TUNG FOR SECOND DECLARATION UNDER 37 CFR 1.131(b), which is properly being treated as a petition under 37 CFR 1.47(a).

The petition is **DISMISSED** as Moot.

The petition is dismissed as moot because the Office is in receipt of a copy of an executed declaration submitted with the application on July 15, 2003. The transmittal letter submitted with the above application on July 15, 2003 indicates that a copy of the oath or declaration from Parent Application No. 10/013,216 (in which the instant application is a continuation of) was provided. The copy of the declaration bears the signature of joint inventor Hsu-Tien Tung. Therefore, the instant petition is dismissed as moot.

If this is an incorrect interpretation by the Office, petitioner should notify the Office in writing.

The Office sincerely apologizes for the delay in replying to the above petition.

It is noted that the instant application is abandoned through the filing of a declaration of express abandonment by applicant. Accordingly, no further action will be taken in this application.

Telephone inquiries regarding this decision should be directed to the undersigned at (571) 272-3208.

/Karen Creasy/
Karen Creasy
Petitions Examiner
Office of Petitions

UNITED STATES PATENT AND TRADEMARK OFFICE

Commissioner for Patents
United States Patent and Trademark Office
P.O. Box 1450
Alexandria, VA 22313-1450
www.uspto.gov

ARNALL GOLDEN GREGORY LLP
171 17th STREET
SUITE 2100
ATLANTA, GA 30363

COPY MAILED

NOV 07 2005

OFFICE OF PETITIONS

In re Application of :
Tracy, et al. :
Application No. 10/619,812 :
Filed: July 15, 2003 :
Attorney Docket No. 29757/AG40-CON :

ON PETITION

This is a decision on the petition under 37 CFR 1.181, filed May 13, 2005, to withdraw the holding of abandonment. The petition was recently forwarded to this office for review.

The petition is **GRANTED**.

This application became abandoned for failure to timely file a proper reply to the final Office action mailed June 23, 2004. Accordingly, this application became abandoned on September 24, 2004. A Notice of Abandonment was mailed on March 31, 2005.

Petitioner asserts that a "Request for Continued Examination" (RCE) with an amendment and response were timely submitted on August 26, 2004. In support, petitioner has submitted a copy of the originally filed RCE, amendment and response. The RCE, amendment and response each contain an executed Certificate of Mailing under 37 CFR 1.8 dated August 26, 2004. Additionally, a copy of applicants' postcard receipt that acknowledges receipt of an "Amendment and Response and Request for Cont'd Examination" on August 30, 2004, accompanied the petition.

Accordingly, the petition is granted and the holding of abandonment is withdrawn.

Please note, the application file does not indicate a change of address has been filed in this case, although the address given on the petition differs from the address of record. A change of address should be filed in this case in accordance with MPEP 601.03. A courtesy copy of this decision is being mailed to the address noted on the petition. However, until otherwise instructed, all future correspondence regarding this application will be mailed solely to the address of record.

This application is being forwarded to Technology Center 3700, for review of the RCE and amendment and response, filed May 13, 2005 (originally filed August 30, 2004).

Telephone inquiries concerning this matter may be directed to the undersigned at (571) 272-3228.

Edward J. Tannouse
Petitions Attorney
Office of Petitions
Office of the Deputy Commissioner
for Patent Examination Policy

cc.
CARLTON FIELDS, PA
1201 WEST PEACHTREE STREET
3000 ONE ATLANTIC CENTER
ATLANTA, GA 30309

SPE RESPONSE FOR CERTIFICATE OF CORRECTION

Paper No.: _____

DATE : 1/24/2007

TO SPE OF : ART UNIT 3714

SUBJECT : Request for Certificate of Correction on Patent No.: 7018292 (Application No. 10619812

A response is requested with respect to a request for a certificate of correction.

With respect to the change(s) requested to correct Office and/or Applicant's errors, should the patent read as shown in the certificate of correction attached herewith or the COCIN document(s), in IFW images for the application? No new matter should be introduced, nor should the scope or meaning of the claims be changed.

If the request is for an IFW, within **7** days, please complete and forward the response, to the employee (named below) via scanning into application images, using document code COCX.

If the request is for a paper file wrapper, please complete the response with the paper file wrapper, to the employee (named below), within **7** days, to:

Certificates of Correction Branch
South Tower
Palm location 7580

Valerie Jackson
Certificates of Correction Branch
703-308-9390 ext. 114

Thank You For Your Assistance

The request for issuing the above-identified correction(s) is hereby:
Note your decision on the appropriate box.

- ☒ **Approved** — **All** changes apply.
- ☐ **Approved in Part** — Specify below which changes **do not** apply.
- ☐ **Denied** — State the reasons for denial below.

Comments: _____

1/25/07

ROBERT OLSZEWSKI
SUPERVISORY PATENT EXAMINER
TECHNOLOGY CENTER 3700

SPE

3714
Art Unit

UNITED STATES PATENT AND TRADEMARK OFFICE

Commissioner for Patents
United States Patent and Trademark Office
P.O. Box 1450
Alexandria, VA 22313-1450
www.uspto.gov

CADWALADER, WICKERSHAM & TAFT LLP
ONE WORLD FINANCIAL CENTER
NEW YORK NY 10281

COPY MAILED

DEC 11 2009

OFFICE OF PETITIONS

In re Application of	:	
Richter et al.	:	
Application No. 10/619,837	:	DECISION ON PETITION
Filed: July 14, 2003	:	
Attorney Docket No. 92077.003US7	:	

This is a decision on the petition under 37 CFR 1.182, filed October 21, 2009, to change the order of the names of the inventors. This is also a decision on the petition under 37 CFR 1.182, filed November 23, 2009, to expedite consideration of the petition to change the order of the names of the inventors.

The petitions are **GRANTED**.

The requirements of 37 CFR 1.182 to expedite the petition to change the order of the names of the inventors have been satisfied. Accordingly, the request to change the order of the names of the inventors has been processed promptly.

Office records have been corrected to reflect the change in the order of the named inventors. A corrected Filing Receipt, which sets forth the desired order of the named inventors, accompanies this decision on petition.

As authorized, the $400.00 fee for the petition to change the order of the names of the inventors and the additional $400.00 fee to expedite consideration of the petition to change the order of the names of the inventors have been assessed to petitioner's deposit account.

This application is being referred to the Office of Data Management for processing into a patent.

Telephone inquiries regarding this decision should be directed to the undersigned at (571) 272-6692.

Christopher Bottorff
Petitions Examiner
Office of Petitions

ATTACHMENT: Corrected Filing Receipt

UNITED STATES PATENT AND TRADEMARK OFFICE

UNITED STATES DEPARTMENT OF COMMERCE
United States Patent and Trademark Office
Address: COMMISSIONER FOR PATENTS
P.O. Box 1450
Alexandria, Virginia 22313-1450
www.uspto.gov

APPLICATION NUMBER	FILING or 371(c) DATE	GRP ART UNIT	FIL FEE REC'D	ATTY.DOCKET.NO	TOT CLAIMS	IND CLAIMS
10/619,837	07/14/2003	3773	3820	92077.003US7	102	18

CONFIRMATION NO. 7636

CORRECTED FILING RECEIPT

75004
CADWALADER, WICKERSHAM & TAFT LLP
ONE WORLD FINANCIAL CENTER
NEW YORK, NY 10281

OC000000039161066

Date Mailed: 12/10/2009

Receipt is acknowledged of this non-provisional patent application. The application will be taken up for examination in due course. Applicant will be notified as to the results of the examination. Any correspondence concerning the application must include the following identification information: the U.S. APPLICATION NUMBER, FILING DATE, NAME OF APPLICANT, and TITLE OF INVENTION. Fees transmitted by check or draft are subject to collection. Please verify the accuracy of the data presented on this receipt. **If an error is noted on this Filing Receipt, please submit a written request for a Filing Receipt Correction. Please provide a copy of this Filing Receipt with the changes noted thereon. If you received a "Notice to File Missing Parts" for this application, please submit any corrections to this Filing Receipt with your reply to the Notice. When the USPTO processes the reply to the Notice, the USPTO will generate another Filing Receipt incorporating the requested corrections**

Applicant(s)

Jacob Richter, Ramat Hasharon, ISRAEL;
Gregory Pinchasik, Herzeliya, ISRAEL;

Power of Attorney:
Dorothy Auth--36434
Christopher Hughes--26914

Domestic Priority data as claimed by applicant

This application is a CON of 09/516,753 03/01/2000 PAT 7,141,062

Foreign Applications

If Required, Foreign Filing License Granted: 10/09/2003

The country code and number of your priority application, to be used for filing abroad under the Paris Convention, is **US 10/619,837**

Projected Publication Date: Not Applicable

Non-Publication Request: No

Early Publication Request: No

Title

LONGITUDINALLY FLEXIBLE STENT

Preliminary Class

623

PROTECTING YOUR INVENTION OUTSIDE THE UNITED STATES

Since the rights granted by a U.S. patent extend only throughout the territory of the United States and have no effect in a foreign country, an inventor who wishes patent protection in another country must apply for a patent in a specific country or in regional patent offices. Applicants may wish to consider the filing of an international application under the Patent Cooperation Treaty (PCT). An international (PCT) application generally has the same effect as a regular national patent application in each PCT-member country. The PCT process **simplifies** the filing of patent applications on the same invention in member countries, but **does not result** in a grant of "an international patent" and does not eliminate the need of applicants to file additional documents and fees in countries where patent protection is desired.

Almost every country has its own patent law, and a person desiring a patent in a particular country must make an application for patent in that country in accordance with its particular laws. Since the laws of many countries differ in various respects from the patent law of the United States, applicants are advised to seek guidance from specific foreign countries to ensure that patent rights are not lost prematurely.

Applicants also are advised that in the case of inventions made in the United States, the Director of the USPTO must issue a license before applicants can apply for a patent in a foreign country. The filing of a U.S. patent application serves as a request for a foreign filing license. The application's filing receipt contains further information and guidance as to the status of applicant's license for foreign filing.

Applicants may wish to consult the USPTO booklet, "General Information Concerning Patents" (specifically, the section entitled "Treaties and Foreign Patents") for more information on timeframes and deadlines for filing foreign patent applications. The guide is available either by contacting the USPTO Contact Center at 800-786-9199, or it can be viewed on the USPTO website at http://www.uspto.gov/web/offices/pac/doc/general/index.html.

For information on preventing theft of your intellectual property (patents, trademarks and copyrights), you may wish to consult the U.S. Government website, http://www.stopfakes.gov. Part of a Department of Commerce initiative, this website includes self-help "toolkits" giving innovators guidance on how to protect intellectual property in specific countries such as China, Korea and Mexico. For questions regarding patent enforcement issues, applicants may call the U.S. Government hotline at 1-866-999-HALT (1-866-999-4158).

LICENSE FOR FOREIGN FILING UNDER

Title 35, United States Code, Section 184

Title 37, Code of Federal Regulations, 5.11 & 5.15

GRANTED

The applicant has been granted a license under 35 U.S.C. 184, if the phrase "IF REQUIRED, FOREIGN FILING LICENSE GRANTED" followed by a date appears on this form. Such licenses are issued in all applications where the conditions for issuance of a license have been met, regardless of whether or not a license may be required as

set forth in 37 CFR 5.15. The scope and limitations of this license are set forth in 37 CFR 5.15(a) unless an earlier license has been issued under 37 CFR 5.15(b). The license is subject to revocation upon written notification. The date indicated is the effective date of the license, unless an earlier license of similar scope has been granted under 37 CFR 5.13 or 5.14.

This license is to be retained by the licensee and may be used at any time on or after the effective date thereof unless it is revoked. This license is automatically transferred to any related applications(s) filed under 37 CFR 1.53(d). This license is not retroactive.

The grant of a license does not in any way lessen the responsibility of a licensee for the security of the subject matter as imposed by any Government contract or the provisions of existing laws relating to espionage and the national security or the export of technical data. Licensees should apprise themselves of current regulations especially with respect to certain countries, of other agencies, particularly the Office of Defense Trade Controls, Department of State (with respect to Arms, Munitions and Implements of War (22 CFR 121-128)); the Bureau of Industry and Security, Department of Commerce (15 CFR parts 730-774); the Office of Foreign AssetsControl, Department of Treasury (31 CFR Parts 500+) and the Department of Energy.

NOT GRANTED

No license under 35 U.S.C. 184 has been granted at this time, if the phrase "IF REQUIRED, FOREIGN FILING LICENSE GRANTED" DOES NOT appear on this form. Applicant may still petition for a license under 37 CFR 5.12, if a license is desired before the expiration of 6 months from the filing date of the application. If 6 months has lapsed from the filing date of this application and the licensee has not received any indication of a secrecy order under 35 U.S.C. 181, the licensee may foreign file the application pursuant to 37 CFR 5.15(b).

UNITED STATES PATENT AND TRADEMARK OFFICE

Commissioner for Patents
United States Patent and Trademark Office
P.O. Box 1450
Alexandria, VA 22313-1450
www.uspto.gov

COPY MAILED

OCT 21 2009

OFFICE OF PETITIONS

CENTURY IP GROUP, INC. [Main]
P.O. BOX 7333
NEWPORT BEACH, CA 92658-7333

In re Application of	:	
Amit Haller, et al.	:	
Application No. 10/619,857	:	DECISION ON PETITION
Filed: July 14, 2003	:	TO WITHDRAW
Attorney Docket No. 1005-36-01 USP	:	FROM RECORD
	:	

This is a decision on the Request to Withdraw as attorney or agent of record under 37 C.F.R. § 1.36(b), filed September 3, 2009.

The request is **APPROVED**.

A grantable request to withdraw as attorney/agent of record must be signed by every attorney/agent seeking to withdraw or contain a clear indication that one attorney is signing on behalf of another/others.

The request was signed by F. Jason Far-Hadian on behalf of all attorneys of record who are associated with customer No. 42698. All attorneys/agents associated with the Customer Number 42698 have been withdrawn. Applicant is reminded that there is no attorney of record at this time.

The correspondence address of record has been changed and the new correspondence address is the address indicated below.

The application became abandoned for failure to timely respond to the outstanding Office action mailed January 22, 2009.

Telephone inquiries concerning this decision should be directed to undersigned at 571-272-1642. All other inquiries concerning the examination or status of this application should be directed to the Technology Center.

/AMW/
April M. Wise
Petitions Examiner
Office of Petitions

cc: IXI MOBILE (R&D), LTD
PO BOX 2543
17 HA 'TIDHAR ST
RA'ANANA 43665 ISRAEL

UNITED STATES PATENT AND TRADEMARK OFFICE

UNITED STATES DEPARTMENT OF COMMERCE
United States Patent and Trademark Office
Address: COMMISSIONER FOR PATENTS
P.O. Box 1450
Alexandria, Virginia 22313-1450
www.uspto.gov

APPLICATION NUMBER	FILING OR 371(C) DATE	FIRST NAMED APPLICANT	ATTY. DOCKET NO./TITLE
10/619,857	07/14/2003	Amit Haller	1005-36-01 USP

CONFIRMATION NO. 7751

POWER OF ATTORNEY NOTICE

42698
CENTURY IP GROUP, INC. [Main]
P.O. BOX 7333
NEWPORT BEACH, CA 92658-7333

OC000000038233661

Date Mailed: 10/13/2009

NOTICE REGARDING CHANGE OF POWER OF ATTORNEY

This is in response to the Power of Attorney filed 09/03/2009.

- The withdrawal as attorney in this application has been accepted. Future correspondence will be mailed to the new address of record. 37 CFR 1.33.

/amwise/

Office of Data Management, Application Assistance Unit (571) 272-4000, or (571) 272-4200, or 1-888-786-0101

UNITED STATES PATENT AND TRADEMARK OFFICE

Commissioner for Patents
United States Patent and Trademark Office
P.O. Box 1450
Alexandria, VA 22313-1450
www.uspto.gov

PATRICK G. BURNS, ESQ.
GREER, BURNS & CRAIN, LTD.
300 SOUTH WACKER DRIVE
SUITE 2500
CHICAGO, IL 60606

COPY MAILED

DEC 0 8 2006

OFFICE OF PETITIONS

In re Application of	:	
Minoru Hasegawa et al	:	
Application No. 10/619,859	:	DECISION ON PETITION
Filed: July 15, 2003	:	UNDER 37 CFR 1.78(a)(3)
Attorney Docket No. 2500.68176	:	

This is a decision on the petition under 37 CFR 1.78(a)(3), filed June 7, 2006, to accept an unintentionally delayed claim under 35 U.S.C. §§ 120 and 365(c) for the benefit of priority to prior-filed international Application No. PCT/JP01/00191, filed January 15, 2001, as set forth in the amendment to the first line of the specification filed on April 8, 2004 (certificate of mailing date of April 2, 2004).

The petition is **GRANTED.**

A petition for acceptance of a claim for late priority under 37 CFR 1.78(a)(3) is only applicable to those applications filed on or after November 29, 2000. Further, the petition is appropriate only after the expiration of the period specified in 37 CFR 1.78(a)(2)(ii). In addition, the petition under 37 CFR 1.78(a)(3) must be accompanied by:

(1) the reference required by 35 U.S.C. § 120 and 37 CFR 1.78(a)(2)(i) of the prior-filed application, unless previously submitted;
(2) the surcharge set forth in § 1.17(t); and
(3) a statement that the entire delay between the date the claim was due under 37 CFR 1.78(a)(2)(ii) and the date the claim was filed was unintentional. The Director may require additional information where there is a question whether the delay was unintentional.

All of the above requirements having been satisfied, the late claim for benefit of priority under 35 U.S.C. §§ 120 and 365(c) to the above-noted, prior-field PCT application is accepted as being unintentionally delayed.

A corrected Filing Receipt, which includes the priority claim to the prior-filed application, accompanies this decision on petition.

Inquiries concerning this decision on petition should be directed to the undersigned at (571) 272-3218.

The Examiner has initialed the BIB sheet indicating approval of the reference to the prior filed PCT application. Accordingly, as the issue fee has been paid, this application will issue into a patent in due course.[1]

Frances Hicks
Petitions Examiner
Office of Petitions

ATTACHMENT: Corrected Filing Receipt

[1] The status of this application indicates that the printing process may have progressed to the point where it will not be possible to include the priority information on the printed patent. If this occurs, petitioner may request a Certificate of Correction.

UNITED STATES PATENT AND TRADEMARK OFFICE

UNITED STATES DEPARTMENT OF COMMERCE
United States Patent and Trademark Office
Address: COMMISSIONER FOR PATENTS
P.O. Box 1450
Alexandria, Virginia 22313-1450
www.uspto.gov

APPL NO.	FILING OR 371 (c) DATE	ART UNIT	FIL FEE REC'D	ATTY.DOCKET NO	DRAWINGS	TOT CLMS	IND CLMS
10/619,859	07/15/2003	2627	1134	2500.68176	7	13	4

CONFIRMATION NO. 7727

CORRECTED FILING RECEIPT

OC000000021527860

Patrick G. Burns, Esq.
GREER, BURNS & CRAIN, LTD.
Suite 2500
300 South Wacker Dr.
Chicago, IL 60606

Date Mailed: 12/08/2006

Receipt is acknowledged of this regular Patent Application. It will be considered in its order and you will be notified as to the results of the examination. Be sure to provide the U.S. APPLICATION NUMBER, FILING DATE, NAME OF APPLICANT, and TITLE OF INVENTION when inquiring about this application. Fees transmitted by check or draft are subject to collection. Please verify the accuracy of the data presented on this receipt. **If an error is noted on this Filing Receipt, please mail to the Commissioner for Patents P.O. Box 1450 Alexandria Va 22313-1450. Please provide a copy of this Filing Receipt with the changes noted thereon. If you received a "Notice to File Missing Parts" for this application, please submit any corrections to this Filing Receipt with your reply to the Notice. When the USPTO processes the reply to the Notice, the USPTO will generate another Filing Receipt incorporating the requested corrections (if appropriate).**

Applicant(s)

Minoru Hasegawa, Kawasaki, JAPAN;
Yoshinori Ohtsuka, Kawasaki, JAPAN;

Assignment For Published Patent Application

FUJITSU LIMITED

Power of Attorney: The patent practitioners associated with Customer Number **24978**.

Domestic Priority data as claimed by applicant

This application is a CON of PCT/JP01/00191 01/15/2001

Foreign Applications

If Required, Foreign Filing License Granted: 02/23/2004

The country code and number of your priority application, to be used for filing abroad under the Paris Convention, is US10/619,859

Projected Publication Date: Not Applicable

Non-Publication Request: No

Early Publication Request: No

Title

THIN FILM MAGNETIC HEAD HAVING LOWER AUXILIARY MAGNETIC POLE ON LOWER MAGNETIC POLE LAYER

Preliminary Class

360

PROTECTING YOUR INVENTION OUTSIDE THE UNITED STATES

Since the rights granted by a U.S. patent extend only throughout the territory of the United States and have no effect in a foreign country, an inventor who wishes patent protection in another country must apply for a patent in a specific country or in regional patent offices. Applicants may wish to consider the filing of an international application under the Patent Cooperation Treaty (PCT). An international (PCT) application generally has the same effect as a regular national patent application in each PCT-member country. The PCT process **simplifies** the filing of patent applications on the same invention in member countries, but **does not result** in a grant of "an international patent" and does not eliminate the need of applicants to file additional documents and fees in countries where patent protection is desired.

Almost every country has its own patent law, and a person desiring a patent in a particular country must make an application for patent in that country in accordance with its particular laws. Since the laws of many countries differ in various respects from the patent law of the United States, applicants are advised to seek guidance from specific foreign countries to ensure that patent rights are not lost prematurely.

Applicants also are advised that in the case of inventions made in the United States, the Director of the USPTO must issue a license before applicants can apply for a patent in a foreign country. The filing of a U.S. patent application serves as a request for a foreign filing license. The application's filing receipt contains further information and guidance as to the status of applicant's license for foreign filing.

Applicants may wish to consult the USPTO booklet, "General Information Concerning Patents" (specifically, the section entitled "Treaties and Foreign Patents") for more information on timeframes and deadlines for filing foreign patent applications. The guide is available either by contacting the USPTO Contact Center at 800-786-9199, or it can be viewed on the USPTO website at http://www.uspto.gov/web/offices/pac/doc/general/index.html.

For information on preventing theft of your intellectual property (patents, trademarks and copyrights), you may wish to consult the U.S. Government website, http://www.stopfakes.gov. Part of a Department of Commerce initiative, this website includes self-help "toolkits" giving innovators guidance on how to protect intellectual property in specific countries such as China, Korea and Mexico. For questions regarding patent enforcement issues, applicants may call the U.S. Government hotline at 1-866-999-HALT (1-866-999-4158).

LICENSE FOR FOREIGN FILING UNDER
Title 35, United States Code, Section 184
Title 37, Code of Federal Regulations, 5.11 & 5.15

GRANTED

The applicant has been granted a license under 35 U.S.C. 184, if the phrase "IF REQUIRED, FOREIGN FILING LICENSE GRANTED" followed by a date appears on this form. Such licenses are issued in all applications where the conditions for issuance of a license have been met, regardless of whether or not a license may be required as set forth in 37 CFR 5.15. The scope and limitations of this license are set forth in 37 CFR 5.15(a) unless an earlier license has been issued under 37 CFR 5.15(b). The license is subject to revocation upon written notification. The date indicated is the effective date of the license, unless an earlier license of similar scope has been granted

under 37 CFR 5.13 or 5.14.

This license is to be retained by the licensee and may be used at any time on or after the effective date thereof unless it is revoked. This license is automatically transferred to any related applications(s) filed under 37 CFR 1.53(d). This license is not retroactive.

The grant of a license does not in any way lessen the responsibility of a licensee for the security of the subject matter as imposed by any Government contract or the provisions of existing laws relating to espionage and the national security or the export of technical data. Licensees should apprise themselves of current regulations especially with respect to certain countries, of other agencies, particularly the Office of Defense Trade Controls, Department of State (with respect to Arms, Munitions and Implements of War (22 CFR 121-128)); the Bureau of Industry and Security, Department of Commerce (15 CFR parts 730-774); the Office of Foreign Assets Control, Department of Treasury (31 CFR Parts 500+) and the Department of Energy.

NOT GRANTED

No license under 35 U.S.C. 184 has been granted at this time, if the phrase "IF REQUIRED, FOREIGN FILING LICENSE GRANTED" DOES NOT appear on this form. Applicant may still petition for a license under 37 CFR 5.12, if a license is desired before the expiration of 6 months from the filing date of the application. If 6 months has lapsed from the filing date of this application and the licensee has not received any indication of a secrecy order under 35 U.S.C. 181, the licensee may foreign file the application pursuant to 37 CFR 5.15(b).

UNITED STATES PATENT AND TRADEMARK OFFICE

UNITED STATES DEPARTMENT OF COMMERCE
United States Patent and Trademark Office
Address: COMMISSIONER FOR PATENTS
P.O. Box 1450
Alexandria, Virginia 22313-1450
www.uspto.gov

SCHWEGMAN, LUNDBERG & WOESSNER, P.A.
P.O. BOX 2938
MINNEAPOLIS, MN 55402

Mail Date: 04/20/2010

Applicant	: Stephen R. Carter	: DECISION ON REQUEST FOR
Patent Number	: 7603481	: RECALCULATION of PATENT
Issue Date	: 10/13/2009	: TERM ADJUSTMENT IN VIEW
Appliction No	: 10/619,886	: OF WYETH AND NOTICE OF INTENT TO
Filed	: 07/15/2003	: ISSUE CERTIFICATE OF CORRECTION
		:

The Request for Recalculation is **GRANTED** to the extent indicated.

The patent term adjustment has been determined to be **1512** days. The USPTO will *sua sponte* issue a certificate of correction reflecting the amount of PTA days determined by the recalculation.

Prior to the issuance of the certificate of correction, the USPTO will afford patentee an opportunity to be heard and request reconsideration. Accordingly, patentee has **one month or thirty (30) days**, whichever is longer, to file a request for reconsideration of this patent term adjustment calculation. See 35 U.S.C. 154(b)(3)(B)(ii) and 37 CFR 1.322(a)(4). No extensions of time will be granted under 37 CFR 1.136.

Patentee should use document code PET.OP if electronically filing a request for reconsideration of this patent term adjustment calculation. The patentee must also include the information required by 37 CFR 1.705(b)(2) and the fee required by 37 CFR 1.18(e). If patentee does not file a timely request for reconsideration of this patent term adjustment calculation including the information required by 37 CFR 1.705(b)(2) and the fee required by 37 CFR 1.18(e), the USPTO will issue a certificate of correction reflecting the PTA determination noted above.

Patentee should be aware that in order to preserve the right to review in the United States District Court for the District of Columbia of the USPTO patent term adjustment determination, patentee must ensure that he or she also take the steps required under 35 U.S.C. 154(b)(4)(A) in a timely manner. Nothing in the request for recalculation should be construed as providing an alternative time frame for commencing a civil action under 35 U.S.C. 154(b)(4)(A).

Any questions concerning this decision should be directed to the Office of Patent Legal Administration at 571-272-7702.

UNITED STATES PATENT AND TRADEMARK OFFICE

COMMISSIONER FOR PATENTS
UNITED STATES PATENT AND TRADEMARK OFFICE
P.O. BOX 1450
ALEXANDRIA, VA 22313-1450
www.uspto.gov

VP
PAPER NO. ___

APR 22 2004

In re Application of
Charles P. McShane et al.
Serial Number: 10/619,893
Filed: July 15, 2003
For: VEGETABLE OIL BASED DIELECTRIC FLUID AND METHODS OF USING SAME

PETITION UNDER M.P.E.P.708.02 V

This is in response to the petition filed January 20, 2004, requesting that the above-identified application be granted Special Status under Section 708.02 V of the MPEP and 37 CFR 1.102(c) (**no fee required**).

The request for Special Status considered under Section 708.02 V is granted because criteria under 37 CFR 1.102(c) has been met.

Accordingly the petition is **GRANTED.**

Marian C. Knode

Marian C. Knode, Special Programs Examiner
Technology Center 1700
Chemical and Materials Engineering

Fish & Richardson P.C., P.A.
60 South Sixth Street, Suite 3300
Minneapolis, MN 55402

UNITED STATES PATENT AND TRADEMARK OFFICE

COMMISSIONER FOR PATENTS
UNITED STATES PATENT AND TRADEMARK OFFICE
P.O. BOX 1450
ALEXANDRIA, VA 22313-1450
www.uspto.gov

Paper No.

Blakely, Sokoloff, Taylor & Zafman
12400 Wilshire Boulevard
7th Floor
Los Angeles, CA 90025

COPY MAILED
MAY 2 6 2004
OFFICE OF PETITIONS

In re Application of
Oded Golan, et al.
Application No. 10/619,900
Filed: July 14, 2003
Attorney Docket No. 5079P023

DECISION GRANTING PETITION
UNDER 37 CFR 1.137(b)

This is a decision on the petition, filed April 27, 2004, which is being treated as a petition under 37 CFR 1.137(b) to revive the instant nonprovisional application for failure to timely notify the U.S. Patent and Trademark (USPTO) of the filing of an application in a foreign country, or under a multinational treaty that requires publication of applications eighteen months after filing. *See* 37 CFR 1.137(f).

The petition is **GRANTED**.

Petitioner states that the instant nonprovisional application is the subject of an application filed in an eighteen-month publication country on August 8, 2003. However, the USPTO was unintentionally not notified of this filing within 45 days subsequent to the filing of the subject application in an eighteen-month publication country.

In view of the above, this application became abandoned pursuant to 35 U.S.C. § 122(b)(2)(B)(iii) and 37 CFR 1.213(c) for failure to timely notify the Office of the filing of an application in a foreign country or under a multilateral international agreement that requires publication of applications 18 months after filing.

A petition to revive an application abandoned pursuant to 35 U.S.C. 122(b)(2)(B)(iii) for failure to notify the USPTO of a foreign filing must be accompanied by:

(1) the required reply which is met by the notification of such filing in a foreign country or under a multinational treaty;
(2) the petition fee as set forth in 37 CFR 1.17(m); and
(3) a statement that the entire delay in filing the required reply from the due date of the reply until the filing of a grantable petition was unintentional.

BEST AVAILABLE COPY

The instant petition has been found to be in compliance with 37 CFR 1.137(b). Accordingly, the failure to timely notify the USPTO of a foreign or international filing within 45 days after the date of filing of such foreign or international application as provided by 35 U.S.C. § 122(b)(2)(B)(iii) and 37 CFR 1.213(c) is accepted as having been unintentionally delayed.

The previous Request and Certification under 35 U.S.C. § 122(b)(2)(B)(i) has been rescinded. A Notice Regarding Rescission of Nonpublication Request which sets forth the projected publication date of September 2, 2004 accompanies this decision on petition.

Telephone inquiries concerning this decision should be directed to the undersigned at (703) 306-3475.

This application is being forwarded to Technology Center Art Unit 2661 for examination in due course.

Marianne E. Morgan

Marianne E. Morgan
Petitions Examiner
Office of Petitions
Office of the Deputy Commissioner
for Patent Examination Policy

ATTACHMENT: Notice Regarding Rescission of Nonpublication Request

BEST AVAILABLE COPY

UNITED STATES PATENT AND TRADEMARK OFFICE

Commissioner for Patents
United States Patent and Trademark Office
P.O. Box 1450
Alexandria, VA 22313-1450
www.uspto.gov

OPPENHEIMER WOLFF & DONNELLY, LLP (ACCENTURE)
PLAZA VII, SUITE 3300
45 SOUTH SEVENTH STREET
MINNEAPOLIS MN 55402-1609

COPY MAILED

JAN 25 2006

OFFICE OF PETITIONS

In re Application of :
Allen, et al. :
Application No. 10/619,917 : DECISION ON PETITION UNDER
Application Filing Date: July 15, 2003 : 37 CFR 1.137(f)
Attorney Docket No. 60021-378501

This is a decision on the petition under 37 CFR 1.137(f), filed November 7, 2005, to revive the instant non-provisional application.

The petition under 37 CFR 1.137(f) is granted.

This application became abandoned pursuant to 35 U.S.C. § 122(b)(2)(B(iii) for failure to timely notify the Office of the filing of an application in a foreign country.

A petition under 37 CFR 1.137(f) must be accompanied by: (1) the reply which is met by the notification of such filing in a foreign country or under a multinational treaty[1]; (2) the petition fee as set forth in 37 CFR 1.17(m), and (3) a statement that the entire delay in filing the required reply from the due date of the reply until the filing of a grantable petition was unintentional. The Commissioner may require additional information where there is a question whether the delay was unintentional.

The instant petition is found in compliance with 37 CFR 1.137(f).

Accordingly, the failure to timely notify the Office of a foreign filing within 45 days as provided by 35 U.S.C. § 122(b)(2)(B)(iii) is accepted as having been unintentionally delayed.

The application file is being directed to Office of Initial Patent Examination for further processing.

Further inquiries regarding this decision may be directed to the undersigned at (571) 272-3222.

Kenya A. McLaughlin

Kenya A. McLaughlin
Petitions Attorney
Office of Petitions

Enclosure: "Communication Regarding Rescission of Non-Publication Request and/or Notice of Foreign Filing"
Corrected Filing Receipt

[1] The filing of a petition under this section will not relieve applicant of his obligation to reply to any outstanding Office action.

BEST AVAILABLE COPY Ex. Zarneke

SPE RESPONSE FOR CERTIFICATE OF CORRECTION 10/619,918

Paper No.: _____

DATE : 2/27/06

TO SPE OF : ART UNIT 2891

SUBJECT : Request for Certificate of Correction on Patent No.: 6890801

A response is requested with respect to the accompanying request for a certificate of correction.

Please complete this form and return with file, within 7 days to:
Palm location **7580, Certificates of Correction Branch – South Tower – 9A22**
If response is for an IFW, **return to employee (named below) via PUBSCofC Team in MADRAS.**
With respect to the change(s) requested, correcting Office and/or Applicant's errors, should the patent read as shown in the certificate of correction (COCIN)? No new matter should be introduced, nor should the scope or meaning of the claims be changed.

Lamonte M. Newsome

Thank You For Your Assistance

Certificates of Correction Branch
Tel. No. 703-305-8309

The request for issuing the above-identified correction(s) is hereby:
Note your decision on the appropriate box.

- ☒ **Approved** — All changes apply.
- ☐ **Approved in Part** — Specify below which changes **do not** apply.
- ☐ **Denied** — State the reasons for denial below.

Comments: all changes are approved

R. WILLIAM BAUMGARTNER
SUPERVISORY PATENT EXAMINER
TECHNOLOGY CENTER 2800

[illegible] BAUMGARTNER
[illegible] EXAMINER
[illegible] 2800

SPE

2891
Art Unit

10/619918

Cgl

PATENT

OIPE IAP85 JAN 30 2006 PATENT & TRADEMARK OFFICE

IN THE UNITED STATES PATENT AND TRADEMARK OFFICE

Inventor(s): Warren M. Farnworth

Patent No.: 6,890,801 B2

Issued: May 10, 2005

For: STEREOLITHOGRAPHIC METHODS FOR FABRICATING HERMETIC SEMICONDUCTOR DEVICE PACKAGES AND SEMICONDUCTOR DEVICES INCLUDING STEREOLITHOGRAPHICALLY FABRICATED HERMETIC PACKAGES

Attorney Docket No.: 2269-4212.6US

CERTIFICATE OF MAILING

I hereby certify that this correspondence along with any attachments referred to or identified as being attached or enclosed is being deposited with the United States Postal Service as First Class Mail on the date of deposit shown below with sufficient postage and in an envelope addressed to the Commissioner for Patents, P.O. Box 1450, Alexandria, VA 22313-1450.

January 26, 2006
Date

Signature

Erika Gandre
Name (Type/Print)

Certificate
FEB 02 2006
of Correction

REQUEST FOR CERTIFICATE OF CORRECTION OF PATENT FOR APPLICANT'S MISTAKES (37 C.F.R. § 1.323) AND PATENT OFFICE MISTAKES (37 C.F.R. § 1.322)

Attn.: Certificate of Corrections Branch
Commissioner for Patents
P.O. Box 1450
Alexandria, VA 22313-1450

Sir:

It is noted that a combination of Applicant and Patent Office errors appear in this patent of a typographical nature or character and correction thereof does not involve such changes in the patent as would constitute new matter or would require reexamination. A certificate of correction in the form attached hereto is requested.

02/01/2006 HGUTEMA1 00000010 6890801
01 FC:1811 100.00 OP

OK to enter
3/8/06

FEB 03 2006

UNITED STATES PATENT AND TRADEMARK OFFICE

Commissioner for Patents
United States Patent and Trademark Office
P.O. Box 1450
Alexandria, VA 22313-1450
www.uspto.gov

MAILED

APR 08 2010

OFFICE OF PETITIONS

THE LAW OFFICES OF BRADLEY J. BEREZNAK
800 WEST EL CAMINO REAL
SUITE 180
MOUNTAIN VIEW CA 94040

In re Application of	:	
Stephen G. Perlman	:	DECISION ON PETITION
Application No. 10/619,919	:	
Filed: July 15, 2003	:	
Attorney Docket No. **08258.P008C**	:	

This is a decision on the petition filed February 2, 2010 under 37 C.F.R. § 1.137(b).

The petition is **GRANTED**.

In response to a Notice of Allowance mailed October 5, 2009, the issue fee transmittal was timely submitted on October 22, 2009, however the issue fee transmittal was not accompanied by a check for the fees and neither did it contain an authorization to charge the issue fee to a deposit account or credit card and thus the application became abandoned January 6, 2010. Accordingly a Notice of Abandonment was mailed January 27, 2010.

All other requirements under 37 CFR 1.137(b) having been met, this matter is being referred to the Publishing Division.

Telephone inquiries concerning this matter may be directed to the undersigned Petitions Attorney at (571) 272-3212.

Patricia Faison-Ball

Patricia Faison-Ball
Senior Petitions Attorney
Office of Petitions

UNITED STATES PATENT AND TRADEMARK OFFICE

Commissioner for Patents
United States Patent and Trademark Office
P.O. Box 1450
Alexandria, VA 22313-1450
www.uspto.gov

AIR PRODUCTS AND CHEMICALS, INC.
PATENT DEPARTMENT
7201 HAMILTON BOULEVARD
ALLENTOWN, PA 18195-1501

COPY MAILED

JUL 31 2007

OFFICE OF PETITIONS

In re Application of	:
Bing Ji et al	:
Application No. 10/619,922	: DECISION GRANTING PETITION
Filed: July 15, 2003	: UNDER 37 CFR 1.313(c)(2)
Attorney Docket No. 06437 USA	:

This is a decision on the petition, filed July 27, 2007, under 37 CFR 1.313(c)(2) to withdraw the above-identified application from issue after payment of the issue fee.

The petition is **GRANTED**.

The above-identified application is withdrawn from issue for consideration of a submission under 37 CFR 1.114 (request for continued examination). See 37 CFR 1.313(c)(2).

Petitioner is advised that the issue fee paid on June 7, 2007 in the above-identified application cannot be refunded. If, however, the above-identified application is again allowed, petitioner may request that it be applied towards the issue fee required by the new Notice of Allowance.[1]

Telephone inquiries should be directed to the undersigned at (571) 272-3218.

This matter is being referred to Technology Center AU 1765 for processing of the request for continued examination under 37 CFR 1.114 and for consideration of the Information Disclosure Statement.

Frances Hicks
Petitions Examiner
Office of Petitions

C:\Documents and Settings\fhicks\My Documents\470\july10\619922.wpd

---

[1] *The request to apply the issue fee to the new Notice may be satisfied by completing and returning the new Part B – Fee(s) Transmittal Form (along with any balance due at the time of submission). Petitioner is advised that the Issue Fee Transmittal Form must be completed and timely submitted to avoid abandonment.*

UNITED STATES PATENT AND TRADEMARK OFFICE

UNITED STATES DEPARTMENT OF COMMERCE
United States Patent and Trademark Office
Address: COMMISSIONER FOR PATENTS
P.O. Box 1450
Alexandria, Virginia 22313-1450
www.uspto.gov

Cooley Godward Kronish LLP
ATTN: Patent Group
777 6th Street, N.W., Suite 1100
Washington, DC 20001

Mail Date: 04/20/2010

Applicant	: Gopi Venkatesh	: DECISION ON REQUEST FOR
Patent Number	: 7632521	: RECALCULATION of PATENT
Issue Date	: 12/15/2009	: TERM ADJUSTMENT IN VIEW
Appliction No	: 10/619,924	: OF WYETH AND NOTICE OF INTENT TO
Filed	: 07/15/2003	: ISSUE CERTIFICATE OF CORRECTION
		:

The Request for Recalculation is **GRANTED** to the extent indicated.

The patent term adjustment has been determined to be **737** days. The USPTO will *sua sponte* issue a certificate of correction reflecting the amount of PTA days determined by the recalculation.

Prior to the issuance of the certificate of correction, the USPTO will afford patentee an opportunity to be heard and request reconsideration. Accordingly, patentee has **one month or thirty (30) days**, whichever is longer, to file a request for reconsideration of this patent term adjustment calculation. See 35 U.S.C. 154(b)(3)(B)(ii) and 37 CFR 1.322(a)(4). No extensions of time will be granted under 37 CFR 1.136.

Patentee should use document code PET.OP if electronically filing a request for reconsideration of this patent term adjustment calculation. The patentee must also include the information required by 37 CFR 1.705(b)(2) and the fee required by 37 CFR 1.18(e). If patentee does not file a timely request for reconsideration of this patent term adjustment calculation including the information required by 37 CFR 1.705(b)(2) and the fee required by 37 CFR 1.18(e), the USPTO will issue a certificate of correction reflecting the PTA determination noted above.

Patentee should be aware that in order to preserve the right to review in the United States District Court for the District of Columbia of the USPTO patent term adjustment determination, patentee must ensure that he or she also take the steps required under 35 U.S.C. 154(b)(4)(A) in a timely manner. Nothing in the request for recalculation should be construed as providing an alternative time frame for commencing a civil action under 35 U.S.C. 154(b)(4)(A).

Any questions concerning this decision should be directed to the Office of Patent Legal Administration at 571-272-7702.

UNITED STATES PATENT AND TRADEMARK OFFICE

UNITED STATES DEPARTMENT OF COMMERCE
United States Patent and Trademark Office
Address: COMMISSIONER FOR PATENTS
P.O. Box 1450
Alexandria, Virginia 22313-1450
www.uspto.gov

Cooley LLP
ATTN: Patent Group
777 6th Street, N.W., Suite 1100
Washington, DC 20001

Mail Date: 05/17/2010

Applicant : Gopi Venkatesh
Patent Number : 7632521
Issue Date : 12/15/2009
Application No : 10/619,924
Filed : 07/15/2003

: NOTICE CONCERNING IMPROPER
: CALCULATION OF PATENT TERM
: ADJUSTMENT BASED UPON USPTO
: IMPROPERLY MEASURING REDUCTION
: PERIOD UNDER 37 CFR 1.704(c)(10).

The United States Patent and Trademark Office (USPTO) discovered that in processing the recent recalculation decisions mailed in response to patentee's filed Request for Recalculation of Patent Term Adjustment in view of Wyeth, the USPTO improperly measured the reduction period for reductions under 37 CFR 1.704(c)(10). Pursuant to 37 CFR 1.704(c)(10), patentee's reduction begins on the date of filing the amendment under 37 CFR 1.312 ("1.312 amendment") or other related paper and ends on the date that the Office mails a response to the filing of the 1.312 amendment or other paper. It has been discovered that during the recalculation, the calculation failed to the limit the reduction to the mail date of the response to the 1.312 amendment or other paper. Accordingly, patentee's reductions were greater than warranted.

This notice **VACATES** the previous GRANTED request for recalculation and provides patentee with a revised GRANTED recalculation.

The patent term adjustment has been determined to be **776** days. The USPTO will *sua sponte* issue a certificate of correction reflecting the amount of patent term adjustment (PTA) days determined by the recalculation.

Prior to the issuance of the certificate of correction, the USPTO will afford patentee an opportunity to be heard and request reconsideration. Accordingly, patentee has **one month or thirty (30) days** from the mail date of this notice, whichever is longer, to file a request for reconsideration of this PTA calculation. See 35 U.S.C. § 154(b)(3)(B)(ii) and 37 CFR 1.322(a)(4).

Patentee should use document code PET.OP if electronically filing a request for reconsideration of this PTA calculation. The patentee must also include the information required by 37 CFR 1.705(b)(2), and the fee required by 37 CFR 1.18(e). If patentee does not file a timely request for reconsideration of this PTA calculation, including the information required by 37 CFR 1.705(b)(2) and the fee required by 37 CFR 1.18(e), the USPTO will issue a certificate of correction reflecting the PTA determination noted above.

Patentee should be aware that in order to preserve the right of review of the USPTO's PTA determination in the United States District Court for the District of Columbia, patentee must ensure that the steps required under 35 U.S.C. § 154 (b)(4) are taken in a timely manner. Nothing in the request for recalculation should be construed as providing an alternative time frame for commencing a civil action under 35 U.S.C. § 154(b)(4).

UNITED STATES PATENT AND TRADEMARK OFFICE

Commissioner for Patents
United States Patent and Trademark Office
P.O. Box 1450
Alexandria, VA 22313-1450
www.uspto.gov

COPY MAILED

APR 07 2008

OFFICE OF PETITIONS

DANIEL H. GOLUB
1701 MARKET STREET
PHILADELPHIA PA 19103

In re Application of	:	
Adrianus Johannes Heinen	:	
Application No. 10/619,926	:	DECISION GRANTING PETITION
Filed: July 15, 2003	:	UNDER 37 CFR 1.313(c)(2)
Attorney Docket No. USP169781A	:	

This is a decision on the petition under 37 CFR 1.313(c)(2), filed April 7, 2008, to withdraw the above-identified application from issue after payment of the issue fee.

The petition is **GRANTED**.

The above-identified application is withdrawn from issue for consideration of a submission under 37 CFR 1.114 (request for continued examination). *See* 37 CFR 1.313(c)(2).

Petitioner is advised that the issue fee paid on February 1, 2008 cannot be refunded. If, however, this application is again allowed, petitioner may request that it be applied towards the issue fee required by the new Notice of Allowance.[1]

The petition is not signed by an attorney of record. Nevertheless, in accordance with 37 CFR 1.34, the signature of Mr. Robert J. Goodell appearing on the correspondence shall constitute a representation to the United States Patent and Trademark Office that he is authorized to represent the particular party on whose behalf he acts. If Mr. Goodell desires to receive future correspondence regarding this file, the appropriate power of attorney documents must be submitted. A courtesy copy of this decision is being mailed to petitioner herein. However, until otherwise instructed, all future correspondence regarding this application file will be directed solely to the above-noted correspondence address of record.

---

[1] *The request to apply the issue fee to the new Notice may be satisfied by completing and returning the new Part B – Fee(s) Transmittal Form (along with any balance due at the time of submission). Petitioner is advised that the Issue Fee Transmittal Form* ***must*** *be completed and timely submitted to avoid abandonment of the application.*

Telephone inquiries should be directed to the undersigned at (571) 272-3208.

This application is being referred to Technology Center AU 3618 for processing of the request for continued examination under 37 CFR 1.114 and for consideration of the concurrently filed IDS.

Karen Creasy

Karen Creasy
Petitions Examiner
Office of Petitions

cc:

MORGAN, LEWIS & BOCKIUS LLP
1111 PENNSYLVANIA AVENUE, NW
WASHINGTON DC 20004

PTO/SB/66 (03-09)
Approved for use through 03/31/2012. OMB 0651-0016
U.S. Patent and Trademark Office: U.S. DEPARTMENT OF COMMERCE
Under the Paperwork Reduction Act of 1995, no persons are required to respond to a collection of information unless it displays valid OMB control number.

PETITION TO ACCEPT UNINTENTIONALLY DELAYED PAYMENT OF MAINTENANCE FEE IN AN EXPIRED PATENT (37 CFR 1.378(c))

Patent Number	Issue Date (YYYY-MM-DD)	Application Number	Filing Date (YYYY-MM-DD)	Docket Number (if applicable)
7,007,114	2006-02-28	10619954	2003-07-15	MP0796

CAUTION: Maintenance fee (and surcharge, if any) payment must correctly identify: (1) the patent number and (2) the application number of the actual U.S. application leading to issuance of that patent to ensure the fee(s) is/are associated with the correct patent. 37 CFR 1.366(c) and (d).

SMALL ENTITY
☐ Patentee claims, or has previously claimed, small entity status. See 37 CFR 1.27.

LOSS OF ENTITLEMENT TO SMALL ENTITY STATUS
☐ Patentee is no longer entitled to small entity status. See 37 CFR 1.27(g)

NOT Small Entity		Small Entity	
Fee	Code	Fee	Code
◉ 3 ½ year	(1551)	○ 3 ½ year	(2551)
○ 7 ½ year	(1552)	○ 7 ½ year	(2552)
○ 11 ½ year	(1553)	○ 11 ½ year	(2553)

SURCHARGE
The surcharge required by 37 CFR 1.20(i)(2) (Fee Code 1558) must be paid as a condition of accepting unintentionally delayed payment of the maintenance fee.

MAINTENANCE FEE (37 CFR 1.20(e)-(g))
The appropriate maintenance fee must be submitted with this petition.

STATEMENT
THE UNDERSIGNED CERTIFIES THAT THE DELAY IN PAYMENT OF THE MAINTENANCE FEE TO THIS PATENT WAS UNINTENTIONAL

PETITIONER(S) REQUEST THAT THE DELAYED PAYMENT OF THE MAINTENANCE FEE BE ACCEPTED AND THE PATENT REINSTATED

THIS PORTION MUST BE COMPLETED BY THE SIGNATORY OR SIGNATORIES

37 CFR 1.378(d) states: "Any petition under this section must be signed by an attorney or agent registered to practice before the Patent and Trademark Office, or by the patentee, the assignee, or other party in interest."

I certify, in accordance with 37 CFR 1.4(d)(4) that I am

◉ An attorney or agent registered to practice before the Patent and Trademark Office

○ A sole patentee

○ A joint patentee; I certify that I am authorized to sign this submission on behalf of all the other patentees.

○ A joint patentee; all of whom are signing this e-petition

○ The assignee of record of the entire interest

Patent Practitioner			
A signature of the applicant or representative is required in accordance with 37 CFR 1.33 and 10.18. Please see 37 CFR 1.4(d) for the form of the signature			
Signature	/Michael D. Wiggins/	Date (YYYY-MM-DD)	2010-04-30
Name	Michael D. Wiggins	Registration Number	34754

This collection of information is required by 37 CFR 1.378(c). The information is required to obtain or retain a benefit by the public which is to file (and by the USPTO to process) an application. Confidentiality is governed by 35 U.S.C. 122 and 37 CFR 1.11 and 1.14. This collection is estimated to take 1 hour to complete, including gathering, preparing, and submitting the completed application form to the USPTO. Time will vary depending upon the individual case. Any comments on the amount of time you require to complete this form and/ or suggestions for reducing this burden, should be sent to the Chief Information Officer, U.S. Patent and Trademark Office, U.S. Department of Commerce, P.O. Box 1450, Alexandria, VA 22313-1450. DO NOT SEND FEES OR COMPLETED FORMS TO THIS ADDRESS. **This form can only be used when in conjunction with EFS-Web. If this form is mailed to the USPTO, it may cause delays in reinstating the patent.**

Privacy Act Statement

The Privacy Act of 1974 (P.L. 93-579) requires that you be given certain information in connection with your submission of the attached form related to a patent application or patent. Accordingly, pursuant to the requirements of the Act, please be advised that: (1) the general authority for the collection of this information is 35 U.S.C. 2(b)(2); (2) furnishing of the information solicited is voluntary; and (3) the principal purpose for which the information is used by the U.S. Patent and Trademark Office is to process and/or examine your submission related to a patent application or patent. If you do not furnish the requested information, the U.S. Patent and Trademark Office may not be able to process and/or examine your submission, which may result in termination of proceedings or abandonment of the application or expiration of the patent.

The information provided by you in this form will be subject to the following routine uses:

1. The information on this form will be treated confidentially to the extent allowed under the Freedom of Information Act (5 U.S.C. 552) and the Privacy Act (5 U.S.C. 552a). Records from this system of records may be disclosed to the Department of Justice to determine whether the Freedom of Information Act requires disclosure of these records.

2. A record from this system of records may be disclosed, as a routine use, in the course of presenting evidence to a court, magistrate, or administrative tribunal, including disclosures to opposing counsel in the course of settlement negotiations.

3. A record in this system of records may be disclosed, as a routine use, to a Member of Congress submitting a request involving an individual, to whom the record pertains, when the individual has requested assistance from the Member with respect to the subject matter of the record.

4. A record in this system of records may be disclosed, as a routine use, to a contractor of the Agency having need for the information in order to perform a contract. Recipients of information shall be required to comply with the requirements of the Privacy Act of 1974, as amended, pursuant to 5 U.S.C. 552a(m).

5. A record related to an International Application filed under the Patent Cooperation Treaty in this system of records may be disclosed, as a routine use, to the International Bureau of the World Intellectual Property Organization, pursuant to the Patent Cooperation Treaty.

6. A record in this system of records may be disclosed, as a routine use, to another federal agency for purposes of National Security review (35 U.S.C. 181) and for review pursuant to the Atomic Energy Act (42 U.S.C. 218(c)).

7. A record from this system of records may be disclosed, as a routine use, to the Administrator, General Services, or his/her designee, during an inspection of records conducted by GSA as part of that agency's responsibility to recommend improvements in records management practices and programs, under authority of 44 U.S.C. 2904 and 2906. Such disclosure shall be made in accordance with the GSA regulations governing inspection of records for this purpose, and any other relevant (i.e., GSA or Commerce) directive. Such disclosure shall not be used to make determinations about individuals.

8. A record from this system of records may be disclosed, as a routine use, to the public after either publication of the application pursuant to 35 U.S.C. 122(b) or issuance of a patent pursuant to 35 U.S.C. 151. Further, a record may be disclosed, subject to the limitations of 37 CFR 1.14, as a routine use, to the public if the record was filed in an application which became abandoned or in which the proceedings were terminated and which application is referenced by either a published application, an application open to public inspections or an issued patent.

9. A record from this system of records may be disclosed, as a routine use, to a Federal, State, or local law enforcement agency, if the USPTO becomes aware of a violation or potential violation of law or regulation.

UNITED STATES PATENT AND TRADEMARK OFFICE

Commissioner for Patents
United States Patent and Trademark Office
P.O. Box 1450
Alexandria, VA 22313-1450
www.uspto.gov

In re Patent No. 7007114
Issue Date: February 28,2006
Application No. 10619954
Filed: July 15,2003
Attorney Docket No. MP0796

:
:DECISION GRANTING PETITION
:UNDER 37 CFR 1.378(c)
:

This is a decision on the electronic petition, filed April 30,2010 ,under 37 CFR 1.378(c) to accept the unintentionally delayed payment of the 3.5 year maintenance fee for the above-identified patent.

The petition is **GRANTED**.

The maintenance fee is accepted, and the above-identified patent reinstated as of April 30,2010 .
This decision also constitutes notice that the fee has been accepted. An electronic copy of the petition and this decision has been created as an entry in the Image File Wrapper. Nevertheless, petitioner should print and retain an independent copy.

Telephone inquiries related to this electronic decision should be directed to the Electronic Business Center at 1-866-217-9197.

UNITED STATES PATENT AND TRADEMARK OFFICE

Commissioner for Patents
United States Patent and Trademark Office
P.O. Box 1450
Alexandria, VA 22313-1450
www.uspto.gov

LAW OFFICES OF MIKIO ISHIMARU
333 W. EL CAMINO REAL
SUITE 330
SUNNYVALE, CA 94087

COPY MAILED

JAN 28 2009

OFFICE OF PETITIONS

In re Patent No. 6,845,322 :
Issue Date: January 18, 2005 :
Application No. 10/619,974 :
Filed: July 15, 2003 :
Patentee(s): Yi-Chung Chao, et. al. :

NOTICE

This is a Notice regarding your request for acceptance of a fee deficiency submission under 37 CFR 1.28, filed on October 28, 2008.

The Office no longer investigates or rejects original or reissue applications under 37 CFR 1.56. 1098 Off. Gaz. Pat. Office 502 (January 3, 1989). Therefore, nothing in this Notice is intended to imply that an investigation was done.

Your fee deficiency submission under 37 CFR 1.28 is hereby **ACCEPTED**. Therefore, status as a small entity has been removed and all future fees paid must be submitted at the large entity rate.

Inquiries related to this communication should be directed to the undersigned at (571) 272-3226.

Andrea Smith
Petitions Examiner
Office of Petitions

UNITED STATES PATENT AND TRADEMARK OFFICE

Commissioner for Patents
United States Patent and Trademark Office
P.O. Box 1450
Alexandria, VA 22313-1450
www.uspto.gov

LEXMARK INTERNATIONAL, INC.
INTELLECTUAL PROPERTY LAW DEPARTMENT
740 WEST NEW CIRCLE ROAD
BLDG. 082-1
LEXINGTON, KY 40550-0999

COPY MAILED

AUG 0 3 2006

OFFICE OF PETITIONS

ON PETITION

In re Application of :
Bell, et al. :
Application No. 10/619,975 :
Filed: July 15, 2003 :
Attorney Docket No. 2001-0699.07 :

This is a decision on the petition under 37 CFR 1.181, filed August 15, 2005, to withdraw the holding of abandonment. The petition was recently forwarded to this office for consideration.

This application became abandoned for failure to timely file a proper reply to the final Office action mailed September 15, 2004. Accordingly, this application became abandoned on December 16, 2004. A Notice of Abandonment was mailed July 12, 2005.[1]

Petitioner asserts the Office action was not received. The showing required to establish non-receipt of an Office communication must include a statement from the practitioner stating that the Office communication was not received by the practitioner and attesting to the fact that a search of the file jacket and docket records indicates that the Office communication was not received. A copy of the docket record where the non-received Office communication would have been entered had it been received and docketed must be attached to and referenced in practitioner's statement. See Withdrawing the Holding of Abandonment When Office Actions Are Not Received; Notice 1156 Off. Gaz. Pat. Office 53 (November 16, 1993).

The required statements and docket records have been submitted and considered.

The petition is granted. In view thereof, the holding of abandonment is withdrawn. A new Office action will be mailed and the period for reply will be re-started.

Technology Center AU 2853 has been advised of this decision. The application file is, thereby, forwarded to the Technology Center's support staff for re-mailing of the September 15, 2004

[1] It is noted that a final Office action dated September 15, 2004 is not found in the application file at the time of this review. However, it is noted that USPTO PALM database records indicate a final Office action was prepared on September 13, 2004 and mailed on September 15, 2004.

Office action. The period for response will be set to run from the mailing date of the new Office action.

Telephone inquiries concerning this matter may be directed to the undersigned at (571) 272-3228.

Edward J. Tannouse
Petitions Attorney
Office of Petitions
Office of the Deputy Commissioner
for Patent Examination Policy

UNITED STATES PATENT AND TRADEMARK OFFICE

COMMISSIONER FOR PATENTS
UNITED STATES PATENT AND TRADEMARK OFFICE
P.O. BOX 1450
ALEXANDRIA, VA 22313-1450
www.uspto.gov

LOUIS PAUL HERZBERG
3 CLOVERDALE LANE
MONSEY, NY 10952

COPY MAILED
SEP 07 2005
OFFICE OF PETITIONS

In re Application of :
Giora Biran, et al. :
Application No. 10/619,989 : ON PETITION
Filed: July 15, 2003 :
Attorney Docket No.: IL920000078US1 :
:

This is a decision on the petition, filed September 6, 2005, under 37 CFR 1.313(c)(2) to withdraw the above-identified application from issue after payment of the issue fee.

The petition is **GRANTED**.

The above-identified application is withdrawn from issue for consideration of a submission under 37 CFR 1.114 (request for continued examination). See 37 CFR 1.313(c)(2).

Petitioner is advised that the issue fee paid on June 29, 2005, in the above-identified application, cannot be refunded. If, however, the above-identified application is again allowed, petitioner may request that it be applied towards the issue fee required by the new Notice of Allowance. [1]

Telephone inquiries relating to this decision should be directed to the undersigned at (571) 272-3204.

The application is being referred to Technology Center AU 2182 for further processing of the request for continued examination under 37 CFR 1.114.

Sherry D. Brinkley
Petitions Examiner
Office of Petitions

[1]The request to apply the issue fee to the new Notice may be satisfied by completing and returning the new Issue Fee Transmittal Form PTOL-85(b), which includes the following language thereon: "Commissioner for Patents is requested to apply the Issue Fee and Publication Fee (if any) or re-apply any previously paid issue fee to the application identified above." Petitioner is advised that, whether a fee is indicated as being due or not, the Issue Fee Transmittal Form **must** be completed and timely submitted to avoid abandonment. Note the language in bold text on the first page of the Notice of Allowance and Fee(s) Due (PTOL-85).

UNITED STATES PATENT AND TRADEMARK OFFICE

COMMISSIONER FOR PATENTS
UNITED STATES PATENT AND TRADEMARK OFFICE
P.O. BOX 1450
ALEXANDRIA, VA 22313-1450
www.uspto.gov

LOUIS PAUL HERZBERG
3 CLOVERDALE LANE
MONSEY, NY 10952

COPY MAILED
APR 2 0 2006
OFFICE OF PETITIONS

In re Application of	:	
Giora Biran, et. al.	:	
Application No. 10/619,989	:	DECISION ON PETITION
Filed: July 15, 2003	:	UNDER 37 CFR 1.78(a)(3)
Attorney Docket No. IL920000078S1	:	

This is a decision on the petition under 37 CFR 1.78(a)(3), filed December 27, 2005, to accept an unintentionally delayed claim under 35 U.S.C. §§ 120 and 365(c) for the benefit of priority to prior-filed PCT Application No. PCT/IB01/00121, filed January 31, 2001, set forth in the amendment submitted concurrently with the instant petition.

The petition is **GRANTED.**

A petition for acceptance of a claim for late priority under 37 CFR 1.78(a)(3) is only applicable to those applications filed on or after November 29, 2000. Further, the petition is appropriate only after the expiration of the period specified in 37 CFR 1.78(a)(2)(ii). In addition, the petition under 37 CFR 1.78(a)(3) must be accompanied by:

(1) the reference required by 35 U.S.C. § 120 and 37 CFR 1.78(a)(2)(i) of the prior-filed application, unless previously submitted;

(2) the surcharge set forth in § 1.17(t); and

(3) a statement that the entire delay between the date the claim was due under 37 CFR 1.78(a)(2)(ii) and the date the claim was filed was unintentional. The Commissioner may require additional information where there is a question whether the delay was unintentional.

All the above requirements having been satisfied, the late claim for priority under 35 U.S.C. §§ 120 and 365(c) is accepted as being unintentionally delayed.

The granting of the petition to accept the delayed benefit claim to the prior-filed application under 37 CFR 1.78(a)(3) should not be construed as meaning that the application is entitled to the benefit of the prior-filed application. In order for the application to be entitled to the benefit of the prior-filed application, all other requirements under 35 U.S.C. §§ 120 and 365(c) and 37 CFR 1.78(a)(1) and (a)(2) must be met. Similarly, the fact that the corrected Filing Receipt accompanying this decision on petition includes the prior-filed application should not be construed as meaning that applicant is entitled to the claim for benefit of priority to the prior-filed application noted thereon. Accordingly, the examiner will, in due course, consider this benefit claim and determine whether the application is entitled to the benefit of the earlier filing date.

A corrected Filing Receipt, which includes the priority claim to the prior-filed application, accompanies this decision on petition.

This application is being forwarded to the examiner of Technology Center Art Unit 2182 for appropriate action on the amendment filed December 27, 2005, including consideration of applicant's entitlement to claim benefit of priority under 35 U.S.C. §§ 120 and 365(c) to the above-noted, prior-filed PCT application.

Any inquiries concerning this decision may be directed to Andrea Smith at (571) 272-3226. All other inquiries concerning either the examination procedures or status of the application should be directed to the Technology Center.

Frances Hicks
Petitions Examiner
Office of Petitions

ATTACHMENT: Corrected Filing Receipt

UNITED STATES PATENT AND TRADEMARK OFFICE

UNITED STATES DEPARTMENT OF COMMERCE
United States Patent and Trademark Office
Address: COMMISSIONER FOR PATENTS
P.O. Box 1450
Alexandria, Virginia 22313-1450
www.uspto.gov

APPL NO.	FILING OR 371 (c) DATE	ART UNIT	FIL FEE REC'D	ATTY.DOCKET NO	DRAWINGS	TOT CLMS	IND CLMS
10/619,989	07/15/2003	2182	2380	IL920000078US1	15	20	2

CONFIRMATION NO. 8807

CORRECTED FILING RECEIPT

OC000000018573327

54856
LOUIS PAUL HERZBERG
3 CLOVERDALE LANE
MONSEY, NY 10952

Date Mailed: 04/19/2006

Receipt is acknowledged of this regular Patent Application. It will be considered in its order and you will be notified as to the results of the examination. Be sure to provide the U.S. APPLICATION NUMBER, FILING DATE, NAME OF APPLICANT, and TITLE OF INVENTION when inquiring about this application. Fees transmitted by check or draft are subject to collection. Please verify the accuracy of the data presented on this receipt. **If an error is noted on this Filing Receipt, please mail to the Commissioner for Patents P.O. Box 1450 Alexandria Va 22313-1450. Please provide a copy of this Filing Receipt with the changes noted thereon. If you received a "Notice to File Missing Parts" for this application, please submit any corrections to this Filing Receipt with your reply to the Notice. When the USPTO processes the reply to the Notice, the USPTO will generate another Filing Receipt incorporating the requested corrections (if appropriate).**

Applicant(s)

Giora Biran, Zichron Ya' akov, ISRAEL;
Georgy Machulsky, Nahariya, ISRAEL;
Claudiu Schiller, Haifa, ISRAEL;
Tal Sostheim, Kiryat Tivon, ISRAEL;

Assignment For Published Patent Application

International Business Machines Corporation, Armonk, NY

Power of Attorney:

Joseph Redmond Jr--18753
Robert Trepp--25933
John Hoel--26279
Christopher Hughes--26914
Stephen Kaufman--29551
Douglas Cameron--31596
Manny Schecter--31722
Daniel Morris--32053
Richard Ludwin--33010
Louis Percello--33206

Domestic Priority data as claimed by applicant

This application is a CON of PCT/IB01/00121 01/31/2001

Foreign Applications

If Required, Foreign Filing License Granted: 10/27/2003

The country code and number of your priority application, to be used for filing abroad under the Paris Convention, is US10/619,989

Projected Publication Date: Not Applicable

Non-Publication Request: No

Early Publication Request: No

Title

TRANSFERRING INTERRUPTS FROM A PERIPHERAL DEVICE TO A HOST COMPUTER SYSTEM

Preliminary Class

710

PROTECTING YOUR INVENTION OUTSIDE THE UNITED STATES

Since the rights granted by a U.S. patent extend only throughout the territory of the United States and have no effect in a foreign country, an inventor who wishes patent protection in another country must apply for a patent in a specific country or in regional patent offices. Applicants may wish to consider the filing of an international application under the Patent Cooperation Treaty (PCT). An international (PCT) application generally has the same effect as a regular national patent application in each PCT-member country. The PCT process **simplifies** the filing of patent applications on the same invention in member countries, but **does not result** in a grant of "an international patent" and does not eliminate the need of applicants to file additional documents and fees in countries where patent protection is desired.

Almost every country has its own patent law, and a person desiring a patent in a particular country must make an application for patent in that country in accordance with its particular laws. Since the laws of many countries differ in various respects from the patent law of the United States, applicants are advised to seek guidance from specific foreign countries to ensure that patent rights are not lost prematurely.

Applicants also are advised that in the case of inventions made in the United States, the Director of the USPTO must issue a license before applicants can apply for a patent in a foreign country. The filing of a U.S. patent application serves as a request for a foreign filing license. The application's filing receipt contains further information and guidance as to the status of applicant's license for foreign filing.

Applicants may wish to consult the USPTO booklet, "General Information Concerning Patents" (specifically, the section entitled "Treaties and Foreign Patents") for more information on timeframes and deadlines for filing foreign patent applications. The guide is available either by contacting the USPTO Contact Center at 800-786-9199, or it can be viewed on the USPTO website at http://www.uspto.gov/web/offices/pac/doc/general/index.html.

For information on preventing theft of your intellectual property (patents, trademarks and copyrights), you may wish to consult the U.S. Government website, http://www.stopfakes.gov. Part of a Department of Commerce initiative, this website includes self-help "toolkits" giving innovators guidance on how to protect intellectual property in specific countries such as China, Korea and Mexico. For questions regarding patent enforcement issues, applicants may call the U.S. Government hotline at 1-866-999-HALT (1-866-999-4158).

LICENSE FOR FOREIGN FILING UNDER
Title 35, United States Code, Section 184
Title 37, Code of Federal Regulations, 5.11 & 5.15

GRANTED

The applicant has been granted a license under 35 U.S.C. 184, if the phrase "IF REQUIRED, FOREIGN FILING LICENSE GRANTED" followed by a date appears on this form. Such licenses are issued in all applications where the conditions for issuance of a license have been met, regardless of whether or not a license may be required as set forth in 37 CFR 5.15. The scope and limitations of this license are set forth in 37 CFR 5.15(a) unless an earlier license has been issued under 37 CFR 5.15(b). The license is subject to revocation upon written notification. The date indicated is the effective date of the license, unless an earlier license of similar scope has been granted under 37 CFR 5.13 or 5.14.

This license is to be retained by the licensee and may be used at any time on or after the effective date thereof unless it is revoked. This license is automatically transferred to any related applications(s) filed under 37 CFR 1.53(d). This license is not retroactive.

The grant of a license does not in any way lessen the responsibility of a licensee for the security of the subject matter as imposed by any Government contract or the provisions of existing laws relating to espionage and the national security or the export of technical data. Licensees should apprise themselves of current regulations especially with respect to certain countries, of other agencies, particularly the Office of Defense Trade Controls, Department of State (with respect to Arms, Munitions and Implements of War (22 CFR 121-128)); the Bureau of Industry and Security, Department of Commerce (15 CFR parts 730-774); the Office of Foreign Assets Control, Department of Treasury (31 CFR Parts 500+) and the Department of Energy.

NOT GRANTED

No license under 35 U.S.C. 184 has been granted at this time, if the phrase "IF REQUIRED, FOREIGN FILING LICENSE GRANTED" DOES NOT appear on this form. Applicant may still petition for a license under 37 CFR 5.12, if a license is desired before the expiration of 6 months from the filing date of the application. If 6 months has lapsed from the filing date of this application and the licensee has not received any indication of a secrecy order under 35 U.S.C. 181, the licensee may foreign file the application pursuant to 37 CFR 5.15(b).

SPE RESPONSE FOR CERTIFICATE OF CORRECTION

Paper No.: _____

DATE : October 3, 2007

TO SPE OF : ART UNIT 1615

SUBJECT : Request for Certificate of Correction for Appl. No .10/620006 patent no.6926905

Please respond to this request for a certificate of correction within 7 days.

Please review the requested changes/corrections as shown in the **COCIN** document(s) in the IFW application image. No new matter should be introduced, nor should the scope or meaning of the claims be changed.

Please complete the response (see below) and forward the completed response to scanning using document code **COCX**.

Magdalene Talley

Certificates of Correction Branch

703-308-9390 ext. 116

Thank You For Your Assistance

The request for issuing the above-identified correction(s) is hereby:

Note your decision on the appropriate box.

- ☒ **Approved** — All changes apply.
- ☐ **Approved in Part** — Specify below which changes **do not** apply.
- ☐ **Denied** — State the reasons for denial below.

Comments: _____

Frederick Thomas — SPE

1612 — Art Unit

IN THE UNITED STATES PATENT AND TRADEMARK OFFICE

Atty. Docket: GRANT=1A

In re Patent of:	)	Conf. No.: 7468
GRANT et al.	)	
Patent No.: 6,926,905	)	Washington, D.C.
Issued: August 9, 2005	)	September 10, 2007
For: LIPOSOMAL BUPIVACAINE COMPOSITIONS AND METHODS OF PREPARATION	)	ATTN: Certificate of Correction Division

REQUEST FOR CERTIFICATE OF CORRECTION UNDER 37 C.F.R. §1.322

Honorable Commissioner for Patents
U.S. Patent and Trademark Office
Randolph Building, Mail Stop Post Issue
401 Dulany Street
Alexandria, VA 22314

OK to enter
9/11/08

Sir:

A Request for Certificate of Correction under Rule 323 was filed in connection with the above-identified patent on June 1, 2006. A copy of this Request is attached along with a postcard received from the USPTO indicating that the Request was received. We have not received an official Certificate of Correction, nor any other response from the PTO regarding this matter. Accordingly, applicant respectfully requests the status of the Request for Certificate of Correction.

Granting of the Request filed June 1, 2006, is earnestly solicited.

Respectfully submitted,

BROWDY AND NEIMARK, P.L.L.C.
Attorneys for Applicant(s)

By
Sheridan Neimark
Registration No. 20,520

:dtb
Telephone No.: (202) 628-5197
Facsimile No.: (202) 737-3528
G:\BN\C\cohn\Grant1A\pto\2007-09-10RequestforStatusofCertCor.doc

COPY

IN THE UNITED STATES PATENT AND TRADEMARK OFFICE

Atty. Docket: GRANT=1A

In re Patent of:	)	Conf. No.: 7468
GRANT et al	)	
Patent No.: 6,926,905	)	Washington, D.C.
Issued: August 9, 2005	)	June 1, 2006
For: LIPOSOMAL BUPIVACAINE COMPOSITIONS AND METHODS OF PREPARATION	)	ATTN: Certificate of Correction Division

REQUEST FOR CERTIFICATE OF CORRECTION UNDER 37 C.F.R. §1.323

Honorable Commissioner for Patents
U.S. Patent and Trademark Office
Randolph Building, Mail Stop Post Issue
401 Dulany Street
Alexandria, VA 22314

Sir:

In checking over the printed copy of the above-identified patent, we have found the following errors that are not the fault of the Patent and Trademark Office. It is respectfully requested that these errors be corrected in accordance with 37 CFR §1.323. The errors to be corrected are listed below.

On page 1, section 54, in the title delete "LIPOSOMAK" and insert --LIPOSOMAL BUPIVACAINE--.

On page 1, section 63, delete "PCT/US99/06959" and insert --PCT/US99/06958--.

Column 1, line 1, delete "LIPOSOMAK" and insert --LIPOSOMAL BUPIVACAINE--.

Column 7, line 15, should read --A method for preparing a liposomal drug having a high--.

Column 8, line 12, should read --and washing the rehydrated liposomes in a hyperosmotic--.

When the changes are considered, it will be clear that the errors are of a typographical or clerical error in nature and/or of minor character, which occurred in good faith. Correction thereof does not involve such changes in the patent as would constitute "new matter" or would require re-examination.

Attached please find PTO Form 2038 authorizing payment in the amount of $100.00 to cover the appropriate fee for corrections under 37 CFR §1.323. If insufficient fees are specifically authorized, please charge same to Deposit Account No. 02-4035.

We are also attaching one copy of the Certificate of Correction form.

Granting of this request is earnestly solicited.

Respectfully submitted,

BROWDY AND NEIMARK, P.L.L.C.
Attorneys for Applicant(s)

By _____
Sheridan Neimark
Registration No. 20,520

:dtb
Telephone No.: (202) 628-5197
Facsimile No.: (202) 737-3528
G:\BN\C\cohn\Grant1A\pto\2006-06-01 323CertCor.doc

PTO/SB/44 (04-05)
Approved for use through 04/30/2007. OMB 0651-0033
U.S. Patent and Trademark Office; U.S. DEPARTMENT OF COMMERCE
Under the Paperwork Reduction Act of 1995, no persons are required to respond to a collection of information unless it displays a valid OMB control number.
(Also Form PTO-1050)

UNITED STATES PATENT AND TRADEMARK OFFICE
CERTIFICATE OF CORRECTION

PATENT NO. : 6,926,905
APPLICATION NO.: 10/620,006
ISSUE DATE : August 9, 2005
INVENTOR(S) : Grant et al.

It is certified that an error appears or errors appear in the above-identified patent and that said Letters Patent is hereby corrected as shown below:

On page 1, section 54, in the title delete "LIPOSOMAK" and insert --LIPOSOMAL BUPIVACAINE--.

On page 1, section 63, delete "PCT/US99/06959" and insert --PCT/US99/06958--.

Column 1, line 1, delete "LIPOSOMAK" and insert --LIPOSOMAL BUPIVACAINE--.

Column 7, line 15, should read --A method for preparing a liposomal drug having a high--.

Column 8, line 12, should read --and washing the rehydrated liposomes in a hyperosmotic--.

MAILING ADDRESS OF SENDER (Please do not use customer number below):
BROWDY AND NEIMARK
624 Ninth Street, NW
Suite 300
Washington, DC 20001-5303

This collection of information is required by 37 CFR 1.322, 1.323, and 1.324. The information is required to obtain or retain a benefit by the public which is to file (and by the USPTO to process) an application. Confidentiality is governed by 35 U.S.C. 122 and 37 CFR 1.14. This collection is estimated to take 1.0 hour to complete, including gathering, preparing, and submitting the completed application form to the USPTO. Time will vary depending upon the individual case. Any comments on the amount of time you require to complete this form and/or suggestions for reducing this burden, should be sent to the Chief Information Officer, U.S. Patent and Trademark Office, U.S. Department of Commerce, P.O. Box 1450, Alexandria, VA 22313-1450. DO NOT SEND FEES OR COMPLETED FORMS TO THIS ADDRESS. **SEND TO: Attention Certificate of Corrections Branch, Commissioner for Patents, P.O. Box 1450, Alexandria, VA 22313-1450.**

If you need assistance in completing the form, call 1-800-PTO-9199 and select option 2.

UNITED STATES PATENT AND TRADEMARK OFFICE

UNITED STATES DEPARTMENT OF COMMERCE
United States Patent and Trademark Office
Address: COMMISSIONER FOR PATENTS
P.O. Box 1450
Alexandria, Virginia 22313-1450
www.uspto.gov

CAMPBELL STEPHENSON LLP
11401 CENTURY OAKS TERRACE
BLDG. H, SUITE 250
AUSTIN, TX 78758

Mail Date: 06/25/2010

Applicant	: Jin Huai	: DECISION ON REQUEST FOR
Patent Number	: 7639665	: RECALCULATION of PATENT
Issue Date	: 12/29/2009	: TERM ADJUSTMENT IN VIEW
Application No	: 10/620,021	: OF WYETH AND NOTICE OF INTENT TO
Filed	: 07/15/2003	: ISSUE CERTIFICATE OF CORRECTION
		:

The Request for Recalculation is **GRANTED** to the extent indicated.

The patent term adjustment has been determined to be **1106** days. The USPTO will *sua sponte* issue a certificate of correction reflecting the amount of PTA days determined by the recalculation.

Prior to the issuance of the certificate of correction, the USPTO will afford patentee an opportunity to be heard and request reconsideration. Accordingly, patentee has **one month or thirty (30) days**, whichever is longer, to file a request for reconsideration of this patent term adjustment calculation. See 35 U.S.C. 154(b)(3)(B)(ii) and 37 CFR 1.322(a)(4). No extensions of time will be granted under 37 CFR 1.136.

Patentee should use document code PET.OP if electronically filing a request for reconsideration of this patent term adjustment calculation. The patentee must also include the information required by 37 CFR 1.705(b)(2) and the fee required by 37 CFR 1.18(e). If patentee does not file a timely request for reconsideration of this patent term adjustment calculation including the information required by 37 CFR 1.705(b)(2) and the fee required by 37 CFR 1.18(e), the USPTO will issue a certificate of correction reflecting the PTA determination noted above.

Patentee should be aware that in order to preserve the right to review in the United States District Court for the District of Columbia of the USPTO patent term adjustment determination, patentee must ensure that he or she also take the steps required under 35 U.S.C. 154(b)(4)(A) in a timely manner. Nothing in the request for recalculation should be construed as providing an alternative time frame for commencing a civil action under 35 U.S.C. 154(b)(4)(A).

Any questions concerning this decision should be directed to the Office of Patent Legal Administration at 571-272-7702.

UNITED STATES PATENT AND TRADEMARK OFFICE

Commissioner for Patents
United States Patent and Trademark Office
P.O. Box 1450
Alexandria, VA 22313-1450
www.uspto.gov

Mailed: 5-2-07

gm

In re application of	:	
Shimek et al.	:	DECISION
Serial No. 10/620,038	:	DISMISSING
Filed: July 15, 2003	:	PETITION
For: Soft Dried Marshmallow and Method of Preparation	:	

This is a decision on the PETITION TO WITHDRAW PREMATURE FINAL REJECTION filed April 5, 2007.

The petition requests that the finality of the Office action mailed February 22, 2007 be withdrawn. On April 24, 2007, the examiner issued a new, non-final Office action which withdrew the finality of the prior action.

As the examiner has already properly granted the requested relief, the instant petition is **DISMISSED** as moot.

Marian C. Knox for
Jacqueline M. Stone, Director
Technology Center 1700
Chemical and Materials Engineering

GENERAL MILLS, INC.
P.O. BOX 1113
MINNEAPOLIS MN 55440

UNITED STATES PATENT AND TRADEMARK OFFICE

Commissioner for Patents
United States Patent and Trademark Office
P.O. Box 1450
Alexandria, VA 22313-1450
www.uspto.gov

JJGJR.: 01-06

Paper No: __

OSHA LIANG/MI
ONE HOUSTON CENTER
SUITE 2800
HOUSTON TX 77010

COPY MAILED
JAN 1 1 2006
OFFICE OF PETITIONS

In re Application of :
Horton, et al. :
Application No. 10/620,041 : ON PETITION
Filed: 15 July, 2003 :
Attorney Docket No. 05542/071002 :

This is a decision on the petition filed on 14 November, 2005, under 37 C.F.R. §1.47(a).

For the reasons set forth below, the petition under 37 C.F.R. §1.47(a) is **DISMISSED**.

NOTES:

(1) Any reply must include a renewed petition (and fee) must include a petition under 37 C.F.R. §1.47 and must be submitted within two (2) months from the mail date of this decision. Extensions of time under 37 C.F.R. §1.136(a) are permitted. The reconsideration request should include a cover letter entitled "Petition under 37 C.F.R. §1.47";

(2) Thereafter, there will be no further reconsideration of this matter.

BACKGROUND

The record indicates:

- the instant application was filed on15 July, 2003, without, *inter alia*, a fully executed

oath/declaration;

- on 15 May, 2005, the Examiner mailed an Office action indicating, *inter alia*, that a fully executed oath/declaration (signed and dated) was required;

- on 14 November, 2005, Petitioner filed the instant petition and fee (and request and fee for extension of time) with, *inter alia*, a statement by Jeffrey S. Bergman (Reg. No. 45,925) (Mr. Bergman) that the only information he has is the last known–and apparently no-longer current–address of Kamila B. Abdur-Rahman (Ms. Abdur-Rahman), whose signature was undated and therefore objected to by the Examiner, however, Mr. Berman made no showing whatsoever of any due diligence to find a current address for Ms. Abdur-Rahman.

ANALYSIS

The regulations at 37 C.F.R. §1.47 provide in pertinent part:

> **§ 1.47 Filing when an inventor refuses to sign or cannot be reached.**
> (a) If a joint inventor refuses to join in an application for patent or cannot be found or reached after diligent effort, the application may be made by the other inventor on behalf of himself or herself and the nonsigning inventor. The oath or declaration in such an application must be accompanied by a petition including proof of the pertinent facts, the fee set forth in § 1.17(h), and the last known address of the nonsigning inventor. The nonsigning inventor may subsequently join in the application by filing an oath or declaration complying with §1.63.
> * * *

The regulations at 37 C.F.R. §1.63 provide in pertinent part:

> **§1.63 Oath or declaration.**
>
> (b) In addition to meeting the requirements of paragraph (a)of this section, the oath or declaration must also:
>
> > (1)Identify the application to which it is directed;
> >
> > (2) State that the person making the oath or declaration has reviewed and understands the contents of the application, Including the claims, as amended by any amendment specifically referred to in the oath or declaration; and

> (3) State that the person making the oath or declaration acknowledges the duty to disclose to the Office all information known to the person to be material to patentability as defined in § 1.56.

When one alleges a refusal of the inventor to sign the application papers, the circumstances of the presentation of the application papers and of the refusal must be specified in a statement of facts by the person who, *inter alia*, presented the inventor with the application papers and/or to whom the refusal was made.

The commentary at MPEP §409.03(d) provides:

> **409.03(d) Proof of Unavailability or Refusal**
>
> INVENTOR CANNOT BE REACHED
>
> Where inability to find or reach a nonsigning inventor "after diligent effort" is the reason for filing under 37 C.F.R. §1.47, a statement of facts should be submitted that fully describes the exact facts which are relied on to establish that a diligent effort was made.
>
> The fact that a nonsigning inventor is on vacation or out of town and is therefore temporarily unavailable to sign the declaration is not an acceptable reason for filing under 37 C.F.R. §1.47.
>
> Furthermore, the fact that an inventor is hospitalized and/or is not conscious is not an acceptable reason for filing under 37 C.F.R. §1.47. 37 C.F.R. §1.43 may be available under these circumstances. See MPEP §409.02. Such a petition under 37 C.F.R. §1.47 will be dismissed as inappropriate.
>
> The statement of facts must be signed, where at all possible, by a person having firsthand knowledge of the facts recited therein. Statements based on hearsay will not normally be accepted. Copies of documentary evidence such as internet searches, certified mail return receipts, cover letters of instructions, telegrams, that support a finding that the nonsigning inventor could not be found or reached should be made part of the statement. The steps taken to locate the whereabouts of the nonsigning inventor should be included statement of facts. It is important that the statement contain facts as opposed to conclusions.
>
> REFUSAL TO JOIN
>
> A refusal by an inventor to sign an oath or declaration when the inventor has not

been presented with the application papers does not itself suggest that the inventor is refusing to join the application unless it is clear that the inventor understands exactly what he or she is being asked to sign and refuses to accept the application papers. A copy of the application papers should be sent to the last known address of the nonsigning inventor, or, if the nonsigning inventor is represented by counsel, to the address of the nonsigning inventor's attorney. The fact that an application may contain proprietary information does not relieve the 37 C.F.R. §1.47 applicant of the responsibility to present the application papers to the inventor if the inventor is willing to receive the papers in order to sign the oath or declaration. It is noted that the inventor may obtain a complete copy of the application, unless the inventor has assigned his or her interest in the application, and the assignee has requested that the inventor not be permitted access. See MPEP §106. It is reasonable to require that the inventor be presented with the application papers before a petition under 37 C.F.R. §1.47 is granted since such a procedure ensures that the inventor is apprised of the application to which the oath or declaration is directed. In re Gray, 115 USPQ 80 (Comm'r Pat. 1956).

Where a refusal of the inventor to sign the application papers is alleged, the circumstances of the presentation of the application papers and of the refusal must be specified in a statement of facts by the person who presented the inventor with the application papers and/or to whom the refusal was made. Statements by a party not present when an oral refusal is made will not be accepted.

Proof that a bona fide attempt was made to present a copy of the application papers (specification, including claims, drawings, and oath or declaration) to the nonsigning inventor for signature, but the inventor refused to accept delivery of the papers or expressly stated that the application papers should not be sent, may be sufficient.

When there is an express oral refusal, that fact along with the time and place of the refusal must be stated in the statement of facts. When there is an express written refusal, a copy of the document evidencing that refusal must be made part of the statement of facts. The document may be redacted to remove material not related to the inventor's reasons for refusal.

When it is concluded by the 37 C.F.R. §1.47 applicant that a nonsigning inventor's conduct constitutes a refusal, all facts upon which that conclusion is based should be stated in the statement of facts in support of the petition or directly in the petition. If there is documentary evidence to support facts alleged in the petition or in any statement of facts, such evidence should be submitted. Whenever a nonsigning inventor gives a reason for refusing to sign the application oath or declaration, that reason should be stated in the petition.

Thus, not only must a copy of the entire application must be sent to the last known address of the non-signing inventor (or the estate representative) with a request that he/she sign the declaration for the patent application–and evidence of that transmittal submitted–but also a reasonable effort must be made to ascertain a current or last known address, and the petition (with fee) must state over the signature and registration number of the Petitioner the last known address and, if appropriate, evidence of the due diligence effort ascertaining same.

Alternatively, an oath or declaration for the patent application in compliance with 37 C.F.R. §§1.63 and 1.64 must be presented.

(The declaration must set forth the inventor's residence, citizenship and post office address. An oath or declaration in compliance with 37 C.F.R. §§1.63 and 1.64 signed by the Rule 1.47 applicant is required.[1])

CONCLUSION

The record as it stands is incomplete as to the copy of the referenced transmittal letter (to support and evidence transmittal of the entire application (description, claims, abstract and drawings) to the non-signing inventor at current/valid (or at least last-known/ascertainable) addresses. The evidence of these requirements should be submitted with any renewed petition.

Out of an abundance of caution and because, *inter alia*, a property right is in question, Petitioner is requested to submit a copy of the transmittal letter with a renewed petition.

Therefore, the instant petition hereby is **dismissed**.

Further correspondence with respect to this matter should be addressed as follows:[2]

By mail: Commissioner for Patents[3]
P.O. Box 1450
Alexandria, VA 22313-1450

---

[1] See: MPEP 409.03(b).

[2] On July 15, 2005, the Central Facsimile (FAX) Number will change from (703) 872-9306 to (571) 273-8300. Faxes sent to the old number will be routed to the new number until September 15, 2005. After September 15, 2005, the old number will no longer be in service and (571) 273-8300 will be the only facsimile number recognized for centralized delivery. (For further information. see: http://www.uspto.gov/web/offices/pac/dapp/opla/preognotice/cfax062005.pdf .)

[3] To determine the appropriate addresses for other subject-specific correspondence, refer to the USPTO Web site at www.uspto.gov.

By FAX: IFW Formal Filings
(571) 273-8300
ATTN.: Office of Petitions

By hand: Mail Stop: Petition
Customer Service Window
Randolph Building
401 Dulany Street
Alexandria, VA 22314

Telephone inquiries regarding this decision should be directed to the undersigned at (571) 272-3214.

John J. Gillon, Jr.
Senior Attorney
Office of Petitions

UNITED STATES PATENT AND TRADEMARK OFFICE

Commissioner for Patents
United States Patent and Trademark Office
P.O. Box 1450
Alexandria, VA 22313-1450
www.uspto.gov

JJGJR.: 06-06

Paper No: __

OSHA LIANG/MI
ONE HOUSTON CENTER
SUITE 2800
HOUSTON TX 77010

COPY MAILED

JUN 0 5 2006

OFFICE OF PETITIONS

ON PETITION

In re Application of :
Horton, et al. :
Application No. 10/620,041 :
Filed: 15 July, 2003 :
Attorney Docket No. 05542/071002 :

This is a decision on the petition filed on 11 May, 2006, under 37 C.F.R. §1.47(a).

For the reasons set forth below, the petition under 37 C.F.R. §1.47(a) is **DISMISSED**.

NOTES:

(1) Any reply must include a renewed petition (and fee) must include a petition under 37 C.F.R. §1.47 and must be submitted within two (2) months from the mail date of this decision. Extensions of time under 37 C.F.R. §1.136(a) are permitted. The reconsideration request should include a cover letter entitled "Petition under 37 C.F.R. §1.47";

(2) Thereafter, there will be no further reconsideration of this matter.

BACKGROUND

The record indicates:

- the instant application was filed on15 July, 2003, without, *inter alia*, a fully executed

oath/declaration;

- on 15 May, 2005, the Examiner mailed an Office action indicating, *inter alia*, that a fully executed oath/declaration (signed and dated) was required;

- on 14 November, 2005, Petitioner filed the original petition and fee (and request and fee for extension of time) with, *inter alia*, a statement by Jeffrey S. Bergman (Reg. No. 45,925) (Mr. Bergman) that the only information he has is the last known–and apparently no-longer current–address of Kamila B. Abdur-Rahman (Ms. Abdur-Rahman), whose signature was undated and therefore objected to by the Examiner, however, Mr. Berman made no showing whatsoever of any due diligence to find a current address for Ms. Abdur-Rahman; and for those reasons the petition was dismissed on 11 January, 2006;

- the instant petition was filed (with request and fee for extension of time) on 11 May, 2006, and makes no further showing–more than 100 pages of filing aside–than that patent paralegal Ms. Leah S. Bardin requested information from the company's human resources office and mailed one additional certified mail letter, but there is no statement as to the response if any from the U.S. Postal Service on the receipt–moreover, there is no showing as to a search of databases or professional entities to which a person with the expertise of the inventor in question might belong.

ANALYSIS

The regulations at 37 C.F.R. §1.47 provide in pertinent part:

> **§ 1.47 Filing when an inventor refuses to sign or cannot be reached.**
> (a) If a joint inventor refuses to join in an application for patent or cannot be found or reached after diligent effort, the application may be made by the other inventor on behalf of himself or herself and the nonsigning inventor. The oath or declaration in such an application must be accompanied by a petition including proof of the pertinent facts, the fee set forth in § 1.17(h), and the last known address of the nonsigning inventor. The nonsigning inventor may subsequently join in the application by filing an oath or declaration complying with §1.63.
> * * *

The regulations at 37 C.F.R. §1.63 provide in pertinent part:

> **§1.63 Oath or declaration.**
>
> (b) In addition to meeting the requirements of paragraph (a)of this section, the oath or declaration must also:

(1)Identify the application to which it is directed;

(2) State that the person making the oath or declaration has reviewed and understands the contents of the application, Including the claims, as amended by any amendment specifically referred to in the oath or declaration; and

(3) State that the person making the oath or declaration acknowledges the duty to disclose to the Office all information known to the person to be material to patentability as defined in § 1.56.

When one alleges a refusal of the inventor to sign the application papers, the circumstances of the presentation of the application papers and of the refusal must be specified in a statement of facts by the person who, *inter alia*, presented the inventor with the application papers and/or to whom the refusal was made.

The commentary at MPEP §409.03(d) provides:

409.03(d) Proof of Unavailability or Refusal

INVENTOR CANNOT BE REACHED

Where inability to find or reach a nonsigning inventor "after diligent effort" is the reason for filing under 37 C.F.R. §1.47, a statement of facts should be submitted that fully describes the exact facts which are relied on to establish that a diligent effort was made.

The fact that a nonsigning inventor is on vacation or out of town and is therefore temporarily unavailable to sign the declaration is not an acceptable reason for filing under 37 C.F.R. §1.47.

Furthermore, the fact that an inventor is hospitalized and/or is not conscious is not an acceptable reason for filing under 37 C.F.R. §1.47. 37 C.F.R. §1.43 may be available under these circumstances. See MPEP §409.02. Such a petition under 37 C.F.R. §1.47 will be dismissed as inappropriate.

The statement of facts must be signed, where at all possible, by a person having firsthand knowledge of the facts recited therein. Statements based on hearsay will not normally be accepted. Copies of documentary evidence such as internet searches, certified mail return receipts, cover letters of instructions, telegrams, that support a finding that the nonsigning inventor could not be found or reached

should be made part of the statement. The steps taken to locate the whereabouts of the nonsigning inventor should be included statement of facts. It is important that the statement contain facts as opposed to conclusions.

REFUSAL TO JOIN

A refusal by an inventor to sign an oath or declaration when the inventor has not been presented with the application papers does not itself suggest that the inventor is refusing to join the application unless it is clear that the inventor understands exactly what he or she is being asked to sign and refuses to accept the application papers. A copy of the application papers should be sent to the last known address of the nonsigning inventor, or, if the nonsigning inventor is represented by counsel, to the address of the nonsigning inventor's attorney. The fact that an application may contain proprietary information does not relieve the 37 C.F.R. §1.47 applicant of the responsibility to present the application papers to the inventor if the inventor is willing to receive the papers in order to sign the oath or declaration. It is noted that the inventor may obtain a complete copy of the application, unless the inventor has assigned his or her interest in the application, and the assignee has requested that the inventor not be permitted access. See MPEP §106. It is reasonable to require that the inventor be presented with the application papers before a petition under 37 C.F.R. §1.47 is granted since such a procedure ensures that the inventor is apprised of the application to which the oath or declaration is directed. In re Gray, 115 USPQ 80 (Comm'r Pat. 1956).

Where a refusal of the inventor to sign the application papers is alleged, the circumstances of the presentation of the application papers and of the refusal must be specified in a statement of facts by the person who presented the inventor with the application papers and/or to whom the refusal was made. Statements by a party not present when an oral refusal is made will not be accepted.

Proof that a bona fide attempt was made to present a copy of the application papers (specification, including claims, drawings, and oath or declaration) to the nonsigning inventor for signature, but the inventor refused to accept delivery of the papers or expressly stated that the application papers should not be sent, may be sufficient.

When there is an express oral refusal, that fact along with the time and place of the refusal must be stated in the statement of facts. When there is an express written refusal, a copy of the document evidencing that refusal must be made part of the statement of facts. The document may be redacted to remove material not related to the inventor's reasons for refusal.

> When it is concluded by the 37 C.F.R. §1.47 applicant that a nonsigning inventor's conduct constitutes a refusal, all facts upon which that conclusion is based should be stated in the statement of facts in support of the petition or directly in the petition. If there is documentary evidence to support facts alleged in the petition or in any statement of facts, such evidence should be submitted. Whenever a nonsigning inventor gives a reason for refusing to sign the application oath or declaration, that reason should be stated in the petition.

Thus, not only must a copy of the entire application must be sent to the last known address of the non-signing inventor (or the estate representative) with a request that he/she sign the declaration for the patent application–and evidence of that transmittal submitted–but also a reasonable effort must be made to ascertain a current or last known address, and the petition (with fee) must state over the signature and registration number of the Petitioner the last known address and, if appropriate, evidence of the due diligence effort ascertaining same.

Alternatively, an oath or declaration for the patent application in compliance with 37 C.F.R. §§1.63 and 1.64 must be presented.

(The declaration must set forth the inventor's residence, citizenship and post office address. An oath or declaration in compliance with 37 C.F.R. §§1.63 and 1.64 signed by the Rule 1.47 applicant is required.[1])

CONCLUSION

The record as it stands is incomplete as to the copy of the referenced transmittal letter (to support and evidence transmittal of the entire application (description, claims, abstract and drawings) to the non-signing inventor at current/valid (or at least last-known/ascertainable) addresses. Because, *inter alia*, a property right is in question evidence of these requirements should be submitted with any renewed petition.

Therefore, the instant petition hereby is **dismissed**.

Further correspondence with respect to this matter should be addressed as follows:[2]

---

[1] See: MPEP 409.03(b).

[2] On July 15, 2005, the Central Facsimile (FAX) Number will change from (703) 872-9306 to (571) 273-8300. Faxes sent to the old number will be routed to the new number until September 15, 2005. After September 15, 2005, the old number will no longer be in service and (571) 273-8300 will be the only facsimile number recognized for centralized delivery. (For further information. see: http://www.uspto.gov/web/offices/pac/dapp/opla/preognotice/cfax062005.pdf .)

By mail: Commissioner for Patents[3]
P.O. Box 1450
Alexandria, VA 22313-1450

By FAX: IFW Formal Filings
(571) 273-8300
ATTN.: Office of Petitions

By hand: Mail Stop: Petition
Customer Service Window
Randolph Building
401 Dulany Street
Alexandria, VA 22314

Telephone inquiries regarding this decision should be directed to the undersigned at (571) 272-3214.

John J. Gillon, Jr.
Senior Attorney
Office of Petitions

[3] To determine the appropriate addresses for other subject-specific correspondence, refer to the USPTO Web site at www.uspto.gov.

UNITED STATES PATENT AND TRADEMARK OFFICE

Commissioner for Patents
United States Patent and Trademark Office
P.O. Box 1450
Alexandria, VA 22313-1450
www.uspto.gov

Meadwestvaco Corporation
Attn: IP Legal Department
1021 Main Campus Drive
Raleigh, NC 27606

COPY MAILED
JAN 13 2010

In re Application of	:	
Donald D. Foster et al.	:	
Application No. 10/620,043	:	DECISION ON PETITION
Filed: July 15, 2003	:	
Attorney Docket No. 21497	:	

This is a decision on the petition under the unintentional provisions of 37 CFR 1.137(b), filed November 2, 2009, to revive the above-identified application.

The petition is **GRANTED**.

This application became abandoned for failure to timely pay the issue and publication fees on or before October 19, 2009, as required by the Notice of Allowance and Fee(s) Due, mailed July 17, 2009. Accordingly, the date of abandonment of this application is October 20, 2009. A Notice of Abandonment was mailed on November 3, 2009.

The petition satisfies the requirements of 37 CFR 1.137(b) in that petitioner has supplied (1) the reply in the form of payment of the issue fee of $1,510 and the publication fee of $300, (2) the petition fee of $1,620, and (3) a proper statement of unintentional delay. Accordingly, the issue and publication fees are accepted as being unintentionally delayed.

The petition and publication fees were paid along with the filing of this petition. An additional fee of $1,510 is due for the issue fee. As authorized this fee will be charged to deposit account number 13-2500.

37 CFR 1.137(b)(3) requires a statement that the entire delay in filing the required reply from the due date for the reply until the filing of a grantable petition pursuant to 37 CFR 1.137(b) was unintentional. Since the statement contained in the petition varies from the language required by 37 CFR 1.137(b)(3), the statement contained in the petition is being construed as the statement required by 37 CFR 1.137(b)(3). Petitioner must notify the Office if this is **not** a correct interpretation of the statement contained in the petition.

Telephone inquiries concerning this decision should be directed to Kimberly Inabinet at (571) 272-4618.

This application is being referred to the Office of Data Management for further processing into a patent.

Carl Friedman
Petitions Examiner
Office of Petitions

UNITED STATES PATENT AND TRADEMARK OFFICE

COMMISSIONER FOR PATENTS
UNITED STATES PATENT AND TRADEMARK OFFICE
P.O. BOX 1450
ALEXANDRIA, VA 22313-1450
WWW.USPTO.GOV

Paper No. None

IMMUNEX CORPORATION
LAW DEPARTMENT
1201 AMGEN COURT WEST
SEATTLE WA 98119

COPY MAILED

SEP 0 9 2004

OFFICE OF PETITIONS

In re Application of
Brian D. Follstad
Application No. 10/620,064
Filed: July 15, 2003
Attorney Docket No.: 3374-A
Title: METHOD AND MEDIA FOR CONTROLLING SIALYLATION OF PROTEINS PRODUCED BY MAMALIAN CELLS

DECISION ON PETITION UNDER 37 C.F.R. §1.182

BACKGROUND

This is a decision on the petition under 37 CFR §1.182, filed February 17, 2004, to revive the above-identified application.

On October 17, 2003, Petitioner was mailed a Notice of Missing Parts (notice), which set a shortened statutory period for reply of two (2) months. The notice indicated that an executed oath or declaration was required, along with the associated surcharge of $130.

With the instant petition, Petitioner has submitted the petition fee and surcharge, along with a two-month extension of time. Petitioner has also submitted a docket record, along with an assertion that the notice was not received. In January of 2004, Petitioner submitted a status inquiry, and learned of the notice. At which time, a copy of said notice was sent to him via facsimile transmission. Petitioner requests that the time period for reply be reset, and the extension of time fees be refunded.

THE PORTION OF THE MPEP RELEVANT TO THE INSTANT PETITION

MPEP 711.03(c) states, in part:

In Delgar v. Schulyer, 172 USPQ 513 (D.D.C. 1971), the court decided that the Office should mail a new Notice of Allowance in view of the evidence presented in support of

the contention that the applicant's representative did not receive the original Notice of Allowance. Under the reasoning of Delgar, an allegation that an Office action was never received may be considered in a petition to withdraw the holding of abandonment. If adequately supported, the Office may grant the petition to withdraw the holding of abandonment and remail the Office action. That is, the reasoning of Delgar is applicable regardless of whether an application is held abandoned for failure to timely pay the issue fee (35 U.S.C. 151) or for failure to prosecute (35 U.S.C. 133).

To minimize costs and burdens to practitioners and the Office, the Office has modified the showing required to establish nonreceipt of an Office action. The showing required to establish nonreceipt of an Office communication must include a statement from the practitioner stating that the Office communication was not received by the practitioner and attesting to the fact that a search of the file jacket and docket records indicates that the Office communication was not received. A copy of the docket record where the nonreceived Office communication would have been entered had it been received and docketed must be attached to and referenced in practitioner's statement. For example, if a three month period for reply was set in the nonreceived Office action, a copy of the docket report showing all replies docketed for a date three months from the mail date of the nonreceived Office action must be submitted as documentary proof of nonreceipt of the Office action. See Notice entitled "Withdrawing the Holding of Abandonment When Office Actions Are Not Received," 1156 O.G. 53 (November 16, 1993).

The showing outlined above may not be sufficient if there are circumstances that point to a conclusion that the Office action may have been lost after receipt rather than a conclusion that the Office action was lost in the mail (e.g., if the practitioner has a history of not receiving Office actions).

ANALYSIS

The docket report Petitioner has submitted has been reviewed by the undersigned, and it is noted that the relevant mailing does not appear. Unfortunately, Petitioner has failed to establish non-receipt of the Office communication, in that he has not submitted an attestation that he has searched the file jacket and the place where he normally would keep such communications and could not find it.

CONCLUSION

Consequently, the petition is **DISMISSED**.

Should petitioner desire to file a renewed petition, petitioner should first conduct these searches, and include the requisite attestations.

Any response to this decision must be submitted within **TWO (2) MONTHS** from the mail date of this decision. Extension of time under 37 CFR 1.136(a) are permitted. The submission should include a cover letter entitled "Renewed Petition Under 37 CFR §1.182". This is not a final agency action within the meaning of 5 U.S.C 704.

The renewed petition should display "Please deliver to Paul Shanoski, c/o Office of Petitions" in a prominent manner.

To help assure prompt and proper attention to your response, please see Request for Alert Concerning Submitted Petitions, 1282 Official Gazette (May 18, 2004) for further information on how to assist the Office in delivering your submission to the correct location. The Petitioner

may wish to consider telephoning the undersigned one month after the submission is made to confirm that the documents were properly delivered.

Any renewed petition may be submitted by mail[1], hand-delivery[2], or facsimile[3].

The application file will be retained in the Office of Petitions for two (2) months.

Telephone inquiries regarding *this decision* should be directed to the undersigned at (703) 305-0011. Please note that on approximately September 28, 2004, the Office of Petitions will relocate to the new PTO location in Alexandria. Although the mailing address will remain the same, the general phone number for the Office of Petitions which should be used for status requests will change to 571-272-3282, and the telephone number for the undersigned will change to 571-272-3225.

Paul Shanoski
Senior Attorney
Office of Petitions
United States Patent and Trademark Office

1 Mail Stop Petition, Commissioner for Patents, United States Patent and Trademark Office, P.O. Box 1450, Alexandria, VA, 22313-1450.

2 Customer Window, Mail Stop Petition, Crystal Plaza Two, Lobby, Room 1B03, Arlington, Virginia 22202.

3 (703) 872-9306 - please note this is a central facsimile number, and as such, there will be a delay in the delivery of the facsimile to the undersigned, which could be as much as one month.

UNITED STATES PATENT AND TRADEMARK OFFICE

COMMISSIONER FOR PATENTS
UNITED STATES PATENT AND TRADEMARK OFFICE
P.O. BOX 1450
ALEXANDRIA, VA 22313-1450
WWW.USPTO.GOV

Paper No. None

IMMUNEX CORPORATION
LAW DEPARTMENT
1201 AMGEN COURT WEST
SEATTLE WA 98119

COPY MAILED

JAN 0 4 2005

OFFICE OF PETITIONS

In re Application of
Brian D. Follstad
Application No. 10/620,064
Filed: July 15, 2003
Attorney Docket No.: 3374-A
Title: METHOD AND MEDIA FOR CONTROLLING SIALYLATION OF PROTEINS PRODUCED BY MAMALIAN CELLS

DECISION ON RENEWED PETITION UNDER 37 C.F.R. §1.182

This is a decision on the renewed petition under 37 CFR §1.182, filed November 8, 2004.

On October 17, 2003, Petitioner was mailed a Notice of Missing Parts (notice), which set a shortened statutory period for reply of two (2) months. The notice indicated that an executed oath or declaration was required, along with the associated surcharge of $130.

With the original petition, received on February 17, 2004, Petitioner submitted the petition fee and surcharge, along with a two-month extension of time. Petitioner also submitted a docket record, along with an assertion that the notice was not received. In January of 2004, Petitioner submitted a status inquiry, and learned of the notice. At which time, a copy of said notice was sent to him via facsimile transmission. Petitioner requested that the time period for reply be reset, and the extension of time fees be refunded.

A decision was mailed on September 9, 2004, which dismissed the petition for failing to include an attestation that Petitioner searched the file jacket and the place where she normally would keep such communications and could not find it.

With the renewed petition, Petitioner has rectified these deficiencies. As such, the renewed petitioner is **GRANTED** and the response to the notice of October 17, 2003 will be considered to have been timely filed.

As such, the two-month extension of time fee will be refunded to Petitioner's Deposit Account, as authorized in the original petition.

After the mailing of this decision, the application will be forwarded to Technology Center 1600 for further processing.

The general phone number for the Office of Petitions which should be used for status requests is (571) 272-3282. Telephone inquiries regarding *this decision* should be directed to the undersigned at (571) 272-3225.

Paul Shanoski
Senior Attorney
Office of Petitions
United States Patent and Trademark Office

UNITED STATES PATENT AND TRADEMARK OFFICE

COMMISSIONER FOR PATENTS
UNITED STATES PATENT AND TRADEMARK OFFICE
P.O. BOX 1450
ALEXANDRIA, VA 22313-1450
www.uspto.gov

FITZPATRICK CELLA HARPER & SCINTO
30 ROCKEFELLER PLAZA
NEW YORK NY 10112

COPY MAILED

DEC 14 2004

OFFICE OF PETITIONS

Applicant: Kiik et al.
Appl. No.: 10/620,077
Filing Date: Jly 15, 2003
Title: FASTENER-FREE COMPOSITE ROOFING PRODUCT
Attorney Docket No.: 03137000003
Pub. No.: US 2004/0055240 A1
Pub. Date: March 25, 2004

This is in response to the request for correction of patent application publication under 37 CFR 1.221(b), which was received on May 18, 2004.

The request is DISMISSED.

The instant request is that the patent application publication be republished because the publication includes many errors such as misspelling the title "Fastener-Free Composite Roofing Product" as "Fastener-Free Composite Roofing Shingle," misspelling "Tamko" as "Tainko" and listing "Dallas, TX", not "Richardson, TX" for the first named inventor.

37 CFR 1.221(b) is applicable "only when the Office makes a material mistake which is apparent from Office records . . .. This period is not extendable." A material mistake must affect the public's ability to appreciate the technical disclosure of the patent application publication, to determine the scope of the patent application publication, or to determine the scope of the provisional rights that an applicant may seek to enforce upon issuance of a patent.[1]

The title of the invention was improperly published as listed on the Application Data Sheet (ADS), which was later changed by the later filed declaration. The city for the first named inventor was properly published, as the later filed declaration has priority over the earlier filed ADS. With respect to the typographical error wherein, "Tamko" is misspelled as "Tainko", this is a minor typographical as it is included in a long list of materials, which also includes the manufacturing information. The errors are minor typographical errors which are understandable from reading the sentence, paragraph and specification in which the terms are used, as terms are not read in a vacuum. The mistakes do not affect the public's ability to appreciate the technical disclosure of the patent application publication, or determine the scope of the patent application publication or determine the scope of the provisional rights that an applicant may seek to enforce

[1] Changes to Implement Eighteen-Month Publication of Patent Applications, 65 FR 57023, 57038 (Sept. 20, 2000), 1239 Off. Gaz. Pat. Office Notices 63, 75 (Oct. 10, 2000) (final rule).

upon issuance of a patent.

The applicant is advised that a "request for republication of an application previously published" may be filed under 37 CFR 1.221(a). Such a request for republication "must include a copy of the application in compliance with the Office's electronic filing system requirements and be accompanied by the publication fee set forth in § 1.18(d) and the processing fee set forth in § 1.17(i)." If the request for republication does not comply with the electronic filing system requirements, the republication will not take place and the publication fee set forth in § 1.18(d) will be refunded. The processing fee will be retained.

Applicant should submit a supplemental ADS to change the city of the first named inventor.

To avoid this type of problem in the future, applicant's representative should review the filing receipt and make a request for a corrected filing receipt using the facsimile number (703-746-9195) on the Filing Receipt.

Any request for republication under 37 CFR 1.221(a), must be submitted via the EFS system and questions should be addressed as follows:

By mail to: Mail Stop PGPUB
Commissioner for Patents
P.O. Box 1450
Alexandria, VA 22313-1450

By facsimile: 703-872-9306

Inquires concerning this communication should be directed to Mark Polutta at (571) 272-7709.

Mark O. Polutta
Office of Patent Legal Administration
Office of the Deputy Commissioner
for Patent Examination Policy

UNITED STATES PATENT AND TRADEMARK OFFICE

Commissioner for Patents
United States Patent and Trademark Office
P.O. Box 1450
Alexandria, VA 22313-1450
www.uspto.gov

KODA & ANDROLIA
2029 CENTURY PARK EAST
SUITE 1140
LOS ANGELES, CA 90067-2983

COPY MAILED

MAR 17 2006

OFFICE OF PETITIONS

In re Application of :
Shohei Sato :
Application No. 10/620,094 : ON PETITION
Filed: July 15, 2003 :
Attorney Docket No. 29A 3453

This is a decision on the petition filed, March 8, 2006 under 37 CFR 1.313(c)(2) to withdraw the above-identified application from issue after payment of the issue fee.

The petition is **GRANTED**.

The above-identified application is withdrawn from issue for consideration of a submission under 37 CFR 1.114 (request for continued examination). See 37 CFR 1.313(c)(2).

Petitioner is advised that the issue fee paid on January 23, 2006 in the above-identified application cannot be refunded. If, however, the above-identified application is again allowed, petitioner may request that it be applied towards the issue fee required by the new Notice of Allowance.[1]

Telephone inquiries should be directed to Irvin Dingle at (571) 272-3210.

This matter is being referred to Technology Center AU 2834 for processing of the request for continued examination under 37 CFR 1.114 and for consideration of the concurrently filed Information Disclosure Statement.

Irvin Dingle
Petitions Examiner
Office of Petitions

---

[1] The request to apply the issue fee to the new Notice may be satisfied by completing and returning the new Issue Fee Transmittal Form PTOL-85(b), which includes the following language thereon: Commissioner for Patents is requested to apply the Issue Fee and Publication Fee (if any) or re-apply any previously paid issue fee to the application identified above. Petitioner is advised that, whether a fee is indicated as being due or not, the Issue Fee Transmittal Form **must** be completed and timely submitted to avoid abandonment. Note the language in bold text on the first page of the Notice of Allowance and Fee(s) Due (PTOL-85).

UNITED STATES PATENT AND TRADEMARK OFFICE

COMMISSIONER FOR PATENTS
UNITED STATES PATENT AND TRADEMARK OFFICE
P.O. BOX 1450
ALEXANDRIA, VA 22313-1450
www.uspto.gov

HAYES, SOLOWAY P.C.
3450 E. SUNRISE DRIVE, SUITE 140
TUCSON AZ 85718

COPY MAILED
MAY 16 2006
OFFICE OF PETITIONS

Applicant: Horiuchi et al.
Appl. No.: 10/620,125
Filing Date: July 15, 2003
Title: METHOD FOR MANUFACTURING LIQUID CRYSTAL DISPLAY DEVICE
Pub. No.: US 2005/0024580 A1
Pub. Date: February 3, 2005

This is a decision on the request for a corrected patent application publication under 37 CFR 1.221(b), filed on August 8, 2005, for the above-identified application

The request is DISMISSED.

The instant request is that the application be republished because the patent application publication contains a material error, as the in paragraph [00331] "lower plate 101" is misprinted as "lower plate 110".

37 CFR 1.221 (b) is applicable "only when the Office makes a material mistake which is apparent from Office records.... Any request for a corrected publication or revised patent application publication other than provided as provided in paragraph (a) of this section must be filed within two months from the date of the patent application publication. This period is not extendable." A material mistake must affect the public's ability to appreciate the technical disclosure of the patent application publication, to determine the scope of the patent application publication, or to determine the scope of the provisional rights that an applicant may seek to enforce upon issuance of a patent. [1]

The request for corrected publication received on August 8, 2005, was not timely filed under 37 CFR 1.221(b).

The applicant is advised that a "request for republication of an application previously published" may be filed under 37 CFR 1.221 (a). Such a request for republication "must include a copy of the application compliance with the Office's electronic filing system requirements and be accompanied by the publication fee set forth in § 1.18 (d) and the processing fee set forth in § 1.17 (i)." If the request for republication does not comply with the electronic filing system

[1] Changes to Implement Eighteen-Month Publication of Patent Applications, 65 FR 57023, 57038 (Sept. 20, 2000), 1239, Off. Gaz. Pat. Office Notices 63, 75 (Oct. 10, 2000) (final rule).

requirements, the republication will not take place and the publication fee set forth in § 1.18 (d) will be refunded. The processing fee will be retained.

Any request for republication under 37 CFR 1.221(a), must be submitted via the EFS system and questions or request for reconsideration of the decision, should be addressed as follows:

By mail to: Mail Stop PGPUB
Commissioner for Patents
P.O. Box 1450
Alexandria, Va. 22313-1450

By facsimile: 571-273-8300

Inquiries relating to this matter may be directed to Mark Polutta at (571) 272-7709 (voice).

Mark O. Polutta
Senior Legal Advisor
Office of Patent Legal Administration
Office of the Deputy Commissioner
for Patent Examination Policy

UNITED STATES PATENT AND TRADEMARK OFFICE

UNITED STATES DEPARTMENT OF COMMERCE
United States Patent and Trademark Office
Address: COMMISSIONER FOR PATENTS
P.O. Box 1450
Alexandria, Virginia 22313-1450
www.uspto.gov

Christopher M. Goff (27839)
ARMSTRONG TEASDALE LLP
ONE METROPOLITAN SQUARE
SUITE 2600
ST. LOUIS, MO 63102

Mail Date: 04/20/2010

Applicant	: Karen Hargett Bean	: DECISION ON REQUEST FOR
Patent Number	: 7594906	: RECALCULATION of PATENT
Issue Date	: 09/29/2009	: TERM ADJUSTMENT IN VIEW
Appliction No	: 10/620,142	: OF WYETH AND NOTICE OF INTENT TO
Filed	: 07/15/2003	: ISSUE CERTIFICATE OF CORRECTION
		:

The Request for Recalculation is **GRANTED** to the extent indicated.

The patent term adjustment has been determined to be **1327** days. The USPTO will *sua sponte* issue a certificate of correction reflecting the amount of PTA days determined by the recalculation.

Prior to the issuance of the certificate of correction, the USPTO will afford patentee an opportunity to be heard and request reconsideration. Accordingly, patentee has **one month or thirty (30) days**, whichever is longer, to file a request for reconsideration of this patent term adjustment calculation. See 35 U.S.C. 154(b)(3)(B)(ii) and 37 CFR 1.322(a)(4). No extensions of time will be granted under 37 CFR 1.136.

Patentee should use document code PET.OP if electronically filing a request for reconsideration of this patent term adjustment calculation. The patentee must also include the information required by 37 CFR 1.705(b)(2) and the fee required by 37 CFR 1.18(e). If patentee does not file a timely request for reconsideration of this patent term adjustment calculation including the information required by 37 CFR 1.705(b)(2) and the fee required by 37 CFR 1.18(e), the USPTO will issue a certificate of correction reflecting the PTA determination noted above.

Patentee should be aware that in order to preserve the right to review in the United States District Court for the District of Columbia of the USPTO patent term adjustment determination, patentee must ensure that he or she also take the steps required under 35 U.S.C. 154(b)(4)(A) in a timely manner. Nothing in the request for recalculation should be construed as providing an alternative time frame for commencing a civil action under 35 U.S.C. 154(b)(4)(A).

Any questions concerning this decision should be directed to the Office of Patent Legal Administration at 571-272-7702.

UNITED STATES PATENT AND TRADEMARK OFFICE

Commissioner for Patents
United States Patent and Trademark Office
P.O. Box 1450
Alexandria, VA 22313-1450
www.uspto.gov

WOODCOCK WASHBURN LLP
CIRA CENTRE, 12TH FLOOR
2929 ARCH STREET
PHILADELPHIA PA 19104-2891

MAILED

MAY 24 2010

OFFICE OF PETITIONS

In re Application of	:	
Seth Jerome Robertson, et al.	:	
Application No. 10/620,156	:	DECISION ON PETITION
Filed: July 14, 2003	:	
Attorney Docket No. 061164-0003US	:	

This is a decision on the petition under the unintentional provisions of 37 CFR 1.137(b), filed April 6, 2010, to revive the above-identified application.

The petition is **GRANTED**.

This application became abandoned for failure to timely pay the issue fee on or before February 2, 2010, as required by the Notice of Allowance and Fee(s) Due, mailed November 2, 2009. Accordingly, the date of abandonment of this application is February 3, 2010. The Notice of Abandonment was mailed February 22, 2010.

The petition satisfies the requirements of 37 CFR 1.137(b) in that petitioner has supplied (1) the reply in the form of payment of the issue fee of $755, (2) the petition fee of $810; and (3) a proper statement of unintentional delay.

Telephone inquiries concerning this decision should be directed to Terri Johnson at (571) 272-2991.

This application is being referred to the Office of Data Management for processing into a patent.

Terri Johnson
Petitions Examiner
Office of Petitions

UNITED STATES PATENT AND TRADEMARK OFFICE

COMMISSIONER FOR PATENTS
UNITED STATES PATENT AND TRADEMARK OFFICE
P.O. BOX 1450
ALEXANDRIA, VA 22313-1450
www.uspto.gov

Colgate-Palmolive Company
909 River Road
P.O. Box 1343
Piscataway, NJ 08855-1343

COPY MAILED
JUL 27 2006
OFFICE OF PETITIONS

In re Application of	:	
Chopra et al.	:	
Application No. 10/620,167	:	DECISION ON PETITION
Filed: July 15, 2003	:	UNDER 37 CFR 1.78(a)(6)
Attorney Docket No. IR6685-00	:	

This is a decision on the petition under 37 CFR § 1.78(a)(6), filed January 24, 2006, to accept an unintentionally delayed claim under 35 U.S.C. § 119(e) for benefit of priority to the prior-filed provisional application set forth in the concurrently filed amendment. The delay in treating this petition is regretted.

The petition is **DISMISSED AS MOOT.**

The petition is accompanied by an amendment to the first sentence of the specification following the title to include a reference to the prior-filed provisional application. While a reference to the prior-filed provisional application was not included in an Application Data Sheet (ADS) or in the first sentence of the specification following the title as required by the rules, a reference, nevertheless, was made in the combined declaration and power of attorney filed with the application.

Where a claim for priority under 37 CFR § 1.78(a)(6) is not included in the first sentence of the specification or in an ADS but does appear either in the oath or declaration or a transmittal letter filed with the application and the Office notes the claim for priority, no petition will be required to accept a late claim for priority. This is because the application would have been scheduled for publication on the basis of the information concerning the claim submitted elsewhere in the application within the time period set forth in 37 CFR § 1.78(a)(5)(ii). On the other hand, if the USPTO does not note the claim for priority to the prior-filed application set forth in the oath or declaration or transmittal letter submitted with the application, a petition will be required to accept a late claim for priority under 37 CFR § 1.78(a)(6).[1] In the present case, the Office noted the claim for priority to the prior-filed provisional application in the transmittal letter filed with the application, as shown by its inclusion on the filing receipt.

[1] *Note* MPEP 201.11 (III)(D) and 66 Federal Register 67087 at 67089 (Dec. 28, 2001), effective December 28, 2001.

In view of the above, the $1370.00 petition fee submitted is unnecessary and will be refunded to petitioner's deposit account in due course.

Any questions concerning this decision on petition may be directed to Derek L. Woods at (571) 272-3232. All other inquiries concerning either the examination procedures or status of the application should be directed to the Technology Center.

This application is being referred to Technology Center AU 1616 for consideration by the examiner of applicant's entitlement to claim benefit of priority under 35 U.S.C. § 119(e) to the prior-filed application.

Frances Hicks

Frances Hicks
Lead Paralegal
Office of Petitions

UNITED STATES PATENT AND TRADEMARK OFFICE

10-15-08

Commissioner for Patents
United States Patent and Trademark Office
P.O. Box 1450
Alexandria, VA 22313-1450
www.uspto.gov

Patent No. : 7,314,623
Ser. No. : 10/620,169
Inventor(s) : Michael J. Grusby, et. al.
Issued : January 1, 2008
Title : METHODS AND COMPOSITIONS FOR MODULATING T HELPER (TH) CELL DEVELOPMENT AND FUNCTION
Docket No. : 01997.043600

Re: Request for Certificate of Correction

Consideration has been given your request for the issuance of a certificate of correction for the above-identified patent under the provisions of Rule(s) 1.322.

Assignees' names and addresses (assignment data) printed in a patent, are based *solely* on information supplied in the appropriate space for identifying the assignment data, i.e., item 3 of the Issue Fee Transmittal Form PTOL-85B. Granting of a request under 37 CFR 3.81(b) is required to correct applicant's error providing ***incorrect or erroneous*** assignment data, *before* issuance of a Certificate of Correction, under 37 CFR 1.323 *(see Manual of Patent Examining Procedures (M.P.E.P) Chp.1400, sect. 1481).* This procedure is required *at any time after the issue fee is paid*, including after issuance of the patent.

In view of the foregoing, your request, in this mater, is hereby denied.

A request to correct the Assignee under 37 CFR 3.81(b) should include:

A. **the processing fee set forth in 37 CFR 1.117(h) (currently $130);**
B. a statement that the failure to include the correct assignee name on the PTOL-85B was inadvertent; and
C. a copy of the Notice of Recordation of Assignment Document, reflecting the reel and frame number where the assignment(s) is recorded and/or reflecting proof of *the date* the assignment was submitted for recordation.

In the Request, Applicant(s) may request that the file be forwarded to Certificates of Correction Branch, for issuance of a Certificate of Correction, if the Request is granted.

Any request under 37 CFR 3.81(b) should be directed to the following address or facsimile number:

By mail: Mail Stop PETITIONS
Commissioner for Patents
Post Office Box 1450
Alexandria, VA 22313-1450

By hand: Customer Service Window
Mail Stop Petitions
Randolph Building
401 Dulany Street
Alexandria, VA 22314

By fax: (703) 872-9306
ATTN: Office of Petitions

If a fee (currently $100) was previously submitted for consideration of a Request for Certificate of Correction, under CFR 1.323, to correct assignment data, , no additional fee is required.

Eva James
For Mary Diggs
Decisions & Certificates
of Correction Branch
(703) **308-9390 ext. 1124** or 125

Fitzptrick, Cella, Harper & Scinto
30 Rockefeller Plaza
New York, NY 10112-3801

UNITED STATES PATENT AND TRADEMARK OFFICE

Commissioner for Patents
United States Patent and Trademark Office
P.O. Box 1450
Alexandria, VA 22313-1450
www.uspto.gov

FITZPATRICK CELLA HARPER & SCINTO
30 ROCKEFELLER PLAZA
NEW YORK NY 10112

COPY MAILED

NOV 0 6 2008

OFFICE OF PETITIONS

In re Patent No. 7,314,623	:	
Application No. 10/620,169	:	
Filed: July 15, 2003	:	ON PETITION
Issued: January 1, 2008	:	
Attorney Docket No. 01997.043600.	:	

This is a decision on the petition filed October 30, 2008, which is being treated as a request under 37 CFR 3.81(b)[1] to add the name of the second assignee on the front page of the above-identified patent by way of a Certificate of Correction.

The request is **GRANTED**.

This matter is being referred to the Certificates of Correction Branch for issuance of the requested Certificate of Correction.

Telephone inquiries concerning this decision may be directed to Joan Olszewski at (571) 272-7751. Inquiries regarding the issuance of a certificate of correction should be directed to the Certificate of Correction Branch at (571) 272-4200.

/Liana Walsh/
Liana Walsh
Petitions Examiner
Office of Petitions

[1] *See* MPEP 1309, subsection II; and Official Gazette of June 22, 2004.

UNITED STATES PATENT AND TRADEMARK OFFICE

UNITED STATES DEPARTMENT OF COMMERCE
United States Patent and Trademark Office
Address: COMMISSIONER FOR PATENTS
P.O. Box 1450
Alexandria, Virginia 22313-1450
www.uspto.gov

PEARNE & GORDON LLP
1801 EAST 9TH STREET
SUITE 1200
CLEVELAND, OH 44114-3108

Mail Date: 04/21/2010

Applicant	: Mitsuru Ozono	: DECISION ON REQUEST FOR
Patent Number	: 7632374	: RECALCULATION of PATENT
Issue Date	: 12/15/2009	: TERM ADJUSTMENT IN VIEW
Appliction No	: 10/620,184	: OF WYETH AND NOTICE OF INTENT TO
Filed	: 07/15/2003	: ISSUE CERTIFICATE OF CORRECTION
		:

The Request for Recalculation is **GRANTED** to the extent indicated.

The patent term adjustment has been determined to be **832** days. The USPTO will *sua sponte* issue a certificate of correction reflecting the amount of PTA days determined by the recalculation.

Prior to the issuance of the certificate of correction, the USPTO will afford patentee an opportunity to be heard and request reconsideration. Accordingly, patentee has **one month or thirty (30) days**, whichever is longer, to file a request for reconsideration of this patent term adjustment calculation. See 35 U.S.C. 154(b)(3)(B)(ii) and 37 CFR 1.322(a)(4). No extensions of time will be granted under 37 CFR 1.136.

Patentee should use document code PET.OP if electronically filing a request for reconsideration of this patent term adjustment calculation. The patentee must also include the information required by 37 CFR 1.705(b)(2) and the fee required by 37 CFR 1.18(e). If patentee does not file a timely request for reconsideration of this patent term adjustment calculation including the information required by 37 CFR 1.705(b)(2) and the fee required by 37 CFR 1.18(e), the USPTO will issue a certificate of correction reflecting the PTA determination noted above.

Patentee should be aware that in order to preserve the right to review in the United States District Court for the District of Columbia of the USPTO patent term adjustment determination, patentee must ensure that he or she also take the steps required under 35 U.S.C. 154(b)(4)(A) in a timely manner. Nothing in the request for recalculation should be construed as providing an alternative time frame for commencing a civil action under 35 U.S.C. 154(b)(4)(A).

Any questions concerning this decision should be directed to the Office of Patent Legal Administration at 571-272-7702.

UNITED STATES PATENT AND TRADEMARK OFFICE

COMMISSIONER FOR PATENTS
UNITED STATES PATENT AND TRADEMARK OFFICE
P.O. BOX 1450
ALEXANDRIA, VA 22313-1450
www.uspto.gov

THOMAS J. BRINDISI, ESQ.
SUITE B
20 28TH PLACE
VENICE, CA 90291

COPY MAILED

FEB 16 2006

OFFICE OF PETITIONS

In re Application of :
David T. Jennings, III :
Application No. 10/620,190 : ON PETITION
Filed: July 15, 2003 :
Attorney Docket No.: BRI/024 :

This is a decision on the petition, filed February 9, 2006, under 37 CFR 1.313(c)(2) to withdraw the above-identified application from issue after payment of the issue fee.

The petition is **GRANTED**.

The above-identified application is withdrawn from issue for consideration of a submission under 37 CFR 1.114 (request for continued examination). See 37 CFR 1.313(c)(2).

Petitioner is advised that the issue fee paid on February 7, 2005, in the above-identified application cannot be refunded. If, however, the above-identified application is again allowed, petitioner may request that it be applied towards the issue fee required by the new Notice of Allowance. [1]

Telephone inquiries relating to this decision should be directed to the undersigned at (571) 272-3204.

The application is being referred to Technology Center AU 3641 for further processing of the request for continued examination under 37 CFR 1.114.

Sherry D. Brinkley
Petitions Examiner
Office of Petitions

[1]The request to apply the issue fee to the new Notice may be satisfied by completing and returning the new Issue Fee Transmittal Form PTOL-85(b), which includes the following language thereon: "Commissioner for Patents is requested to apply the Issue Fee and Publication Fee (if any) or re-apply any previously paid issue fee to the application identified above." Petitioner is advised that, whether a fee is indicated as being due or not, the Issue Fee Transmittal Form **must** be completed and timely submitted to avoid abandonment. Note the language in bold text on the first page of the Notice of Allowance and Fee(s) Due (PTOL-85).

UNITED STATES PATENT AND TRADEMARK OFFICE

COMMISSIONER FOR PATENTS
UNITED STATES PATENT AND TRADEMARK OFFICE
P.O. BOX 1450
ALEXANDRIA, VA 22313-1450
www.uspto.gov

MOLEX INCORPORATED
2222 WELLINGTON COURT
LISLE, IL 60532

COPY MAILED

FEB 0 2 2005

OFFICE OF PETITIONS

In re Application of :
Arvid Patel, et al. :
Application No. 10/620,229 : ON PETITION
Filed: July 15, 2003 :
Attorney Docket No. A3-290 US :

This is a decision on the petition, filed January 28, 2005, under 37 CFR 1.313(c)(2) to withdraw the above-identified application from issue after payment of the issue fee.

The petition is **GRANTED**.

The above-identified application is withdrawn from issue for consideration of a submission under 37 CFR 1.114 (request for continued examination). See 37 CFR 1.313(c)(2).

Petitioner is advised that the issue fee paid on January 18, 2005, in the above-identified application cannot be refunded. If, however, the above-identified application is again allowed, petitioner may request that it be applied towards the issue fee required by the new Notice of Allowance. [1]

Telephone inquiries relating to this decision should be directed to the undersigned at (571) 272-3204.

The application is being referred to Technology Center AU 2833 for further processing of the request for continued examination under 37 CFR 1.114.

Sherry D. Brinkley
Petitions Examiner
Office of Petitions
Office of the Deputy Commissioner
for Patent Examination Policy

[1]The request to apply the issue fee to the new Notice may be satisfied by completing and returning the new Issue Fee Transmittal Form PTOL-85(b), which includes the following language thereon: "Commissioner for Patents is requested to apply the Issue Fee and Publication Fee (if any) or re-apply any previously paid issue fee to the application identified above." Petitioner is advised that, whether a fee is indicated as being due or not, the Issue Fee Transmittal Form **must** be completed and timely submitted to avoid abandonment. Note the language in bold text on the first page of the Notice of Allowance and Fee(s) Due (PTOL-85).

UNITED STATES PATENT AND TRADEMARK OFFICE

Commissioner for Patents
United States Patent and Trademark Office
P.O. Box 1450
Alexandria, VA 22313-1450
www.uspto.gov

Paper No. 111904

Brian Roffe, Esq.
11 Sunrise Plaza, Suite 303
Valley Stream, NY 11580-6111

FEB - 8 2005

In re Application of:
Mark Dronge
Serial No.: 10/620,235
Filed: July 15, 2003

DECISION ON PETITION
TO MAKE SPECIAL

This is a decision on the petition under 37 C.F.R. § 1.102(c), filed September 2, 2003, to make the above-identified application special.

Petitioner requests that the above-identified application be made special under the accelerated examination procedure set forth in the Manual of Patent Examining Procedure (M.P.E.P.) § 708.02, Section IV: Applicant's Age.

A grantable petition to make special under 37 C.F.R. § 1.102, and in accordance with M.P.E.P. § 708.02, Section IV, must include evidence showing that the applicant is sixty five (65) years of age or more. No fee is required for this petition.

The petition includes a birth certificate from the inventor, Mark Dronge, showing that he is sixty-five (65) years of age or more.

Accordingly, the petition is GRANTED.

After allowance, this application will be given priority for printing. See M.P.E.P. § 1309.

Inquiries regarding this decision should be directed to Lissi Marquis at (571) 272-1596.

Lissi Marquis, Special Programs Examiner
Technology Center 2800
Semiconductors, Electrical and Optical
Systems and Components

UNITED STATES PATENT AND TRADEMARK OFFICE

COMMISSIONER FOR PATENTS
UNITED STATES PATENT AND TRADEMARK OFFICE
P.O. BOX 1450
ALEXANDRIA, VA 22313-1450
www.uspto.gov

JJGJr: 07-04

Paper No: __

AIR PRODUCTS AND CHEMICALS, INC.
PATENT DEPARTMENT
7201 HAMILTON BOULEVARD
ALLENTOWN PA 18195-1501

COPY MAILED
JUL 1 4 2004
OFFICE OF PETITIONS

In re Application of	:	
Bailey, et al.	:	
Application No. 10/620,237	:	ON PETITION
Filed: 15 July, 2003	:	
Attorney Docket No.06405 USA	:	

This is a decision on the petition filed on 7 June, 2004 (preceded by a reply on 14 November, 2003), under 37 C.F.R. §1.53, to obtain a filing date for the instant application.

The petition is **GRANTED**.

This application was deposited on 15 July, 2003.

On 14 October, 2003, the Office mailed a "Notice of Incomplete Nonprovisional Application" stating that no signed oath/declaration was present upon deposit and the drawing(s) required under 35 U.S.C. §113 (first sentence) were not present upon deposit, and as a result of the latter matter no filing date had been accorded to the instant application.

In response, Petitioner's office first submitted on 14 November, 2003, a fee and copy of the oath/declaration.

Thereafter, on 7 June, 2004, Petitioner submitted the instant petition with, *inter alia*, copies of: (a) what Petitioner contends is a true copy of the one sheet of drawings (Figs. 1 - 4), and (b) a copy of the the date-stamped ("07/15/03"--15 July, 2003) receipt card reflecting receipt by the Office of, *inter alia*:

* * *
Specification 17 Pages
Drawings 1 Sheets
* * *

Analysis

A review of the application papers reveals that the application in fact was filed and received in the Office on 15 July, 2003, and that a comparison of the date-stamped (15 July, 2003) copy of the receipt card filed by Petitioner and the contents of the file indicate that the file contains, *inter alia*, specification pages 1 - 17 (description, claims and abstract).

Because the return postcard receipt properly itemizes the contents of the application package in accordance with MPEP §503, the Office concludes that the one sheet of drawings (Fig. 1 - 4) was submitted on 15 July, 2003, and subsequently was misplaced in the Office.

Accordingly, the petition under 37 C.F.R. §1.53 is **granted**, and no petition fee has been charged.

The Notice mailed on 14 November, 2003, hereby is withdrawn as to the one sheet of drawings (Fig. 1 - 4).

This application is released to the Office of Initial Patent Examination for further processing with a filing date of 15 July, 2003, using:

1. specification pages 1 - 17 (description, claims and abstract), deposited on 15 July, 2003; and

2. One sheet of drawings (Figs. 1 - 4), deposited on 7 June, 2004; and

3. further with direction to OIPE to correct Office records to reflect that four 17 pages of specification (description, claims and abstract) and 1 sheet of drawings were present on filing on 15 July, 2003; and forward to Petitioner a copy of the corrected filing receipt reflecting a filing date of 15 July, 2003, reflecting therein that 17 pages of specification (description, claims and abstract) and one (1) sheet of drawings were present on filing.

Thereafter, the application will be considered by the examiner in due course.

Telephone inquiries concerning this decision may be directed to the undersigned at (703)305-9199.

John J. Gillon, Jr.
Senior Attorney
Office of Petitions

UNITED STATES PATENT AND TRADEMARK OFFICE

Commissioner for Patents
United States Patent and Trademark Office
P.O. Box 1450
Alexandria, VA 22313-1450
www.uspto.gov

ATTN: MCMR-JA (Ms. Elizabeth Arwine- PATENT ATTY)
U. S. Army Medical Research and Materiel Command
504 Scott Street
Fort Detrick MD 21702-5012

COPY MAILED
AUG 1 1 2008

In re Application of :
Ricky Ulrich et al. :
Application No. 10/620,242 : ON PETITION
Filed: July 15, 2003 :
Attorney Docket No. 003/267/SAP :

This is a decision on the petition under the unintentional provisions of 37 CFR 1.137(b), filed April 1, 2008, to revive the above-identified application.

The petition is **GRANTED**.

The application became abandoned for failure to timely file a reply within the meaning of 37 CFR 1.113 to the final Office action of March 13, 2007. The proposed reply required for consideration of a petition to revive must be a Notice of Appeal (and appeal fee required by 37 CFR 41.20(b)(2), an amendment that *prima facie* places the application in condition for allowance, a Request for Continued Examination and submission (37 CFR 1.114), or the filing of a continuing application under 37 CFR 1.53(b). See MPEP 711.03(c)(III)(A)(2). A three (3) month extension of time pursuant to the provisions of 37 CFR 1.136(a) were obtained. Accordingly, the date of abandonment of this application is September 14, 2007.

The petition satisfies the requirements of 37 CFR 1.137(b) in that petitioner has supplied (1) the reply in the form of a Request for Continued Examination (RCE) and fee of $810.00, and the submission required by 37 CFR 1.114; (2) the petition fee of $1540.00; and (3) a proper statement of unintentional delay.

37 CFR 1.137(b)(3) requires a statement that "the entire delay in filing the required reply from the due date for the reply until the filing of a grantable petition pursuant to 37 CFR 1.137(b) was unintentional." Since the statement appearing in the petition varies from the language required by 37 CFR 1.137(b)(3), the statement is being construed as the required statement. Petitioner must notify the Office if this is **not** a correct reading of the statement appearing in the petition.

Telephone inquiries concerning this decision should be directed to JoAnne Burke at (571) 272-4584.

This application is being referred to Technology Center AU 1645 for processing of the RCE and for appropriate action by the Examiner in the normal course of business on the amendment submitted in accordance with 37 CFR 1.114.

Irvin Dingle
Petitions Examiner
Office of Petitions

UNITED STATES PATENT AND TRADEMARK OFFICE

COMMISSIONER OF PATENTS

March 10, 2005

Jeffrey B. Haendler
Klarquist Sparkman
One World Trade Center, Suite 1600
121 S. W. Salmon St.
Portland, OR 97204

In re Application of:
Keefer, et al
Serial No: 10/620,262 On Petition
Filing Date: July 14, 2003
For: **MODULAR PRESSURE SWING ADSORPTION APPARATUS**

In response to the petition received September 20, 2004, to withdraw the holding of abandonment in the above application.

The petition is Granted.

The above-identified application became abandoned for failure to reply with the meaning of 37 C.D.R 1.113 in a timely manner to the Notice to File Missing Parts of Nonprovisional Application mailed October 15, 2003. Which set forth a shortened statutory period for reply of two months. Accordingly, the above-identified application became abandoned December 16, 2003.

The evidence submitted is sufficient to establish that the petitioners never received the Notice to File Missing Parts of Nonprovisional Application mailed October 15, 2003.

The application will be completed with the documents received on September 20, 2004 and released to Technology Center 3744. The replacement-drawing requirement has been removed.

The office regrets any inconvenience this may have caused the client.

Telephone inquiries concerning this application may be directed to Doshie E. Day (703) 308-3640.

Doshie E. Day
Program Management Assistant
Office of Initial Patent Examination

SPE RESPONSE FOR CERTIFICATE OF CORRECTION

Paper No.: _____

DATE : December 7, 2006

TO SPE OF : ART UNIT 1712

SUBJECT : Request for Certificate of Correction for Appl. No.: 10/620268 patent No.: 7,128,576

Please respond to this request for a certificate of correction within 7 days.

Please review the requested changes/corrections as shown in the **COCIN** document(s) in the IFW application image. No new matter should be introduced, nor should the scope or meaning of the claims be changed.

Please complete the response (see below) and forward the completed response to scanning using document code **COCX**.

Magdalene Talley

Certificates of Correction Branch

703-308-9390 ext. 116

Thank You For Your Assistance

The request for issuing the above-identified correction(s) is hereby:

Note your decision on the appropriate box.

- ☒ **Approved** — **All** changes apply.
- ☐ **Approved in Part** — Specify below which changes **do not** apply.
- ☐ **Denied** — State the reasons for denial below.

Comments: _____

RANDY GULAKOWSKI
SUPERVISORY PATENT EXAMINER
TECHNOLOGY CENTER 1700

SPE **Art Unit** 1796

UNITED STATES PATENT AND TRADEMARK OFFICE

COMMISSIONER FOR PATENTS
UNITED STATES PATENT AND TRADEMARK OFFICE
P.O. BOX 1450
ALEXANDRIA, VA 22313-1450
WWW.USPTO.GOV

Paper No. None

KING & SPALDING
45th Floor
191 Peachtree Street, N.E.
Atlanta GA 30303

COPY MAILED
APR 0 5 2004
OFFICE OF PETITIONS

In re Application of
Douglas A. Collins et al.
Application No. 10/620,273
Deposited: July 15, 2003
Attorney Docket No. 07959.105018 DIV
Title: RADIONUCLIDE LABELING OF VITAMIN B12 AND COENZYMES THEREOF

DECISION ON PETITION
UNDER 37 C.F.R. §1.182

BACKGROUND

This is a decision on the "Petition to Accord Filing Date (petition)," and the "Response to Notice of Incomplete Nonprovisional Application (response)," concurrently filed February 3, 2004, which is properly treated as a petition under 37 C.F.R. §1.182, requesting that the above-identified application be accorded a filing date of July 15, 2003, with Figures 1 and 2 (one and two) as part of the original disclosure of the application.

The application was deposited July 15, 2003. However, on December 3, 2003, the Office of Initial Patent Examination (OIPE) mailed a notice stating that the application had NOT been accorded a filing date, and advising applicants that the application appeared to have been deposited without drawings, and that a filing date would be accorded upon the depositing of drawings. The Notice further indicated that a newly executed oath or declaration would be required.

With the instant petition, Petitioner has submitted a copy of Figures 1 and 2 (one and two) and the petition fee. Petitioner has not submitted a newly executed oath or declaration.

With the petition, Petitioner sets forth that a Preliminary Amendment was included on filing which indicates that the instant application is a divisional of 09/626,213 (which issued as 6,613,305 on September 2, 2003), and that the entire disclosure of which was incorporated by

reference[1, 2]. Petitioner concludes that Figures 1 and 2 (one and two) were constructively included on filing, through incorporation by reference.

THE RELEVANT SECTION OF THE MPEP

MPEP 201.06(c) sets forth:

INCORPORATION BY REFERENCE

A. Application NOT Entitled to a Filing Date

Material needed to accord an application a filing date may not be incorporated by reference. Therefore, if a continuation or divisional application as originally filed incorporates by reference material omitted from the application papers, which is needed to accord the application a filing date, the application will not be entitled to a filing date. A petition under 37 CFR 1.182 and the required petition fee, including an amendment submitting the necessary omitted material, requesting that the necessary omitted material contained in the prior application and submitted in the amendment, be included in the continuation or divisional application based upon the incorporation by reference statement, is required in order to accord the application a filing date as of the date of deposit of the continuation or divisional application. An amendment submitting the omitted material and relying upon the incorporation by reference will not be entered in the continuation or divisional application unless a decision granting the petition states that the application is accorded a filing date and that the amendment will be entered.

ANALYSIS

The drawings in question were required to secure a filing date. As such, they may not be incorporated by reference, pursuant to the portion of the MPEP reproduced immediately above. Petitioner properly submitted a petition under 37 C.F.R. §1.182, the required drawings, and the associated petition fee. However, Petitioner has not submitted an amendment requesting that the drawings be entered into the instant application.

Furthermore, Petitioner has not submitted a newly executed oath or declaration, as required by the Notice, and has set forth that such is not required as the drawings do not constitute new matter[3]. Unfortunately, a new oath or declaration will be required. Pursuant to MPEP §§608.02(h) and 608.04, the Examiner will eventually review these drawings to determine whether they constitute new matter, and if it is determined that they constitute new matter, they will not be entered. As such, it is not within the jurisdiction of the undersigned to determine whether the drawings constitute new mater, and a newly executed oath or declaration is required.

CONCLUSION

For these reasons, the petition under 37 CFR 1.53(b) is dismissed.

---

1 Response, page 1.

2 It is noted that this Preliminary Amendment has been located in the electronic file, and it does set forth both the continuity and the incorporation by reference.

3 Response, page 1.

Figures 1 and 2 (one and two), submitted with the instant petition, will not be entered.

Any renewed petition must be submitted within **TWO (2) MONTHS** from the mail date of this decision. Extensions of time under 37 CFR 1.136(a) are permitted. The renewed petition should include a cover letter entitled "Renewed Petition under 37 CFR 1.182."
The reply to this letter may be submitted by mail[4], hand-delivery[5], or facsimile[6].

The reply should display "Please deliver to Paul Shanoski, c/o Office of Petitions" in a prominent manner. The Petitioner may wish to consider telephoning the undersigned at the number provided below to confirm that the documents were delivered to the undersigned. Please note that the delivery process within the PTO can take as much as three weeks.

The application file will be retained in the Office of Petitions for two (2) months.

Telephone inquiries regarding this decision should be directed to Attorney Paul Shanoski at (703) 305-0011.

Patricia Faison-Ball
for

Jay Lucas
Interim Supervisory Patent Examiner
Office of Petitions
United States Patent and Trademark Office

4 Mail Stop Petition, Commissioner for Patents, United States Patent and Trademark Office, P.O. Box 1450, Alexandria, VA, 22313-1450.
5 Customer Window, Mail Stop Petition, Crystal Plaza Two, Lobby, Room 1B03, Arlington, Virginia 22202.
6 (703) 872-9306 - please note this is a central facsimile number, and as such, there will be a delay in the delivery of the facsimile to the undersigned.

UNITED STATES PATENT AND TRADEMARK OFFICE

COMMISSIONER FOR PATENTS
UNITED STATES PATENT AND TRADEMARK OFFICE
P.O. BOX 1450
ALEXANDRIA, VA 22313-1450
WWW.USPTO.GOV

Paper No. None

KING & SPALDING
45th Floor
191 Peachtree Street, N.E.
Atlanta GA 30303

COPY MAILED

NOV 0 5 2004

OFFICE OF PETITIONS

In re Application of
Douglas A. Collins et al.
Application No. 10/620,273
Deposited: July 15, 2003
Attorney Docket No. 07959.105018 DIV
Title: RADIONUCLIDE LABELING OF VITAMIN B12 AND COENZYMES THEREOF

DECISION ON RENEWED PETITION UNDER 37 C.F.R. §1.182

BACKGROUND

This is a decision on the renewed petition under 37 C.F.R. §1.182, requesting that the above-identified application be accorded a filing date of July 15, 2003, with Figures 1 and 2 as part of the original disclosure of the application.

The application was deposited July 15, 2003. However, on December 3, 2003, the Office of Initial Patent Examination (OIPE) mailed a notice stating that the application had NOT been accorded a filing date, and advising applicants that the application appeared to have been deposited without drawings, and that a filing date would be accorded upon the depositing of drawings.

With the original petition, received on February 3, 2004, Petitioner submitted copies of Figures 1 and 2, along with the petition fee and an assertion that a Preliminary Amendment was included on filing which indicates that the instant application is a divisional of 09/626,213 (which issued as 6,613,305 on September 2, 2003), and that the entire disclosure of which was incorporated by reference[1,2]. Petitioner concluded that Figures 1 and 2 were constructively included on filing, through incorporation by reference.

1 Response, page 1.
2 It is noted that this Preliminary Amendment has been located in the electronic file, and it does set forth both the continuity and the incorporation by reference.

The original petition was dismissed via the mailing of a decision on April 5, 2004. The decision set forth:

The drawings in question were required to secure a filing date. As such, they may not be incorporated by reference, pursuant to the portion of the MPEP reproduced immediately above [MPEP 201.06(c)]. Petitioner properly submitted a petition under 37 C.F.R. §1.182, the required drawings, and the associated petition fee. However, Petitioner has not submitted an amendment requesting that the drawings be entered into the instant application.

Furthermore, Petitioner has not submitted a newly executed oath or declaration, as required by the Notice, and has set forth that such is not required as the drawings do not constitute new matter[3]. Unfortunately, a new oath or declaration will be required. Pursuant to MPEP §§608.02(h) and 608.04, the Examiner will eventually review these drawings to determine whether they constitute new matter, and if it is determined that they constitute new matter, they will not be entered. As such, it is not within the jurisdiction of the undersigned to determine whether the drawings constitute new matter, and a newly executed oath or declaration is required.

ANALYSIS

With the renewed petition, Petitioner has included an amendment which requests the entry of the drawings into the present application, along with a newly executed declaration, a three-month extension of time, and a petition fee for the renewed petition. Since there is no fee associated with the filing of a renewed petition, the petition fee has been refunded to Petitioner's Deposit Account.

CONCLUSION

As the previously indicated deficiencies have been corrected, the petition is GRANTED.

The application will be forwarded to Technology Center 1600 for further processing of the amendment filed concurrently with the renewed petition. The amendment will be reviewed by the examiner for new matter[4]. The amendment is not new matter if the substance was a part of the disclosure of the prior application

The general phone number for the Office of Petitions which should be used for status requests is (571) 272-3282. Telephone inquiries regarding *this decision* should be directed to the undersigned at (571) 272-3225.

Paul Shanoski
Senior Attorney
Office of Petitions
United States Patent and Trademark Office

3 Response, page 1.
4 See MPEP 608.02(h) and 608.04.

UNITED STATES PATENT AND TRADEMARK OFFICE

Commissioner for Patents
United States Patent and Trademark Office
P.O. Box 1450
Alexandria, VA 22313-1450
www.uspto.gov

PILLSBURY WINTHROP LLP
2550 HANOVER STREET
PALO ALTO, CA 94304

COPY MAILED

DEC 0 6 2004

OFFICE OF PETITIONS

In re Application of :
James D. Pylant, et al. :
Application No. 10/620,282 :
Filed: July 14, 2003 :
Attorney Docket No. 067810/0303800 PI-015 :

ON PETITION

This is a notice regarding your request for acceptance of a fee deficiency submission under 37 CFR 1.28. On September 1, 1998, the Court of Appeals for the Federal Circuit held that 37 CFR 1.28(c) is the sole provision governing the time for correction of the erroneous payment of the issue fee as a small entity. **See DH Technology v. Synergystex International, Inc. 154 F.3d 1333, 47 USPQ2d 1865 (Fed. Cir. Sept. 1, 1998).**

The Office no longer investigates or rejects original or reissue applications under 37 CFR 1.56. **1098 Off. Gaz. Pat. Office 502 (January 3, 1989)**. Therefore, nothing in this Notice is intended to imply that an investigation was done.

The file does not indicate a change of address has been submitted, although the address given on the petition differs from the address of record. If appropriate, a change of address should be filed in accordance with MPEP 601.03. A courtesy copy of this decision is being mailed to the address given on the petition; however, the Office will mail future correspondence solely to the address of record.

Your fee deficiency submission under 37 CFR 1.28 is hereby **ACCEPTED**.

Telephone inquiries concerning this decision should be directed to the undersigned at (571) 272-3229.

Retta Williams

Retta Williams
Petitions Examiner
Office of Petitions
Office of the Deputy Commissioner
for Patent Examination Policy

cc: David A. Jakopin
Pillsbury Winthrop LLP
2475 Hanover Street
Palo Alto, CA 94304

MAILED
FROM DIRECTORS OFFICE
APR 1 0 2006
TECHNOLOGY CENTER 3600

FROM DIRECTORS OFFICE
APR X 0 2006
TECHNOLOGY CENTER 3600

UNITED STATES PATENT AND TRADEMARK OFFICE

Commissioner for Patents
United States Patent and Trademark Office
P.O. Box 1450
Alexandria, VA 22313-1450
www.uspto.gov

Isabelle McAndrews
Peak International
44091 Nobel Drive
Fremont, CA 94538

In re application of	:	
James D. Pylant et al.	:	
Application No. 10/620282	:	**DECISION ON PETITION**
Filed: July 14, 2003	:	**TO VACATE FINAL**
For: BARE DIE TRAY CLIP	:	**RESTRICTION REQUIREMENT**

This is a decision on the petition, filed December 21, 2005, under 37 CFR §1.181, seeking review of the decision of the primary examiner. Petitioner requests vacating the species portion of the restriction/election requirement dated June 7, 2005 and to examine all of the apparatus claims.

The petition is **DENIED**.

A review of the file record reveals in an Office Action dated June 7, 2005, an election/restriction requirement was made between claims apparatus and method claims. The Petitioner elected the apparatus, without traverse. The election/restriction requirement further required an election between four species:

Species 1, represented by figures 5-7
Species 2, represented by figure 8
Species 3, represented by figure 9
Species 4, represented by figure 10.

The Petitioner elected species 1, with traverse, on July 20, 2005, and received an Office action on the merits of species 1 on December 1, 2005, which addressed Petitioner's arguments, and made the restriction/election requirement final and withdrew claims 5-7, 12, 13, 20-22, 24, 25 and 27.

The Petitioner states that all of the species are classified in Class 206, and that the Examiner could easily search all of the subclasses for that art that would be relevant to each species. Further, each of the species operate in the same manner, the species share common design features, and all of the species function as a unitary clip

Although Petitioner states the species overlap in design, function, and operation (arguments 2, 3, and 4), Petitioner stops short of stating that the species are not patentably distinct from each other. Therefore, both Examiner and Applicant consider that the species are patentably distinct. Where an application includes claims directed to different embodiments or species that could fall within the scope of a generic claim, restriction between the species may be proper if the species are independent or distinct (MPEP 806.04). A requirement for restriction is permissible if there is patentable distinction and thee would be a serious burden on the Examiner (MPEP 808.01 (a)).

With regard to burden on the Examiner, the Examiner must show by appropriate explanation what the burden entails. In this instance, the Examiner explained in response to the traverse that the original claims received an initial search, and that claimed invention at the time of the restriction contained limitations, which would require additional search beyond that which had already been conducted.

It is clear from the Office action dated December 1, 2005, the Examiner fully considered and addressed the arguments submitted by the applicants. It is also determined the restriction/election requirement between species is appropriate according to the MPEP and rules of practice.

SUMMARY: The Petition to Vacate the Restriction Requirement and examine all the claims present is **DENIED**.

Donald T. Hajec
Director
Patent Technology Center 3600
(571) 272-5150

OIPE IAP43
DEC 21 2005
PATENT & TRADEMARK OFFICE

IN THE UNITED STATES PATENT AND TRADEMARK OFFICE

Inventor: James D. Pylant et al.

Serial No.: 10/620,282

Filing Date: July 14, 2003

Title: **BARE DIE TRAY CLIP**

Group Art Unit: 3677

Examiner: Jack Lavinder

Attorney Docket: PI-015

Commissioner for Patents
P.O. Box 1450
Alexandria, VA 22313

PETITION TRAVERSING ELECTION OF SPECIES REQUIREMENT UNDER 37 CFR 1.477

Applicants hereby request the Technology Center Director to overturn the Restriction Requirement made final by the Examiner in the above-identified application on December 1, 2005. The Commissioner is authorized to charge the Petition Fee of $130 to Deposit Account 50-2991.

On June 7, 2005 the Examiner issued a restriction requirement between the apparatus and method claims. Applicants elected to prosecute the apparatus claims without traverse. Concurrently, the Examiner issued an Election of Species Requirement on the Apparatus claims: Claims 1- 13, 16 -22, 24, 25, and

12/22/2005 SDENBOB1 00000042 502991 10620282
02 FC:1464 130.00 DA

27 -33. In the Office Action of December 1, 2005, the Examiner identified the following four different species:

1) Species #1: Figures 5 -7. Figures 5 and 7 are reproduced below.

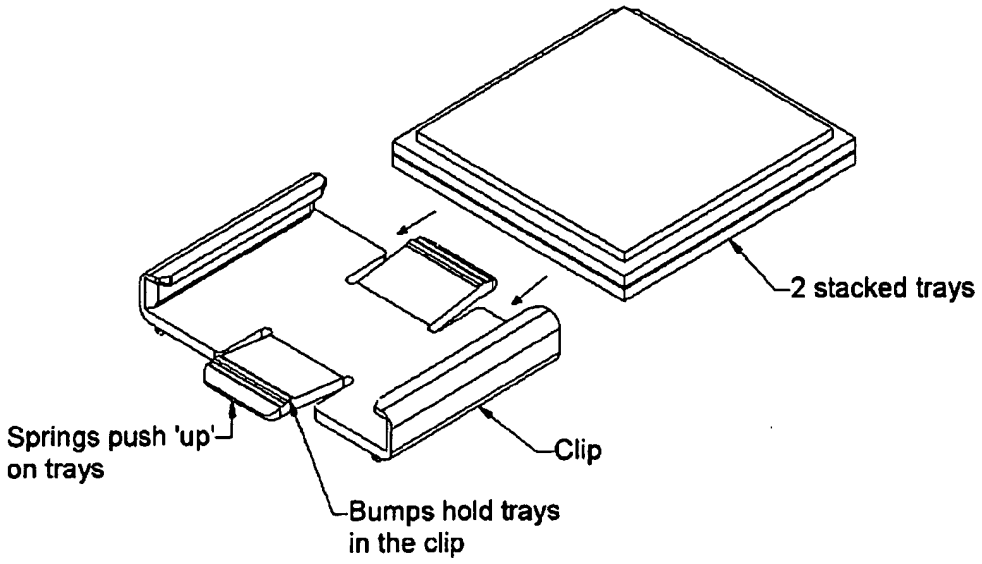

Figure 5 is shown above.

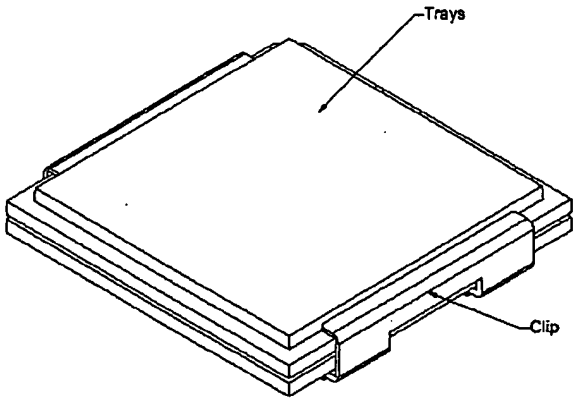

Figure 7

2) Species #2: Figure 8, shown in the Appendix;

2) Species #3: Figure 9, shown in the Appendix; and

3) Species #4: Figure 10, which is reproduced below.

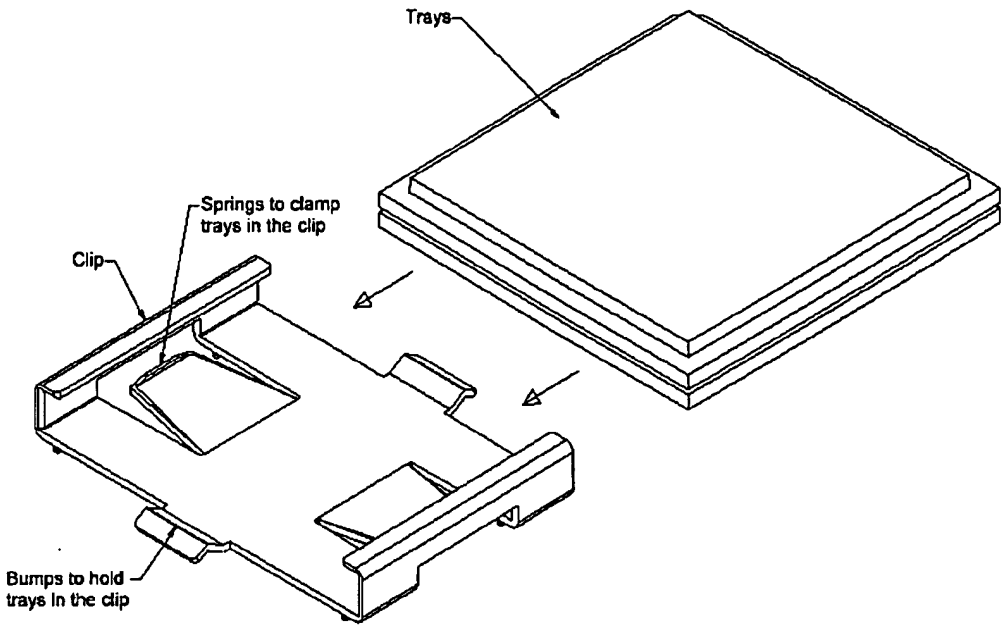

Applicants traversed and requested reconsideration of this Election of Species Requirement in the Amendment filed on September 9, 2005.

In the Office Action dated December 1, 2005, the Examiner made the Election of Species Requirement final. The Examiner stated "there is a considerable burden on the examiner to search all of the claimed species".

Applicants request the Director to withdraw the Election of Species Requirement for the reasons set forth below.

First, all of the species are classified in Class 206. The Examiner could easily search the same subclasses for art that would be relevant to each species.

Second, each of Species #1 - #4 operates in similar manner by using pressure members to apply pressure to a portion of the perimeter of a tray. In Fig. 1, pressure members 68, 70 apply an upward force to a portion of the perimeter of the tray. In Fig. 8, pressure member 78 applies the upward force to a portion of the perimeter of the tray. In Fig. 9, the pressure member, 86, also applies an upward force to the tray. While in Fig. 10, pressure members 90, 92 apply an upward force to a portion of the perimeter of the tray.

Third, each of the apparatuses share common design features. For example, the channel in Species #1, 3, and 4 includes a slit between the base and a side of a pressure member.

Fourth, all of the Species function as a unitary clip to clamp together a stack of trays between protrusions and pressure members. An upward force relative to the base is applied by the pressure members to the stack in each species as well.

Since all of the apparatuses overlap in design, function and operation, it is submitted that requiring an Election of Species is improper. Moreover, since all of the claims are classified in the same class, it would be fairly easy for the Examiner to examine all of the apparatus claims together. Accordingly, the Director is requested to withdraw the Election of Species Requirement and permit the examination of all of the Apparatus claims together.

Respectfully submitted,

Isabelle R. McAndrews
Attorney for Applicants
Registration No. 34,998

OIPE IAP43
DEC 21 2005
PATENT & TRADEMARK OFFICE

APPENDIX

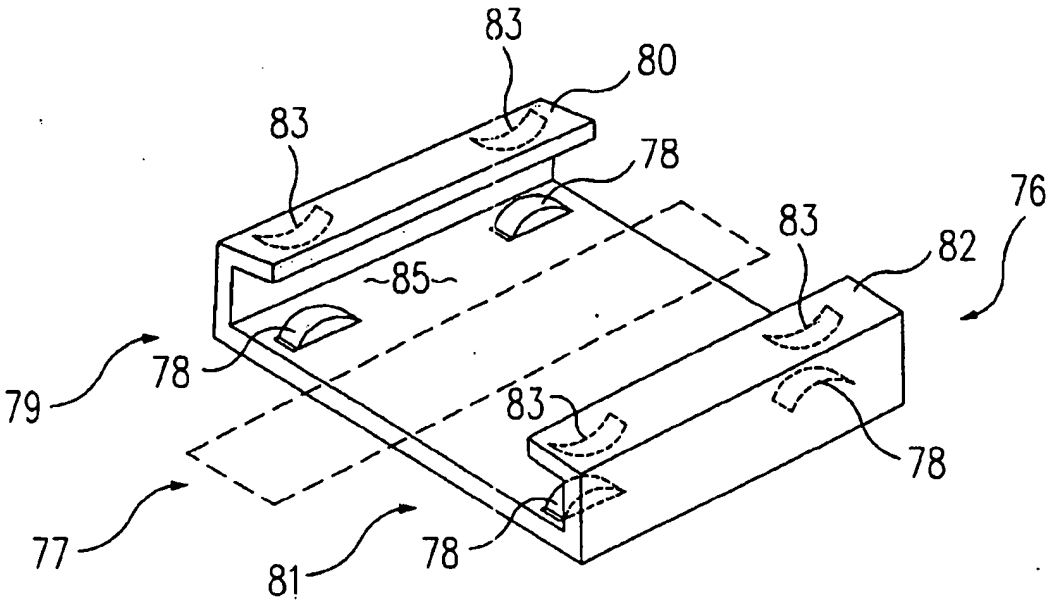

FIG. 8

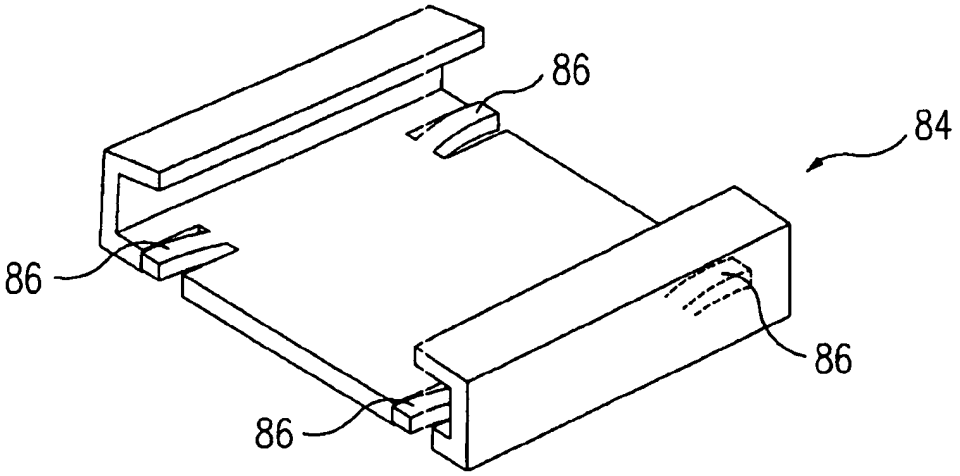

FIG. 9

UNITED STATES PATENT AND TRADEMARK OFFICE

Commissioner for Patents
United States Patent and Trademark Office
P.O. Box 1450
Alexandria, VA 22313-1450
www.uspto.gov

MAILED
FROM DIRECTORS OFFICE

MAY 01 2006

TECHNOLOGY CENTER 3600

Isabelle McAndrews
Peak International
38507 Cherry Street, Unit G
Newark, CA 94560-4743

In re application of
James D. Pylant et al.
Application No. 10/620282
Filed: July 14, 2003
For: BARE DIE TRAY CLIP

DECISION ON PETITION TO VACATE FINAL RESTRICTION REQUIREMENT

This is a decision on the petition, filed December 21, 2005, under 37 CFR §1.181, seeking review of the decision of the primary examiner. Petitioner requests vacating the species portion of the restriction/election requirement dated June 7, 2005 and to examine all of the apparatus claims.

The petition is **DENIED**.

A review of the file record reveals in an Office Action dated June 7, 2005, an election/restriction requirement was made between claims apparatus and method claims. The Petitioner elected the apparatus, without traverse. The election/restriction requirement further required an election between four species:

Species 1, represented by figures 5-7
Species 2, represented by figure 8
Species 3, represented by figure 9
Species 4, represented by figure 10.

The Petitioner elected species 1, with traverse, on July 20, 2005, and received an Office action on the merits of species 1 on December 1, 2005, which addressed Petitioner's arguments, and made the restriction/election requirement final and withdrew claims 5-7, 12, 13, 20-22, 24, 25 and 27.

The Petitioner states that all of the species are classified in Class 206, and that the Examiner could easily search all of the subclasses for that art that would be relevant to each species. Further, each of the species operate in the same manner, the species share common design features, and all of the species function as a unitary clip

Although Petitioner states the species overlap in design, function, and operation (arguments 2, 3, and 4), Petitioner stops short of stating that the species are not patentably distinct from each other. Therefore, both Examiner and Applicant consider that the species are patentably distinct. Where an application includes claims directed to different embodiments or species that could fall within the scope of a generic claim, restriction between the species may be proper if the species are independent or distinct (MPEP 806.04). A requirement for restriction is permissible if there is patentable distinction and there would be a serious burden on the Examiner (MPEP 808.01 (a)).

With regard to burden on the Examiner, the Examiner must show by appropriate explanation what the burden entails. In this instance, the Examiner explained in response to the traverse that the original claims received an initial search, and that claimed invention at the time of the restriction contained limitations, which would require additional search beyond that which had already been conducted.

It is clear from the Office action dated December 1, 2005, the Examiner fully considered and addressed the arguments submitted by the applicants. It is also determined the restriction/election requirement between species is appropriate according to the MPEP and rules of practice.

SUMMARY: The Petition to Vacate the Restriction Requirement and examine all the claims present is **DENIED**.

Donald T. Hajec
Director
Patent Technology Center 3600
(571) 272-5150

js/snm: 4/6/06
SM

UNITED STATES PATENT AND TRADEMARK OFFICE

Commissioner for Patents
United States Patent and Trademark Office
P.O. Box 1450
Alexandria, VA 22313-1450
www.uspto.gov

FOLEY & LARDNER LLP
150 EAST GILMAN STREET
P.O. BOX 1497
MADISON WI 53701-1497

MAILED

JUL 16 2009

OFFICE OF PETITIONS

In re Application of	:	
Patrick Sweeney	:	
Application No. 10/620287	:	ON REQUEST FOR
Filing or 371(c) Date: 07/15/2003	:	RECONSIDERATION OF
Attorney Docket Number: 029815-0102	:	PATENT TERM ADJUSTMENT

This is in response to the REQUEST FOR RECONSIDERATION OF PATENT TERM ADJUSTMENT UNDER 37 C.F.R. 1.705, filed May 22, 2009. This matter is being treated under 37 CFR 1.705(b). Applicant submits that the correct patent term adjustment to be indicated on the patent is 1023 days, not 643 days as calculated by the Office as of the mailing of the initial determination of patent term adjustment. Applicant requests this correction solely on the basis that the Office will take in excess of three years to issue this patent.

As the instant application for patent term adjustment requests reconsideration of the patent term adjustment as it relates to the Office's failure to issue the patent within 3 years of the filing date, the application for patent term adjustment under 37 CFR 1.705(b) is **DISMISSED as PREMATURE**.

Knowledge of the actual date the patent issues is required to calculate the amount, if any, of additional patent term patentee is entitled to for Office failure to issue the patent within 3 years. See § 1.702(b). (This is true even where a request for continued examination (RCE) was filed). The computer will not undertake the § 1.702(b) calculation until the actual date of issuance of the patent has been determined. Likewise, the computer will not calculate any further Office delay under § 1.702(a)(4) or applicant delay under § 1.704(c)(10) until the actual date of issuance of the patent has been determined. As such, the Office is unable to make a determination on the correctness of the patent term adjustment until the patent has issued.

Requesting reconsideration of the patent term adjustment to be indicated on the patent under 37 CFR 1.705(b) based on the initial determination of patent term adjustment and a projected issuance date of the patent (or even the filing date of the request for continued examination) is premature. Accordingly, it is appropriate to dismiss as premature such a request.

Rather than file a request for reconsideration of patent term adjustment under 37 CFR 1.705(b) contesting the 37 CFR 1.702(b) calculation at the time of the mailing of the notice of allowance, applicant is advised that they may wait until the time of the issuance of the patent and file a request for reconsideration of the patent term adjustment pursuant to 37 CFR 1.705(d). As the USPTO does not calculate the amount of time earned pursuant to 37 CFR 1.702(b) until the time of the issuance of the patent, the Office will consider any request for reconsideration of the patent term adjustment due to an error in the calculation of 37 CFR 1.702(b) to be timely if the request for reconsideration is filed within two months of the issuance of the patent. However, as to all other bases for contesting the initial determination of patent term adjustment received with the notice of allowance, applicant must timely file an application for patent term adjustment prior to the payment of the issue fee[1].

The Office acknowledges submission of the $200.00 fee set forth in 37 CFR 1.18(e) for consideration of the application for patent term adjustment under 37 CFR 1.705(b).

Any request for reconsideration of the patent term adjustment indicated on the patent must be timely filed within 2 months after issuance pursuant to 37 CFR 1.705(d) and must include payment of the required fee under 37 CFR 1.18(e).

The Office of Data Management has been advised of this decision. This application is being referred to the Office of Data Management for issuance of the patent.

Telephone inquiries specific to this decision should be directed to Attorney Derek Woods at (571) 272-3232.

Alesia Brown
Senior Petitions Attorney
Office of Petitions
Office of the Deputy Commissioner
for Patent Examination Policy

---

[1] For example, if applicant disputes both the calculation of patent term adjustment under 37 CFR 1.702(a)(1) for Office failure to mail a first Office action or notice of allowance not later than fourteen months after the date on which the application was filed and under 37 CFR 1.702(b) for Office failure to issue a patent within three years of the actual filing date of the application, then applicant must still timely file an application for patent term adjustment prior to the payment of the issue fee to contest the calculation of Office delay in issuing a first Office action or notice of allowance. See 37 CFR 1.705(b) and 35 U.S.C. 154(b)(3)(B). A dispute as to the calculation of the §1.702(a)(1) period raised on request for reconsideration of patent term adjustment under 37 CFR 1.705(d) will be dismissed as untimely filed.

UNITED STATES PATENT AND TRADEMARK OFFICE

Commissioner for Patents
United States Patent and Trademark Office
P.O. Box 1450
Alexandria, VA 22313-1450
www.uspto.gov

FOLEY & LARDNER LLP
150 EAST GILMAN STREET
P.O. BOX 1497
MADISON WI 53701-1497

MAILED
MAR 2 9 2010
OFFICE OF PETITIONS

In re Patent No. 7,575,572	:	
Patrick J. Sweeney	:	DECISION ON REQUEST
Issue Date: 08/18/2009	:	FOR RECONSIDERATION OF
Application No. 10/620287	:	PATENT TERM ADJUSTMENT
Filing or 371(c) Date: 07/15/2003	:	and
Attorney Docket No.	:	NOTICE OF INTENT TO ISSUE
029815-0102	:	CERTIFICAE OF CORRECTION

This is a decision on the petition filed on October 16, 2009, which is being treated as a petition under 37 CFR 1.705(d), requesting that the patent term adjustment indicated on the above-identified patent be corrected to indicate that the term of the above-identified patent is extended or adjusted by one thousand twenty-three (1023) days.

The petition to correct the patent term adjustment indicated on the above-identified patent to indicate that the term of the above-identified patent is extended or adjusted by one thousand twenty-three (1023) days is **GRANTED to the extent indicated herein**.

As the period from the filing date of the request for continued examination (RCE) to the issue date of the patent is not included in the "B" delay period, the over three year period begins on July 16, 2006, and ends on September 25, 2007, the day before the RCE was filed, and is 437 days not 438 days. See, 35 U.S.C. 154(b)(1)(B)(i). As such, the patent term adjustment is 1022, not 1023 days.

The Office will *sua sponte* issue a certificate of correction. Pursuant to 37 CFR 1.322, the Office will not issue a certificate of correction without first providing assignee or patentee an opportunity to be heard. Accordingly, patentees are given **one (1) month or thirty (30) days**, whichever is longer, from the mail date of this decision to respond. No extensions of time will be granted under § 1.136.

whichever is longer, from the mail date of this decision to respond. No extensions of time will be granted under § 1.136.

The Office acknowledges submission of the $200.00 fee set forth in 37 CFR 1.18(e). No additional fees are required.

The application file does not indicate a change of address has been filed in this case, although the address given on the petition differs from the address of record. A change of address should be filed in this case in accordance with MPEP 601.03. A courtesy copy of this decision is being mailed to the address noted on the petition. However, until otherwise instructed, all future correspondence regarding this application will be mailed solely to the address of record.

The application is being forwarded to the Certificates of Branch for issuance of a certificate of correction. The Office will issue a certificate of correction indicating that the term of the above-identified patent is extended or adjusted by **one thousand twenty-three (1022) days**.

Telephone inquiries specific to this matter should be directed to Attorney Derek Woods, at (571) 272-3232.

Anthony Knight
Supervisor
Office of Petitions

Enclosure: Copy of DRAFT Certificate of Correction

CC: FOLEY & LARDNER LLP
777 EAST WISCONSIN AVENUE
MILWAUKEE, WI 53202-5306

UNITED STATES PATENT AND TRADEMARK OFFICE

CERTIFICATE OF CORRECTION

PATENT : 7,575,572 B2

DATED : **August 18, 2009**

INVENTOR(S) : Sweeney

It is certified that error appears in the above-identified patent and that said Letters Patent is hereby corrected as shown below:

On the cover page,

[*] Notice: Subject to any disclaimer, the term of this patent is extended or adjusted under 35 USC 154(b) by 643 days.

Delete the phrase "by 643 days" and insert – by 1022 days--

UNITED STATES PATENT AND TRADEMARK OFFICE

Commissioner for Patents
United States Patent and Trademark Office
P.O. Box 1450
Alexandria, VA 22313-1450
www.uspto.gov

KNOBBE MARTENS OLSON & BEAR, LLP
2040 MAIN STREET, FOURTEENTH FLOOR
IRVINE, CA 92614

COPY MAILED

DEC 06 2005

OFFICE OF PETITIONS

ON PETITION

In re Application of :
Ke-Li Wu et al. :
Application No. 10/620,300 :
Filed: July 14, 2003 :
Attorney Docket No. CUH-0**07.01** :

This is a decision on the petition filed November 21, 2005, under 37 CFR 1.137(a)[1] and in the alternative, under 37 CFR 1.137(b)[2] to revive the above-identified application. The petition also seeks a waiver of the petition fee under 37 CFR 1.183.

The petition under 37 CFR 1.137(a) is **GRANTED**.
The petition under 37 CFR 1.137(b) is **DISMISSED** as involving moot issues.
The petition under 37 CFR 1.183 is **DISMISSED**.

This application became abandoned September 20, 2005 for failure to pay the issue

---

[1]A grantable petition under 37 CFR 1.137(a) must be accompanied by:

(1) the required reply, unless previously filed; In a nonprovisional application abandoned for failure to prosecute, the required reply may be met by the filing of a continuing application. In a nonprovisional utility or plant application filed on or after June 8, 1995, and abandoned for failure to prosecute, the required reply may also be met by the filing of a request for continued examination in compliance with § 1.114. In an application or patent, abandoned or lapsed for failure to pay the issue fee or any portion thereof, the required reply must be the payment of the issue fee or any outstanding balance thereof.
(2) the petition fee as set forth in 37 CFR 1.17(l);
(3) a showing to the satisfaction of the Commissioner that the entire delay in filing the required reply from the due date for the reply until the filing of a grantable petition pursuant to 37 CFR 1.137(a) was unavoidable; and
(4) any terminal disclaimer (and fee as set forth in 37 CFR 1.20(d)) required pursuant to 37 CFR 1.137©)).

[2]Effective December 1, 1997, the provisions of 37 CFR 1.137(b) now provide that where the delay in reply was unintentional, a petition may be filed to revive an abandoned application or a lapsed patent pursuant to 37 CFR 1.137(b). A grantable petition filed under the provisions of 37 CFR 1.137(b) must be accompanied by:

(1) the required reply, unless previously filed. In a nonprovisional application abandoned for failure to prosecute, the required reply may be met by the filing of a continuing application. In a nonprovisional application filed on or after June 8, 1995, and abandoned for failure to prosecute, the required reply may also be met by the filing of a request for continued examination in compliance with § 1.114. In an application or patent, abandoned or lapsed for failure to pay the issue fee or any portion thereof, the required reply must be the payment of the issue fee or any outstanding balance thereof. In an application abandoned for failure to pay the publication fee, the required reply must include payment of the publication fee.

(2) the petition fee as set forth in 37 CFR 1.17(m);

(3) a statement that the entire delay in filing the required reply from the due date for the reply until the filing of a grantable petition pursuant to 37 CFR 1.137(b) was unintentional. The Commissioner may required additional information where there is a question whether the delay was unintentional; and

(4) any terminal disclaimer (and fee as set forth in 37 CFR 1.20(d)) required pursuant to 37 CFR 1.137(c)).

fee by September 19, 2005, in response to the Notice of Allowance mailed June 17, 2005. The instant petition and this decision precede the mailing of a Notice of Abandonment.

Petitioner argues that a change of address was filed March 18, 2005 and that the Notice of Allowance, mailed June 17, 2005, was mailed to an incorrect address and thus not received. Petitioner explains that with a response to an office action mailed and received by the USPTO On March 21, 2005, petitioner included a revocation and power of attorney which therein included a change of address but that the change of address was not recorded with the USPTO and thus, the Notice of Allowance was not received by the new attorneys.

Decisions on reviving abandoned applications on the basis of "unavoidable" delay have adopted the reasonably prudent person standard in determining if the delay was unavoidable:

> The word 'unavoidable' . . . is applicable to ordinary human affairs, and requires no more or greater care or diligence than is generally used and observed by prudent and careful men in relation to their most important business. It permits them in the exercise of this care to rely upon the ordinary and trustworthy agencies of mail and telegraph, worthy and reliable employees, and such other means and instrumentalities as are usually employed in such important business. If unexpectedly, or through the unforeseen fault or imperfection of these agencies and instrumentalities, there occurs a failure, it may properly be said to be unavoidable, all other conditions of promptness in its rectification being present.[3]

Specifically, an application is "unavoidably" abandoned only where petitioner, or counsel for petitioner, takes all action necessary for a proper response to the outstanding Office action, but through the intervention of unforeseen circumstances, such as failure or mail, telegraph, telefacsimile, or the negligence of otherwise reliable employees, the response is not timely received in the Office.[4]

A review of the file reveals that the petitioner is correct, that a change of address was in fact filed on March 18, 2005 (certificate of mail date), prior to the mailing of the Notice

---

[3] In re Mattullath, 38 App. D.C. 497, 514-15 (1912)(quoting Ex parte Pratt, 1887 Dec. Comm'r Pat. 31, 32-33 (1887)); see also Winkler v. Ladd, 221 F. Supp. 550, 552, 138 USPQ 666, 167-68 (D.D.C. 1963), aff'd, 143 USPQ 172 (D.C. Cir. 1963); Ex parte Henrich, 1913 Dec. Comm'r Pat. 139, 141 (1913). In addition, decisions on revival are made on a "case-by-case basis, taking all the facts and circumstances into account." Smith v. Mossinghoff, 671 F.2d 533, 538, 213 USPQ 977, 982 (D.C. Cir. 1982). Finally, a petition cannot be granted where a petitioner has failed to meet his or her burden of establishing that the delay was "unavoidable." Haines v. Quigg, 673 F. Supp. 314, 316-17, 5 USPQ2d 1130, 1131-32 (N.D. Ind. 1987).

[4] Ex parte Pratt, 1887 Dec. Comm'r Pat. 31 (Comm'r Pat. 1887).

of Allowance. Furthermore, the Notice mailed June 17, 2005 was returned to the USPTO as undeliverable. It is noted therefore that an error on the part of the USPTO caused the office action mailed to not be received by the petitioner. Thus, petitioner's delay in paying the issue fee was unavoidable under the standard set out at 37 CFR 1.137(a).

In view thereof, it will not be necessary to treat the petition under the unintentional standard. However, with respect to the request to waive the petition fee, a petition fee is required for treatment of a petition to revive under either 37 CFR 1.137(a) or (b) and thus since relief under 37 CFR 1.137(a) was petitioned, cannot be waived.

The revocation, power of attorney and change of address have been corrected and this matter is being referred to the Publishing Division to be processed into a Patent.

Telephone inquiries concerning this matter may be directed to the undersigned Petitions Attorney at (571) 272-3212.

Patricia Faison-Ball

Patricia Faison-Ball
Senior Petitions Attorney
Office of Petitions

UNITED STATES PATENT AND TRADEMARK OFFICE

Commissioner for Patents
United States Patent and Trademark Office
P.O. Box 1450
Alexandria, VA 22313-1450
www.uspto.gov

KNOBBE MARTENS OLSON & BEAR LLP
2040 MAIN STREET
FOURTEENTH FLOOR
IRVINE CA 92614

MAILED
MAR 26 2010
OFFICE OF PETITIONS

In re Patent No. 7,064,633 :
Issued: June 20, 2006 :
Application No. 10/620,300 : ON PETITION
Filed: July 14, 2003 :
Attorney Docket No: **INSIG1.007AUS** :

This is a decision regarding your request for acceptance of a fee deficiency submission and loss of small entity status filed January 21, 2010. The request is being treated as a petition under 37 CFR 1.28.

On September 1, 1998, the Court of Appeals for the Federal Circuit held that 37 CFR 1.28(c) is the sole provision governing the time for correction of the erroneous payment of the issue fee as a small entity. See DH Technology v. Synergystex International, Inc.. 154 F.33d 1333, 47 USPQ2d 1865 (Fed. Cir. Sept. 1, 1998).

The Office no longer investigates or rejects original or reissue applications under 37 CFR 1.56. 1098 Off. Gaz. Pat. Office 502 (January 3, 1989). Therefore nothing in this Notice is intended to imply that an investigation was done.

Your fee deficiency submission under 37 CFR 1.28 is hereby accepted and the petition is **GRANTED**. Status as a small entity has also been removed.

Inquiries related to this communication should be directed to the Office of Petitions Staff at (571) 272-3282.

Patricia Faison-Ball

Patricia Faison-Ball
Senior Petitions Attorney
Office of Petitions

UNITED STATES PATENT AND TRADEMARK OFFICE

Commissioner for Patents
United States Patent and Trademark Office
P.O. Box 1450
Alexandria, VA 22313-1450
www.uspto.gov

James M. Deimen
Suite 300
320 N. Main Street
Ann Arbor MI 48104-1192

COPY MAILED

AUG 04 2005

OFFICE OF PETITIONS

In re Application of :
Gregory Steinriede :
Application No. 10/620,305 :
Filed: July 15, 2003 :
Attorney Docket No. 00-1261 :

ON PETITION

This is a decision on the petition under 37 CFR 1.137(b), filed July 22, 2005, to revive the above-identified application.

The petition is **GRANTED**.

This application became abandoned for failure to reply timely to the Notice of Allowance and Fee(s) Due mailed April 6, 2005, which set a three-month statutory period to respond. Accordingly, this application became abandoned on July 7, 2005. The petition preceded the mailing of a Notice of Abandonment.

Petitioner met the requirements to revive the above-identified application pursuant to 37 CFR 1.137(b). Petitioner submitted the required reply in the form of payment of the issue fee, paid the petition fee, and made the proper statement of unintentional delay.

This matter is being referred to the Office of Patent Publication.

Telephone inquiries concerning this matter may be directed to the undersigned at (571) 272-3211.

Christina Tartera Donnell

Christina Tartera Donnell
Senior Petitions Attorney
Office of Petitions

UNITED STATES PATENT AND TRADEMARK OFFICE

Commissioner for Patents
United States Patent and Trademark Office
P.O. Box 1450
Alexandria, VA 22313-1450
www.uspto.gov

INTELLECTUAL PROPERTY DEVELOPMENT
JACK IVAN J'MAEV
14175 TELEPHONE AVE.
SUITE L
CHINO CA 91710

COPY MAILED

JAN 04 2007

OFFICE OF PETITIONS

In re Application of
Herrera et al.
Application No. 10/620,307
Filed: July 15, 2003
Attorney Docket Number: HERH-002

Title of Invention: Method and Apparatus For Vehicle Disablement and Installation of System Thereof

ON PETITION

This is a decision on the petition filed November 25, 2006, under 37 CFR 1.137(b) to revive the above-identified application.

This application became abandoned for failure to timely submit the issue and publication fees, as required by the Notice of Allowance and Fee (s) Due which was mailed August 24, 2006. The Notice of Allowance and Fee (s) Due set a three (3) month statutory period for reply. Extensions of time were not available under the provisions of 37 CFR 1.136(a). Accordingly, this application became abandoned on November 25, 2006. This decision precedes the mailing of a Notice of Abandonment.

The requirements for a grantable petition under 37 CFR 1.137(b) have been met. This petition is hereby **Granted**.

This application is being forwarded to the Office of Patent Publication for processing into a patent.

Telephone inquiries should be directed to the undersigned at (571) 272-3215.

Charlema R. Grant

Charlema R. Grant
Petitions Attorney
Office of Petitions

UNITED STATES PATENT AND TRADEMARK OFFICE

Commissioner for Patents
United States Patent and Trademark Office
P.O. Box 1450
Alexandria, VA 22313-1450
www.uspto.gov

HELLER EHRMAN LLP
4350 LA JOLLA VILLAGE DRIVE
7TH FLOOR
SAN DIEGO, CA 92122

COPY MAILED

AUG 1 8 2008

In re Application of	:	
Edward W. **KNOWLTON**	:	
Application No. 10/620,311	:	DECISION ON PETITION
Filed: July 14, 2003	:	TO WITHDRAW
Attorney Docket No. 39254-0005	:	FROM RECORD
	:	

This is a decision on the Request to Withdraw as attorney or agent of record under 37 C.F.R. § 1.36(b), filed July 23, 2008.

The request is **APPROVED**.

A grantable request to withdraw as attorney/agent of record must be signed by every attorney/agent seeking to withdraw or contain a clear indication that one attorney is signing on behalf of another/others. A request to withdraw will not be approved unless at least 30 (thirty) days would remain between the date of approval and the later of the expiration date of a time to file a response or the expiration date of the maximum time period which can be extended under 37 C.F.R. § 1.136(a).

The request was signed by Leslie B. Overman behalf of all attorneys of record associated with Customer Number 25213.

All attorneys of record associated with Customer Number 25213 have been withdrawn.

Applicant is reminded that there is no attorney of record at this time.

The request to change the correspondence of record is not acceptable as the requested correspondence address is not that of: (1) the first named signing inventor; or (2) an intervening assignee of the entire interest under 37 C.F.R 3.71. All future communications from the Office will be directed to the inventor at the first copied address below until otherwise properly notified by the applicant.

Telephone inquiries concerning this decision should be directed to the undersigned at 571-272-6735.

Diane Goodwyn
Petitions Examiner
Office of Petitions

cc: EDWARD W. KNOWLTON
5476 BLACKHAWK DRIVE
DANVILLE, CA 94526

cc: GOODWIN PROCTER LLP
ATTN: PATENT ADMINISTRATOR
135 COMMONWEALTH DRIVE
MENLO PARK, CA 94025-1105

UNITED STATES PATENT AND TRADEMARK OFFICE

UNITED STATES DEPARTMENT OF COMMERCE
United States Patent and Trademark Office
Address: COMMISSIONER FOR PATENTS
P.O. Box 1450
Alexandria, Virginia 22313-1450
www.uspto.gov

KNOBBE MARTENS OLSON & BEAR LLP
2040 MAIN STREET
FOURTEENTH FLOOR
IRVINE, CA 92614

Mail Date: 04/20/2010

Applicant	: Michael P. Maher	: DECISION ON REQUEST FOR
Patent Number	: 7615356	: RECALCULATION of PATENT
Issue Date	: 11/10/2009	: TERM ADJUSTMENT IN VIEW
Appliction No	: 10/620,312	: OF WYETH AND NOTICE OF INTENT TO
Filed	: 07/14/2003	: ISSUE CERTIFICATE OF CORRECTION
		:

The Request for Recalculation is **GRANTED** to the extent indicated.

The patent term adjustment has been determined to be **1007** days. The USPTO will *sua sponte* issue a certificate of correction reflecting the amount of PTA days determined by the recalculation.

Prior to the issuance of the certificate of correction, the USPTO will afford patentee an opportunity to be heard and request reconsideration. Accordingly, patentee has **one month or thirty (30) days**, whichever is longer, to file a request for reconsideration of this patent term adjustment calculation. See 35 U.S.C. 154(b)(3)(B)(ii) and 37 CFR 1.322(a)(4). No extensions of time will be granted under 37 CFR 1.136.

Patentee should use document code PET.OP if electronically filing a request for reconsideration of this patent term adjustment calculation. The patentee must also include the information required by 37 CFR 1.705(b)(2) and the fee required by 37 CFR 1.18(e). If patentee does not file a timely request for reconsideration of this patent term adjustment calculation including the information required by 37 CFR 1.705(b)(2) and the fee required by 37 CFR 1.18(e), the USPTO will issue a certificate of correction reflecting the PTA determination noted above.

Patentee should be aware that in order to preserve the right to review in the United States District Court for the District of Columbia of the USPTO patent term adjustment determination, patentee must ensure that he or she also take the steps required under 35 U.S.C. 154(b)(4)(A) in a timely manner. Nothing in the request for recalculation should be construed as providing an alternative time frame for commencing a civil action under 35 U.S.C. 154(b)(4)(A).

Any questions concerning this decision should be directed to the Office of Patent Legal Administration at 571-272-7702.

UNITED STATES PATENT AND TRADEMARK OFFICE

UNITED STATES DEPARTMENT OF COMMERCE
United States Patent and Trademark Office
Address: COMMISSIONER FOR PATENTS
P.O. Box 1450
Alexandria, Virginia 22313-1450
www.uspto.gov

QUINE INTELLECTUAL PROPERTY LAW GROUP, P.C.
P O BOX 458
ALAMEDA, CA 94501

Mail Date: 05/19/2010

Applicant	: Moshe Rosenberg	: DECISION ON REQUEST FOR
Patent Number	: 7700127	: RECALCULATION of PATENT
Issue Date	: 04/20/2010	: TERM ADJUSTMENT IN VIEW
Application No	: 10/620,315	: OF WYETH
Filed	: 07/14/2003	:
		:

The Patentee's Request for Recalculation is **DISMISSED.**

This Request is deemed ineligible for consideration for one or more of the following reasons:

(A). The patent for which PTA recalculation is requested is either a design or reissue application or is a reexamination proceeding;

(B). The patent for which PTA recalculation is requested resulted from a utility or plant application filed under 35 USC 111(a) before May 29, 2000 and no CPA filed in the application on/after May 29, 2000;

(C). The patent for which PTA recalculation is requested resulted from an international application in which the international filing date was before May 29, 2000 and no CPA filed in the application on/after May 29, 2000;

(D). The patent for which PTA recalculation is requested issued on/after March 2, 2010;

(E). The Request for Recalculation was filed more than 180 days after the grant date of the patent and the request was not filed within two months of a dismissal of a request for reconsideration of the of the patent term under 37 CFR 1.705(d);

(F). The Request for Recalculation is not solely limited to USPTO pre-Wyeth interpretation of 35 U.S.C. 154(b)(2)(A);

or

(G). A civil action was filed pursuant to 35 U.S.C. 154(b)(4)(A)concerning the same patent at issue in this request.

Patentee may file a reply to this decision dismissing the Request for Recalculation. Patentee must file such reply within one month or thirty days, whichever is longer, of the mail date of the decision dismissing the Request for Recalculation. No fee is required if patentee is asserting in the reply that the dismissal for ineligibility is improper.

Patentee should use document code PET.OP if electronically filing a reply to this dismissal. If the USPTO finds that the request was improperly deemed ineligible, the USPTO will mail applicant a recalculation determination.

Patentee should be aware that in order to preserve the right to review in the United States District Court for the District of Columbia of the USPTO patent term adjustment determination, patentee must ensure that he or she also take the steps required under 35 U.S.C. 154(b)(4)(A). Nothing in the request for recalculation should be construed as providing an alternative time frame for commencing a civil action under 35 U.S.C. 154 (b)(4)(A).

Any questions concerning this decision should be directed to the Office of Patent Legal Administration at 571-272-7702.

SPE RESPONSE FOR CERTIFICATE OF CORRECTION

Paper No.:20090115

DATE : January 15, 2009

TO SPE OF : ART UNIT 3611

SUBJECT : Request for Certificate of Correction on Patent No.: 7,163,222

A response is requested with respect to the accompanying request for a certificate of correction.

Please complete this form and return with file, within **7** days to:
Certificates of Correction Branch - ST (South Tower) 9A22
Palm location **7590** - Tel. No. (703) 305-8309

With respect to the change(s) requested, correcting Office and/or Applicant's errors, should the patent read as shown in the certificate of correction? No new matter should be introduced, nor should the scope or meaning of the claims be changed.

Thank You For Your Assistance **Certificates of Correction Branch**

The request for issuing the above-identified correction(s) is hereby:

Note your decision on the appropriated box.

☒ **Approved** All changes apply.

☐ **Approved in Part** Specify below which changes **do not** apply.

☐ **Denied** State the reasons for denial below.

Comments:

/Paul Dickson/
SPE 3611

SPE RESPONSE FOR CERTIFICATE OF CORRECTION

Paper No.: X

DATE : January 30, 2008

TO SPE OF : ART UNIT 3671

SUBJECT : Request for Certificate of Correction for Appl. No.: 10/620,328 Patent No.: 7191584 B2

A response is requested with respect to a request for a certificate of correction.

With respect to the change(s) requested to correct Office and/or Applicant's errors, should the patent read as shown in the certificate of correction attached herewith or the COCIN document(s), in IFW images for the above-identified patented application? No new matter should be introduced, nor should the scope or meaning of the claims be changed.

If the response is for an IFW, within **7** days, please complete and forward the response, to the employee (named below) via scanning into application images, using document code **COCX**.

DO NOT SENT TO ATTORNEY

If the response is for a paper file wrapper, please complete the response and forward the response with the paper file wrapper, to the employee (named below), within **7** days, to:

Certificates of Correction Branch (CofC)
South Tower - 9A22
Palm Location 7580

You can fax the Directors/SPE response to 571-270-9990

LAMONTE NEWSOME

Certificates of Correction Branch

703-308-9390 ext. 112

Thank You For Your Assistance

The request for issuing the above-identified correction(s) is hereby:

Note your decision on the appropriate box.

☒ **Approved**	**All** changes apply.
☐ **Approved in Part**	Specify below which changes **do not** apply.
☐ **Denied**	State the reasons for denial below.

Comments: _____

Thomas B. Will
Supervisory Patent Examiner
Group 3600

3671

UNITED STATES PATENT AND TRADEMARK OFFICE

Commissioner for Patents
United States Patent and Trademark Office
P.O. Box 1450
Alexandria, VA 22313-1450
www.uspto.gov

MAILED

NOV 22 2006

DIRECTOR'S OFFICE
TECHNOLOGY CENTER 2600

TOWNSEND AND TOWNSEND AND CREW, LLP
TWO EMBARCADERO CENTER
EIGHTH FLOOR
SAN FRANCISCO CA 94111-3834

In re Application of
BROWN, STEPHEN F., et al.
Application No. 10/620,329
Filed: July 14, 2003
For: **METHOD AND APPARATUS FOR TRANSCODING BETWEEN HYBRID VIDEO CODEC BITSTREAMS**

DECISION ON PETITION
TO MAKE SPECIAL

This is a decision on the petition filed August 28, 2006 (with Certificate of Mailing dated August 23, 2006) under Manual of Patent Examination Procedure §708.02, VIII requesting accelerated examination.

The petition under Manual of Patent Examination Procedure §708.02, VIII, must:
(1) be filed prior to receiving any examination by the examiner,
(2) be accompanied by the required fee- $130,
(3) the claims should be directed to a single invention (if it is determined that the claims pertain to more than one invention, then applicant will have to make an election without traverse or forfeit accelerated examination status),
(4) state that a pre-examination search was made, and fully discuss the search method employed, such as classes and subclasses searched, publications, Chemical abstracts, patents, etc. A search made by a foreign patent office satisfies this requirement,
(5) be accompanied by a copy of each of the references most closely related to the subject matter encompassed by the claims if said references are not already of record,
(6) fully discuss the references, pointing out with the particularity required by 37 C.F.R. §1.111 (b) and (c), how the claimed subject matter is patentable over the references.

The petitioner meets all the above-listed requirements. Accordingly, the petition is **GRANTED**.

The application will retain its special status throughout its entire prosecution, including any appeal to the Board of Patent Appeals and Interferences, subject only to diligent prosecution by the applicant. The application file is being forwarded to the examiner for appropriate action in due course.

Kenneth A. Wieder
Special Program Examiner
Technology Center 2600
Communications

UNITED STATES PATENT AND TRADEMARK OFFICE

COMMISSIONER FOR PATENTS
UNITED STATES PATENT AND TRADEMARK OFFICE
P.O. BOX 1450
ALEXANDRIA, VA 22313-1450
www.uspto.gov

SUGHRUE MION, PLLC
2100 PENNSYLVANIA AVENUE, N.W.
WASHINGTON DC 20037

COPY MAILED

JAN 07 2004

OFFICE OF PETITIONS

In re Application of
Sumi et al.
Application No. 10/620,361
Filed: July 17, 2003
Attorney Docket No. Q76615

: DECISION GRANTING PETITION
: UNDER 37 CFR 1.53

This is a decision on the petition filed September 15, 2003, under 37 CFR 1.182, which is properly treated as a petition under 37 CFR 1.53(e)(2) requesting that the above-identified non provisional application be accepted as complete and accorded a filing date of July 17, 2003.

The petition is **granted**.

The instant application papers were deposited on July 17, 2003. However, on September 10, 2003, the Office of Initial Patent Examination (OIPE) sent a Notice stating that no filing date had been granted as these papers as filed appeared to lack the (one) drawing required by 35 U.S.C. § 113 that was referred to in the specification.

In reply, the instant petition was filed on September 15, 2003, accompanied by a copy of the one sheet of missing drawing. Petitioners assert, as evidenced by the accompanying copies of an itemized transmittal letter and an itemized postcard receipt, both bearing a USPTO date stamp dated July 17, 2003, that 1 (one) sheet of drawing was among the papers received in the USPTO on that date for the instant application. Since an adequately itemized receipt serves as *prima facie* evidence of USPTO receipt of an allegedly missing item, the petition is granted. The Notice of September 10, 2003 was mailed in error and is *vacated*. The USPTO regrets the error, and its misplacement of the drawing sheet. Since petitioners also filed a drawing on September 3, 2003, which facially appears to be of better quality, this will be used for further processing.

The $130 petition fee has been credited to counsel's deposit account No. 19-4880.

OIPE is instructed to further process this application as a complete provisional application with a filing date of July 17, 2003, and an indication that one drawing sheet was present on filing, using the one sheet of drawing filed September 3, 2003.

Telephone inquiries concerning this decision may be directed to the undersigned at (703) 305-1820. Telephone inquiries related to OIPE processing should be directed to the OIPE hotline at (703) 308-1202.

Brian Hearn
Petitions Examiner
Office of Petitions
Office of the Deputy Commissioner
for Patent Examination Policy

UNITED STATES PATENT AND TRADEMARK OFFICE

Commissioner for Patents
United States Patent and Trademark Office
P.O. Box 1450
Alexandria, VA 22313-1450
www.uspto.gov

SHUGRUE MION PLC
2100 PENNSYLVANIA AVENUE NW
WASHINGTON DC 20037

COPY MAILED

MAY 1 2 2004

OFFICE OF PETITIONS

In re Application of
Sumi et al.
Application No. 10/620,361
Filed: July 17, 2003
Attorney Docket No. Q76615

: ON PETITION

This is in reply to the communication filed January 22, 2004, requesting a correction of the decision mailed January 7, 2004.

The request is dismissed.

Petitioners contend that the decision of January 7, 2004, erred where it indicated that the USPTO would rely on the copy of the drawing filed September 3, 2003, to complete the application. Rather, petitioner asserts, the decision should have indicated that the USPTO was relying on the copy of the drawing filed with the petition on September 15, 2003.

Nevertheless there is a drawing figure that was filed September 3, 2003, along with both an assertion by applicants that such drawing was in compliance with 37 CFR 1.84 and a request that the examiner acknowledge receipt of that drawing. A comparison of the drawing filed September 3, 2003, with the drawing filed with the petition on September 15, 2003, does not appear to reveal any difference in content, but does reveal that the earlier drawing is of better execution and quality. As such, there is no apparent reason why the USPTO cannot choose to rely upon the September 3, 2003 drawing, since neither the copy of the September 3, 2003, drawing nor the copy of the September 15, 2003, drawing was actually present on filing. However, if applicant is aware of any reason(s) why the USPTO should not rely on the contents of the drawing filed September 3, 2003, but should instead rely upon the drawing filed with the petition on September 15,2003, he should promptly make his reason(s) of record and request reconsideration.

Telephone inquiries concerning this decision may be directed to the undersigned at (703) 305-1820.

Brian Hearn
Petitions Examiner
Office of Petitions
Office of the Deputy Commissioner
for Patent Examination Policy

OIPE JC177
MAY 1 9 2004
PATENT & TRADEMARK OFFICE

PATENT APPLICATION

IN THE UNITED STATES PATENT AND TRADEMARK OFFICE

In re application of

Hiroshi SUMI, et al.

Appln. No.: 10/620,361

Confirmation No.: Not Yet Assigned

Filed: July 17, 2003

Docket No: Q76615

Group Art Unit: Not Yet Assigned

Examiner: Not Yet Assigned

For: COPPER PASTE AND WIRING BOARD USING THE SAME

SECOND REQUEST FOR CORRECTION OF DECISION GRANTING PETITION DATED JANUARY 7, 2004

MAIL STOP PETITION
Commissioner for Patents
P.O. Box 1450
Alexandria, VA 22313-1450

Sir:

The Decision Granting Petition under 37 C.F.R. § 1.53 dated January 7, 2004 instructs OIPE to process this application as a complete provisional application. The record should be corrected to indicate that this application is non-provisional application.

Concerning the drawings, and in reference to the Reply dated May 12, 2004, a drawing was filed on September 15, 2003 in connection with the Petition under 37 C.F.R. § 1.182 to reinstate filing date of application. A second, better quality drawing was filed together with the Contingent Amendment dated October 2, 2003. No drawing was filed on September 3, 2003 as indicated in the Decision dated January 7, 2004 and Reply dated May 12, 2004. It is believed that the Office is referring to the drawing filed October 2, 2003. There is no difference in content of the drawings.

Respectfully submitted,

Abraham J. Rosner
Registration No. 33,276

SUGHRUE MION, PLLC
Telephone: (202) 293-7060
Facsimile: (202) 293-7860

WASHINGTON OFFICE
23373
CUSTOMER NUMBER

Date: May 19, 2004

UNITED STATES PATENT AND TRADEMARK OFFICE

COMMISSIONER FOR PATENTS
UNITED STATES PATENT AND TRADEMARK OFFICE
P.O. BOX 1450
ALEXANDRIA, VA 22313-1450
www.uspto.gov

Paper No.

ST. ONGE STEWARD JOHNSTON & REENS, LLC
986 BEDFORD STREET
STAMFORD, CT 06905-5619

COPY MAILED

MAR 0 9 2004

OFFICE OF PETITIONS

In re Application of
Igor Giterman
Application No. 10/620,393
Filed: July 16, 2003
Attorney Docket No. 02570-P0017A

DECISION ON PETITION

This is a decision on the "PETITION TO ACCORD FILING DATE TO ITEMS ALLEGED MISSING," filed January 29, 2004. Petitioner requests that the Office accord the filing date of July 16, 2003 to both the filing fee of $808 and the Declaration and Power of Attorney.

Application papers in the above-identified application were filed on July 16, 2003. However, on January 16, 2004, the Initial Patent Examination Division mailed applicant a NOTICE TO FILE MISSING PARTS OF NONPROVISIONAL APPLICATION, advising applicant that the statutory basic filing fee and the oath or declaration were missing.

In response, applicant filed the instant petition (and petition fee). Applicant contends that the basic filing fee and declaration were deposited on July 16, 2003 with the nonprovisional application papers. In support thereof, applicant submits a copy of their return postcard from the USPTO.

Although the evidence is persuasive[1], consideration of petitioner's argument is not necessary to decide this petition.

A review of the application-as-filed reveals that it included a check for $808 and an executed declaration. The declaration with a date of receipt of July 16, 2003 is present in the application. However, a review of the finance records for this application

---

[1] A postcard receipt which itemizes and properly identifies the items which are being filed serves as *prima facie* evidence of receipt in the Office of all items listed thereon on the date stamped thereon by the Office. See MPEP 503. A review of petitioners' postcard receipt reveals that: 1) it was date stamped as received in the USPTO on July 16, 2003, and the items filed therewith were assigned Application No. 10/620,393; 2) it specifically identifies the items being filed, including "Declaration and Power of Attorney" and "$808 Check" and 3) it lacks any annotation of non-receipt of any item denoted on the postcard. Thus, petitioners have shown that the items denoted, including the Declaration and the basic filing fee, were filed on July 16, 2003.

supports a conclusion that the check was misplaced in the Office. Alternatively, even if the check were not received in the Office, a review of the application-as-filed reveals that it included an authorization to charge fees required under § 1.16 and § 1.17 to a Deposit Account. Furthermore, a review of the finance records for the Deposit Account reveals that it had sufficient funds throughout the month of July to pay the basic filing fee.

Accordingly, the petition is **GRANTED**.

The Notice to File Missing Parts of Application mailed January 16, 2004 is hereby **VACATED**.

Given the basis for granting the petition, the petition fee is being refunded to Deposit Account No. 19-4516, as authorized.

This decision is being made of record in the application and pursuant to this decision, the Office of Initial Patent Examination (OIPE) is being requested to:

- vacate the Notice to File Missing Parts mailed January 16, 2004; and
- continue with completion of pre-examination processing.

Applicant will receive appropriate notifications regarding the fees owed, if any, and other information in due course from OIPE.

Telephone inquiries related to this decision should be directed to the undersigned at 703-305-0309.

Nancy Johnson
Senior Petitions Attorney
Office of Petitions

UNITED STATES PATENT AND TRADEMARK OFFICE

COMMISSIONER FOR PATENTS
UNITED STATES PATENT AND TRADEMARK OFFICE
P.O. BOX 1450
ALEXANDRIA, VA 22313-1450
www.uspto.gov

GALGANO & BURKE
SUITE 35
300 RABRO DRIVE
HAUPPAGE, NY 11788

COPY MAILED
AUG 12 2005
OFFICE OF PETITIONS

In re Application of :
Dong-Hwan Kim :
Application No. 10/620,399 :
Filed: July 16, 2003 : ON PETITION
Attorney Docket No. 1650-6 :

This is a decision on the Response to Notice of Incomplete Nonprovisional Application, filed April 28, 2005, requesting the above-identified application be accorded a filing date of July 16, 2003, including 1 sheet of drawing.

The application was filed on July 16, 2003. On February 28, 2005, the Office of Initial Patent Examination mailed a Notice of Incomplete Nonprovisional Application (hereinafter "Notice") stating that the application had NOT been accorded a filing date because the application had been deposited without drawings.

Applicant responds with the instant petition wherein Applicant avers that one sheet of drawing was originally filed with the application on July 16, 2003, and was received by this Office as evidenced by the return-receipt postcard. In support of this assertion, Applicant provides a copy of a return-receipt postcard acknowledging receipt of one sheet of drawing in the above-identified application by this Office on July 16, 2003.

A review of the return-receipt postcard reveals that Applicant is correct. The postcard acknowledges receipt of one sheet of drawings in the above-identified application by this Office on July 16, 2003.

"A postcard receipt which itemizes and properly identifies the papers which are being filed serves as prima facie evidence of receipt in the PTO of all items listed thereon by the PTO." MPEP § 503.

Accordingly, the petition is granted.

The copy of one sheet of drawings filed with the instant petition on April 28, 2005, will be used for examination purposes.

No fee has been charged and none is due.

The application will be returned to the Office of Initial Patent Examination for further processing with a filing date of July 16, 2005, and an indication that one (1) sheet of drawing was present on filing, using the one sheet of drawings filed with the instant petition on April 28, 2005.

Telephone inquiries concerning this matter should be directed to the undersigned at (571) 272-3232.

Derek L. Woods
Petitions Attorney
Office of Petitions

UNITED STATES PATENT AND TRADEMARK OFFICE

COMMISSIONER FOR PATENTS
UNITED STATES PATENT AND TRADEMARK OFFICE
P.O. BOX 1450
ALEXANDRIA, VA 22313-1450
WWW.USPTO.GOV

Paper No. None

WELLS ST. JOHN P.S.
601 W. FIRST AVENUE, SUITE 1300
SPOKANE WA 99201

COPY MAILED

APR 0 1 2004

OFFICE OF PETITIONS

In re Application of
Sujit Sharan et al.
Application No. 10/620,426
Filed: July 17, 2003
Attorney Docket No. MI22-2360
Title: PLASMA ENHANCED CHEMICAL VAPOR DEPOSITION METHODS AND SEMICONDUCTOR PROCESSING METHODS OF FORMING LAYERS AND SHALLOW TRENCH ISOLATION REGIONS

DECISION ON PETITION

This is a decision on the "Petition to Establish Prior Receipt in the P.T.O. of Items Considered as Omitted by the P.T.O. – Response to 'Notice of Omitted Items,'" filed December 22, 2003, requesting that the above-identified application be accorded a filing date of July 17, 2003, with Figures 7 and 8 (seven and eight) as part of the original disclosure of the application.

The application was filed on July 17, 2003. However, on October 20, 2003, the Office of Initial Patent Examination (OIPE) mailed a notice stating that the application had been accorded a filing date, and advising applicants that the application appeared to have been deposited without Figures 7 and 8 (seven and eight).

With the instant petition, Petitioner has submitted a copy of Figures 7 and 8 (seven and eight), the petition fee, and a copy of the postcard receipt.

Petitioner asserts that Figures 7 and 8 (seven and eight) were included on filing. Petitioner is mistaken, in that the drawings submitted on filing do not match those which were submitted with the instant petition. The drawings submitted on filing bear the attorney docket number MI22-2360, and consist of four sheets. The sheet labeled "1/4" contains Figures 1-2, "2/4" contains Figures 3-4, "3/4" contains Figure 5, and "4/4" contains Figure 6. Figures 7-8 do not appear. The drawings submitted with the instant petition consist of four sheets, the sheet labeled "1/4"

contains Figures 1-2, the sheet labeled "2/4" contains Figures 3-4, the sheet labeled "3/4" contains Figures 5-6, and the sheet labeled "4/4" contains Figures 7-8. It is noted that the original application papers include a substitute drawing request; however, no drawings are present in the application other than those bearing the attorney docket number MI22-2360. Clearly, Petitioner's assertion that "a review of the originally filed specification shows that 4 sheets of drawings were submitted, those drawings include 4 sheets, Figs. 1-8[1]" is incorrect.

Also, the postcard petitioner has submitted with the instant petition might have been able to establish that the application, as filed, included a copy of the prior application with four sheets of drawings and four sheets of substitute drawings, had it been better itemized[2]. However, the portions which list "true copy of parent application including 22 pages of specification, claims, and abstract plus title page; drawings and declaration" and "substitute drawing request & 4 sheets of formal drawings (Figs. 1-6)" are insufficient to establish that the four sheets of substitute drawings were received. The items mentioned on the postcard, namely the four sheets of drawings containing Figures 1-6 (one through six) were received. Figures 7-8 (seven and eight), which do not appear on the postcard, were not received on filing. As such, it would appear that the postcard accurately reflects what was received in the Office on filing, and Figures 7-8 (seven and eight) are not among that which was deposited on July 17, 2003.

Furthermore, Petitioners do not explicitly state that Figures 7 and 8 (seven and eight) were constructively included on filing, through incorporation by reference, although the notion is implied. The Utility Patent Application Transmittal sheet indicates that the entire disclosure of the parent application (09/652,534) is incorporated by reference.

The Office allows an applicant to rely upon an incorporation by reference of a parent application when a portion of the child application has been inadvertently omitted. It is noted that the application transmittal letter identifies this application as a continuation of prior application No. 09/652,534, and specifically incorporated by reference the disclosure of the prior application. Section 201.06(c) of the MPEP sets forth, in part:

an applicant may incorporate by reference the prior application by including, in the continuation or divisional application-as-filed, a statement that such specifically enumerated prior application or applications are "hereby incorporated herein by reference." The statement may appear in the specification or in the application transmittal letter. The incorporation by reference statement can only be relied upon to permit the entering of a portion of the prior application into the continuation or divisional application when the portion of the prior application has been inadvertently omitted from the submitted application papers in the continuation or divisional application. The inclusion of this incorporation by reference of the prior application(s) will permit an applicant to amend the continuation or divisional application to include any subject matter in such prior application(s), <u>without the need for</u>

1 Petition, page 1.

2 The postcard receipt will not serve as prima facie evidence of receipt of any item which is not adequately itemized on the postcard. For example, merely listing on the postcard "a complete application" or "patent application" will not serve as a proper receipt for each of the required components of an application (e.g., specification (including claims), drawings (if necessary), oath or declaration and the application filing fee) or missing portions (e.g., pages, sheets of drawings) of an application if one of the components or portion of a component is found to be missing by the USPTO. Each separate component should be specifically and properly itemized on the postcard. Furthermore, merely incorporating by reference in the postcard receipt, the items listed in a transmittal letter will not serve as prima facie evidence of receipt of those items.

a petition provided the continuation or divisional application is entitled to a filing date notwithstanding the incorporation by reference.

If petitioner desires for the examiner to consider the missing page which was not submitted as part of the original disclosure, then petitioner may submit that page via an amendment. Any such amendment will, of course, be reviewed by the examiner for new matter[3]. The amendment is not new matter if the substance was a part of the disclosure of the prior application.

For these reasons, the petition under 37 CFR 1.53(b) is dismissed.

Figures 7 and 8 (seven and eight), submitted with the instant petition, will not be entered. Should petitioner wish for the page to be entered, an amendment must be filed.

The original application papers will include only those application papers present on the date of deposit.

The petition fee of $130.00 will not be refunded, as this petition was not necessitated by any error on the part of the Office.

The Application is being returned to the Office of Initial Patent Examination for further processing with a filing date of July 17, 2003, using only the application papers filed on that date.
After the mailing of this decision, the application will be forwarded to the Office of Initial Patent Examination for further processing.

Telephone inquiries specific to this matter should be directed to Attorney Paul Shanoski at (703) 305-0011.

Nancy Johnson for

Jay Lucas
Interim Supervisory Petitions Examiner
Office of Petitions
United States Patent and Trademark Office

3 See MPEP 608.02(a).

Approved for use through 04/30/2009. OMB 0651-0016
U.S. Patent and Trademark Office: U.S. DEPARTMENT OF COMMERCE
Under the Paperwork Reduction Act of 1995, no persons are required to respond to a collection of information unless it displays valid OMB control number.

PETITION TO ACCEPT UNINTENTIONALLY DELAYED PAYMENT OF MAINTENANCE FEE IN AN EXPIRED PATENT (37 CFR 1.378(c))

Patent Number	Issue Date (YYYY-MM-DD)	Application Number	Filing Date (YYYY-MM-DD)	Docket Number (if applicable)
6,813,550	2004-11-02	10/620,440	2003-07-17	GOT 171

CAUTION: Maintenance fee (and surcharge, if any) payment must correctly identify: (1) the patent number and (2) the application number of the actual U.S. application leading to issuance of that patent to ensure the fee(s) is/are associated with the correct patent. 37 CFR 1.366(c) and (d).

SMALL ENTITY
☐ Patentee claims, or has previously claimed, small entity status. See 37 CFR 1.27.

LOSS OF ENTITLEMENT TO SMALL ENTITY STATUS
☐ Patentee is no longer entitled to small entity status. See 37 CFR 1.27(g)

NOT Small Entity		Small Entity	
Fee	Code	Fee	Code
◉ 3 ½ year	(1551)	○ 3 ½ year	(2551)
○ 7 ½ year	(1552)	○ 7 ½ year	(2552)
○ 11 ½ year	(1553)	○ 11 ½ year	(2553)

SURCHARGE
The surcharge required by 37 CFR 1.20(i)(2) (Fee Code 1558) must be paid as a condition of accepting unintentionally delayed payment of the maintenance fee.

MAINTENANCE FEE (37 CFR 1.20(e)-(g))
The appropriate maintenance fee must be submitted with this petition.

STATEMENT
THE UNDERSIGNED CERTIFIES THAT THE DELAY IN PAYMENT OF THE MAINTENANCE FEE TO THIS PATENT WAS UNINTENTIONAL

PETITIONER(S) REQUEST THAT THE DELAYED PAYMENT OF THE MAINTENANCE FEE BE ACCEPTED AND THE PATENT REINSTATED

THIS PORTION MUST BE COMPLETED BY THE SIGNATORY OR SIGNATORIES

37 CFR 1.378(d) states: "Any petition under this section must be signed by an attorney or agent registered to practice before the Patent and Trademark Office, or by the patentee, the assignee, or other party in interest."

I certify, in accordance with 37 CFR 1.4(d)(4) that I am

◉ An attorney or agent registered to practice before the Patent and Trademark Office

○ A sole patentee

○ A joint patentee; I certify that I am authorized to sign this submission on behalf of all the other patentees.

○ A joint patentee; all of whom are signing this e-petition

○ The assignee of record of the entire interest

Patent Practitioner			
A signature of the applicant or representative is required in accordance with 37 CFR 1.33 and 10.18. Please see 37 CFR 1.4(d) for the form of the signature			
Signature	/Robert H. Berdo, Jr./	Date (YYYY-MM-DD)	2008-11-17
Name	Robert H. Berdo, Jr.	Registration Number	38075

This collection of information is required by 37 CFR 1.378(c). The information is required to obtain or retain a benefit by the public which is to file (and by the USPTO to process) an application. Confidentiality is governed by 35 U.S.C. 122 and 37 CFR 1.11 and 1.14. This collection is estimated to take 1 hour to complete, including gathering, preparing, and submitting the completed application form to the USPTO. Time will vary depending upon the individual case. Any comments on the amount of time you require to complete this form and/ or suggestions for reducing this burden, should be sent to the Chief Information Officer, U.S. Patent and Trademark Office, U.S. Department of Commerce, P.O. Box 1450, Alexandria, VA 22313-1450. DO NOT SEND FEES OR COMPLETED FORMS TO THIS ADDRESS. **This form can only be used when in conjunction with EFS-Web. If this form is mailed to the USPTO, it may cause delays in reinstating the patent.**

Privacy Act Statement

The Privacy Act of 1974 (P.L. 93-579) requires that you be given certain information in connection with your submission of the attached form related to a patent application or patent. Accordingly, pursuant to the requirements of the Act, please be advised that: (1) the general authority for the collection of this information is 35 U.S.C. 2(b)(2); (2) furnishing of the information solicited is voluntary; and (3) the principal purpose for which the information is used by the U.S. Patent and Trademark Office is to process and/or examine your submission related to a patent application or patent. If you do not furnish the requested information, the U.S. Patent and Trademark Office may not be able to process and/or examine your submission, which may result in termination of proceedings or abandonment of the application or expiration of the patent.

The information provided by you in this form will be subject to the following routine uses:

1. The information on this form will be treated confidentially to the extent allowed under the Freedom of Information Act (5 U.S.C. 552) and the Privacy Act (5 U.S.C. 552a). Records from this system of records may be disclosed to the Department of Justice to determine whether the Freedom of Information Act requires disclosure of these record s.

2. A record from this system of records may be disclosed, as a routine use, in the course of presenting evidence to a court, magistrate, or administrative tribunal, including disclosures to opposing counsel in the course of settlement negotiations.

3. A record in this system of records may be disclosed, as a routine use, to a Member of Congress submitting a request involving an individual, to whom the record pertains, when the individual has requested assistance from the Member with respect to the subject matter of the record.

4. A record in this system of records may be disclosed, as a routine use, to a contractor of the Agency having need for the information in order to perform a contract. Recipients of information shall be required to comply with the requirements of the Privacy Act of 1974, as amended, pursuant to 5 U.S.C. 552a(m).

5. A record related to an International Application filed under the Patent Cooperation Treaty in this system of records may be disclosed, as a routine use, to the International Bureau of the World Intellectual Property Organization, pursuant to the Patent Cooperation Treaty.

6. A record in this system of records may be disclosed, as a routine use, to another federal agency for purposes of National Security review (35 U.S.C. 181) and for review pursuant to the Atomic Energy Act (42 U.S.C. 218(c)).

7. A record from this system of records may be disclosed, as a routine use, to the Administrator, General Services, or his/her designee, during an inspection of records conducted by GSA as part of that agency's responsibility to recommend improvements in records management practices and programs, under authority of 44 U.S.C. 2904 and 2906. Such disclosure shall be made in accordance with the GSA regulations governing inspection of records for this purpose, and any other relevant (i.e., GSA or Commerce) directive. Such disclosure shall not be used to make determinations about individuals.

8. A record from this system of records may be disclosed, as a routine use, to the public after either publication of the application pursuant to 35 U.S.C. 122(b) or issuance of a patent pursuant to 35 U.S.C. 151. Further, a record may be disclosed, subject to the limitations of 37 CFR 1.14, as a routine use, to the public if the record was filed in an application which became abandoned or in which the proceedings were terminated and which application is referenced by either a published application, an application open to public inspections or an issued patent.

9. A record from this system of records may be disclosed, as a routine use, to a Federal, State, or local law enforcement agency, if the USPTO becomes aware of a violation or potential violation of law or regulation.

UNITED STATES PATENT AND TRADEMARK OFFICE

Commissioner for Patents
United States Patent and Trademark Office
P.O. Box 1450
Alexandria, VA 22313-1450
www.uspto.gov

In re Patent No. 6813550
Issue Date: November 2,2004
Application No. 10620440
Filed: July 17,2003
Attorney Docket No. GOT 171

:
:DECISION GRANTING PETITION
:UNDER 37 CFR 1.378(c)
:

This is a decision on the electronic petition, filed November 17,2008 ,under 37 CFR 1.378(c) to accept the unintentionally delayed payment of the 3.5 year maintenance fee for the above-identified patent.

The petition is **GRANTED**.

The maintenance fee is accepted, and the above-identified patent reinstated as of November 17,2008 . This decision also constitutes notice that the fee has been accepted. An electronic copy of the petition and this decision has been created as an entry in the Image File Wrapper. Nevertheless, petitioner should print and retain an independent copy.

Telephone inquiries related to this electronic decision should be directed to the Electronic Business Center at 1-866-217-9197.

MAILED
FROM DIRECTOR'S OFFICE
AUG 1 6 2006
TECHNOLOGY CENTER 3600

UNITED STATES PATENT AND TRADEMARK OFFICE

Commissioner for Patents
United States Patent and Trademark Office
P.O. Box 1450
Alexandria, VA 22313-1450
www.uspto.gov

HALE AND DORR, LLP
1455 PENNSYLVANIA AVENUE, N.W.
WASHINGTON, DC 20004

In re application of	:	**DECISION ON PETITION**
Nitzan Melamed	:	**TO MAKE SPECIAL**
Application No. 10/620,444	:	**(ACCELERATED**
Filed: July 17, 2003	:	**EXAMINATION)**
For: CONSTANT VOLATILITY OR RISK INDICES		

This is in response to the petition filed on May 16, 2006 to make the above-identified application special on the basis of special examining procedure for certain new applications - accelerated examination as set forth in MPEP § 708.02 VIII.

The requirements for granting special status under this section are: (A) a petition to make special accompanied by the fee set forth in 37 CFR 1.17(h); (B) all claims being directed to a single invention, or an election without traverse if the Office determines that all the claims are not directed to a single invention; (C) a statement that a pre-examination search was made listing the field of search; (D) one copy of each of the references deemed most closely related to the subject matter encompassed by the claims if said references are not already of record; and (E) a detailed discussion of how the claimed subject matter is patentable over the references in accordance with 37 CFR 1.111 (b) and (c).

The petition fails to adequately meet requirement (B) above. Regarding item (B), the petition does not include an offer to elect without traverse should the Office determine that all claims are not directed to a single invention.

For the above stated reason, the petition is **DISMISSED.**

Petitioner is given one more opportunity to perfect the petition. Any request for reconsideration must be filed within TWO MONTHS of the date of this decision. Extensions of time under 37 CFR 1.136(a) are permitted.

Applicant should promptly submit a renewed petition to the Commissioner for Patents, P.O. Box 1450, Alexandria, VA 22313-1450. The envelope should indicate that the correspondence be brought to the attention of Technology Center 3600.

Until the renewed petition is submitted, the application will be returned to the examiner's docket to await treatment on the merits in the normal order of examination.

Steven N. Meyers
Special Programs Examiner
Technology Center 3600
(571) 272-6611

SNM/dcg: 8/15/06

UNITED STATES PATENT AND TRADEMARK OFFICE

Commissioner for Patents
United States Patent and Trademark Office
P.O. Box 1450
Alexandria, VA 22313-1450
www.uspto.gov

MAILED
FROM DIRECTOR'S OFFICE

NOV 02 2006

TECHNOLOGY CENTER 3600

HALE AND DORR LLP
1455 PENNSYLVANIA AVENUE, N.W.
WASHINGTON, DC 20004

In re application of
Nitzan Melamed
Application No. 10/620,444
Filed: July 17, 2003
For: CONSTANT VOLATILITY OR RISK INDICES

DECISION ON PETITION TO MAKE SPECIAL (ACCELERATED EXAMINATION)

This is in response to the renewed petition filed on September 21, 2006 to make the above-identified application special on the basis of special examining procedure for certain new applications - accelerated examination as set forth in MPEP § 708.02 VIII.

The requirements for granting special status under this section are: (A) a petition to make special accompanied by the fee set forth in 37 CFR 1.17(i); (B) all claims being directed to a single invention, or an election without traverse if the Office determines that all the claims are not directed to a single invention; (C) a statement that a pre-examination search was made listing the field of search; (D) one copy of each of the references deemed most closely related to the subject matter encompassed by the claims if said references are not already of record; and (E) a detailed discussion of how the claimed subject matter is patentable over the references in accordance with 37 CFR 1.111 (b) and (c).

Since all of the requirements for special status under MPEP § 708.02 VIII have been met, the petition is **GRANTED**.

The examiner is directed (1) to make an interference search for possible interfering applications, (2) to promptly examine this application out of turn, and (3) if any interfering application is discovered, to examine such application simultaneously and state in the first official letter of such application that it is being taken out of turn because of a possible interference.

Petitioner is advised that this application will continue to be special, throughout its entire prosecution and pendency, including interference or appeal, if any, only if petitioner makes a prompt ***bona fide*** effort, in response to each Office action, to place the application in condition for allowance, even if it is necessary to conduct an interview with the examiner to accomplish this purpose.

SUMMARY: Petition to Make Special **GRANTED**.

Randolph A. Reese
Special Programs Examiner
Technology Center 3600
571-272-6619

RAR/dcg: 10/13/06

SPE RESPONSE FOR CERTIFICATE OF CORRECTION

Paper No.:112105

DATE : November 21, 2005

TO SPE OF : ART UNIT 3616

SUBJECT : Request for Certificate of Correction on Patent No.: 6,896,288

A response is requested with respect to the accompanying request for a certificate of correction.

Please complete this form and return with file, within **7** days to:
Certificates of Correction Branch - PK 3-910
Palm location **7590** - Tel. No. 305-8201

With respect to the change(s) requested, correcting Office and/or Applicant's errors, should the patent read as shown in the certificate of correction? No new matter should be introduced, nor should the scope or meaning of the claims be changed.

Thank You For Your Assistance **Certificates of Correction Branch**

The request for issuing the above-identified correction(s) is hereby:
Note your decision on the appropriate box.

☒ **Approved** **All** changes apply.

☐ **Approved in Part** Specify below which changes **do not** apply.

☐ **Denied** State the reasons for denial below.

Comments:

11/21/05

SPE: Paul N. Dickson **Art Unit** 3616

MODIFIED PTO/SB/44 (02-01)
Approved for use through 01/31/2004. OMB 0651-0033
U.S. Patent and Trademark Office; U.S. DEPARTMENT OF COMMERCE
Under the Paperwork Reduction Act of 1995, no persons are required to a collection of information unless it displays a valid OMB control number.
(Also Form PTO-1050)

UNITED STATES PATENT AND TRADEMARK OFFICE
CERTIFICATE OF CORRECTION

PATENT NO : 6,896,288 B2

DATED : 5/24/2005

INVENTOR(S) : Tadashi TANAKA; Masayoshi KUMAGAI

It is certified that error appears in the above-identified patent and that said Letters Patent is hereby corrected as shown below:

Col. 7, delete claim 8 on lines 21-22.

MAILING ADDRESS OF SENDER: Customer Number: 22428

PATENT NO. 6,896,288

No. of additional copies

Burden Hour Statement: This form is estimated to take 1.0 hour to complete. Time will vary depending upon the needs of the individual case. Any comment on the amount of time you are required to complete this form should be sent to the Chief Information Officer, U.S. Patent and Trademark Office, P.O. Box 1450, Alexandria, VA 22313-1450. DO NOT SEND FEES OR COMPLETED FORM TO THIS ADDRESS. SEND TO: Commissioner for Patents, PO Box 1450, Alexandria, VA 22313-1450.

JUN 0 7 2005

UNITED STATES PATENT AND TRADEMARK OFFICE

Commissioner for Patents
United States Patent and Trademark Office
P.O. Box 1450
Alexandria, VA 22313-1450
www.uspto.gov

SEP 14 2005

In re Application of	:	
Judith A. Friese	:	NOTICE OF WITHDRAWAL
Serial No. 10/620,475	:	FROM ISSUE
Filed: July 16, 2003	:	UNDER 37 CFR 1.313(b)
For: STABLE CALIBRATORS OR CONTROLS FOR	:	
MEASURING HUMAN NATIURETIC PEPTIDES	:	

The purpose of this communication is to inform you that the above-identified application is being withdrawn from issue pursuant to 37 CFR 1.313.

The application is being withdrawn to permit reopening of prosecution. The reasons therefore will be communicated to you by the examiner.

PTO records reveal that the issue fee has not been paid. If the issue fee has been submitted, the applicant may request a refund or may request that the fee be credited to a deposit account. However, applicant may wait until the application is either again found allowable or held abandoned. If the application is allowed, upon receipt of a new Notice of Allowance and Issue Fee Due, applicant may request that the previously submitted issue fee be applied toward payment of the issue fee in the amount identified on the new Notice of Allowance and Issue Fee Due. If the application is abandoned, applicant may request either a refund or a credit to a deposit account.

The application is being forwarded to the examiner for action.

Bruce M. Kisliuk, Director
Technology Center 1600

ROBERT DEBERARDINE
ABBOTT LABORATORIES
100 ABBOTT PARK ROAD
DEPT. 377/AP6A
ABBOTT PARK IL 60064-6008

cc: Allowed Files
Drafting Branch

UNITED STATES PATENT AND TRADEMARK OFFICE

COMMISSIONER FOR PATENTS
UNITED STATES PATENT AND TRADEMARK OFFICE
P.O. BOX 1450
ALEXANDRIA, VA 22313-1450
WWW.USPTO.GOV

Paper No.

PAUL D. YASGER
ABBOTT LABORATORIES
100 ABBOTT PARK ROAD
DEPT. 377/AP6A
ABBOTT PARK IL 60064-6008

COPY MAILED

MAR 0 4 2008

OFFICE OF PETITIONS

In re Application of	:	
Judith A. Friese et al.	:	DECISION ON PETITION
Application No. 10/620,475	:	PURSUANT TO
Filed: July 16, 2003	:	37 C.F.R. § 1.182
Attorney Docket No. 7098.US.01	:	
Title: STABLE CALIBRATORS OR	:	
CONTROLS FOR MEASURING HUMAN	:	
NATRIURETIC PEPTIDES		

This is in response to the petition filed on August 24, 2007, pursuant to 37 C.F.R. § 1.182, requesting the withdrawal of two terminal disclaimers.

On April 25, 2007, a terminal disclaimer was submitted to overcome two nonstatutory double patenting rejections over copending applications 10/721,031 and 11/248,650, each made in a final Office action mailed December 15, 2006[1]. With this petition, it has been set forth that these terminal disclaimers are no longer proper.

Petitioner has submitted a portion of the petition fee. The remainder of the same will be charged to Petitioner's Deposit Account in due course.

The Examiner reviewed this request to withdraw the terminal disclaimers, and has determined that both previously filed terminal disclaimers should be withdrawn.

---

1 See rejection of claims 1-17, 19-36, and 52-53 on page 3 of the final Office action.

As such, this petition is **GRANTED.**

The Technology Center will be notified of this decision. **The Technology Center's support staff will withdraw both terminal disclaimers, consistent with this decision,** prior to notifying the Examiner of this decision so that the present application can receive further processing.

Telephone inquiries regarding *this decision* should be directed to the undersigned at (571) 272-3225[2]. All other inquiries concerning examination procedures or status of the application should be directed to the Technology Center.

/Paul Shanoski/
Paul Shanoski
Senior Attorney
Office of Petitions

---

2 Petitioner will note that all practice before the Office should be in writing, and the action of the Office will be based exclusively on the written record in the Office. See 37 C.F.R. § 1.2. As such, Petitioner is reminded that no telephone discussion may be controlling or considered authority for any further action(s) of Petitioner.

UNITED STATES PATENT AND TRADEMARK OFFICE

Commissioner for Patents
United States Patent and Trademark Office
P.O. Box 1450
Alexandria, VA 22313-1450
www.uspto.gov

FISH & RICHARDSON PC
P.O. BOX 1022
MINNEAPOLIS MN 55440-1022

COPY MAILED

DEC 28 2007

OFFICE OF PETITIONS

In re Application of Zacché et al. Application No. 10/620479 Filing or 371(c) Date: 07/16/2003 Patent No.: 7072553 Issue Date: 07/04/2006 Attorney Docket No.: 13445-002002	: : : : : : :	DECISION ON PETITION

This is a decision on the correspondence entitled "Petition Under 37 C.F.R. 3.81(b)," filed October 30, 2007, to correct the name of the assignee on the front page of the above-identified patent by way of a Certificate of Correction.

The Petition is **granted**.

The petition was accompanied by a certificate of correction as required by 3.81(b), and the fee submitted with the present petition. Further, Office assignment records reflect that Omni Guide, Inc., is the assignees of record. As the request complies with the provisions of 37 CFR 3.81(b), it would be appropriate for a certificate of correction to be processed.

The application file does not indicate a change of address has been filed in this case, although the address given on the petition differs from the address of record. A change of address should be filed in this case in accordance with MPEP 601.03. A courtesy copy of this decision is being mailed to the address noted on the petition. However, until otherwise instructed, all future correspondence regarding this application will be mailed solely to the address of record.

Telephone inquiries concerning this matter should be directed to the undersigned at (571) 272-3232. Any questions concerning the issuance of the Certificate of Correction should be directed to the Certificate of Correction Branch at (571) 272-4200.

This matter is being referred to the Certificates of Correction Branch for processing of a certificate of correction after issuance of this application into a patent.

Derek L. Woods
Attorney
Office of Petitions

CC: FISH & RICHARDSON PC
225 FRANKLIN STREET
BOSTON, MA 02110

UNITED STATES PATENT AND TRADEMARK OFFICE

Commissioner for Patents
United States Patent and Trademark Office
P.O. Box 1450
Alexandria, VA 22313-1450
www.uspto.gov

JUN 29 2004

LEON D. ROSEN
FREILICH, HORNBAKER & ROSEN
Suite 1220
10960 Wilshire Blvd.
Los Angeles CA 90024

In re Application of	:	
Max Harry Weil, et al	:	
Serial No.: 10/620,481	:	DECISION ON PETITION
Filed: July 16, 2003	:	
For: Controlled Chest Compressor	:	

This is in response to the petition applicant filed on July 16, 2003 to make the above-identified application special under the provisions of 37 CFR 1.102(d).

Applicant has satisfied the provisions set forth in M.P.E.P. 708.02, VIII, thus the petition is **GRANTED**.

The application will be forwarded to the examiner for action on the merits commensurate with this decision.

Should there be any questions with regard to this letter please contact John Kittle by letter addressed to the Director, Technology Center 3700/2900, P.O. Box 1450 Alexandria, VA 22313-1450, or by telephone at (703) 308-0873 or by facsimile transmission at (703) 308-3139.

John E. Kittle

John E. Kittle
Director
Technology Center 3700/2900

UNITED STATES PATENT AND TRADEMARK OFFICE

COMMISSIONER FOR PATENTS
UNITED STATES PATENT AND TRADEMARK OFFICE
P.O. BOX 1450
ALEXANDRIA, VA 22313-1450
www.uspto.gov

Richard P. Gilly
Wolf, Block, Schorr and Solis-Cohen LLP
22nd Floor
1650 Arch Street
Philadelphia PA 19103

COPY MAILED
JUL 06 2005
OFFICE OF PETITIONS

Applicant: Gale et al.
Appl. No.: 10/620,530
Filing Date: July 16, 2003
Title: PORTABLE, CRYOGENIC GAS DELIVERY APPARATUS
Attorney Docket No.: S1022.8098US01
Pub. No.: US 2005/0011583 A1
Pub. Date: January 20, 2005

This is a decision on the request for corrected of patent application publication under 37 CFR 1.221(b), filed on February 2, 2005, for the above-identified application

The request is DISMISSED.

Applicant requests that the application be republished because the front page of the patent application publication omits the assignment information.

37 CFR 1.221 (b) is applicable "only when the Office makes a material mistake which is apparent from Office records." A material mistake must affect the public's ability to appreciate the technical disclosure of the patent application publication, to determine the scope of the patent application publication, or to determine the scope of the provisional rights that an applicant may seek to enforce upon issuance of a patent.[1]

The instant request does not identify a mistake in the publication made by the Office. The assignment information was not printed on the patent application publication, because it was not provided on the transmittal letter or on an application data sheet.[2]

Applicant is reminded of his duty to conduct a reasonable inquiry before filing a paper before the Office. See MPEP 410.

---

[1] Changes to Implement Eighteen-Month Publication of Patent Applications, 65 FR 57023, 57038 (Sept. 20, 2000), 1239, Off. Gaz. Pat. Office Notices 63, 75 (Oct. 10, 2000) (final rule).
[2] See Comment 59, Changes to Implement Eighteen-Month Publication of Patent Applications, 65 FR 57023, 57047 (Sept. 20, 2000), 1239 Off. Gaz. Pat. Office Notices 63, 84 (Oct. 10, 2000) (final rule).

Applicant's request for a corrected patent application publication on February 2, 2005, may constitute a "failure to engage in reasonable efforts to conclude processing or examination of the application." See 1.704(c). This determination will be made on or after a mailing of a Notice of Allowance.

The applicant is advised that a "request for republication of an application previously published" may be filed under 37 CFR 1.221 (a). Such a request for republication "must include a copy of the application compliance with the Office's electronic filing system requirements and be accompanied by the publication fee set forth in § 1.18 (d) and the processing fee set forth in § 1.17 (i)." If the request for republication does not comply with the electronic filing system requirements, the republication will not take place and the publication fee set forth in § 1.18 (d) will be refunded. The processing fee will be retained.

Any request for republication under 37 CFR 1.221(a), must be submitted via the EFS system and questions or request for reconsideration of the decision, should be addressed as follows:

By mail to: Mail Stop PGPUB
Commissioner for Patents
P.O. Box 1450
Alexandria, Va. 22313-1450

By facsimile: 703-872-9306 or after July 15, 2005, 571-273-8300

Inquiries relating to this matter may be directed to Mark Polutta at (571) 272-7709 (voice)

Mark O. Polutta

Mark Polutta
Legal Advisor
Office of Patent Legal Administration
Office of the Deputy Commissioner
For Patent Examination Policy

UNITED STATES PATENT AND TRADEMARK OFFICE

COMMISSIONER FOR PATENTS
UNITED STATES PATENT AND TRADEMARK OFFICE
WASHINGTON, DC 20231
www.uspto.gov

Paper No.

MAILED

DEC 21 2004

Technology Center 2100

Thomas A. Walsh
ICE MILLER
One American Square, Box 82001
Indianapolis, IN 46282-0200

In re Application of: John R. Rice
Application No. 10/620,534
Filed: July 16, 2003
For: NEW GUARDS FOR APPLICATION IN SOFTWARE TAMPERPROOFING

DECISION ON PETITION TO MAKE SPECIAL

This is a decision on the petition under 37 C.F.R. § 1.102(c) and M.P.E.P. § 708.02, Section IV: Applicant's Age, November 3, 2004, to make the above-identified application special.

A grantable petition to make special under 37 C.F.R. § 1.102(c) and in accordance with M.P.E.P. § 708.02, Section IV must include a showing, as by a birth certificate or the applicant's statement, that the applicant is sixty five (65) years of age or more. No fee is required for this petition.

The petition includes a copy of the statement that the applicant, is over sixty five (65) years of age.

Accordingly, the petition is GRANTED. The application is being forwarded to the examiner for expedite prosecution.

James R. Matthews
for Vincent N. Trans
Special Program Examiner
Technology Center 2100
Computer Architecture, Software, and Information Security
(571) 272-3613

UNITED STATES PATENT AND TRADEMARK OFFICE

Commissioner for Patents
United States Patent and Trademark Office
P.O. Box 1450
Alexandria, VA 22313-1450
www.uspto.gov

LATHROP & GAGE LC
2345 GRAND AVENUE
SUITE 2800
KANSAS CITY, MO 64108

COPY MAILED

AUG 1 5 2008

OFFICE OF PETITIONS

In re Application of	:	
Baxter, et. al.	:	
Application No. 10/620,545	:	DECISION ON PETITION
Filed: July 16, 2003	:	
Attorney Docket No. 387339	:	

This is a decision on the petition under the unintentional provisions of 37 CFR 1.137(b), filed January 30, 2008, to revive the above-identified application.

The petition is **GRANTED**.

This application became abandoned for failure to timely pay the issue and publication fees on or before May 15, 2006, as required by the Notice of Allowance and Fee(s) Due mailed February 14, 2006. Accordingly, the application became abandoned on May 16, 2006. A Notice of Abandonment was mailed June 28, 2006.

The petition satisfies the requirements of 37 CFR 1.137(b) in that petitioner has supplied (1) the reply in the form of payment of the issue fee of $720 and the publication fee of $300, (2) the petition fee of $770; and (3) a proper statement of unintentional delay.

Telephone inquiries concerning this decision should be directed to Alicia Kelley at (571)272-6059.

This application is being referred to the Office of Data Management for processing into a patent.

Sherry D. Brinkley
Petitions Examiner
Office of Petitions

UNITED STATES PATENT AND TRADEMARK OFFICE

Commissioner for Patents
United States Patent and Trademark Office
P.O. Box 1450
Alexandria, VA 22313-1450
www.uspto.gov

MERCHANT & GOULD PC
P.O. BOX 2903
MINNEAPOLIS MN 55402-0903

COPY MAILED

JUL 17 2007

OFFICE OF PETITIONS

In re Application of
Bart Terbraak
Application No. 10/620,550
Filed: July 16, 2003
Attorney Docket No. 09424.0190US01

DECISION ON PETITION
TO WITHDRAW
FROM RECORD

This is a decision on the Request to Withdraw as attorney or agent of record under 37 C.F.R. § 1.36(b) filed January 22, 2007.

The request is **APPROVED**.

A grantable request to withdraw as attorney/agent of record must be signed by every attorney/agent seeking to withdraw or contain a clear indication that one attorney is signing on behalf of another/others. A request to withdraw will not be approved unless at least 30 (thirty) days would remain between the date of approval and the later of the expiration date of a time to file a response or the expiration date of the maximum time period which can be extended under 37 C.F.R. § 1.136(a).

The request was signed by Sara M. Monfeldt on behalf of herself.

Sara M. Monfeldt has been withdrawn as attorney; all other attorneys remain of record.

The correspondence address of record remains unchanged.

There is an outstanding Office action mailed May 11, 2007 that requires a reply by applicant.

Telephone inquiries concerning this decision should be directed to undersigned at 571-272-1642.

April M. Wise
Petitions Examiner
Office of Petitions

UNITED STATES PATENT AND TRADEMARK OFFICE

Commissioner for Patents
United States Patent and Trademark Office
P.O. Box 1450
Alexandria, VA 22313-1450
www.uspto.gov

BIRCH STEWART KOLASCH & BIRCH
PO BOX 747
FALLS CHURCH VA 22040-0747

COPY MAILED

DEC 14 2005

OFFICE OF PETITIONS

In re Patent No. 6,942,823	:	DECISION ON
Terada, et al.	:	PATENT TERM ADJUSTMENT
Issue Date: September 13, 2005	:	AND NOTICE OF INTENT
Application No. 10/620,557	:	TO ISSUE
Filed: July 17, 2003	:	CERTIFICATE OF
Attorney Docket No. 0216-0490P	:	CORRECTION

This is a decision on the "REQUEST FOR RECONSIDERATION OF PATENT TERM ADJUSTMENT UNDER § 1.705", filed October 14, 2005. Patentee requests that the patent term adjustment indicated on the patent be corrected from twenty-four (24) days to fifty-six (56) days.

The petition is **GRANTED**.

The patent term adjustment indicated on the patent is to be corrected by issuance of a certificate of correction showing a revised Patent Term Adjustment of **fifty-six (56)** days.

On September 13, 2005, the above-identified application matured into U.S. Patent No. 6,942,823. The instant request for reconsideration filed October 14, 2005 was timely filed within two months of the date the patent issued. See §1.705(d). The Patent issued with a Patent Term Adjustment of twenty-four (24) days.

Patentee states that the patent is not subject to a terminal disclaimer.

The Office determined a patent term adjustment of twenty-four (24) days based on an adjustment for PTO delay of one hundred thirty-two (132) days pursuant to 35 U.S.C. 154(b)(1)(A)(i) and 37 C.F.R. §1.703(a)(1), and eighteen (18) days pursuant to 35 U.S.C. 154(b)(1)(B)(iii) and 37 C.F.R. §1.703(a)(6), reduced by applicants' delays of one hundred twenty (120) and six (6) days pursuant to 35 U.S.C. 154(b)(2)(C)(iii) and 37 C.F.R. § 1.704(c)(10). The PTO delays have been reviewed and found to be correct. The adjustments of 120 and 6 days are at issue.

The Notice of Allowance was mailed on January 27, 2005. On April 20, 2005, Applicants filed an IDS. Six days later, applicants filed a Rule 312 Amendment. The Office mailed a response to the IDS and Rule 312 Amendment on July 22, 2005. Accordingly, pursuant to 37 C.F.R. 1.704(c)(10), ninety-four (94) days of applicant delay should have been assessed, not 126.

In view thereof, the correct determination of PTA at the time of issuance is fifty-six (56) days (150 days of PTO delay and 94 days of applicant delay).

Receipt of the $200.00 fee set forth in 37 C.F.R. §1.18(e) is acknowledged.

The application file is being forwarded to the Certificates of Correction Branch for issuance of a certificate of correction in order to rectify the error regarding the patent term information. See 35 U.S.C. § 254 and 37 C.F.R. § 1.322. The certificate of correction will indicate that the term of the above-identified patent is extended or adjusted by **fifty-six (56)** days subject to any disclaimers.

Telephone inquiries specific to this matter should be directed to Cliff Congo, Petitions Attorney, at (571)272-3207.

Kery A. Fries

Kery Fries
Senior Legal Advisor
Office of Patent Legal Administration
Office of Deputy Commissioner
for Patent Examination Policy

Enc: draft certificate of correction

UNITED STATES PATENT AND TRADEMARK OFFICE

Commissioner for Patents
United States Patent and Trademark Office
P.O. Box 1450
Alexandria, VA 22313-1450
www.uspto.gov

FISH & RICHARDSON
P.O. BOX 1022
MINNEAPOLIS MN 55440-1022

COPY MAILED

MAR 30 2007

OFFICE OF PETITIONS

In re Application of	:	
Jun Koyama et al	:	
Application No. 10/620,565	:	ON PETITION
Filed: July 17, 2003	:	
Attorney Docket No. 07977-209003/US3523D1D1	:	

This is a decision on the petition, filed March 30, 2007, under 37 CFR 1.313(c)(2) to withdraw the above-identified application from issue after payment of the issue fee.

The petition is **GRANTED.**

The above-identified application is withdrawn from issue for consideration of a submission under 37 CFR 1.114 (request for continued examination). See 37 CFR 1.313(c)(2).

Petitioner is advised that the issue fee paid on December 29, 2006 in the above-identified application cannot be refunded. If, however, the above-identified application is again allowed, petitioner may request that it be applied towards the issue fee required by the new Notice of Allowance.[1]

Telephone inquiries should be directed to the undersigned at (571) 272-3208.

The examiner of Technology Center AU 2822 will consider the request for continued examination under 37 CFR 1.114.

Karen Creasy

Karen Creasy
Petitions Examiner
Office of Petitions

---

[1] The request to apply the issue fee to the new Notice may be satisfied by completing and returning the new Issue Fee Transmittal Form PTOL-85(b), which includes the following language thereon: "Commissioner for Patents is requested to apply the Issue Fee and Publication Fee (if any) or re-apply any previously paid issue fee to the application identified above." Petitioner is advised that, whether a fee is indicated as being due or not, the Issue Fee Transmittal Form **must** be completed and timely submitted to avoid abandonment. Note the language in bold text on the first page of the Notice of Allowance and Fee(s) Due (PTOL-85).

UNITED STATES PATENT AND TRADEMARK OFFICE

Commissioner for Patents
United States Patent and Trademark Office
P.O. Box 1450
Alexandria, VA 22313-1450
www.uspto.gov

COCHRAN FREUND
& YOUNG LLC
LSI CORPORATION
2026 CARIBOU DRIVE
SUITE 201
FORT COLLINS CO 80525

COPY MAILED
DEC 07 2009
OFFICE OF PETITIONS

In re Application of	:	
Balaji, et al.	:	
Application No. 10/620,581	:	DECISION
Filed/Deposited: 15 July, 2003	:	
Attorney Docket No. LSI.197US01 (03-0773)	:	

This is a decision on the petition, filed on 11 September, 2009, for revival of an application abandoned due to unintentional delay under 37 C.F.R. §1.137(b).

The petition under 37 C.F.R. §1.137(b) is **DISMISSED**.

Any further petition to revive must be submitted within TWO (2) MONTHS from the mail date of this decision. Extensions of time under 37 C.F.R. §1.136(a) are permitted. The reconsideration request should include a cover letter entitled "Renewed Petition under 37 C.F.R. §1.137(b)."

This is **not** a final agency action within the meaning of 5 U.S.C.§704.

As to the Allegations
of Unintentional Delay

The requirements of a grantable petition pursuant to 37 C.F.R. §1.137(b) are the petition and fee therefor, a reply, a proper statement of unintentional delay under the regulation, and, where applicable, a terminal disclaimer and fee. (However, it does not appear that a terminal disclaimer and fee are due here.)

Petitioner does not appear to have addressed the showing/statement requirement(s) under the rule. This deficiency must be overcome.

Petitioners attentions always are directed to the guidance in the Commentary at MPEP §711.03(c)(II).

BACKGROUND

The record reflects as follows:

Former Counsel (Sandeep Jaggi) failed to reply timely and properly to Notice of Allowance/Allowarbility and Fees Due mailed on 30 March, 2009, with reply due under a non-extendable deadline on or before 30 June, 2009.

The application went abandoned by operation of law after midnight 30 June, 2009.

It does not appear that the Office mailed the Notice of Abandonment before a petition was filed.

On 11 September, 2009, Petitioner (William W. Cochran) filed, *inter alia*, a petition (with fee) under 37 C.F.R. §1.137(b), ka reply in the form of fees due, and averred unintentional delay as the basis for the petition. Notably, however, Petitioner was not the person under whose control the application appears to have gone abandoned, and Petitioner has not indicated that e has made an inquiry consistent with his duty to the Office failed to submit the reply required under the regulation.[1] (In the week of November 23-27, 2009, Petitioner's office called and inquired in this regard, and, further, indicated that it would file a supplementary statement in this matter. However, as of this writing no such statement appears of record in the IFW.).

The Office mailed the Notice of Abandonment on 24 September, 2009.

Petitioners' attentions always are directed to the guidance in the Commentary at MPEP §711.03(c)(II).

The availability of applications and application papers online to applicants/practitioners who diligently associate their Customer Number with the respective application(s) now provides an applicant/practitioner on-demand information as to events/transactions in an application.

Out of an abundance of caution, Petitioners always are reminded that those registered to practice and all others who make representations before the Office **must** inquire into the underlying facts of representations made to the Office and support averments with the appropriate documentation–since all owe to the Office the continuing duty to disclose.[2]

---

[1] See Changes to Patent Practice and Procedure, 62 Fed. Reg. at 53160 and 53178, 1203 Off. Gaz. Pat. Office at 88 and 103 (responses to comments 64 and 109)(applicant obligated under 37 C.F.R. §10.18 to inquire into the underlying facts and circumstances when providing the statement required by 37 C.F.R. §1.137(b) to the Patent and Trademark Office).

[2] See supplement of 17 June, 1999. The Patent and Trademark Office is relying on petitioner's duty of candor and good faith and accepting a statement made by Petitioner. See Changes to Patent Practice and Procedure, 62 Fed. Reg. at 53160 and 53178, 1203 Off. Gaz. Pat. Office at 88 and 103 (responses to comments 64 and 109)(applicant obligated under 37 C.F.R. §10.18 to inquire into the underlying facts and circumstances when providing statements to the Patent and Trademark Office).

As to Allegations of
Unintentional Delay

As indicated above, the requirements of a grantable petition pursuant to 37 C.F.R. §1.137(b) are the petition and fee therefor, a proper reply, a proper statement and/or showing of unintentional delay under the regulation, and, where applicable, a terminal disclaimer and fee.

As discussed above, it does not appear that Petitioner has satisfied the statement/showing requirement under the rule.

CONCLUSION

Accordingly, the petition under 37 C.F.R. §1.137(b) is **dismissed**.

Further correspondence with respect to this matter should be addressed as follows:

By Mail: Mail Stop PETITION
Commissioner for Patents
P. O. Box 1450
Alexandria, VA 22313-1450

By hand: U. S. Patent and Trademark Office
Customer Service Window, Mail Stop Petitions
Randolph Building
401 Dulany Street
Alexandria, VA 22314

By facsimile: **(571) 273-8300**
Attn: Office of Petitions

Telephone inquiries regarding this decision may be directed to the undersigned at (571) 272-3214—it is noted, however, that all practice before the Office is in writing (see: 37 C.F.R. §1.2[3]) and the proper authority for action on any matter in this regard are the statutes (35 U.S.C.), regulations (37 C.F.R.) and the commentary on policy (MPEP). Therefore, no telephone discussion may be controlling or considered authority for Petitioner's action(s).

/John J. Gillon, Jr./
John J. Gillon, Jr.
Senior Attorney
Office of Petitions

[3] The regulations at 37 C.F.R. §1.2 provide:

§1.2 Business to be transacted in writing.

All business with the Patent and Trademark Office should be transacted in writing. The personal attendance of Petitioners or their attorneys or agents at the Patent and Trademark Office is unnecessary. The action of the Patent and Trademark Office will be based exclusively on the written record in the Office. No attention will be paid to any alleged oral promise, stipulation, or understanding in relation to which there is disagreement or doubt.

UNITED STATES PATENT AND TRADEMARK OFFICE

Commissioner for Patents
United States Patent and Trademark Office
P.O. Box 1450
Alexandria, VA 22313-1450
www.uspto.gov

COCHRAN FREUND
& YOUNG LLC
LSI CORPORATION
2026 CARIBOU DRIVE
SUITE 201
FORT COLLINS CO 80525

COPY MAILED
MAR 15 2010

In re Application of	:	
Balaji, et al.	:	
Application No. 10/620,581	:	DECISION
Filed/Deposited: 15 July, 2003	:	
Attorney Docket No. LSI.197US01 (03-0773)	:	

This is a decision on the petition, filed on 30 December, 2009, for revival of an application abandoned due to unintentional delay under 37 C.F.R. §1.137(b).

The petition under 37 C.F.R. §1.137(b) is **GRANTED**.

As to the Allegations
of Unintentional Delay

The requirements of a grantable petition pursuant to 37 C.F.R. §1.137(b) are the petition and fee therefor, a reply, a proper statement of unintentional delay under the regulation, and, where applicable, a terminal disclaimer and fee. (However, it does not appear that a terminal disclaimer and fee are due here.)

A Petitioner's attentions always are directed to the guidance in the Commentary at MPEP §711.03(c)(II).

BACKGROUND

The record reflects as follows:

Former Counsel (Sandeep Jaggi) failed to reply timely and properly to Notice of Allowance/Allowarbility and Fees Due mailed on 30 March, 2009, with reply due under a non-extendable deadline on or before 30 June, 2009.

The application went abandoned by operation of law after midnight 30 June, 2009.

It does not appear that the Office mailed the Notice of Abandonment before a petition was filed.

On 11 September, 2009, Petitioner (William W. Cochran) filed, *inter alia*, a petition (with fee) under 37 C.F.R. §1.137(b), a reply in the form of fees due, and averred unintentional delay as the basis for the petition. Notably, however, Petitioner was not the person under whose control the application appears to have gone abandoned, and Petitioner has not indicated that e has made an inquiry consistent with his duty to the Office failed to submit the reply required under the regulation.[1] In the week of November 23-27, 2009, Petitioner's office called and inquired in this regard, and, further, indicated that it would file a supplementary statement in this matter. However, as of the 7 December, 2009, decision dismissing the petition, no such statement appeared of record in the IFW.

The Office mailed the Notice of Abandonment on 24 September, 2009.

On 30 December, 2009, Petitioner renewed the petition and overcame the deficiency as to the statement of unintentional delay.

Petitioners' attentions always are directed to the guidance in the Commentary at MPEP §711.03(c)(II).

The availability of applications and application papers online to applicants/practitioners who diligently associate their Customer Number with the respective application(s) now provides an applicant/practitioner on-demand information as to events/transactions in an application.

Out of an abundance of caution, Petitioners always are reminded that those registered to practice and all others who make representations before the Office **must** inquire into the underlying facts of representations made to the Office and support averments with the appropriate documentation–since all owe to the Office the continuing duty to disclose.[2]

STATUTES, REGULATIONS AND ANALYSIS

Congress has authorized the Commissioner to "revive an application if the delay is shown to the satisfaction of the Commissioner to have been "unavoidable." 35 U.S.C. §133 (1994).[3]

---

[1] See Changes to Patent Practice and Procedure, 62 Fed. Reg. at 53160 and 53178, 1203 Off. Gaz. Pat. Office at 88 and 103 (responses to comments 64 and 109)(applicant obligated under 37 C.F.R. ' 10.18 to inquire into the underlying facts and circumstances when providing the statement required by 37 C.F.R. ' 1.137(b) to the Patent and Trademark Office).

[2] See supplement of 17 June, 1999. The Patent and Trademark Office is relying on petitioner's duty of candor and good faith and accepting a statement made by Petitioner. See Changes to Patent Practice and Procedure, 62 Fed. Reg. at 53160 and 53178, 1203 Off. Gaz. Pat. Office at 88 and 103 (responses to comments 64 and 109)(applicant obligated under 37 C.F.R. §10.18 to inquire into the underlying facts and circumstances when providing statements to the Patent and Trademark Office).

[3] 35 U.S.C. §133 provides:

The regulations at 37 C.F.R. §1.137(a) and (b) set forth the requirements for a Petitioner to revive a previously unavoidably or unintentionally, respectively, abandoned application under this congressional grant of authority.

Unintentional delays are those that do not satisfy the very strict statutory and regulatory requirements of unavoidable delay, and also, by definition, are not intentional.[4]))

As to Allegations of
Unintentional Delay

The requirements of a grantable petition pursuant to 37 C.F.R. §1.137(b) are the petition and fee therefor, a reply, a proper statement of unintentional delay under the regulation, and, where applicable, a terminal disclaimer and fee.

It appears that the requirements under the rule have been satisfied.

CONCLUSION

Accordingly, the petition pursuant to 37 C.F.R. §1.137(b) is **granted**.

The instant application is released to the Publications Branch to be processed into a patent in due course.

Petitioner may find it beneficial to view Private PAIR within a fortnight of the instant decision to ensure that the revival has been acknowledged by the Publications Branch in response to this decision. It is noted that all inquiries with regard to that change in status need be directed to the Publications Branch where that change of status must be effected—that does not occur in the Office of Petitions.

---

35 U.S.C. §133 Time for prosecuting application.
Upon failure of the applicant to prosecute the application within six months after any action therein, of which notice has been given or mailed to the applicant, or within such shorter time, not less than thirty days, as fixed by the Commissioner in such action, the application shall be regarded as abandoned by the parties thereto, unless it be shown to the satisfaction of the Commissioner that such delay was unavoidable.

[4] Therefore, by example, an unintentional delay in the reply might occur if the reply and transmittal form are to be prepared for shipment by the US Postal Service, but other pressing matters distract one's attention and the mail is not timely deposited for shipment.

Telephone inquiries regarding this decision may be directed to the undersigned at (571) 272-3214—it is noted, however, that all practice before the Office is in writing (see: 37 C.F.R. §1.2[5]) and the proper authority for action on any matter in this regard are the statutes (35 U.S.C.), regulations (37 C.F.R.) and the commentary on policy (MPEP). Therefore, no telephone discussion may be controlling or considered authority for Petitioner's action(s).

/John J. Gillon, Jr./
John J. Gillon, Jr.
Senior Attorney
Office of Petitions

---

[5] The regulations at 37 C.F.R. §1.2 provide:
§1.2 Business to be transacted in writing.
All business with the Patent and Trademark Office should be transacted in writing. The personal attendance of applicants or their attorneys or agents at the Patent and Trademark Office is unnecessary. The action of the Patent and Trademark Office will be based exclusively on the written record in the Office. No attention will be paid to any alleged oral promise, stipulation, or understanding in relation to which there is disagreement or doubt.

SPE RESPONSE FOR CERTIFICATE OF CORRECTION

Paper No.: _____

DATE : 12/5/08

TO SPE OF : ART UNIT 2814

SUBJECT : Request for Certificate of Correction for Appl. No.: 10620608 Patent No.: 6885103

Please respond to this request for a certificate of correction within 7 days.

FOR IFW FILES:

Please review the requested changes/corrections as shown in the **COCIN** document(s) in the IFW application image. No new matter should be introduced, nor should the scope or meaning of the claims be changed.

Please complete the response (see below) and forward the completed response to scanning using document code **COCX**.

FOR PAPER FILES:

Please review the requested changes/corrections as shown in the attached certificate of correction. Please complete this form (see below) and forward it with the file to:

Certificates of Correction Branch (CofC)
South Tower - 9A22
Palm Location 7580

Valerie Jackson
Certificates of Correction Branch
703-308-9390 ext. 114

Thank You For Your Assistance

The request for issuing the above-identified correction(s) is hereby:
Note your decision on the appropriate box.

- ☑ **Approved** — All changes apply.
- ☐ **Approved in Part** — Specify below which changes **do not** apply.
- ☐ **Denied** — State the reasons for denial below.

Comments: _____

SPE

2814
Art Unit

UNITED STATES PATENT AND TRADEMARK OFFICE

COMMISSIONER FOR PATENTS
UNITED STATES PATENT AND TRADEMARK OFFICE
P.O. BOX 1450
ALEXANDRIA, VA 22313-1450
www.uspto.gov

WILMER CUTLER PICKERING HALE AND DORR LLP
399 PARK AVENUE
NEW YORK, NY 10022

In re Application of	:	
Alex Nivorozhkin, et al.	:	
Application No. 10/620,619	:	ON PETITION
Filed: July 17, 2003	:	
Attorney Docket No. 289591.136US1	:	

This is a decision on the petition, filed March 7, 2005, under 37 CFR 1.313(c)(2) to withdraw the above-identified application from issue after payment of the issue fee.

The petition is **GRANTED**.

The above-identified application is withdrawn from issue for consideration of a submission under 37 CFR 1.114 (request for continued examination). See 37 CFR 1.313(c)(2).

Petitioner is advised that the issue fee paid on January 6, 2005, in the above-identified application cannot be refunded. If, however, the above-identified application is again allowed, petitioner may request that it be applied towards the issue fee required by the new Notice of Allowance. [1]

Telephone inquiries relating to this decision should be directed to the undersigned at (571) 272-3204.

The application is being referred to Technology Center AU 1626 for further processing of the request for continued examination under 37 CFR 1.114.

Sherry D. Brinkley
Petitions Examiner
Office of Petitions
Office of the Deputy Commissioner
for Patent Examination Policy

[1]The request to apply the issue fee to the new Notice may be satisfied by completing and returning the new Issue Fee Transmittal Form PTOL-85(b), which includes the following language thereon: " Commissioner for Patents is requested to apply the Issue Fee and Publication Fee (if any) or re-apply any previously paid issue fee to the application identified above." Petitioner is advised that, whether a fee is indicated as being due or not, the Issue Fee Transmittal Form must be completed and timely submitted to avoid abandonment. Note the language in bold text on the first page of the Notice of Allowance and Fee(s) Due (PTOL-85).

UNITED STATES PATENT AND TRADEMARK OFFICE

COMMISSIONER FOR PATENTS
UNITED STATES PATENT AND TRADEMARK OFFICE
P.O. BOX 1450
ALEXANDRIA, VA 22313-1450
www.uspto.gov

WILMER CUTLER PICKERING HALE AND DORR LLP
399 PARK AVENUE
NEW YORK, NY 10022

COPY MAILED
DEC 0 9 2005
OFFICE OF PETITIONS

In re Application of
Alex Nivorozhkin, et al.
Application No. 10/620,619
Filed: July 17, 2003
Attorney Docket No.: 289591.136 US1

ON PETITION

This is a decision on the petition, filed December 8, 2005, under 37 CFR 1.313(c)(2) to withdraw the above-identified application from issue after payment of the issue fee.

The petition is **GRANTED**.

The above-identified application is withdrawn from issue for consideration of a submission under 37 CFR 1.114 (request for continued examination). See 37 CFR 1.313(c)(2).

Petitioner is advised that the issue fee paid on October 18, 2005, in the above-identified application, cannot be refunded. If, however, the above-identified application is again allowed, petitioner may request that it be applied towards the issue fee required by the new Notice of Allowance.[1]

Telephone inquiries relating to this decision should be directed to the undersigned at (571) 272-3204.

The application is being referred to Technology Center AU 1626 for further processing of the request for continued examination under 37 CFR 1.114.

Sherry D. Brinkley
Petitions Examiner
Office of Petitions

[1]The request to apply the issue fee to the new Notice may be satisfied by completing and returning the new Issue Fee Transmittal Form PTOL-85(b), which includes the following language thereon: "Commissioner for Patents is requested to apply the Issue Fee and Publication Fee (if any) or re-apply any previously paid issue fee to the application identified above." Petitioner is advised that, whether a fee is indicated as being due or not, the Issue Fee Transmittal Form **must** be completed and timely submitted to avoid abandonment. Note the language in bold text on the first page of the Notice of Allowance and Fee(s) Due (PTOL-85).

UNITED STATES PATENT AND TRADEMARK OFFICE

Commissioner for Patents
United States Patent and Trademark Office
P.O. Box 1450
Alexandria, VA 22313-1450
www.uspto.gov

NIXON & VANDERHYE P.C./G.E.
1100 N. GLEBE RD.
SUITE 800
ARLINGTON VA 22201

COPY MAILED

OCT 2 0 2004

OFFICE OF PETITIONS
ON PETITION

In re Application of :
Christopher A. Kaminski et al :
Application No. 10/620,624 :
Filed: July 17, 2003 :
Attorney Docket No. 839-1186 :

This is a decision on the petition, filed October 19, 2004, under 37 CFR 1.313(c)(2) to withdraw the above-identified application from issue after payment of the issue fee.

The petition is **GRANTED**.

The above-identified application is withdrawn from issue for consideration of a submission under 37 CFR 1.114 (request for continued examination). See 37 CFR 1.313(c)(2).

Petitioner is advised that the issue fee paid on September 15, 2004 in the above-identified application cannot be refunded. If, however, the above-identified application is again allowed, petitioner may request that it be applied towards the issue fee required by the new Notice of Allowance.[1]

Telephone inquiries should be directed to the undersigned at (703) 305-8859.

The examiner of Technology Center AU 2859 will consider the request for continued examination under 37 CFR 1.114.

Karen Creasy
Petitions Examiner
Office of Petitions
Office of the Deputy Commissioner
for Patent Examination Policy

---

[1] The request to apply the issue fee to the new Notice may be satisfied by completing and returning the new Issue Fee Transmittal Form PTOL-85(b), which includes the following language thereon: "Commissioner for Patents is requested to apply the Issue Fee and Publication Fee (if any) or re-apply any previously paid issue fee to the application identified above." Petitioner is advised that, whether a fee is indicated as being due or not, the Issue Fee Transmittal Form **must** be completed and timely submitted to avoid abandonment. Note the language in bold text on the first page of the Notice of Allowance and Fee(s) Due (PTOL-85).

UNITED STATES PATENT AND TRADEMARK OFFICE

Technology Center 1700

Mailed: 11-30-05

MEB
Paper Number:

In re application of
Mather et al.
Serial No. 10/620,644
Filed: July 16, 2003
For: Nonionic Telechelic Polymers Incorporating Polyhedral Oligosilsesquioxane (POSS) And Uses Thereof

DECISION ON PETITION

This is a response to the PETITION TO WITHDRAW ABANDONMENT, filed March 24, 2005. The petition requests that the abandonment, as set forth in the Notice of Abandonment of March 3, 2005, for failure to timely reply to the Notice of Allowance of October 5, 2004 be withdrawn. The petitioner asserts that the issue fee payment was timely filed by mail with the Office on January 4, 2005, with the appropriate fees. A certification of mailing, a signed statement attesting to the previous timely mailing by the person who signed the Certificate of Mailing, and copies of a mailing log are provided as evidence.

DECISION

The instant request is accepted as a timely petition under 37 C.F.R. 1.181 (no fee), and is evaluated under the procedures regarding a Petition To Withdraw Holding of Abandonment Based on Evidence That a Reply Was Timely Mailed or Filed.

As set forth in MPEP 711.03(c) Petition To Withdraw Holding of Abandonment Based on Evidence That a Reply Was Timely Mailed or Filed:
37 CFR 1.10(c) through 1.10(e) set forth procedures for petitioning the Director of the USPTO to accord a filing date to correspondence as of the date of deposit of the correspondence as "Express Mail." A petition to withdraw the holding of abandonment relying upon a timely reply placed in "Express Mail" must include an appropriate petition under 37 CFR 1.10(c), (d), or (e) (see MPEP § 513). When a paper is shown to have been mailed to the Office using the "Express Mail" procedures, the paper must be entered in PALM with the "Express Mail" date.

Similarly, applicants may establish that a reply was filed with a postcard receipt that properly identifies the reply and provides prima facie evidence that the reply was timely filed. See MPEP § 503. For example, if the application has been held abandoned for failure to file a reply to a first Office action, and applicant has a postcard receipt showing that an amendment was timely filed in response to the Office action, then the holding of abandonment should be withdrawn upon the filing of a petition to withdraw the holding of abandonment. When the reply is shown to have been timely filed based on a postcard receipt, the reply must be entered into PALM using the date of receipt of the reply as shown on the post card receipt. Where a certificate of mailing or transmission under 37 CFR 1.8, but not a postcard receipt, is relied upon in a petition to withdraw the holding of abandonment, see 37 CFR 1.8(b) and MPEP § 512. As stated in 37 CFR 1.8(b)(3) the statement that attests to the previous timely mailing or transmission of the correspondence must be on a personal knowledge basis, or to the satisfaction of the Director of the USPTO. If the statement attesting to the previous timely mailing is not made by the person who signed the Certificate of Mailing (i.e., there is no personal knowledge basis), then the statement attesting to the previous timely mailing should include evidence that supports the conclusion that the correspondence was actually mailed (e.g., copies of a mailing log establishing that correspondence was mailed for that application). When the correspondence is shown to have been timely filed based on a certificate of mailing, the correspondence is entered into PALM with the actual date of receipt (i.e., the date that the duplicate copy of the papers was filed with the statement under 37 CFR 1.8).

The petitioner's showing that the issue fee payment was submitted by mail, on January 4, 2005 is sufficient. The application will be forwarded to the issue branch for processing and consideration of the issue fee payment filed January 4, 2005, and a copy of which is provided as an attachment to the instant petition.

The Petition is **Granted**.

UNITED STATES PATENT AND TRADEMARK OFFICE

Technology Center 1700

Jacqueline M. Stone

Jacqueline Stone, Director
Technology Center 1700
Chemical and Materials Engineering

J. Michael Buchanan
Cantor Colburn LLP
55 Griffin Road South
Bloomfield, CT 06002

UNITED STATES PATENT AND TRADEMARK OFFICE

COMMISSIONER FOR PATENTS
UNITED STATES PATENT AND TRADEMARK OFFICE
P.O. BOX 1450
ALEXANDRIA, VA 22313-1450
www.uspto.gov

MCCARTER & ENGLISH LLP
CITYPLACE I
185 ASYLUM STREET
HARTFORD CT 06103

COPY MAILED

NOV 22 2006

OFFICE OF PETITIONS

In re Patent No. 7,067,606	:	
Issued: June 27, 2006	:	
Application No. 10/620,644	:	PATENT TERM ADJUSTMENT
Filed: July 16, 2003	:	
Dkt. No.: 883933.0088	:	

This is a decision on the "APPLICATION FOR PATENT TERM ADJUSTMENT UNDER 37 C.F.R. 1.705(d)," filed July 13, 2006.

The application for patent term adjustment ("PTA") under 37 CFR 1.705(d) is **DISMISSED**.

The above-identified application matured into U.S. Patent No. 7,067,606 on June 27, 2006. The instant request for reconsideration was timely filed July 13, 2006 in accordance with 37 C.F.R. § 1.705(d). The patent issued with a PTA of 260 days. Patentees argue that the application is entitled to an adjustment of 419 days and that there was no was failure to engage in reasonable efforts to conclude prosecution by applicants.

A review of the application history reveals that an adjustment of 338 days under 37 CFR 1.702(a)(1) can be attributed to the Office. At the time of mailing of Notice of Allowance, there were no further delays attributed to the Office.

Notice of Allowance was mailed in the instant case on October 5, 2004. Notice of Abandonment was mailed March 3, 2005. The application was held abandoned for failure to timely submit a proper reply to the Notice of Allowance. A petition to withdraw the holding of abandonment was filed March 24, 2005 and granted November 30, 2005. The holding of abandonment was withdrawn on the basis that applicants' reply to the Notice of Allowance purportedly filed January 4, 2005 bore a certificate of mailing in accordance with 37 CFR 1.8. While the response to the Notice of Allowance was deemed timely due to the fact that it bore a certificate of mailing in accordance with 37 CFR 1.8, the date of actual receipt of the reply to the Notice of Allowance is

used for all other purposes, in particular, calculation of PTA. *See*, 37 CFR 1.8(a) and 37 CFR 1.703(f). Thus, the actual date of receipt of the reply to the Notice of Allowance, March 24, 2005, must be used in the calculation of PTA.

In view thereof, at the time of Notice of Allowance the application is entitled to a patent term adjustment of 338 days, as indicated on the patent.

The required fee of $200.00 for an application for patent term adjustment has been submitted.

Any request for reconsideration of this decision must be submitted within TWO MONTHS of the mail date of this decision. Extensions of time under 37 CFR 1.136 are not available.

Telephone inquiries specific to this matter should be directed to Petitions Attorney Alesia M. Brown at (571) 272-3205.

Kery Fries

Kery Fries
Senior Legal Advisor
Office of Patent Legal Administration
Office of Deputy Commissioner
for Patent Examination Policy

UNITED STATES PATENT AND TRADEMARK OFFICE

COMMISSIONER FOR PATENTS
UNITED STATES PATENT AND TRADEMARK OFFICE
P.O. BOX 1450
ALEXANDRIA, VA 22313-1450
www.uspto.gov

Richard P. Gilly
Wolf, Block, Schorr & Solis-Cohen LLP
22nd Floor
1650 Arch Street
Philadelphia PA 19103-2097

COPY MAILED

MAR 3 0 2004

OFFICE OF PETITIONS

In re Application of
Azpitarte
Application No. 10/620,649
Filed: July 16, 2003
Attorney Docket No. CAB014-01
For: SAFETY SYSTEM FOR THE ACTUATING OF ELEVATOR LANDING DOORS

ON PETITION

This is a decision on the petition filed December 24, 2003 (certificate of mailing date December 22, 2003), requesting, in effect, that the Notice of Omitted Items in a Nonprovisional Application (Notice) mailed October 20, 2003 be withdrawn, insofar as it alleges that page 2 of the specification was omitted on filing. The petition will be treated under 37 CFR 1.53(e).

The petition under 37 CFR 1.53(e) is **dismissed**.

The application was filed on July 16, 2003. On October 20, 2003, the Office of Initial Patent Examination mailed a Notice stating that the application had been accorded a filing date of July 16, 2003, and advising applicant that page 2 of the specification appeared to have been omitted.

In response, the present petition was filed. The petition does not allege and is not accompanied by any evidence that any page of specification containing page number 2 was present in the Office on July 16, 2003.

Petitioner claims that the specification, filed July 16, 2003, was misnumbered. The first page of the specification is not numbered. The subsequent pages of specification are numbered 3 - 17.

It is obvious from a review of the petition and the application file that no page of specification was actually missing on July 16, 2003. Petitioner simply misnumbered the application papers. However, the Notice mailed October 20, 2003, was correct in stating that page 2 of the specification appeared to have been omitted. Therefore, the "Notice" was properly mailed and will not be withdrawn.

The petition to withdraw the October 20, 2003 Notice is dismissed.

Since the present petition was not necessitated by any error on the part of the Office, the $130.00 petition fee will be retained.

The application is being forwarded to Technology Center 3600 for examination in due course. The examiner of record will consider the Preliminary Amendment, filed on July 16, 2003, that corrects the pagination of the specification

Telephone inquiries concerning this decision should be directed to the undersigned at (703) 308-6712.

E. Shirene Willis

E. Shirene Willis
Senior Petitions Attorney
Office of Petitions
Office of the Deputy Commissioner
for Patent Examination Policy

UNITED STATES PATENT AND TRADEMARK OFFICE

Commissioner for Patents
United States Patent and Trademark Office
P.O. Box 1450
Alexandria, VA 22313-1450
www.uspto.gov

AIR PRODUCTS AND CHEMICALS, INC.
PATENT DEPARTMENT
7201 HAMILTON BOUEVARD
ALLENTOWN, PA 18195-1501

COPY MAILED

AUG 20 2008

In re Application of
John Joseph Rabasco et al
Application No. 10/620,654
Filed: July 16, 2003
Attorney Docket No. 06326 USA

ON PETITION

This is a decision on the petition filed May 7, 2008 under 37 CFR 1.137(b), to revive the above-identified application.

The petition is **GRANTED.**

The above-identified application became abandoned for failure to submit the Issue fee and Publication fee in a timely manner in reply to the Notice of Allowance mailed January 8, 2008, which set a statutory period for reply of three (3) months. Accordingly, the above-identified application became abandoned on April 9, 2008.

The petition satisfies the conditions for revival pursuant to the provisions of 37 CFR 1.137(b) in that (1) the reply in the form of payment of the Issue fee and Publication fee; (2) the petition fee; and (3) the required statement of unintentional delay have been received. Accordingly, the issue fee is accepted as having been unintentionally delayed.

The file does not indicate a change of address has been submitted, although the address given on the petition differs from the address of record. If appropriate, a change of address should be filed in accordance with MPEP 601.03. A courtesy copy of this decision is being mailed to the address given on the petition; however, the Office will mail all future correspondence solely to the address of record.

Telephone inquiries concerning this decision should be directed to the undersigned at (571) 272-3210. This matter is being referred to the Office of Data Management for further processing.

Irvin Dingle
Petitions Examiner
Office of Petitions

cc: Russell Brewer
2890 Fairfield Drive
Allentown, PA 18103

UNITED STATES PATENT AND TRADEMARK OFFICE

Commissioner for Patents
United States Patent and Trademark Office
P.O. Box 1450
Alexandria, VA 22313-1450
www.uspto.gov

BULLIVANT HOUSER BAILEY, PC
1415 L STREET
SUITE 1000
SACRAMENTO, CA 95814

COPY MAILED

MAY 28 2008

OFFICE OF PETITIONS

In re Application of	:	
Jerome O. BLOMBERG	:	
Application No. 10/620,673	:	DECISION ON PETITION
Filed: July 15, 2003	:	
Attorney Docket No. 30132/00002	:	

This is a decision on the petition under the unintentional provisions of 37 CFR 1.137(b), filed January 17, 2008 and supplemental petition filed May 9, 2008, to revive the above-identified application.

The petition is **GRANTED**.

The application became abandoned for failure to timely pay the issue and publication fees on or before December 10, 2007, as required by the Notice of Allowance and Fee(s) Due, mailed September 10, 2007, which set a statutory period for reply of three (3) months. Accordingly, the application became abandoned on December 11, 2007.

The petition satisfies the requirements of 37 CFR 1.137(b) in that petitioner has supplied (1) the reply in the form of payment of the Issue Fee of $720 and Publication Fee of $300; (2) the petition fee of $770; and (3) the required statement of unintentional delay.

It is not apparent whether the person signing the statement of unintentional delay was in a position to have firsthand or direct knowledge of the facts and circumstances of the delay at issue. Nevertheless, such statement is being treated as having been made as the result of a reasonable inquiry into the facts and circumstances of such delay. See 37 CFR 10.18(b) and Changes to Patent Practice and Procedure; Final Rule Notice, 62 Fed. Reg. 53131, 53178 (October 10, 1997), 1203 Off. Gaz. Pat. Office 63, 103 (October 21, 1997). In the event that such an inquiry has not been made, petitioner must make such an inquiry. If such inquiry results in the discovery that it is not correct that the entire delay in filing the required reply from the due date for the reply until the filing of a grantable petition pursuant to 37 CFR 1.137(b) was unintentional, petitioner must notify the Office.

Telephone inquiries concerning this decision should be directed to Diane Goodwyn at (571) 272-6735.

The application is being referred to the Office of Data Management for processing into a patent.

April Wise
Petitions Examiner
Office of Petitions

UNITED STATES PATENT AND TRADEMARK OFFICE

COMMISSIONER FOR PATENTS
UNITED STATES PATENT AND TRADEMARK OFFICE
P.O. BOX 1450
ALEXANDRIA, VA 22313-1450
www.uspto.gov

Paper No.

Michael I. Stewart
Sim & McBurney, 6th Floor
330 University Avneue
Toronto, ON M5G 1R7 CA CANADA

COPY MAILED

DEC 0 6 2004

OFFICE OF PETITIONS

In re Application of:	:	
Sokoll et al.	:	
Application No. 10/620,686	:	DECISION DISMISSING
Filed: July 17, 2003	:	PETITIONS UNDER
Title of Invention:	:	37 CFR 1.47(a) AND
BIODEGRADABLE TARGETABLE	:	37 CFR 1.137(b)
MICROPARTICLE DELIVERY SYSTEM	:	

This is in response to the Petitions Under 37 CFR § 1.47(a), to allow the other inventor(s) to proceed with the application on behalf of himself or herself and the nonsigning inventor(s), and 37 CFR 1.137(b), to revive the above application.

The petitions are **dismissed**.

Rule 47 applicant is given TWO (2) MONTHS from the mailing date of this decision to reply, correcting the below-noted deficiencies. Any reply should be entitled "Request for Reconsideration of Petition Under 37 CFR 1.47(a)"; should only address the deficiencies noted below, except that the reply may include an oath or declaration executed by the non-signing inventor, AND BE ADDRESSED TO petitions Attorney Derek L. Woods. Failure to respond will result in abandonment of the application. Any extensions of time will be governed by 37 CFR 1.136(a).

The above-identified application was filed on February 2, 2004, without, a fully executed oath or declaration. The Office mailed a Notice to File Missing Parts of Nonprovisional Application (hereinafter "Notice"), on October 20, 2003, requiring *inter alia*, a properly signed oath or declaration. Applicant was given two (2) months to respond to the Notice, and extensions of time under 37 CFR 1.136 were available. No reply having been received, the application became abandoned December 21, 2003.

In response to the Notice, Applicant files a petition to revive the application under 37 CFR 1.137(b), and a petition to allow

the other inventor(s) to proceed with the application on behalf of himself or herself and the nonsigning inventor(s) under 37 CFR 1.47(a).

Applicable Law

A grantable petition to revive an abandoned application under 37 CFR 1.137(b) must be accompanied by: (**1**) the required reply (unless previously filed); (**2**) the petition fee required by 37 CFR 1.17(m); (**3**) a statement that the entire delay in filing the required reply from the due date for the reply until the filing of a grantable petition pursuant to 37 CFR 1.137(b) was unintentional; and (**4**) if required, a terminal disclaimer (and fee as set forth in 37 CFR 1.20(d)).

Applicant lacks item (1),the required reply which, in this instance, is a grantable petition under 37 CFR 1.47(a).

A grantable petition under 37 CFR 1.47(a) requires: (1) proof that the non-signing inventor cannot be reached or refuses to sign the oath or declaration after having been presented with the application papers (specification, claims and drawings); (2) an acceptable oath or declaration in compliance with 35 U.S.C. §§ 115 and 116; (3) the petition fee; and (4) a statement of the last known address of the non-signing inventor. Applicant lacks item (1) set forth above.

As to item (1), where it is alleged that an applicant refuses to join an application, the applicant must establish that the nonsigning inventor was presented with the application for signature. The Manual of Patent Examining Procedure ("MPEP") states that

> A refusal by an inventor to sign an oath or declaration when the inventor has not been presented with the application papers does not itself suggest that the inventor is refusing to join the application unless it is clear that the inventor understands exactly what he or she is being asked to sign and refuses to accept the application papers. A copy of the application papers should be sent to the last known address of the nonsigning inventor, or, if the nonsigning inventor is represented by counsel, to the address of the nonsigning inventor's attorney.

MPEP 409.03(d).

The instant petition

Here, the Declaration of Reza Yacoob provides that a declaration and power of attorney were forwarded to the inventor, but there is no assertion that the application was sent to the inventor. There is also no verification that the documnents were received. Attachments sent via email require evidence of receipt by the inventor because, depending on the electronic medium, attachments are sometimes inaccessible.

The Declaration of Reza Yacoob also avers that the inventor has moved and there is no street address at which to contact the inventor. Applicant is advised that, where an inventor is unavailable (cannot be reached), while it is not required that the application be mailed, Petitioner must establish the exercise of diligent effort in trying to find or reach the nonsigning inventor. A statement of facts should be submitted that fully describes the exact facts which are relied on to establish that a *diligent effort* was made to locate the inventor. (Emphasis supplied). See, MPEP § 409.03(d). At the very least, an Internet search, or a search of telephone directories should be undertaken of the regions where it is suspected the non-signing inventor may reside. Copies of the results of such searches must be referred to in any renewed petition. It is important that the forthcoming communication contain statements of fact as opposed to conclusions. See, MPEP § 409.03(d).

Applicant must either provide confirmation that the application, sent via email, was received by the inventor, i.e., a return email from the inventor evidencing receipt of the application, or provide evidence that the inventor cannot be found or reached after diligent effort.

Further correspondence with respect to this matter should be addressed as follows:

By mail: Commissioner for Patents
PO Box 1450
Alexandria, VA 22313-1450

By FAX: (703) 872-9306
Attn: Office of Petitions

By hand: 2201 South Clark Place
Customer Window
Crystal Plaza Two, Lobby Room 1B03
Arlington, VA 22202

Telephone inquiries concerning this decision should be directed to the undersigned at (571) 272-3232.

Derek L. Woods
Attorney Advisor
Office of Petitions

UNITED STATES PATENT AND TRADEMARK OFFICE

Commissioner for Patents
United States Patent and Trademark Office
P.O. Box 1450
Alexandria, VA 22313-1450
www.uspto.gov

Michael I. Stewart
Sim & McBurney, 6th Floor
330 University Avneue
Toronto, ON M5G 1R7 CA CANADA

COPY MAILED

APR 06 2005

OFFICE OF PETITIONS

In re Application of:
Sokoll et al.
Application No. 10/620,686
Filed: July 17, 2003
Title of Invention:
BIODEGRADABLE TARGETABLE
MICROPARTICLE DELIVERY SYSTEM

DECISION GRANTING PETITION

This is a decision on the Petition to Revive the Application based upon unintentional abandonment, filed December 29, 2004.

This Petition is hereby **granted**.

The above-identified application became abandoned for failure to reply in a timely manner to the Notice to File Missing Parts of Provisional Application (hereinafter "Notice"), mailed October 20, 2003. The Notice required *inter alia*, a properly signed oath or declaration. Applicant was given two (2) months to respond to the Notice, and extensions of time under 37 CFR 1.136 were available. No reply having been received, the application became abandoned December 21, 2003. The mailing of this Decision precedes the mailing of a Notice of Abandonment.

Applicant files the instant petition, executed oath/declaration and the appropriate fees.

The application file is being referred to the Office of Initial Patent Examination for continued processing in due course.

Telephone inquiries concerning this matter should be directed to the undersigned at (571) 272-3232.

Derek L. Woods
Attorney/Advisor
Office of Petitions

UNITED STATES PATENT AND TRADEMARK OFFICE

Commissioner for Patents
United States Patent and Trademark Office
P.O. Box 1450
Alexandria, VA 22313-1450
www.uspto.gov

Michael I. Stewart
Sim & McBurney, 6th Floor
330 University Avneue
Toronto, ON M5G 1R7 CA CANADA

COPY MAILED

APR 06 2005

OFFICE OF PETITIONS

In re Application of: :
Sokoll et al. :
Application No. 10/620,686 : DECISION NOTING
Filed: July 17, 2003 : JOINDER OF INVENTOR
Title of Invention: :
BIODEGRADABLE TARGETABLE :
MICROPARTICLE DELIVERY SYSTEM :

This is in response to the Request for Renewed Petition under 37 CFR 1.47(a) and 37 CFR 1.137(b)[1], filed March 7, 2005, noting the joinder of the inventor. A one (1) month extension-of-time has been granted.

In view of the joinder of the inventor, further consideration under 37 CFR 1.47(a) is not necessary and the Reconsideration of Petition is considered to be moot. This application does not have any Rule 1.47(a) status and no such status should appear on the file wrapper. This application need not be returned to this Office for further consideration under 37 CFR 1.47(a).

The Declaration has been entered and made of record.

The application file is being referred to the Office of Initial Patent Examination for continued processing in due course.

Telephone inquiries concerning this matter should be directed to the undersigned at (571) 272-3232.

Derek L. Woods
Attorney/Advisor
Office of Petitions

[1] A Decision on the petition under 37 CFR 1.137(b) is mailed under separate cover.

UNITED STATES PATENT AND TRADEMARK OFFICE

Commissioner for Patents
United States Patent and Trademark Office
P.O. Box 1450
Alexandria, VA 22313-1450
www.uspto.gov

DICKSTEIN SHAPIRO MORIN & OSHINSKY LLP
2101 L STREET NW
WASHINGTON, DC 20037

COPY MAILED

JUN 21 2005

OFFICE OF PETITIONS

In re Application of	:
Masaki Katoh et al	:
Application No. 10/620,692	: DECISION GRANTING PETITION
Filed: July 17, 2003	: UNDER 37 CFR 1.313(c)(2)
Attorney Docket No. R2184.0097/P097-A	:

This is a decision on the petition, filed June 20, 2005, under 37 CFR 1.313(c)(2) to withdraw the above-identified application from issue after payment of the issue fee.

The petition is **GRANTED**.

The above-identified application is withdrawn from issue for consideration of a submission under 37 CFR 1.114 (request for continued examination). See 37 CFR 1.313(c)(2).

Petitioner is advised that the issue fee paid on April 14, 2005 in the above-identified application cannot be refunded. If, however, the above-identified application is again allowed, petitioner may request that it be applied towards the issue fee required by the new Notice of Allowance.[1]

Telephone inquiries should be directed to the undersigned at (571) 272-3218.

This matter is being referred to Technology Center AU 2655 for processing of the request for continued examination under 37 CFR 1.114 and for consideration of the Information Disclosure Statement.

Frances Hicks
Petitions Examiner
Office of Petitions
Office of the Deputy Commissioner
for Patent Examination Policy

---

[1] *The request to apply the issue fee to the new Notice may be satisfied by completing and returning the new Issue Fee Transmittal Form PTOL-85(b), which includes the following language thereon: "Commissioner for Patents is requested to apply the Issue Fee and Publication Fee (if any) or re-apply any previously paid issue fee to the application identified above." Petitioner is advised that, whether a fee is indicated as being due or not, the Issue Fee Transmittal Form* ***must*** *be completed and timely submitted to avoid abandonment. Note the language in bold text on the first page of the Notice of Allowance and Fee(s) Due (PTOL-85).*

UNITED STATES PATENT AND TRADEMARK OFFICE

UNITED STATES DEPARTMENT OF COMMERCE
United States Patent and Trademark Office
Address: COMMISSIONER FOR PATENTS
P.O. Box 1450
Alexandria, Virginia 22313-1450
www.uspto.gov

Jason D. Kelly
Shumaker & Sieffert, P.A.
1625 Radio Drive
Suite 300
St. Paul, MN 55125

Mail Date: 04/20/2010

Applicant	: Joseph L. Sullivan	: DECISION ON REQUEST FOR
Patent Number	: 7623915	: RECALCULATION of PATENT
Issue Date	: 11/24/2009	: TERM ADJUSTMENT IN VIEW
Appliction No	: 10/620,742	: OF WYETH AND NOTICE OF INTENT TO
Filed	: 07/16/2003	: ISSUE CERTIFICATE OF CORRECTION
		:

The Request for Recalculation is **GRANTED** to the extent indicated.

The patent term adjustment has been determined to be **1625** days. The USPTO will *sua sponte* issue a certificate of correction reflecting the amount of PTA days determined by the recalculation.

Prior to the issuance of the certificate of correction, the USPTO will afford patentee an opportunity to be heard and request reconsideration. Accordingly, patentee has **one month or thirty (30) days**, whichever is longer, to file a request for reconsideration of this patent term adjustment calculation. See 35 U.S.C. 154(b)(3)(B)(ii) and 37 CFR 1.322(a)(4). No extensions of time will be granted under 37 CFR 1.136.

Patentee should use document code PET.OP if electronically filing a request for reconsideration of this patent term adjustment calculation. The patentee must also include the information required by 37 CFR 1.705(b)(2) and the fee required by 37 CFR 1.18(e). If patentee does not file a timely request for reconsideration of this patent term adjustment calculation including the information required by 37 CFR 1.705(b)(2) and the fee required by 37 CFR 1.18(e), the USPTO will issue a certificate of correction reflecting the PTA determination noted above.

Patentee should be aware that in order to preserve the right to review in the United States District Court for the District of Columbia of the USPTO patent term adjustment determination, patentee must ensure that he or she also take the steps required under 35 U.S.C. 154(b)(4)(A) in a timely manner. Nothing in the request for recalculation should be construed as providing an alternative time frame for commencing a civil action under 35 U.S.C. 154(b)(4)(A).

Any questions concerning this decision should be directed to the Office of Patent Legal Administration at 571-272-7702.

UNITED STATES PATENT AND TRADEMARK OFFICE

Commissioner for Patents
United States Patent and Trademark Office
P.O. Box 1450
Alexandria, VA 22313-1450
www.uspto.gov

JJGJr : 11-07

COPY MAILED
DEC 10 2007
OFFICE OF PETITIONS

KLARQUIST SPARKMAN LLP
121 S.W. SALMON STREET
SUITE 1600
PORTLAND OR 97204

In re Application of	:	
Srinivasan	:	
Application No. 10/620,744	:	DECISION
Filed: 15 July, 2003	:	
Attorney Docket No. 3382-64473-01	:	

This is a decision on the petition filed on 8 August, 2007, and thereafter supplemented, and considered as a request to withdraw the holding of abandonment under 37 C.F.R. §1.181.

The petition as considered under 37 C.F.R. §1.181 is **GRANTED**.

BACKGROUND

The record reflects that:

- Petitioner failed to reply timely and properly to the non-final Office action mailed on 23 January, 2007, with reply due on or before 23 April, 2007;
- the application went abandoned after midnight 23 April, 2007;
- the Office mailed the Notice of Abandonment on 3 August, 2007;
- on 8 August, 2007, Petitioner filed the instant petition with, *inter alia*, an averment that a reply in the form of a amendment with a request and fee for extension of time had been timely and properly filed on Tuesday, 31 July , 2007, over a Monday, 23 July, 2007, certificate of mailing, accompanied by a date stamped ("JUL 31 2007") receipt card (see:

MPEP §503[1]), a copy of the required reply, such showings in documents and statement as are consistent with the guidance in the Commentary at MPEP §711.03(c))—and the record evidences charges of that date for a request and fee for extension of time, as well as the amendment.

The availability of applications and application papers online to applicants/practitioners who diligently associate their Customer Number with the respective application(s) now provides an applicant/practitioner on-demand information as to events/transactions in an application. Thus, now if one wishes to know the progress in and/or status of an application or the accuracy of the data therein, one need only look at the file online.

Out of an abundance of caution, Petitioners always are reminded that the filing of a petition under 37 C.F.R. §1.181 does not toll any periods that may be running any action by the Office and a petition seeking relief under the regulation must be filed within two (2) months of the act complained of (see: 37 C.F.R. §1.181(f)), and that those registered to practice and all others who make representations before the Office are reminded to inquire into the underlying facts of representations made to the Office and support averments with the appropriate documentation–since all owe to the Office the continuing duty to disclose.[2]

---

[1] MPEP §503 provides in pertinent part:

§503 Application Number and Filing Receipt

* * *

A return postcard should be attached to *each* patent application for which a receipt is desired. It is important that the return postcard itemize all of the components of the application. If the postcard does not itemize each of the components of the application, it will not serve as evidence that any component which was not itemized was received by the United States Patent and Trademark Office (USPTO). It should be recognized that the identification of an application by application number does not necessarily signify that the USPTO has accepted the application as complete (37 C.F.R. §1.53(a)).

* * *

RETURN POSTCARD

If a receipt of any item (e.g., paper or fee) filed in the USPTO is desired, it may be obtained by enclosing with the paper a self-addressed postcard specifically identifying the item. The USPTO will stamp the receipt date on the postcard and place it in the outgoing mail. A postcard receipt which itemizes and properly identifies the items which are being filed serves as *prima facie* evidence of receipt in the USPTO of all the items listed thereon on the date stamped thereon by the USPTO.

The identifying data on the postcard should be so complete as to clearly identify the item for which receipt is requested. For example, the postcard should identify the applicant's name, application number (if known), confirmation number (if known), filing date, interference number, title of the invention, etc. The postcard should also identify the type of paper being filed, e.g., new application, affidavit, amendment, notice of appeal, appeal brief, drawings, fees, motions, supplemental oath or declaration, petition, etc., and the number of pages being submitted. If a new application is being filed, all parts of the application being submitted should be separately listed on the postcard, e.g., the number of pages of specification (including written description, claims and abstract), number of claims, number of sheets of drawings, number of pages of oath/declaration, number of pages of cover sheet (provisional application).

The postcard receipt will not serve as *prima facie* evidence of receipt of any item which is not adequately itemized on the postcard. For example, merely listing on the postcard "a complete application" or "patent application" will not serve as a proper receipt for each of the required components of an application (e.g., specification (including claims), drawings (if necessary), oath or declaration and the application filing fee) or missing portions (e.g., pages, sheets of drawings) of an application if one of the components or portion of a component is found to be missing by the USPTO. Each separate component should be specifically and properly itemized on the postcard. Furthermore, merely incorporating by reference in the postcard receipt, the items listed in a transmittal letter will not serve as *prima facie* evidence of receipt of those items.

The person receiving the item(s) in the USPTO will check the listing on the postcard against the item(s) being filed to be sure they are properly identified and that all the items listed on the postcard are presently being submitted to the USPTO. If any of the items listed on the postcard are not being submitted to the USPTO, those items will be crossed off and the post-card initialed by the person receiving the items. Upon return of a postcard receipt from the USPTO, the postcard receipt should be promptly reviewed by the person who filed the items to ensure that every item specifically denoted on the postcard was received by the USPTO. If the postcard receipt has been annotated to indicate that a particular item denoted on the postcard was not received by the USPTO, the postcard receipt will not serve as *prima facie* evidence of receipt of that item in the USPTO. (Emphasis supplied.)

[2] See supplement of 17 June, 1999. The Patent and Trademark Office is relying on petitioner's duty of candor and good faith and accepting a statement made by Petitioner. See Changes to Patent Practice and Procedure, 62 Fed. Reg. at 53160 and 53178, 1203 Off. Gaz. Pat. Office at 88

STATUTES, REGULATIONS AND ANALYSIS

Congress has authorized the Commissioner to "revive an application if the delay is shown to the satisfaction of the Commissioner to have been "unavoidable." 35 U.S.C. §133 (1994).[3]

The regulations at 37 C.F.R. §1.137(a) and (b) set forth the requirements for a petitioner to revive a previously unavoidably or unintentionally, respectively, abandoned application under this congressional grant of authority.

The language of 35 U.S.C. §133 and 37 C.F.R. §1.137(a) is clear, unambiguous, and without qualification: the delay in tendering the reply to the outstanding Office action, as well as filing

---

and 103 (responses to comments 64 and 109)(applicant obligated under 37 C.F.R. §10.18 to inquire into the underlying facts and circumstances when providing statements to the Patent and Trademark Office).

Specifically, the regulations at 37 C.F.R. §10.18 provide:

§ 10.18 Signature and certificate for correspondence filed in the Patent and Trademark Office.
(a) For all documents filed in the Office in patent, trademark, and other non-patent matters, except for correspondence that is required to be signed by the applicant or party, each piece of correspondence filed by a practitioner in the Patent and Trademark Office must bear a signature by such practitioner complying with the provisions of §1.4(d), §1.4(e), or § 2.193(c)(1) of this chapter.
(b) By presenting to the Office (whether by signing, filing, submitting, or later advocating) any paper, the party presenting such paper, whether a practitioner or non-practitioner, is certifying that—
(1) All statements made therein of the party's own knowledge are true, all statements made therein on information and belief are believed to be true, and all statements made therein are made with the knowledge that whoever, in any matter within the jurisdiction of the Patent and Trademark Office, knowingly and willfully falsifies, conceals, or covers up by any trick, scheme, or device a material fact, or makes any false, fictitious or fraudulent statements or representations, or makes or uses any false writing or document knowing the same to contain any false, fictitious or fraudulent statement or entry, shall be subject to the penalties set forth under 18 U.S.C. 1001, and that violations of this paragraph may jeopardize the validity of the application or document, or the validity or enforceability of any patent, trademark registration, or certificate resulting therefrom; and
(2) To the best of the party's knowledge, information and belief, formed after an inquiry reasonable under the circumstances, that —
(i) The paper is not being presented for any improper purpose, such as to harass someone or to cause unnecessary delay or needless increase in the cost of prosecution before the Office;
(ii) The claims and other legal contentions therein are warranted by existing law or by a nonfrivolous argument for the extension, modification, or reversal of existing law or the establishment of new law;
(iii) The allegations and other factual contentions have evidentiary support or, if specifically so identified, are likely to have evidentiary support after a reasonable opportunity for further investigation or discovery; and
(iv) The denials of factual contentions are warranted on the evidence, or if specifically so identified, are reasonably based on a lack of information or belief.
(c) Violations of paragraph (b)(1) of this section by a practitioner or non-practitioner may jeopardize the validity of the application or document, or the validity or enforceability of any patent, trademark registration, or certificate resulting therefrom. Violations of any of paragraphs (b)(2)(i) through (iv) of this section are, after notice and reasonable opportunity to respond, subject to such sanctions as deemed appropriate by the Commissioner, or the Commissioner's designee, which may include, but are not limited to, any combination of —
(1) Holding certain facts to have been established;
(2) Returning papers;
(3) Precluding a party from filing a paper, or presenting or contesting an issue;
(4) Imposing a monetary sanction;
(5) Requiring a terminal disclaimer for the period of the delay; or
(6) Terminating the proceedings in the Patent and Trademark Office.
(d) Any practitioner violating the provisions of this section may also be subject to disciplinary action. See § 10.23(c)(15).
[Added 50 FR 5175, Feb. 6, 1985, effective Mar. 8, 1985; para. (a) revised, 58 FR 54494, Oct. 22, 1993, effective Nov. 22, 1993; paras. (a) & (b) revised, paras. (c) & (d) added, 62 FR 53131, Oct. 10, 1997, effective Dec. 1, 1997; para. (a) revised, 69 FR 56481, Sept. 21, 2004, effective Oct. 21, 2004]

[3] 35 U.S.C. §133 provides:
35 U.S.C. §133 Time for prosecuting application.
Upon failure of the applicant to prosecute the application within six months after any action therein, of which notice has been given or mailed to the applicant, or within such shorter time, not less than thirty days, as fixed by the Commissioner in such action, the application shall be regarded as abandoned by the parties thereto, unless it be shown to the satisfaction of the Commissioner that such delay was unavoidable.

the first petition seeking revival, must have been unavoidable for the reply now to be accepted on petition.[4]

Delays in responding properly raise the question whether delays are unavoidable.[4] Where there is a question whether the delay was unavoidable, Petitioners must meet the burden of establishing that the delay was unavoidable within the meaning of 35 U.S.C. §133 and 37 C.F.R. §1.137(a).[5]

And the Petitioner must be diligent in attending to the matter.[6] Failure to do so does not constitute the care required under Pratt, and so cannot satisfy the test for diligence and due care.

(By contrast, unintentional delays are those that do not satisfy the very strict statutory and regulatory requirements of unavoidable delay, and also, by definition, are not intentional.[7]))

Allegations as to the Request to
Withdraw the Holding of Abandonment

The courts have determined the construct for properly supporting a petition seeking withdrawal of a holding of abandonment.[8]

The commentary at MPEP §711.03(c) provides in pertinent part:

* * *

> **B. Petition To Withdraw Holding of Abandonment Based on Evidence That a Reply Was Timely Mailed or Filed**
>
> 37 C.F.R. §1.10(c) through §1.10(e) and §1.10(g) set forth procedures for petitioning the Director of the USPTO to accord a filing date to correspondence as of the date of deposit of the correspondence as "Express Mail." A petition to withdraw the holding of abandonment relying upon a timely reply placed in

---

[4] See: *Changes to Patent Practice and Procedure*; *Final Rule Notice*, 62 *Fed. Reg.* at 53158-59 (October 10, 1997), 1203 *Off. Gaz. Pat. Office* at 86-87 (October 21, 1997).

[5] See: In re Application of G, 11 USPQ2d 1378, 1380 (Comm'r Pats. 1989).

[6] See: Diligence in Filing Petitions to Revive and Petitions to Withdraw the Holding of Abandonment, 1124 Off. Gaz. Pat. Office 33 (March 19, 1991). It was and is Petitioner's burden to exercise diligence in seeking either to have the holding of abandonment withdrawn or the application revived. See 1124 Off. Gaz. Pat. Office supra.

[7] Therefore, by example, an unintentional delay in the reply might occur if the reply and transmittal form are to be prepared for shipment by the US Postal Service, but other pressing matters distract one's attention and the mail is not timely deposited for shipment.

[8] See: Delgar v. Schulyer, 172 USPQ 513 (D.D.C. 1971).

"Express Mail" must include an appropriate petition under 37 C.F.R. §1.10(c), (d), * (e), or (g) (see MPEP § 513). When a paper is shown to have been mailed to the Office using the "Express Mail" procedures, the paper must be entered in PALM with the "Express Mail" date.

Similarly, applicants may establish that a reply was filed with a postcard receipt that properly identifies the reply and provides *prima facie* evidence that the reply was timely filed. See MPEP § 503. For example, if the application has been held abandoned for failure to file a reply to a first Office action, and applicant has a postcard receipt showing that an amendment was timely filed in response to the Office action, then the holding of abandonment should be withdrawn upon the filing of a petition to withdraw the holding of abandonment. When the reply is shown to have been timely filed based on a postcard receipt, the reply must be entered into PALM using the date of receipt of the reply as shown on the post card receipt.

Where a certificate of mailing under 37 C.F.R. §1.8, but not a postcard receipt, is relied upon in a petition to withdraw the holding of abandonment, see 37 C.F.R. §1.8(b) and MPEP § 512. As stated in 37 C.F.R §1.8(b)(3) the statement that attests to the previous timely mailing or transmission of the correspondence must be on a personal knowledge basis, or to the satisfaction of the Director of the USPTO. If the statement attesting to the previous timely mailing is not made by the person who signed the Certificate of Mailing (i.e., there is no personal knowledge basis), then the statement attesting to the previous timely mailing should include evidence that supports the conclusion that the correspondence was actually mailed (e.g., copies of a mailing log establishing that correspondence was mailed for that application). When the correspondence is shown to have been timely filed based on a certificate of mailing, the correspondence is entered into PALM with the actual date of receipt (i.e., the date that the duplicate copy of the papers was filed with the statement under 37 C.F.R. §1.8).

37 C.F.R. §1.8(b) also permits applicant to notify the Office of a previous mailing or transmission of correspondence and submit a statement under 37 C.F.R. 1.8(b)(3) accompanied by a duplicate copy of the correspondence when a reasonable amount of time (e.g., more than one month) has elapsed from the time of mailing or transmitting of the correspondence. Applicant does not have to wait until the application becomes abandoned before notifying the

> Office of the previous mailing or transmission of the correspondence. Applicant should check the private Patent Application Information Retrieval (PAIR) system for the status of the correspondence before notifying the Office. See MPEP § 512.
>
> * * *

And the regulation requires that relief be sought within two (2) months of the act complained of.

Petitioner appears to have satisfied the showing requirements herein.

CONCLUSION

Petitioner appears to have satisfied the burdens herein, and the petition as considered under 37 C.F.R. §1.181 is **granted** and the 3 August, 2007, Notice of Abandonment is **vacated**.

The instant application is released to Technology Center 1700 for further processing in due course.

While telephone inquiries regarding this decision may be directed to the undersigned at (571) 272-3214, it is noted that all practice before the Office is in writing (see: 37 C.F.R. §1.2[9]) and the proper authority for action on any matter in this regard are the statutes (35 U.S.C.), regulations (37 C.F.R.) and the commentary on policy (MPEP). Therefore, no telephone discussion may be controlling or considered authority for Petitioner's action(s).

John J. Gillon, Jr.
Senior Attorney
Office of Petitions

[9] The regulations at 37 C.F.R. §1.2 provide:
§1.2 Business to be transacted in writing.
All business with the Patent and Trademark Office should be transacted in writing. The personal attendance of applicants or their attorneys or agents at the Patent and Trademark Office is unnecessary. The action of the Patent and Trademark Office will be based exclusively on the written record in the Office. No attention will be paid to any alleged oral promise, stipulation, or understanding in relation to which there is disagreement or doubt.

UNITED STATES PATENT AND TRADEMARK OFFICE

Commissioner for Patents
United States Patent and Trademark Office
P.O. Box 1450
Alexandria, VA 22313-1450
www.uspto.gov

OCT 25 2005

CROWELL & MORNING, LLP
INTELLECTUAL PROPERTY GROUP
P. O. BOX 14300
WASHINGTON, DC 20044-4300

In re Application of	:
Manfred Galle et al	:
Serial No.: 10/620,759	: PETITION DECISION
Filed: July 17, 2003	:
Attorney Docket No.: 029300.52497US	:

This is in response to the petition under 37 CFR 1.144, filed September 6, 2005, requesting withdrawal of an improper restriction requirement.

BACKGROUND

A review of the file history shows that this application was filed under 35 U.S.C. 111 on June 11, 2000, and contained claims 1-18. In a first Office action, mailed September 13, 2004, the examiner set forth a restriction requirement, as follows:

> Group I – Claims 1-13, drawn to a composition;
> Group II – Claims 14-18, drawn to a method for inhibiting maldigestion.

The examiner provided appropriate reasoning for restriction. The examiner indicted that if the product claims were ultimately found allowable, method claims of the same scope would be rejoined.

Applicants replied on September 30, 2004, electing Group I and traversing the restriction requirement on the basis that the process cannot be practiced with another product.

The examiner mailed a new Office action to applicants on December 10, 2004, acknowledging the election of Group I and the traversal and responding thereto, maintaining the requirement for the reasons set forth and making it Final. Claims 1-13 were then rejected under 35 U.S.C. 103(a) over Sipos in view of Ogawa et al.

Applicants replied on March 10, 2005, providing a new claim set (no apparent amendments) and arguing the rejection of record and continuing the traversal of the restriction requirement for the same reasons.

The examiner mailed a Final Office action to applicants on June 6, 2005, maintaining the rejection of record under 35 U.S.C. 103(a) and the restriction requirement for the same reasons as previously set forth..

This petition was filed on September 6, 2005, concurrently with a reply to the Office action. It appears no action has been taken on the reply at present.

DISCUSSION

A review of the restriction requirement shows that the examiner divided the claims according to whether a product or process was being claimed. It is well established that restriction between statutory classes of invention is proper. Nothing in the reasoning of the examiner is improper in justifying the restriction requirement. The examiner has also indicated that rejoinder of method claims with elected product claims will be considered and effected upon determination that the product claims are allowable. Such has not yet happened. Should the product claims be found allowable over the prior art, the method claims will be rejoined and examined with respect to all aspects of the statute to determine their patentability.

DECISION

The petition is **DENIED**.

The application will be forwarded to the examiner for consideration of the amendment after Final rejection filed concurrently with the petition. Applicants remain under obligation to provide an appropriate reply to the Final Office action.

Should there be any questions about this decision please contact William R. Dixon, Jr., by letter addressed to Director, TC 1600, at the address listed above, or by telephone at 571-272-0519 or by facsimile sent to the general Office facsimile number, 571-273-8300.

Bruce M. Kisliuk
Director, Technology Center 1600

UNITED STATES PATENT AND TRADEMARK OFFICE

COMMISSIONER FOR PATENTS
UNITED STATES PATENT AND TRADEMARK OFFICE
P.O. BOX 1450
ALEXANDRIA, VA 22313-1450
www.uspto.gov

STITES & HARBISON PLLC
1199 NORTH FAIRFAX STREET
SUITE 900
ALEXANDRIA VA 22314

COPY MAILED

JUL 27 2006

OFFICE OF PETITIONS

In re Application of :
Weigold, et al. :
Application No. 10/620,769 :
Filed: July 17, 2003 :
Attorney Docket No. P07693US01/RFH :
For: SYNCHRONIZED MULTICHANNEL
UNIVERSAL SERIAL BUS

ON PETITION

This is a decision on the petition, filed March 28, 2006, under 37 CFR 1.182 requesting a change to the order of inventors.

The petition is GRANTED.

The order of inventors will be:

FOSTER
GOLDSMITH
KLOVEKORN
WEIGOLD

A replacement filing receipt is enclosed.

After the mailing of this decision, the application file will be returned to Technology Center AU 2182.

Telephone inquiries concerning this matter may be directed to the undersigned at (571) 272-3230.

Shirene Willis Brantley
Senior Petitions Attorney
Office of Petitions

enclosure: replacement filing receipt

UNITED STATES PATENT AND TRADEMARK OFFICE

UNITED STATES DEPARTMENT OF COMMERCE
United States Patent and Trademark Office
Address: COMMISSIONER FOR PATENTS
P.O. Box 1450
Alexandria, Virginia 22313-1450
www.uspto.gov

APPL NO.	FILING OR 371 (c) DATE	ART UNIT	FIL FEE REC'D	ATTY.DOCKET NO	DRAWINGS	TOT CLMS	IND CLMS
10/620,769	07/17/2003	2182	1150	P07693US01/RFH	6	50	13

CONFIRMATION NO. 9158

REPLACEMENT FILING RECEIPT

OC000000019651719

00881
STITES & HARBISON PLLC
1199 NORTH FAIRFAX STREET
SUITE 900
ALEXANDRIA, VA 22314

Date Mailed: 07/18/2006

Receipt is acknowledged of this regular Patent Application. It will be considered in its order and you will be notified as to the results of the examination. Be sure to provide the U.S. APPLICATION NUMBER, FILING DATE, NAME OF APPLICANT, and TITLE OF INVENTION when inquiring about this application. Fees transmitted by check or draft are subject to collection. Please verify the accuracy of the data presented on this receipt. **If an error is noted on this Filing Receipt, please mail to the Commissioner for Patents P.O. Box 1450 Alexandria Va 22313-1450. Please provide a copy of this Filing Receipt with the changes noted thereon. If you received a "Notice to File Missing Parts" for this application, please submit any corrections to this Filing Receipt with your reply to the Notice. When the USPTO processes the reply to the Notice, the USPTO will generate another Filing Receipt incorporating the requested corrections (if appropriate).**

Applicant(s)

Peter Graham Foster, Belair, AUSTRALIA;
Clive Alexander Goldsmith, Northfield, AUSTRALIA;
Patrick Klovekorn, Myrtle Bank, AUSTRALIA;
Adam Mark Weigold, Unley, AUSTRALIA;

Power of Attorney: The patent practitioners associated with Customer Number **000881**.

Domestic Priority data as claimed by applicant

This appln claims benefit of 60/396,099 07/17/2002

Foreign Applications

If Required, Foreign Filing License Granted: 10/20/2003

The country code and number of your priority application, to be used for filing abroad under the Paris Convention, is US10/620,769

Projected Publication Date: Not Applicable

Non-Publication Request: No

Early Publication Request: No

**** SMALL ENTITY ****

Title

Synchronized multichannel universal serial bus

Preliminary Class

710

PROTECTING YOUR INVENTION OUTSIDE THE UNITED STATES

Since the rights granted by a U.S. patent extend only throughout the territory of the United States and have no effect in a foreign country, an inventor who wishes patent protection in another country must apply for a patent in a specific country or in regional patent offices. Applicants may wish to consider the filing of an international application under the Patent Cooperation Treaty (PCT). An international (PCT) application generally has the same effect as a regular national patent application in each PCT-member country. The PCT process **simplifies** the filing of patent applications on the same invention in member countries, but **does not result** in a grant of "an international patent" and does not eliminate the need of applicants to file additional documents and fees in countries where patent protection is desired.

Almost every country has its own patent law, and a person desiring a patent in a particular country must make an application for patent in that country in accordance with its particular laws. Since the laws of many countries differ in various respects from the patent law of the United States, applicants are advised to seek guidance from specific foreign countries to ensure that patent rights are not lost prematurely.

Applicants also are advised that in the case of inventions made in the United States, the Director of the USPTO must issue a license before applicants can apply for a patent in a foreign country. The filing of a U.S. patent application serves as a request for a foreign filing license. The application's filing receipt contains further information and guidance as to the status of applicant's license for foreign filing.

Applicants may wish to consult the USPTO booklet, "General Information Concerning Patents" (specifically, the section entitled "Treaties and Foreign Patents") for more information on timeframes and deadlines for filing foreign patent applications. The guide is available either by contacting the USPTO Contact Center at 800-786-9199, or it can be viewed on the USPTO website at http://www.uspto.gov/web/offices/pac/doc/general/index.html.

For information on preventing theft of your intellectual property (patents, trademarks and copyrights), you may wish to consult the U.S. Government website, http://www.stopfakes.gov. Part of a Department of Commerce initiative, this website includes self-help "toolkits" giving innovators guidance on how to protect intellectual property in specific countries such as China, Korea and Mexico. For questions regarding patent enforcement issues, applicants may call the U.S. Government hotline at 1-866-999-HALT (1-866-999-4158).

LICENSE FOR FOREIGN FILING UNDER
Title 35, United States Code, Section 184
Title 37, Code of Federal Regulations, 5.11 & 5.15

GRANTED

The applicant has been granted a license under 35 U.S.C. 184, if the phrase "IF REQUIRED, FOREIGN FILING LICENSE GRANTED" followed by a date appears on this form. Such licenses are issued in all applications where the conditions for issuance of a license have been met, regardless of whether or not a license may be required as set forth in 37 CFR 5.15. The scope and limitations of this license are set forth in 37 CFR 5.15(a) unless an earlier license has been issued under 37 CFR 5.15(b). The license is subject to revocation upon written notification. The date indicated is the effective date of the license, unless an earlier license of similar scope has been granted under 37 CFR 5.13 or 5.14.

This license is to be retained by the licensee and may be used at any time on or after the effective date thereof

unless it is revoked. This license is automatically transferred to any related applications(s) filed under 37 CFR 1.53(d). This license is not retroactive.

The grant of a license does not in any way lessen the responsibility of a licensee for the security of the subject matter as imposed by any Government contract or the provisions of existing laws relating to espionage and the national security or the export of technical data. Licensees should apprise themselves of current regulations especially with respect to certain countries, of other agencies, particularly the Office of Defense Trade Controls, Department of State (with respect to Arms, Munitions and Implements of War (22 CFR 121-128)); the Bureau of Industry and Security, Department of Commerce (15 CFR parts 730-774); the Office of Foreign Assets Control, Department of Treasury (31 CFR Parts 500+) and the Department of Energy.

NOT GRANTED

No license under 35 U.S.C. 184 has been granted at this time, if the phrase "IF REQUIRED, FOREIGN FILING LICENSE GRANTED" DOES NOT appear on this form. Applicant may still petition for a license under 37 CFR 5.12, if a license is desired before the expiration of 6 months from the filing date of the application. If 6 months has lapsed from the filing date of this application and the licensee has not received any indication of a secrecy order under 35 U.S.C. 181, the licensee may foreign file the application pursuant to 37 CFR 5.15(b).

DEC 16 2003

DECLARATION FOR USA PATENT APPLICATION

(including Design and National Stage PCT) Attorney's Docket ID: P07693US01

As a below named inventor, I hereby declare that:
My residence, post office address and citizenship are as stated below adjacent to my name. I believe I am the original, first and sole inventor (if only one name is listed below) or an original, first and joint inventor (if plural names are listed below) of the subject matter which is claimed and for which a patent is sought

on the invention entitled: SYNCHRONIZED MULTICHANNEL UNIVERSAL SERIAL BUS

the specification of which:

___ is attached hereto.
(or)
X was filed on 17 July 2003 as U.S. Application No. or PCT International Application No. 10/620,769

and (if applicable) was amended on _____.

I hereby state that I have reviewed and understand the contents of the above-identified specification, including the claims, as amended by any amendment specifically referred to above. I acknowledge the duty to disclose information which is material to patentability as defined in 37 CFR 1.56.

I hereby claim foreign priority benefits under 35 U.S.C. 119(a)-(d) or 365(b) of any foreign application(s) for patent or inventor's certificate, or 365(a) of any PCT International application which designated at least one country other than the United States of America, listed below and have also identified below, where priority is not claimed, any foreign application for patent or inventor's certificate, or any PCT International application, having a filing date before that of the application on which priority is claimed. (__ ADDITIONAL APPLICATIONS IDENTIFIED ON ATTACHED SHEET)

Prior Foreign Application No.	Country	Day/Month/Year Filed	Priority Not Claimed

I hereby claim the benefit under 35 U.S.C. 120 of any U.S. application(s), or 365(c) of any PCT application designating the U.S., listed below; and insofar as the subject matter of each claims of this application is not disclosed in the prior U.S. or PCT application in the manner provided by the first paragraph of 35 U.S.C. 112, I acknowledge the duty to disclose information which is material to patentability as defined in 37 CFR 1.56 which became available between the filing date of the prior application and the national or PCT filing date of this application. (___ ADDITIONAL APPLICATIONS IDENTIFIED ON ATTACHED SHEET.)

U.S. or PCT Parent Application No.	Parent Filing Date (Day/Month/Year)	Parent Patent No. (if applicable)
60/396,099	17/07/02	

As a named inventor, I hereby appoint the registered practitioners of **LARSON & TAYLOR** associated with Customer Number **000881** to prosecute this application and to transact all business in the Patent and Trademark Office connected therewith. Direct all correspondence to that Customer Number.

Direct all telephone calls to _____,
at TEL (703) 739-4900 (Fax: 703-739-9577) e-mail:

I hereby declare that all statements made herein of my own knowledge are true and that all statements made on information and belief are believed to be true; and further that these statements were made with the knowledge that willful false statements and the like so made are punishable by fine or imprisonment, or both, under 18 U.S.C. 1000 and that such willful false statements may jeopardize the validity of the application or any patent issued thereon.

SOLE OR FIRST INVENTOR (4)	Citizenship AUSTRALIAN
Given Name (first and middle [if any]) Adam Mark	Family Name or Surname WEIGOLD
Full Post Office Address 35 Roberts Street, Unley SA 5061 AUSTRALIA	
Residence - City, State/Country (if different from PO address)	
SIGN AND DATE HERE Inventor's Signature	Date 29/11/03

SECOND JOINT INVENTOR (if any) (3)	Citizenship ~~GERMAN~~ AUSTRALIAN PK 1/8/03
Given Name (first and middle [if any]) Patrick	Family Name or Surname KLOVEKORN
Full Post Office Address 2 Hallam Street Myrtle Bank SA 5064 AUSTRALIA	
Residence - City, State/Country (if different from PO address)	
SIGN AND DATE HERE Inventor's Signature	Date 1/8/03

Order of inventors has changed see ref. dec. etc.

THIRD JOINT INVENTOR (if any)		Citizenship	AUSTRALIAN
Given Name (first and middle [if any])	Peter Graham	Family Name or Surname	FOSTER
Full Post Office Address	17 Neate Avenue Belair SA 5052 AUSTRALIA		
Residence - City, State/Country (if different from PO address)			
SIGN AND DATE HERE Inventor's Signature		Date	21/7/03

FOURTH JOINT INVENTOR (if any)		Citizenship	AUSTRALIAN
Given Name (first and middle [if any])	Clive Alexander	Family Name or Surname	GOLDSMITH
Full Post Office Address	18 Barnes Avenue Northfield SA 5085 AUSTRALIA		
Residence - City, State/Country (if different from PO address)			
SIGN AND DATE HERE Inventor's Signature		Date	29/11/03

UNITED STATES PATENT AND TRADEMARK OFFICE

Commissioner for Patents
United States Patent and Trademark Office
P.O. Box 1450
Alexandria, VA 22313-1450
www.uspto.gov

DICKSTEIN SHAPIRO MORIN & OSHINSKY
2101 L STREET, NW
WASHINGTON, DC 20037

COPY MAILED

DEC 1 6 2005

OFFICE OF PETITIONS

In re Application of	:
John Louis Janning	:
Application No. 10/620,771	: DECISION ON PETITION
Filed: July 17, 2003	: UNDER 37 CFR 1.78(a)(3)
Attorney Docket No. J5460.0009/P009-A	:

This is a decision on the petition, filed September 29, 2005, which is being treated under 37 CFR 1.78(a)(3), to accept an unintentionally delayed claim under 35 U.S.C. § 120 for the benefit of priority to the prior-filed nonprovisional applications set forth in the concurrently filed amendment.

The petition is **GRANTED**.

A petition for acceptance of a claim for late priority under 37 CFR 1.78(a)(3) is only applicable to those applications filed on or after November 29, 2000. Further, the petition is appropriate only after the expiration of the period specified in 37 CFR 1.78(a)(2)(ii). In addition, the petition under 37 CFR 1.78(a)(3) must be accompanied by:

(1) the reference required by 35 U.S.C. § 120 and 37 CFR 1.78(a)(2)(i) of the prior-filed application, unless previously submitted;
(2) the surcharge set forth in § 1.17(t); and
(3) a statement that the entire delay between the date the claim was due under 37 CFR 1.78(a)(2)(ii) and the date the claim was filed was unintentional. The Commissioner may require additional information where there is a question whether the delay was unintentional.

The instant nonprovisional application was filed after November 29, 2000, and the claim herein for the benefit of priority to the prior-filed nonprovisional applications is submitted after expiration of the period specified in 37 CFR 1.78(a)(2)(ii). Therefore, this is a proper petition under 37 CFR 1.78(a)(3).

The petition complies with the requirements for a grantable petition under 37 CFR 1.78(a)(3) in that (1) a reference to the prior-filed nonprovisional applications has been included in an amendment to the first sentence of the specification following the title, as provided by 37 CFR

1.78(a)(2)(iii); (2) the surcharge fee required by 37 CFR 1.17(t) has been submitted; and (3) the petition contains a proper statement of unintentional delay. Accordingly, having found that the instant petition for acceptance of an unintentionally delayed claim for the benefit of priority under 35 U.S.C. § 120 to the prior-filed nonprovisional applications satisfies the conditions of 37 CFR 1.78(a)(3), the petition is granted.

The granting of the petition to accept the delayed benefit claim to the prior-filed applications under 37 CFR 1.78(a)(3) should not be construed as meaning that the instant application is entitled to the benefit of the prior-filed applications. In order for the instant application to be entitled to the benefit of the prior-filed applications, all other requirements under 35 U.S.C. § 120 and 37 CFR 1.78(a)(1) and (a)(2) must be met. Similarly, the fact that the corrected Filing Receipt accompanying this decision on petition includes the prior-filed applications should not be construed as meaning that applicant is entitled to the claim for benefit of priority to the prior-filed applications noted thereon. Accordingly, the examiner will, in due course, consider this benefit claim and determine whether the instant application is entitled to the benefit of the earlier filing date.

A corrected Filing Receipt, which includes the priority claim to the prior-filed nonprovisional applications, accompanies this decision on petition.

Any inquiries concerning this decision may be directed to Wan Laymon (571) 272-3220. All other inquiries concerning either the examination procedures or status of the application should be directed to the Technology Center.

This matter is being referred to Technology Center Art Unit 2875 for appropriate action on the amendment filed September 20, 2005, including consideration by the examiner of applicants' entitlement to claim benefit of priority under 35 U.S.C. § 120 to the prior-filed nonprovisional applications.

Frances Hicks

Frances Hicks
Lead Petitions Examiner
Office of Petitions

ATTACHMENT: Corrected Filing Receipt

UNITED STATES PATENT AND TRADEMARK OFFICE

Commissioner for Patents
United States Patent and Trademark Office
P.O. Box 1450
Alexandria, VA 22313-1450
www.uspto.gov

PAMELA J. SISSON
PATENT DEPARTMENT
E2NA, MONSANTO COMPANY
800 N. LINDBERGH BLVD.
ST. LOUIS, MO 63167

COPY MAILED

MAY 30 2007

OFFICE OF PETITIONS

In re Application of	:	
Jack E. Tabaska	:	
Application No. 10/620,796	:	DECISION ON PETITION
Filed: July 16, 2003	:	
Attorney Docket No. 38-21(52529)B	:	

This is a decision on the petition under the unintentional provisions of 37 CFR 1.137(b), filed January 29, 2007, to revive the above-identified application.

The petition is **GRANTED**.

The application became abandoned for failure to reply in a timely manner to the non-final Office action mailed, May 18, 2006, which set a shortened statutory period for reply of three (3) months. No extensions of time under the provisions of 37 CFR 1.136(a) were obtained. Accordingly, the application became abandoned on August 19, 2006.

The petition satisfies the requirements of 37 CFR 1.137(b) in that petitioner has supplied (1) the reply in the form of an amendment, (2) the petition fee of $1500; and (3) a proper statement of unintentional delay.

It is not apparent whether the person signing the instant petition was ever given a power of attorney or authorization of agent to prosecute the above-identified application. In accordance with 37 CFR 1.34(a), the signature appearing on the petition shall constitute a representation to the United States Patent and Trademark Office that he/she is authorized to represent the particular party in whose behalf he/she acts. Telephone inquiries concerning this decision should be directed to April Wise (571) 272-1642.

This application is being referred to Technology Center AU 1631 for appropriate action by the Examiner in the normal course of business on the reply received January 29, 2007.

Irvin Dingle
Petitions Examiner
Office of Petitions

UNITED STATES PATENT AND TRADEMARK OFFICE

COMMISSIONER OF PATENTS

March 21, 2005

Arthur J. Steiner
McDermott Will & Emery
600 13th St., N. W.
Washington, D. C. 20005-3096

In re Application of:
Takeshi Kawasaki, et al
Serial No: 10/620,805 On Petition
Filing Date: July 17, 2003
For: **HETERO-JUNCTION BIPOLAR TRANSISTOR AND THE METHOD FOR PRODUCING THE SAME**

In response to the petition received June 3, 2004, to withdraw the holding of abandonment in the above application.

The petition is Granted.

The above-identified application became abandoned for failure to reply with the meaning of 37 C.D.R 1.113 in a timely manner to the Notice to File Missing Parts of Nonprovisional Application mailed August 16, 2003. Which set forth a shortened statutory period for reply of two months. Accordingly, the above-identified application became abandoned October 17, 2003.

The application will be completed with the documents received on June 3, 2004 and released to Technology Center 2811.

The office regrets any inconvenience this may have caused the client.

Telephone inquiries concerning this application may be directed to Doshie E. Day (703) 308-3640.

Doshie E. Day
Program Management Assistant
Office of Initial Patent Examination

SPE RESPONSE FOR CERTIFICATE OF CORRECTION

Paper No.: _____

DATE : 8/2/05

TO SPE OF : ART UNIT 1652

SUBJECT : Request for Certificate of Correction on Patent No.: 6,908 758

A response is requested with respect to the accompanying request for a certificate of correction.

Please complete this form and return with file, within 7 days to:
Certificates of Correction Branch - PK 3-915
Palm location 7580 - Tel. No. 305-8309

With respect to the change(s) requested, correcting Office and/or Applicant's errors, should the patent read as shown in the certificate of correction? No new matter should be introduced, nor should the scope or meaning of the claims be changed.

Thank You For Your Assistance

Monique
Certificates of Correction Branch

The request for issuing the above-identified correction(s) is hereby:
Note your decision on the appropriate box.

- ☐ Approved — All changes apply.
- ☐ Approved in Part — Specify below which changes do not apply.
- ☒ Denied — State the reasons for denial below.

Comments:

Applicant needs to file a Rule 324 petition, which is currently lacking in application.
No other petition to change Inventorship has
Can be found in the application file Ex. Manshipouri

SPE

1656
Art Unit

PTOL-306 (REV. 7/03)

U.S. DEPARTMENT OF COMMERCE Patent and Trademark Off

- UNITED STATES PATENT AND TRADEMARK OFFICE

Commissioner for Patents
United States Patent and Trademark Office
P.O. Box 1450
Alexandria, VA 22313-145

FEB 23 2005

MAILED

FEB 23 2005

OFFICE OF THE DIRECTOR
TC 3600

John W. Hayes
P.O. Box 365
Arlington Heights, IL 60006-0365

In re application of
William R. McKinley
Application No. 10/620,867
Filed: July 16, 2003
For: DEVICE FOR DISPLAYING LENTICULAR DISPLAYS

DECISION ON REQUEST FOR WITHDRAWAL OF ATTORNEY

This is a decision on the request filed on December 06, 2004, under 37 CFR 1.36 and MPEP 402.06, requesting permission to withdraw as the attorney of record in the above-identified application.

The request is **NOT APPROVED as Moot**.

Under 37 CFR 1.36 an attorney may withdraw only upon application to and approval by the Commissioner. It should be noted that a withdrawal is effective when approved, not when filed. Besides giving due notice to his or her client and delivering to the client all papers and property to which the client is entitled as specified under 37 CFR 10.40, approval of such a request requires that the following conditions be met:

A) Each attorney of record must sign the notice of withdrawal, or the notice must contain a clear indication of one attorney signing on behalf of another, because the Office does not recognize law firms;

B) A proper reason for the withdrawal as enumerated in 37 CFR 10.40(b) or subsection (1)-(6) of 37 CFR 10.40(c) must be provided; and

C) If withdrawal is requested in accordance with 37 CFR 10.40(c) above, there must be at least 30 days between approval of the withdrawal and the later of the expiration date of a time period for reply or the expiration date of the period which can be obtained by a petition and fee for extension of time under 37 CFR 1.136(a).

The request to withdraw as attorney in this application is not approved as moot because a revocation to Barnes & Thornburg and a new power of attorney appointing John W. Hayes were submitted to the United States Patent and Trademark Office on December 3, 2004. The power of attorney therefore has already been withdrawn as per the Notice to that effect mailed January 25, 2005.

Steven N. Meyers
Special Programs Examiner
Patent Technology Center 3600
(703) 308-3868

SNM/pav: 02/08/05

CC: David C. Brezina
Barnes & Thornburg
P.O. Box 2786
Chicago, IL 60690-2786

UNITED STATES PATENT AND TRADEMARK OFFICE

COMMISSIONER FOR PATENTS
UNITED STATES PATENT AND TRADEMARK OFFICE
P.O. BOX 1450
ALEXANDRIA, VA 22313-1450
www.uspto.gov

JOHN W HAYES
P.O. BOX 365
ARLINGTON HEIGHTS IL 60006-0365

COPY MAILED

MAR 2 0 2007

OFFICE OF PETITIONS

In re Application of :
McKinley :
Application No.: 10/620,867 : DECISION ON PETITION
Filing Date: July 16, 2003 : UNDER 37 CFR 1.137(b)
Attorney Docket No.: 923607-94612 :

This is a decision on the petition under 37 CFR 1.137(b), filed December 18, 2006, to revive the above-identified application.

The petition is **GRANTED.**

The above-identified application became abandoned for failure to submit the issue fee and publication fee in a timely manner in reply to the Notice of Allowance mailed April 21, 2006, which set a statutory period for reply of three (3) months. Accordingly, by operation of law, the above-identified application became abandoned on July 21, 2006.

The petition satisfies the conditions for revival pursuant to the provisions of 37 CFR 1.137(b) in that (1) the reply in the form of payment of the issue fee and publication fee; (2) the petition fee; and (3) the required statement of unintentional delay have been received. Accordingly, the payment of the issue fee and publication fee is accepted as having been unintentionally delayed.

This application is being referred to the Office of Publications.

Telephone inquiries concerning this decision should be directed to the undersigned at (571) 272-3301.

Daniel Stemmer
Legal Examiner
Office of the Deputy Commissioner
for Patent Examination Policy

UNITED STATES PATENT AND TRADEMARK OFFICE

Commissioner for Patents
United States Patent and Trademark Office
P.O. Box 1450
Alexandria, VA 22313-1450
www.uspto.gov
DIW Aug-05

DAVID L. GARRISON
GARRISON & ASSOCIATES PS
SUITE 3300
2001 SIXTH AVENUE
SEATTLE WA 98121-2522

COPY MAILED
AUG 1 2 2005
OFFICE OF PETITIONS

In re Application of	:	
Akimoto et al.	:	
Application No. 10/620,879	:	DECISION ON PETITION
Filed: 15 July, 2003	:	
Atty Docket No. SCT105U	:	

This is a decision on the petition filed on 15 July, 2005, requesting that the above-identified application, including 10 sheets of drawings, be accorded a filing date of 15 July, 2003.

The petition is **DISMISSED**.

On 15 July, 2003, the application was deposited without drawings.

On 20 May, 2005, Initial Patent Examination Division mailed a Notice of Incomplete Nonprovisional Application, stating that the application had been deposited without drawings, and that application should reconsider whether drawings were necessary under 35 U.S.C. § 113 (first sentence). The Notice stated that the filing date would be the date of receipt of the missing drawings.

In response, on 15 July, 2005, the present petition was filed, accompanied by 10 sheets of drawings. Petitioners assert that the 10 sheets of drawings were present among the application papers deposited on 14 July, 2003. In support, petitioners provide affidavits from attorney William L. Haynes, and counsel's secretary, Jolene McCracken, stating that the 10 sheets of drawings were included in the application papers sent to the USPTO by USPS Express Mail on 15 July, 2003.

A review of the record reveals that no sheets of drawings are located among the application papers deposited on 15 July, 2003.

The argument and evidence supplied with the petition have been carefully considered, but are not persuasive. The USPTO has a well-established and well-publicized practice of providing a receipt for papers filed in the USPTO to any applicant desiring a receipt. The practice requires that any paper for which a receipt is desired be filed in the USPTO with a self-addressed postcard identifying the paper. A postcard receipt which itemizes and properly identifies the papers which are being filed serves as prima facie evidence of receipt in the USPTO of all the items listed thereon on the date stamped thereon by the USPTO. See section 503, Manual of Patent Examining Procedure (MPEP 503). Unfortunately, petitioners' postcard receipt does not bear an Office-date stamp of 15 July, 2003, from the USPTO. Rather, the postcard receipt bears an Office-date stamp of 15 July, 2005. As such, the postcard receipt does not serve as evidence that the items listed therein were received in the USPTO on 15 July, 2003. If petitioners have a copy of the postcard receipt for this application with a USPTO "Office date" stamp of 15 July, 2003, a copy of that postcard should be submitted with any renewed petition.

Additionally, petitioners should note that the Express Mail mailing label is not persuasive evidence of the receipt of 10 sheets of drawings on 15 July, 2003, because the other application papers filed by Express Mail were received on 15 July, 2003. Where there is a dispute as to the *contents* of correspondence submitted to the Office an applicant may not rely upon the provisions of 37 CFR 1.10(e) to establish what documents and or fees were filed in the Office with such correspondence.[1] A petition under 37 CFR 1.10 is therefore inappropriate in the present case. A petition under 37 CFR 1.10(e) is only appropriate where the correspondence was sent by Express Mail but nothing was received by the Office.

Lastly, the declarations included in the petition are not persuasive. The statements were made almost two (2) years after the events in question and recite personal remembrances of the preparation and filing of the application with the PTO. The application does not appear to be unusual and it is not understood why the filing of this particular application would stand out in such detail in the affiant's memory, particularly in view of the fact that affiants prepared and mailed similar papers to the PTO on a routine, daily basis.

---

[1] MPEP 513.

Nevertheless, it has been PTO practice to treat an application that contains at least one process or method claim as an application for which a drawing is not necessary for an understanding of the invention under 35 U.S.C. 113 (first sentence).[2] A review of the record reveals that Claim 1 is a method claim. Therefore, the present application is deemed to be an application which does not require a drawing for an understanding of the invention. Accordingly, the application, as filed, is entitled to a filing date.

Since the petition was necessitated by an error on the part of the USPTO, the petition fee submitted with the present petition is unnecessary and will be credited to counsel's deposit account, No. 50-0684, as authorized in the present petition.

The "Notice of Incomplete Nonprovisional Application" mailed on 20 May, 2005, was sent in error and is hereby vacated.

The application will processed and examined using the papers filed on 15 July, 2003. The copy of 10 sheets of drawings filed with the present petition will not be used for processing or examination, but will be retained in the application file.

Petitioners may wish to file the drawings as a preliminary amendment. If the drawings are filed as a preliminary amendment, the amendment will be reviewed by the examiner for new matter.

The application is being referred to Initial Patent Examination Division for further processing with a filing date of 15 July, 2003, using only the application papers filed on that date.

Telephone inquiries should be directed to the undersigned at 571-272-3231.

D Wood

Douglas I. Wood
Senior Petitions Attorney
Office of Petitions

---

[2] MPEP 601.01(f).

UNITED STATES PATENT AND TRADEMARK OFFICE

Commissioner for Patents
United States Patent and Trademark Office
P.O. Box 1450
Alexandria, VA 22313-1450
www.uspto.gov

Date : October 12, 2006

Michael S. Gzybowski
Butzel long
350 S. Main Street, Ste. 300
Ann Arbor, MI 48104

Patent No: 7074357 B2
Application No: 10/620880
Applicant: Kazuhisa Senda, et al.
Issued: July 11, 2006
Title: GASKET

Request for Certificate Of Correction:

Consideration has been given to your request for the issuance of a certificate of correction for the above- identified patent under the provisions of Rule 1.322.

Inspection of column 3, line 32 and, column 8, line 32 in the printed patent, reveals that there is no discrepancy.

In view of the foregoing your request in these matters are hereby **denied**.

Further consideration will be given upon receipt of a Request for Reconsideration, which should be directed to Decisions and Certificate of Correction Branch.

Virginia Tolbert
For Cecelia Newman, Supervisor
Decisions and Certificate of Correction
(703) 308-8309 or (703) 308-9390 ext. 113

vt

SPE RESPONSE FOR CERTIFICATE OF CORRECTION

Paper No.: X

DATE : **September 12, 2007**

TO SPE OF : ART UNIT **3677**

SUBJECT : Request for Certificate of Correction for Appl. No.: **10/620880** Patent No.: **7074357 B2**

A response is requested with respect to a request for a certificate of correction.

With respect to the change(s) requested to correct Office and/or Applicant's errors, should the patent read as shown in the certificate of correction attached herewith or the COCIN document(s), in IFW images for the above-identified patented application? No new matter should be introduced, nor should the scope or meaning of the claims be changed.

If the response is for an IFW, within **7** days, please complete and forward the response, to the employee (named below) via scanning into application images, using document code **COCX**.

DO NOT SEND TO ATTORNEY

If the response is for a paper file wrapper, please complete the response and forward the response with the paper file wrapper, to the employee (named below), within **7** days, to:

Certificates of Correction Branch (CofC)
South Tower - 9A22
Palm Location 7580

VIRGINIA TOLBERT
Certificates of Correction Branch
703-308-9390 ext. 113

Thank You For Your Assistance

The request for issuing the above-identified correction(s) is hereby:

Note your decision on the appropriate box.

- ☐ **Approved** — **All** changes apply.
- ☒ **Approved in Part** — Specify below which changes **do not** apply.
- ☐ **Denied** — State the reasons for denial below.

Comments: APPROVED IN PART the first change in Column 3 line 32 is APPROVED – there should be a space between "2" and "H" so that it reads -- loxane having at least 2 H -- to correct applicant's typing error. The 2nd change in Column 3 line 32 is clearly incorrect – a period between "atoms" and "directly" makes no sense. This change is DENIED. No change is needed in Column 8, line 32. The line reads exactly as applicant requests that it read. This change is DENIED

9/13/07

BRIAN WERNER
SUPERVISORY PATENT EXAMINER
SPE **Art Unit**

SPE RESPONSE FOR CERTIFICATE OF CORRECTION

Paper No.: X

DATE : **September 12, 2007**

TO SPE OF : ART UNIT **3677**

SUBJECT : Request for Certificate of Correction for Appl. No.: **10/620880** Patent No.: **7074357 B2**

A response is requested with respect to a request for a certificate of correction.

With respect to the change(s) requested to correct Office and/or Applicant's errors, should the patent read as shown in the certificate of correction attached herewith or the COCIN document(s), in IFW images for the above-identified patented application? No new matter should be introduced, nor should the scope or meaning of the claims be changed.

If the response is for an IFW, within **7** days, please complete and forward the response, to the employee (named below) via scanning into application images, using document code **COCX**.

DO NOT SENT TO ATTORNEY

If the response is for a paper file wrapper, please complete the response and forward the response with the paper file wrapper, to the employee (named below), within **7** days, to:

Certificates of Correction Branch (CofC)
South Tower - 9A22
Palm Location 7580

VIRGINIA TOLBERT
Certificates of Correction Branch
703-308-9390 ext. 113

Thank You For Your Assistance

The request for issuing the above-identified correction(s) is hereby:
Note your decision on the appropriate box.

- ☐ **Approved** — **All** changes apply.
- ☐ **Approved in Part** — Specify below which changes **do not** apply.
- ☐ **Denied** — State the reasons for denial below.

Comments: the first change in Column 3 line 32 is APPROVED – there should be a space between "2" and "H" so that it reads -- loxane having at least 2 H -- The 2nd change in Column 3 line 32 is clearly incorrect – a period between "atoms" and "directly" makes no sense. This change is DENIED. No change is needed in Column 8, line 32. the lines reads exactly as applicnt requests that it read. This change is also DENIED

SPE **Art Unit**

UNITED STATES PATENT AND TRADEMARK OFFICE

UNITED STATES DEPARTMENT OF COMMERCE
United States Patent and Trademark Office
Address: COMMISSIONER FOR PATENTS
P.O. Box 1450
Alexandria, Virginia 22313-1450
www.uspto.gov

MCKEE, VOORHEES & SEASE, P.L.C.
801 GRAND AVENUE
SUITE 3200
DES MOINES, IA 50309-2721

Mail Date: 04/20/2010

Applicant	: Myron K. Gordin	: DECISION ON REQUEST FOR
Patent Number	: 7607276	: RECALCULATION of PATENT
Issue Date	: 10/27/2009	: TERM ADJUSTMENT IN VIEW
Appliction No	: 10/620,959	: OF WYETH AND NOTICE OF INTENT TO
Filed	: 07/16/2003	: ISSUE CERTIFICATE OF CORRECTION
		:

The Request for Recalculation is **GRANTED** to the extent indicated.

The patent term adjustment has been determined to be **0** days. The USPTO will *sua sponte* issue a certificate of correction reflecting the amount of PTA days determined by the recalculation.

Prior to the issuance of the certificate of correction, the USPTO will afford patentee an opportunity to be heard and request reconsideration. Accordingly, patentee has **one month or thirty (30) days**, whichever is longer, to file a request for reconsideration of this patent term adjustment calculation. See 35 U.S.C. 154(b)(3)(B)(ii) and 37 CFR 1.322(a)(4). No extensions of time will be granted under 37 CFR 1.136.

Patentee should use document code PET.OP if electronically filing a request for reconsideration of this patent term adjustment calculation. The patentee must also include the information required by 37 CFR 1.705(b)(2) and the fee required by 37 CFR 1.18(e). If patentee does not file a timely request for reconsideration of this patent term adjustment calculation including the information required by 37 CFR 1.705(b)(2) and the fee required by 37 CFR 1.18(e), the USPTO will issue a certificate of correction reflecting the PTA determination noted above.

Patentee should be aware that in order to preserve the right to review in the United States District Court for the District of Columbia of the USPTO patent term adjustment determination, patentee must ensure that he or she also take the steps required under 35 U.S.C. 154(b)(4)(A) in a timely manner. Nothing in the request for recalculation should be construed as providing an alternative time frame for commencing a civil action under 35 U.S.C. 154(b)(4)(A).

Any questions concerning this decision should be directed to the Office of Patent Legal Administration at 571-272-7702.

UNITED STATES PATENT AND TRADEMARK OFFICE

COMMISSIONER FOR PATENTS
UNITED STATES PATENT AND TRADEMARK OFFICE
P.O. BOX 1450
ALEXANDRIA, VA 22313-1450
www.uspto.gov

Michael A. Slavin
McHale & Slavin, P.A.
2855 PGA Blvd.
Palm Beach Gardens, FL 33410

COPY MAILED
FEB 13 2004
OFFICE OF PETITIONS

In re Application of :
Michael Shetley :
Application No. 10/620,967 : ON PETITION
Filed: June 14, 2003 :
Attorney Docket No. **2552.005** :

This is a decision on the petition under 37 CFR 1.182 filed January 22, 2004.

The petition is **dismissed**.

Any request for reconsideration of this decision must be submitted within two (2) months from the mail date of this decision. Extensions of time under 37 CFR 1.136(a) are permitted. The reconsideration request should include a cover letter entitled "Renewed Petition under 37 CFR 1.182." This is not a final agency decision.

Petitioner has requested that the Patent and Trademark Office establish Emission Controls Corp. ("ECC") as the owner and assignee of the above-cited patent application and underlying invention although ECC has not been able to get inventor Shetley to execute an assignment transferring his ownership rights in the invention and patent application to ECC. The petition cannot be granted because the Office does not make determinations of ownership of patent property.[1] Rather, the Office only acts in a ministerial role by recording the assignment documents in the Office assignment records, or making the assignment document of record in the file of a patent application, patent, or other patent proceeding. To that end, Section 301 of the *Manual of Patent Examining Procedure* (MPEP) provides, in pertinent part, that:

> . . . [a]n assignment can be made of record in the assignment records of the Office. Recordation of the assignment provides legal notice to the public of the assignment. It should be noted that recording the assignment is merely a ministerial act; it is not an Office determination of the validity of the assignment document nor the effect of the assignment document on the ownership of the patent property.

Further, Section 317.03 of the MPEP provides, in pertinent part, that:

> The recording of a document is not a determination by the Office of the validity of the document or the effect that document has on the title to an application or patent. When necessary, the Office will determine what effect a document [assignment document]has, including whether a party has the authority to take an action in a matter pending before the Office.

[1] The Office may, in limited circumstances, make a determination of ownership when two conflicting statements under 37 CFR 3.73(b) have been filed. In these cases, unlike in instant situation, the ownership or chain of title has already been established and detailed in the statement under 37 CFR 3.73(b). See *MPEP* § 324.

The Office cannot establish ECC as the assignee; ECC must establish is ownership rights for itself and present conclusive evidence of such ownership, e.g., a executed assignment document, to the Office for recordation. If, as in this case, there is an apparent dispute as to who should own the invention at issue and who should have the right to act in the underlying patent application, the matter will likely have to be determined by the appropriate court as the sole inventor has executed the declaration under 37 CFR 1.63 thereby signifying his intent to join the prosecution of the application. Without some conclusive determination of ownership rights to which all relevant parties have agreed or as determined by another appropriate body, the Office does not have the authority to exclude the inventor from the application's prosecution or proclaim that ECC has an exclusive right to the patent property.

The address as cited on the instant petition differs from the address of record. Although a courtesy copy of this decision is being mailed to the address as cited on the petition, petitioner is advised that all future correspondence will be mailed solely to the address of record until appropriate written instructions to the contrary are received.

Further correspondence with respect to this matter should be addressed as follows:

By mail: Mail Stop Petitions
Commissioner for Patents
Box 1450
Alexandria, VA 22313-1450

By FAX: (703) 872-9306
Attn: Office of Petitions

By Hand: Office of Petitions
Crystal Plaza 4, 3C23
2201 South Clark Place
Arlington, VA 22202

The application will be sent to the Office of Initial Patent Examination for further processing.

Telephone inquiries should be directed to the undersigned at (703) 305-0010.

Kenya A. McLaughlin
Petitions Attorney
Office of Petitions

cc:
Syd Cook
President
Emission Control Systems
3150 SW 42nd Street
Palm City, FL 33490

UNITED STATES PATENT AND TRADEMARK OFFICE

Commissioner for Patents
United States Patent and Trademark Office
P.O. Box 1450
Alexandria, VA 22313-1450
www.uspto.gov

FOX ROTHSCHILD, LLP
Pittsburgh
2000 Market Street
10th Floor
Philadelphia PA 19103

COPY MAILED

DEC 1 0 2008

OFFICE OF PETITIONS

In re Application of	:	
Ron Everett	:	
Application No. 10/620,988	:	DECISION ON PETITION
Filed: July 16, 2003	:	
Attorney Docket No. 030353	:	

This is a decision on the petition under the unintentional provisions of 37 CFR 1.137(b), filed September 5, 2008, to revive the above-identified application.

The petition is **GRANTED**.

This application became abandoned as a result of petitioner's failure to file an appeal brief (and fee required by 37 CFR 41.20(b)(2)) within the time period provided in 37 CFR 41.37(a)(1). As an appeal brief (and appeal brief fee) was not filed within two (2) months of the Notice of Appeal filed March 11, 2008, and no extensions of time under the provisions of 37 CFR 1.136(a) were obtained, the appeal was dismissed and the proceedings as to the rejected claims were terminated. See 37 CFR 1.197(b). Accordingly, the date of abandonment of this application is May 12, 2008.

The petition satisfies the requirements of 37 CFR 1.137(b) in that petitioner has supplied (1) the reply in the form of an Appeal Brief with the $255 fee; (2) the petition fee of $770; and (3) a proper statement of unintentional delay.

The file does not indicate a change of address has been submitted, although the address given on the petition differs from the address of record. If appropriate, a change of address should be filed in accordance with MPEP 601.03. A courtesy copy of this decision is being mailed to the address given on the petition; however, the Office will mail all future correspondence solely to the address of record.

Telephone inquiries concerning this decision should be directed to Denise Williams at (571) 272-8930.

This application is being referred to Technology Center AU 2162 for further processing in accordance with this decision on petition

Brian W. Brown
Petitions Examiner
Office of Petitions

cc: Dennis M. Carleton
625 Liberty Avenue
Pittsburgh, PA 15222

UNITED STATES PATENT AND TRADEMARK OFFICE

Commissioner for Patents
United States Patent and Trademark Office
P.O. Box 1450
Alexandria, VA 22313-1450
www.uspto.gov

MICHAEL FRANCIS NIEMI
3855 WEST 5400 SOUTH P.M.B. 128
TAYLORSVILLE, UT 84118

COPY MAILED

MAR 2 7 2006

OFFICE OF PETITIONS

In re Application of	:	
Michael Francis Niemi	:	
Application No. 10/621,013	:	DECISION ON PETITION
Filed: July 17, 2003	:	TO MAKE SPECIAL UNDER
For: SCANNING DEVICE WITH SENSORS AND CAMERA OR TRICORDER	:	37 CFR 1.102(c)(2)

This is a decision on the petition under 37 CFR 1.102(c)(2)(iii), filed February 15, 2006, to make the above-identified application special based on the invention materially contributing to countering terrorism as set forth in M.P.E.P. § 708.02, Section XI.

The petition is **DISMISSED**.

A grantable petition to make an application special under 37 CFR 1.102(c)(2)(iii) and MPEP § 708.02, Section XI: Inventions for Countering Terrorism, should state that special status is sought because the invention materially contributes to countering terrorism. International terrorism as defined in 18 U.S.C. 2331 includes:

> activities that - (A) involve violent acts or acts dangerous to human life that are a violation of the criminal laws of the United States or of any State, or that would be a criminal violation if committed within the jurisdiction of the United States or of any State; [and] (B) appear to be intended - (i) to intimidate or coerce a civilian population; (ii) to influence the policy of a government by intimidation or coercion; or (iii) to affect the conduct of a government by assassination or kidnapping...

If the disclosure it not clear on its face that the clamed invention is materially directed to countering terrorism, the petition must be accompanied by a statement by the applicant, assignee or a registered attorney/agent explaining how the materiality standard is met. The types of technology for countering terrorism could include, but are not limited to, systems for detecting/identifying explosives, aircraft sensors/security systems, and vehicular barricades/disabling systems. No fee is required.

The USPTO's final rule amending 37 CFR 1.102(c)(2) states:

> The materially standard does not permit an applicant to speculate as to how a

> hypothetical end-user might specially apply the invention in a manner that could counter terrorism. Nor does such standard permit an applicant to enjoy the benefit of advance examination merely because some minor aspect of the claimed invention may be directed to countering terrorism...[Response to Comment 65] applicants should not expect to have their petitions granted without a clear demonstration that the claimed invention is materially related to countering terrorism. 69 Fed. Reg. 56511 (Sept. 21, 2004)

The instant petition fails to meet the criteria set out with respect to countering terrorism in MPEP § 708.02 (XI). The specification and claims as originally filed provide no indication of an intention to counter terrorism by providing a sensor. Further steps would be required to actually offset or nullify terrorism, yet no suggestion of "countering terrorism" is found in the disclosure. As a result, no advancement in the technology of countering terrorism has been persuasively shown.

Further correspondence with respect to this matter should be addressed as follows:

By Mail: Mail Stop PETITION
Commissioner for Patents
P. O. Box 1450
Alexandria, VA 22313-1450

By hand: U. S. Patent and Trademark Office
Customer Service Window, Mail Stop Petitions
Randolph Building
401 Dulany Street
Alexandria, VA 22314

By FAX: (571) 273-8300

Telephone inquiries concerning this decision should be directed to Wan Laymon at 571-272-3220.

All other inquiries concerning either the examination or status of the application should be directed to the Technology Center.

This matter is being referred to Technology Center Art Unit 2622 for action in its regular turn.

Amelia Au
Petitions Examiner
Office of Petitions

UNITED STATES PATENT AND TRADEMARK OFFICE

Commissioner for Patents
United States Patent and Trademark Office
P.O. Box 1450
Alexandria, VA 22313-1450
www.uspto.gov

Law Offices of Albert Wai-Kit Chan, LLC
World Plaza, Suite 604
141-07 20th Avenue
Whitestone NY 11357

COPY MAILED

JUN 11 2008

OFFICE OF PETITIONS

In re Application of	:	
CHEUNG, Nai-Kong V.	:	
Application No. 10/621,027	:	DECISION GRANTING PETITION
Filed: July 16, 2003	:	UNDER 37 CFR 1.313(c)(2)
Attorney Docket No. **#639-B-PCT-US**	:	

This is a decision on the petition under 37 CFR 1.313(c)(2), filed June 6, 2008, to withdraw the above-identified application from issue after payment of the issue fee.

The petition is **GRANTED**.

The above-identified application is withdrawn from issue for consideration of a submission under 37 CFR 1.114 (request for continued examination). *See* 37 CFR 1.313(c)(2).

Petitioner is advised that the issue fee paid on April 2, 2008 cannot be refunded. If, however, this application is again allowed, petitioner may request that it be applied towards the issue fee required by the new Notice of Allowance.[1]

Telephone inquiries should be directed to the undersigned at (571) 272-7253.

This application is being referred to Technology Center AU 1623 for processing of the request for continued examination under 37 CFR 1.114 and for consideration of the concurrently filed information disclosure statement.

Monica A. Graves
Petitions Examiner
Office of Petitions

---

[1] *The request to apply the issue fee to the new Notice may be satisfied by completing and returning the new Part B – Fee(s) Transmittal Form (along with any balance due at the time of submission). Petitioner is advised that the Issue Fee Transmittal Form* ***must*** *be completed and timely submitted to avoid abandonment of the application.*

UNITED STATES PATENT AND TRADEMARK OFFICE

COMMISSIONER FOR PATENTS
UNITED STATES PATENT AND TRADEMARK OFFICE
P.O. BOX 1450
ALEXANDRIA, VA 22313-1450
www.uspto.gov

Paper No.

LAW OFFICES OF ALBERT WAI-KIT
CHAN, PLLC
141-07 20TH AVENUE, SUITE 604
WORLD PLAZA
WHITESTONE NY 11357

MAILED

FEB 02 2009

OFFICE OF PETITIONS

In re Application of	:	
Nai-Kong V. Cheung	:	DECISION ON
Application No. 10/621,027	:	APPLICATION FOR
Filed: 07/16/2003	:	PATENT TERM ADJUSTMENT
Attorney Docket No.	:	
#639-B-PCT-US	:	

This is in response to the APPLICATION FOR PATENT TERM ADJUSTMENT filed on November 25, 2008. Applicant requests that the determination of patent term adjustment be increased from zero (0) days to two hundred fifty-four (254) days. Applicant requests this correction on the basis that the Office will take in excess of three years to issue this patent and in light of the recent court decision in Wyeth v. Dudas, No. 07-1492 (D.D.C. September 30, 2008).

To the extent that the instant application for patent term adjustment requests reconsideration of the patent term adjustment as it relates to the Office's failure to issue the patent within 3 years of the filing date, a decision is being **held in abeyance** until after the actual patent date. Knowledge of the actual date the patent issues is required to calculate the amount, if any, of additional patent term patentee is entitled to for Office failure to issue the patent within 3 years. See § 1.703(b).

Applicant is given **TWO (2) MONTHS** from the issue date of the patent to file a written request for reconsideration of the patent term adjustment for Office failure to issue the patent within 3 years. A copy of this decision should accompany the request. Applicant may seek such consideration without payment of an additional fee. However, as to all other bases for seeking reconsideration of the patent term adjustment indicated in the patent, all requirements of § 1.705(d) must be met. Requests for reconsideration on other bases must be timely filed and must include payment of the required fee.

Rather than file the request for reconsideration of Patent Term Adjustment at the time of the mailing of the notice of allowance, applicant is advised that they may wait until the time of the issuance of the patent and file a request for reconsideration of the patent term pursuant to 37 CFR 1.705(d). The USPTO notes that it does not calculate the amount of time earned pursuant to 37 CFR 1.702(b) until the time of the issuance of the patent and accordingly, the Office will consider any request for reconsideration of the patent term adjustment due to an error in the calculation of 37 CFR 1.702(b) to be timely if the request for reconsideration is filed within two months of the issuance of the patent.

To the extent that applicant requests review of the patent term adjustment at the time of the mailing of the notice of allowance, the request for review is **granted**.

The Office has updated the PAIR screen to reflect that the correct Patent Term Adjustment (PTA) determination at the time of the mailing of the Notice of Allowance remains zero (0) days, including entry of additional periods of reduction of 41 and 109 days for applicant delay. A copy of the updated PAIR screen, showing the correct determination, is enclosed.

A review of the record reveals additional bases for entry of periods of reduction for applicant delay. Specifically, 37 CFR 1.704(c), states, in pertinent part, that

> Circumstances that constitute a failure of the applicant to engage in reasonable efforts to conclude processing or examination of an application also include the following circumstances, which will result in the following reduction of the period of adjustment

> set forth in § 1.703 to the extent that the periods are not overlapping:
>
> (8) Submission of a supplemental reply or other paper, other than a supplemental reply or other paper expressly requested by the examiner, after a reply has been filed, in which case the period of adjustment set forth in § 1.703 shall be reduced by the number of days, if any, beginning on the day after the date the initial reply was filed and ending on the date that the supplemental reply or other such paper was filed.
>
> (10) Submission of an amendment under § 1.312 or other paper after a notice of allowance has been given or mailed, in which case the period of adjustment set forth in § 1.703 shall be reduced by the lesser of: (i) The number of days, if any, beginning on the date the amendment under § 1.312 or other paper was filed and ending on the mailing date of the Office action or notice in response to the amendment under § 1.312 or such other paper; or (ii) Four months.

37 CFR 1.704(d) states:

> A paper containing only an information disclosure statement in compliance with §§ 1.97 and 1.98 will not be considered a failure to engage in reasonable efforts to conclude prosecution (processing or examination) of the application under paragraphs (c)(6), (c)(8), (c)(9), or (c)(10) of this section if it is accompanied by a statement that each item of information contained in the information disclosure statement was first cited in any communication from a foreign patent office in a counterpart application and that this communication was not received by any individual designated in § 1.56(c) more than thirty days prior to the filing of the information disclosure statement.

On December 17, 2007, an Information Disclosure Statement (IDS) was filed, 41 days after the filing of an amendment on November 6, 2007. The IDS did not contain the statement set forth in 37 CFR 1.704(d). Accordingly, pursuant to 37 CFR 1.704(c)(8), an

additional reduction of 41 days of patent term adjustment is being entered.

After the mailing of the notice of allowance on January 24, 2008 (and after the payment of the issue fee on April 2, 2008), on June 6, 2008, applicant filed a Petition to Withdraw from Issue, a Request for Continued Examination (RCE) and an Information Disclosure Statement (IDS). The IDS did not contain the statement set forth in 37 CFR 1.704(d). In response, the Office mailed a decision on petition to withdraw from issue on June 11, 2008 and a notice of allowance on September 22, 2008. Accordingly, pursuant to 37 CFR 1.704(c)(10), an additional reduction of 109 days of patent term adjustment is being entered (for the period beginning on June 6, 2008 and ending on September 22, 2008 (which totally overlaps with the period beginning on June 6, 2008 and ending on June 11, 2008).

In view thereof, the correct patent term adjustment at the time of mailing of the notice of allowance is zero (0) days.

The Office acknowledges submission of the $200.00 fee set forth in 37 CFR 1.18(e). No additional fees are required.

The application is being forwarded to the Office of Data Management for issuance of the patent. The patent term adjustment indicated on the patent (as shown on the Issue Notification mailed about three weeks prior to patent issuance) will include any additional adjustment accrued both for Office delay in issuing the patent more than four months after payment of the issue fee and satisfaction of all outstanding requirements, and for the Office taking in excess of three years to issue the patent (to the extent that the three-year period does not overlap with periods already accorded).

Telephone inquiries specific to this matter should be directed to Senior Petitions Attorney Douglas I. Wood at (571) 272-3231.

Nancy Johnson
Senior Petitions Attorney
Office of Petitions

Enclosure: Copy of revised PALM Screen

PALM INTRANET

Day : Monday
Date: 2/2/2009
Time: 10:30:15

PTA Calculations for Application: 10/621027			
Application Filing Date:	07/16/2003	PTO Delay (PTO):	92
Issue Date of Patent:		Three Years:	0
Pre-Issue Petitions:	0	Applicant Delay (APPL):	304
Post-Issue Petitions:	0	Total PTA (days):	0
PTO Delay Adjustment:	-150		

File Contents History

Number	Date	Contents Description	PTO	APPL	START
143	02/02/2009	ADJUSTMENT OF PTA CALCULATION BY PTO		41	
142	02/02/2009	ADJUSTMENT OF PTA CALCULATION BY PTO		109	
132	09/22/2008	MAIL NOTICE OF ALLOWANCE			
131	08/14/2008	INFORMATION DISCLOSURE STATEMENT CONSIDERED			
130	08/14/2008	INFORMATION DISCLOSURE STATEMENT (IDS) FILED			
129	08/14/2008	ISSUE REVISION COMPLETED			
128	08/14/2008	DOCUMENT VERIFICATION			
127	08/14/2008	NOTICE OF ALLOWANCE DATA VERIFICATION COMPLETED			
126	08/14/2008	EXAMINER'S AMENDMENT COMMUNICATION			
125	08/14/2008	NOTICE OF ALLOWABILITY			
122	06/06/2008	INFORMATION DISCLOSURE STATEMENT CONSIDERED			
121	06/06/2008	INFORMATION DISCLOSURE STATEMENT (IDS) FILED			
120	06/17/2008	DATE FORWARDED TO EXAMINER			
119	06/06/2008	REQUEST FOR CONTINUED EXAMINATION (RCE)			
118	06/17/2008	DISPOSAL FOR A RCE/CPA/129 (EXPRESS ABANDONMENT IF CPA)			
117	06/11/2008	MAIL-RECORD PETITION DECISION OF GRANTED TO WITHDRAW FROM ISSUE			
116	06/11/2008	RECORD PETITION DECISION OF GRANTED TO WITHDRAW FROM ISSUE			
115	06/06/2008	PETITION ENTERED			
114	06/06/2008	INFORMATION DISCLOSURE STATEMENT (IDS) FILED			

113	06/06/2008	WORKFLOW - REQUEST FOR RCE - BEGIN			
112	05/06/2008	TC RETURN TO PUBS			
111	04/02/2008	ISSUE FEE PAYMENT VERIFIED			
110	04/02/2008	ISSUE FEE PAYMENT RECEIVED			
109	02/08/2008	INFORMATION DISCLOSURE STATEMENT CONSIDERED			
108	02/08/2008	INFORMATION DISCLOSURE STATEMENT CONSIDERED			
107	02/26/2008	PUBS CASE REMAND TO TC			
106	03/11/2008	WORKFLOW - QUERY REQUEST - BEGIN			
105	02/08/2008	INFORMATION DISCLOSURE STATEMENT (IDS) FILED			
104	02/08/2008	INFORMATION DISCLOSURE STATEMENT (IDS) FILED			
103	01/29/2008	EXPORT TO INITIAL DATA CAPTURE			
102	01/24/2008	MAIL NOTICE OF ALLOWANCE			
102	01/24/2008	MAIL NOTICE OF ALLOWANCE			
101	01/24/2008	MAIL EXAMINER'S AMENDMENT			
101	01/24/2008	MAIL EXAMINER'S AMENDMENT			
100	01/22/2008	DOCUMENT VERIFICATION			
100	01/22/2008	DOCUMENT VERIFICATION			
99	01/22/2008	ISSUE REVISION COMPLETED			
99	01/22/2008	ISSUE REVISION COMPLETED			
98	01/22/2008	NOTICE OF ALLOWANCE DATA VERIFICATION COMPLETED			
97	01/22/2008	CASE DOCKETED TO EXAMINER IN GAU			
96	01/22/2008	EXAMINER'S AMENDMENT COMMUNICATION			
95	01/22/2008	NOTICE OF ALLOWABILITY			
94	12/17/2007	REFERENCE CAPTURE ON IDS			
93	12/17/2007	INFORMATION DISCLOSURE STATEMENT (IDS) FILED			
92	12/17/2007	INFORMATION DISCLOSURE STATEMENT CONSIDERED			
90	12/17/2007	INFORMATION DISCLOSURE STATEMENT (IDS) FILED			
89	10/26/2007	INFORMATION DISCLOSURE STATEMENT CONSIDERED			
86	11/14/2007	DATE FORWARDED TO EXAMINER			
85	11/06/2007	AMENDMENT SUBMITTED/ENTERED WITH FILING OF CPA/RCE			

84	10/26/2007	REFERENCE CAPTURE ON IDS			
83	10/26/2007	INFORMATION DISCLOSURE STATEMENT (IDS) FILED			
82	11/14/2007	DATE FORWARDED TO EXAMINER			
81	10/26/2007	REQUEST FOR CONTINUED EXAMINATION (RCE)			
80	11/14/2007	DISPOSAL FOR A RCE/CPA/129 (EXPRESS ABANDONMENT IF CPA)			
79	10/26/2007	INFORMATION DISCLOSURE STATEMENT (IDS) FILED			
78	10/26/2007	WORKFLOW - REQUEST FOR RCE - BEGIN			
77	08/07/2007	MAIL FINAL REJECTION (PTOL - 326)			
76	08/06/2007	FINAL REJECTION			
74	06/04/2007	AFFIDAVIT(S) (RULE 131 OR 132) OR EXHIBIT(S) RECEIVED			
73	06/07/2007	DATE FORWARDED TO EXAMINER			
72	06/04/2007	RESPONSE AFTER NON-FINAL ACTION		61	65
71	06/04/2007	REQUEST FOR EXTENSION OF TIME - GRANTED			
70	07/16/2003	INFORMATION DISCLOSURE STATEMENT CONSIDERED			
69	07/16/2003	INFORMATION DISCLOSURE STATEMENT (IDS) FILED			
68	01/31/2007	MAIL MISCELLANEOUS COMMUNICATION TO APPLICANT			
67	01/29/2007	MISCELLANEOUS COMMUNICATION TO APPLICANT - NO ACTION COUNT			
66	01/22/2007	EXAMINER INTERVIEW SUMMARY RECORD (PTOL - 413)			
65	01/04/2007	MAIL NON-FINAL REJECTION			
64	12/21/2006	NON-FINAL REJECTION			
63	12/20/2006	CASE DOCKETED TO EXAMINER IN GAU			
62	09/14/2006	DATE FORWARDED TO EXAMINER			
61	09/07/2006	RESPONSE AFTER NON-FINAL ACTION		93	59
60	09/07/2006	REQUEST FOR EXTENSION OF TIME - GRANTED			
59	03/06/2006	MAIL NON-FINAL REJECTION			
58	03/03/2006	NON-FINAL REJECTION			
57	01/11/2006	INFORMATION DISCLOSURE STATEMENT CONSIDERED			
		INFORMATION DISCLOSURE STATEMENT			

56	01/11/2006	CONSIDERED			
55	02/07/2006	CASE DOCKETED TO EXAMINER IN GAU			
54.7	01/11/2006	INFORMATION DISCLOSURE STATEMENT (IDS) FILED		30	49
54	01/11/2006	INFORMATION DISCLOSURE STATEMENT (IDS) FILED			
53.7	01/11/2006	INFORMATION DISCLOSURE STATEMENT (IDS) FILED			
53	01/11/2006	INFORMATION DISCLOSURE STATEMENT (IDS) FILED			
52	01/04/2006	DATE FORWARDED TO EXAMINER			
51	12/12/2005	AMENDMENT SUBMITTED/ENTERED WITH FILING OF CPA/RCE			
50	01/04/2006	DATE FORWARDED TO EXAMINER			
49	12/12/2005	REQUEST FOR CONTINUED EXAMINATION (RCE)		60	41
48	01/04/2006	DISPOSAL FOR A RCE/CPA/129 (EXPRESS ABANDONMENT IF CPA)			
47	12/12/2005	REQUEST FOR EXTENSION OF TIME - GRANTED			
46	12/12/2005	WORKFLOW - REQUEST FOR RCE - BEGIN			
45	10/04/2005	MAIL ADVISORY ACTION (PTOL - 303)			
44	10/03/2005	ADVISORY ACTION (PTOL-303)			
43	09/19/2005	DATE FORWARDED TO EXAMINER			
42	09/13/2005	AMENDMENT AFTER FINAL REJECTION			
41	07/13/2005	MAIL FINAL REJECTION (PTOL - 326)			
40	07/11/2005	FINAL REJECTION			
39	06/15/2005	MISCELLANEOUS INCOMING LETTER			
38	05/20/2005	MISCELLANEOUS INCOMING LETTER			
37	05/16/2005	REFERENCE CAPTURE ON IDS			
36.7	05/16/2005	INFORMATION DISCLOSURE STATEMENT (IDS) FILED		46	33
36	05/16/2005	INFORMATION DISCLOSURE STATEMENT (IDS) FILED			
35.7	04/28/2005	INFORMATION DISCLOSURE STATEMENT (IDS) FILED			
35	04/28/2005	INFORMATION DISCLOSURE STATEMENT (IDS) FILED			
34	04/27/2005	DATE FORWARDED TO EXAMINER			
33	03/31/2005	RESPONSE AFTER NON-FINAL ACTION		14	27

32	03/31/2005	REQUEST FOR EXTENSION OF TIME - GRANTED			
31	04/12/2005	IFW TSS PROCESSING BY TECH CENTER COMPLETE			
30.7	03/29/2005	INFORMATION DISCLOSURE STATEMENT (IDS) FILED			
30	03/29/2005	INFORMATION DISCLOSURE STATEMENT (IDS) FILED			
29	11/24/2004	REFERENCE CAPTURE ON IDS			
28.7	11/24/2004	INFORMATION DISCLOSURE STATEMENT (IDS) FILED			
28	11/24/2004	INFORMATION DISCLOSURE STATEMENT (IDS) FILED			
27	12/17/2004	MAIL NON-FINAL REJECTION	92		-1
26.7	11/12/2004	INFORMATION DISCLOSURE STATEMENT (IDS) FILED			
26	11/12/2004	INFORMATION DISCLOSURE STATEMENT (IDS) FILED			
25	11/10/2004	NON-FINAL REJECTION			
24.7	09/27/2004	INFORMATION DISCLOSURE STATEMENT (IDS) FILED			
24	09/27/2004	INFORMATION DISCLOSURE STATEMENT (IDS) FILED			
23	10/15/2004	CASE DOCKETED TO EXAMINER IN GAU			
22.7	07/14/2004	INFORMATION DISCLOSURE STATEMENT (IDS) FILED			
22	07/14/2004	INFORMATION DISCLOSURE STATEMENT (IDS) FILED			
21	05/28/2004	PRELIMINARY AMENDMENT			
20	02/20/2004	OATH OR DECLARATION FILED (INCLUDING SUPPLEMENTAL)			
19	07/17/2003	REFERENCE CAPTURE ON IDS			
17	07/17/2003	NEW OR ADDITIONAL DRAWING FILED			
16	07/17/2003	PRELIMINARY AMENDMENT			
15	05/28/2004	WORKFLOW INCOMING AMENDMENT IFW			
14	03/08/2004	APPLICATION RETURN FROM OIPE			
13	03/08/2004	APPLICATION RETURN TO OIPE			
12	03/08/2004	APPLICATION DISPATCHED FROM OIPE			
11	03/08/2004	APPLICATION IS NOW COMPLETE			
10	01/16/2004	ADDITIONAL APPLICATION FILING FEES			
		A STATEMENT BY ONE OR MORE INVENTORS			

9	01/16/2004	SATISFYING THE REQUIREMENT UNDER 35 USC 115, OATH OF THE APPLIC			
8	12/15/2003	PRE-EXAM OFFICE ACTION WITHDRAWN			
7	12/15/2003	NOTICE MAILED--APPLICATION INCOMPLETE--FILING DATE ASSIGNED			
4	10/07/2003	CASE CLASSIFIED BY OIPE			
3	10/07/2003	CLEARED BY OIPE CSR			
2	09/07/2003	IFW SCAN & PACR AUTO SECURITY REVIEW			
1	07/17/2003	INITIAL EXAM TEAM NN			

Search Another: Application# Search

EXPLANATION OF PTA CALCULATION

EXPLANATION OF PTE CALCULATION

To go back, right click here and select Back. To go forward, right click here and select Forward. To refresh, right click here and select Refresh.

Back to OASIS | Home page

UNITED STATES PATENT AND TRADEMARK OFFICE

COMMISSIONER FOR PATENTS
UNITED STATES PATENT AND TRADEMARK OFFICE
P.O. BOX 1450
ALEXANDRIA, VA 22313-1450
www.uspto.gov

LAW OFFICES OF ALBERT WAI-KIT
CHAN, PLLC
141-07 20TH AVENUE
WORLD PLAZA, SUITE 604
WHITESTONE NY 11357

MAILED

AUG 31 2009

OFFICE OF PETITIONS

In re Patent No. 7,507,724	:	
Nai-Kong V. Cheung	:	
Issued: March 24, 2009	:	DECISION ON REQUEST FOR
Application No. 10/621,027	:	RECONSIDERATION OF
Filed: July 16, 2003	:	PATENT TERM ADJUSTMENT
Atty Docket No.	:	
#639-B-PCT-US	:	

This is in response to the "REQUEST FOR RECONSIDERATION OF PATENT TERM ADJUSTMENT," filed on March 10, 2009. Patentee requests that the previous decision on application for patent term adjustment be reconsidered, and that the patent term adjustment indicated on the face of the patent be corrected from 0 days to 104 days.

The request for reconsideration of patent term adjustment is **DISMISSED** with respect to making any change in the patent term adjustment determination under 35 U.S.C. § 154(b) of 0 days.

BACKGROUND

On March 10, 2009, the instant application for patent term adjustment was timely filed pursuant to 37 CFR 1.705(d).

On March 24, 2009, the application matured into U.S. Patent No. 7,507,724, with a revised patent term adjustment of 0 days.[1]

Patentee previously asserted that, pursuant to Wyeth v. Dudas, 580 F. Supp. 2d 138, 88 U.S.P.Q. 2d 1538 (D.D.C. 2008), a PTO delay under §154(b)(1)(A) overlaps with a delay under §154(b)(1)(B) only if the delays "occur on the same day." Patentee maintains that the total non-overlapping PTO delay under §154(b)(1)(A) & (B) is 558 (92 + 466) days as these periods do not occur on the same day. Further, given the applicant delay of 454 days, patentee asserts entitlement to 104 (558 - 454) days of patent term adjustment.

OPINION

Preliminarily, it is noted that patentee asserts that the period of Office delay under 35 U.S.C. 154(b)(1)(B) and 37 CFR 1.702(b) is the period from the date "three years from the date on which the national stage commenced under 35 U.S.C. 371(b)" The subject application for patent was not filed under 35 U.S.C. 371(b), but under 35 U.S.C. 111(a). As such, the period of Office delay under 35 U.S.C. 154(b)(1)(B) and 37 CFR 1.702(b) is calculated from the date the application was filed until the filing of an RCE. Further, patentee notes that a request for continued examination was filed on October 26, 2007. However, an RCE was previously filed on December 12, 2005. As a request for continued examination was first filed on December 12, 2005, the period for accruing patent term adjustment under 37 CFR 1.702(b) ended as of the date of the filing of the earliest request for continued examination, or December 12, 2005. As the RCE filed on December 12, 2005 was filed prior to the date that was three (3) years from the filing date of the application, July 16, 2006, the application was not pending at least three years from the application filing date until the date of the filing of a request for continued examination. Accordingly, the period of Office delay under 37 CFR 1.702(b) is 0 days.

[1] In the decision mailed on February 2, 2009, it was determined that 92 days of Office delay was reduced by 454 days of applicant delay for a patent term adjustment of 0 days.

CONCLUSION

In view thereof, the Office affirms that the revised determination of patent term adjustment at the time of the issuance of the patent is 0 days.

The Office acknowledges the previous submission of the $200.00 fee set forth in 37 CFR 1.18(e). No additional fees are required.

Telephone inquiries specific to this matter should be directed to Senior Petitions Attorney Douglas I. Wood, at (571) 272-3231.

Alexa Brown for

Anthony Knight
Supervisor
Office of Petitions

UNITED STATES PATENT AND TRADEMARK OFFICE

COMMISSIONER FOR PATENTS
UNITED STATES PATENT AND TRADEMARK OFFICE
P.O. BOX 1450
ALEXANDRIA, VA 22313-1450
www.uspto.gov

PILLSBURY WINTHROP LLP
2550 Hanover Street
Palo Alto, CA 94304

COPY MAILED

JAN 1 3 2005

OFFICE OF PETITIONS

In re Application of
James D. Pylant, et al.
Application No. 10/621,031
Filed: July 14, 2003
Attorney Docket No. 067810/0303880

NOTICE

This is a notice regarding your request for acceptance of a fee deficiency submission under 37 CFR 1.28. On September 1, 1998, the Court of Appeals for the Federal Circuit held that 37 CFR 1.28(c) is the sole provision governing the time for correction of the erroneous payment of the issue fee as a small entity. **See DH Technology v. Synergystex International, Inc. 154 F.3d 1333, 47 USPQ2d 1865 (Fed. Cir. Sept. 1, 1998).**

The Office no longer investigates or rejects original or reissue applications under 37 CFR 1.56. **1098 Off. Gaz. Pat. Office 502 (January 3, 1989)**. Therefore, nothing in this Notice is intended to imply that an investigation was done.

Your fee deficiency submission under 37 CFR 1.28 is hereby **ACCEPTED**.

The application file does not indicate a change of address has been filed in this case, although the address given on the petition slightly differs from the address of record. If appropriate, a change of address should be filed in this case in accordance with MPEP 601.03. A courtesy copy of this decision is being mailed to the address noted on the petition. However, until otherwise instructed, all future correspondence regarding this application will be mailed solely to the address of record.

Inquiries related to this communication should be directed to the Office of Petitions Staff at (571) 272-3204.

This file is being referred to the Technology Center Art Unit 3721 for further processing.

Sherry D. Brinkley
Petitions Examiner
Office of Petitions
Office of the Deputy Commissioner
for Patent Examination Policy

cc: PILLSBURY WINTHROP LLP
2475 HANOVER STREET
PALO ALTO, CA 94304-1114

UNITED STATES PATENT AND TRADEMARK OFFICE

Commissioner for Patents
United States Patent and Trademark Office
P.O. Box 1450
Alexandria, VA 22313-1450
www.uspto.gov

FISH & RICHARDSON P.C.
P.O. BOX 1022
MINNEAPOLIS, MN 55440-1022

COPY MAILED

JUL 11 2005

OFFICE OF PETITIONS

In re Application of :
Sehat Sutardja :
Application No. 10/621,058 :
Filed: July 15, 2003 :
Attorney Docket No. MP0237

ON PETITION

This is a decision on the petition, filed July 8, 2005 under 37 CFR 1.313(c)(2), to withdraw the above-identified application from issue after payment of the issue fee.

The petition is **GRANTED**.

The above-identified application is withdrawn from issue for consideration of a submission under 37 CFR 1.114 (request for continued examination). See 37 CFR 1.313(c)(2).

Petitioner is advised that the issue fee paid on April 20, 2005 in the above-identified application cannot be refunded. If, however, the above-identified application is again allowed, petitioner may request that it be applied towards the issue fee required by the new Notice of Allowance.[1]

The file does not indicate a change of address has been submitted, although the address given on the petition differs from the address of record. If appropriate, a change of address should be filed in accordance with MPEP 601.03. A courtesy copy of this decision is being mailed to the address given on the petition; however, the Office will mail all future correspondence solely to the address of record.

Telephone inquiries should be directed to Irvin Dingle at (571) 272-3210.

This matter is being referred to Technology Center AU 2838 for processing of the request for continued examination under 37 CFR 1.114 and for consideration of the concurrently filed Information Disclosure Statement.

Irvin Dingle
Petitions Examiner
Office of Petitions
Office of the Deputy Commissioner
for Patent Examination Policy

cc:
Fish & Richardson P.C.
12390 El Camino Real
San Diego, CA 92130

---

[1] The request to apply the issue fee to the new Notice may be satisfied by completing and returning the new Issue Fee Transmittal Form PTOL-85(b), which includes the following language thereon: Commissioner for Patents is requested to apply the Issue Fee and Publication Fee (if any) or re-apply any previously paid issue fee to the application identified above. Petitioner is advised that, whether a fee is indicated as being due or not, the Issue Fee Transmittal Form **must** be completed and timely submitted to avoid abandonment. Note the language in bold text on the first page of the Notice of Allowance and Fee(s) Due (PTOL-85).

UNITED STATES PATENT AND TRADEMARK OFFICE

Commissioner for Patents
United States Patent and Trademark Office
P.O. Box 1450
Alexandria, VA 22313-1450
www.uspto.gov

QUARLES & BRADY
RENAISSANCE ONE
TWO NORTH CENTRAL AVENUE
PHOENIX, AZ 85004-2391

COPY MAILED

MAR 0 9 2006

OFFICE OF PETITIONS

In re Application of
Paul R. Sanberg et al
Application No. 10/621,061
Filed: July 16, 2003
Attorney Docket No. 112133.00002ORD

DECISION GRANTING PETITION
UNDER 37 CFR 1.137(b)

This is a decision on the petition under 37 CFR 1.137(b), filed October 27, 2005, to revive the above-identified application.

The petition is **GRANTED**.

The above-identified application became abandoned for failure to reply in a timely manner to the Restriction Requirement mailed December 23, 2004, which set a shortened statutory period for reply of one (1) month. No extensions of time under the provisions of 37 CFR 1.136(a) were obtained. Accordingly, the above-identified application became abandoned on January 24, 2005. A Notice of Abandonment was mailed on June 29, 2005.

The petition satisfies the conditions for revival pursuant to the provisions of 37 CFR 1.137(b) in that (1) the reply (election and amendment); (2) the petition fee of $750; and (3) the required statement of unintentional delay have been received. Accordingly, the reply to the Restriction Requirement of December 23, 2004 is accepted as having been unintentionally delayed.

The file does not indicate a change of address has been submitted, although the address given on the petition differs from the address of record. If appropriate, a change of address should be filed in accordance with MPEP 601.03. A courtesy copy of this decision is being mailed to the address given on the petition; however, the Office will mail all future correspondence solely to the address of record.

Telephone inquiries concerning this decision should be directed to the undersigned at (571) 272-3218.

The application file is being referred to Technology Center AU 1636 for appropriate action on the reply to the Restriction Requirement of December 23, 2004.

Frances Hicks
Petitions Examiner
Office of Petitions

cc:

Barbara J. Luther
12198 E. Columbine Drive
Scottsdale, AZ 85259

UNITED STATES PATENT AND TRADEMARK OFFICE

Commissioner for Patents
United States Patent and Trademark Office
P.O. Box 1450
Alexandria, VA 22313-1450
www.uspto.gov

MACPHERSON KWOK CHEN & HEID LLP
2033 GATEWAY PLACE
SUITE 400
SAN JOSE CA 95110

COPY MAILED

APR 3 0 2008

OFFICE OF PETITIONS

In re Application of McCarthy et al. :
Application No. 10/621,101 :
Filing Date: July 16, 2003 :
Attorney Docket No. UK8096 :

Decision on Petition

This is a decision on the petition under 37 CFR 1.137(b), filed November 5, 2007, to revive the above-identified application.

The petition is **granted**.

Facts:

A Notice of Allowance requiring payment of the issue fee was mailed August 24, 2005.

A Notice to File Corrected Application Papers was mailed September 29, 2005. The Notice required the submission of the residence address for inventor Dean Carrick. The Notice set a period for thirty (30) days.

The Office did not receive a reply to the September 29, 2005, notice. As a result, the application became abandoned as of midnight on Monday, October 31, 2005.

The issue fee was paid November 23, 2005.

A Notice of Abandonment was mailed August 15, 2006.

The instant petition was filed November 5, 2007.

The instant petition included the petition fee of $770.

The instant petition was accompanied by a reply to the Notice to File Corrected Application Papers in the form of a supplemental declaration containing a residential address for inventor Carrick.

Petitioner has stated the entire delay in filing the required reply from the due date for the reply until the filing of a grantable petition pursuant to 37 CFR 1.137(b) was unintentional.

Discussion:

A review of the record indicates petitioner has met the requirements to revive the application pursuant to 37 CFR 1.137(b). Therefore, the petition is granted and the application is revived.

The application has been abandoned for an extended period of time. The Patent and Trademark Office is relying on petitioner's duty of candor and good faith and accepting the statement that the entire delay in filing the required reply from the due date for the reply until the filing of a grantable petition pursuant to 37 CFR 1.137(b) was unintentional. *See Changes to Patent Practice and Procedure*, 62 *Fed. Reg.* at 53160 and 53178; 1203 *Off. Gaz. Pat. Office* at 88 and 103 (responses to comments 64 and 109) (applicant obligated under 37 CFR 10.18 to inquire into the underlying facts and circumstances when providing the statement required by 37 CFR 1.137(b) to the Patent and Trademark Office).

The Office of Data Management will be informed of the instant decision and the application will be issued as a patent in due course.

Telephone inquiries regarding this communication should be directed to Petitions Attorney Steven Brantley at (571) 272-3203.

Charles Steven Brantley
Senior Petitions Attorney
Office of Petitions

UNITED STATES PATENT AND TRADEMARK OFFICE

Commissioner for Patents
United States Patent and Trademark Office
P.O. Box 1450
Alexandria, VA 22313-1450
www.uspto.gov

KNOBBE MARTENS OLSON & BEAR LLP
2040 MAIN STREET
FOURTEENTH FLOOR
IRVINE, CA 92614

COPY MAILED

DEC 2 0 2005

OFFICE OF PETITIONS

In re Application of	:
J. T. Lin	:
Application No. 10/621,105	: DECISION ACCORDING STATUS
Filed: July 10, 2003	: UNDER 37 CFR 1.47(b)
Attorney Docket No. SRGLT.005RA	:

This decision is in response to the petition filed December 1, 2005 under 37 CFR 1.47(b).

The petition is **GRANTED**.

The above-identified reissue application was filed on July 10, 2003. The application names J. T. Lin as the sole inventor. A Notice to File Missing Parts was mailed May 10, 2005 requiring amongst other things, a signed oath or declaration.

In response to the Notice to File Missing Parts, with a petition under 37 CFR 1.47(b) and a five month extension of time request, the applicant shows that a copy of the application and reissue declaration were sent to the non-signing inventor and that to date, applicants have not received an executed copy of the reissue declaration back from Mr. Lin. This petition is filed alleging that sole inventor J. T. Lin refuses to sign the reissue oath /declaration and seeks status under 37 CFR 1.47(b).

A grantable petition under 37 CFR 1.47(b) requires:

(1) proof that the non-signing inventor cannot be reached or refuses to sign the oath or declaration after having been presented with the application papers (specification, claims and drawings);

(2) an acceptable oath or declaration in compliance with 35 U.S.C. §§ 115 and 116;

(3) the petition fee;

(4) a statement of the last known address of the non-signing inventor;

(5) proof of proprietary interest, and

(6) proof of irreparable damage.

The petition is accompanied by proof that the application materials have been sent to Mr. Lin and received, the petition fee, the last known address for Mr. Lin, a reissue

declaration pursuant to 37 CFR 1.175, executed by Colette Cozean, CEO of the assignee, in the absence of a signature by the sole inventor, a copy of the assignment previously executed by the sole inventor to show proprietary interest and a statement that the application is filed to preserve the applicants rights in the application. Finally, petitioner has submitted a 37 CFR 3.73(b) statement and a reissue application consent of assignee pursuant to 37 CFR 1.1.72.

The above-identified application and papers have been reviewed and found in compliance with 37 CFR 1.47(b). In view thereof, this application is hereby accorded Rule 1.47(b) status.

Please be advised that the fee for a five month extension of time is $1080.00 not $1010.00 as was included with the petition and thus, petitioner's deposit account no. 11-1410 has been charged in the amount of $70.00 to make up the difference.

Thus, as provided in Rule 1.47c, this Office will forward notice of this application's filing to the non-signing inventor at the address given in the petition. Notice of the filing of this application will also be published in the Official Gazette.

This matter is being referred to the Office of Initial Patent Examination for further pre-examination processing.

Telephone inquiries concerning this matter may be directed to the undersigned Petitions Attorney at (571) 272-3212.

Patricia Faison-Ball

Patricia Faison-Ball
Senior Petitions Attorney
Office of Petitions

mar

UNITED STATES PATENT AND TRADEMARK OFFICE

COMMISSIONER FOR PATENTS
UNITED STATES PATENT AND TRADEMARK OFFICE
P.O. BOX 1450
ALEXANDRIA, VA 22313-1450
www.uspto.gov

Kyle F. Schluefer, Esq.
Knobbe Martin Olsen & Bear LLP
2040 Main Street
Fourteenth Floor
Irvine, CA 92614

(For Patent Owner)

William A. Munck
Novakov Davis & Munck, P.C.
P.O. Drawer 800889
Dallas, Texas 75380

(For Requester)

MAILED

JUN 0 6 2006

REEXAM UNIT

In re Reissue Application of
Jui-Teng Lin
Application No. 10/621,105
Filed: July 10, 2003
For: U.S. Patent No. 6,258,082

In re Jui-Teng Lin
Reexamination Proceeding
Control No. 90/006,089
Filed: August 21, 2001
For: U.S. Patent No. 6,258,082

DECISION, *SUA SPONTE*, TO MERGE REISSUE AND REEXAMINATION PROCEEDINGS

The above-captioned reissue and reexamination proceedings are before the Office of Patent Legal Administration for *sua sponte* consideration of whether the proceedings should be merged under 37 CFR 1.565(d) at this time.

REVIEW OF FACTS

1. U.S. patent No. 6,258,082 (the '082 patent) issued on July 10, 2001, with 15 claims.

2. A request for reexamination was filed by a third party requester on August 21, 2001, and was assigned control No. 90/006,089 (the '089 proceeding).

3. Reexamination was ordered for the '089 proceeding on October 9, 2001.

4. An application for reissue, assigned application No. 10/621,105 (the '105 application), was filed by the patent owner on July 10, 2003.

5. A non-final Office action was mailed in the '089 proceeding on September 20, 2005.

6. A response to the non-final office action in the '089 proceeding was received from the patent owner on November 15, 2005.

7. In the '105 application, a petition entitled "Petition to accept an unexecuted declaration under 37 CFR 1.47 (b)" was filed on December 1, 2005. This petition was granted on December 19, 2005.

8. The filing of the '105 reissue application was announced in the *Official Gazette* on January 24, 2006.

DISCUSSION REGARDING MERGER

Under 37 CFR 1.565(d):

> "If a reissue application and an *ex parte* reexamination proceeding on which an order pursuant to § 1.525 has been mailed are pending concurrently on a patent, a decision will normally be made to merge the two proceedings or to suspend one of the two proceedings."

As evidenced by the above review of facts, reissue application No. 10/621,105 and reexamination control No. 90/006,089 are currently pending. The order to reexamine has been mailed in the reexamination proceeding, and notice of the reissue application has been published in the *Official Gazette*. Accordingly, a decision under 37 CFR 1.565(d) is timely.

The general policy of the Office is that a reissue application examination and a reexamination proceeding will not be conducted

separately, and at the same time, as to a particular patent. The reason for this policy is to prevent inconsistent, and possibly conflicting, amendments from being introduced into the two proceedings on behalf of the patent owner. Normally, the proceedings will be merged when it is desirable to do so in the interest of expediting the prosecution of both proceedings. In making a decision on whether or not to merge the two proceedings, consideration will be given to the status of each proceeding. See MPEP 2285.

In order to provide efficient and prompt handling of the reissue and reexamination proceedings and to prevent inconsistent, and possibly conflicting, amendments from being introduced on behalf of the patent owner, it is appropriate that the instant reissue and reexamination proceedings be merged and a joint examination be conducted. Accordingly, the examination of the reissue application and the reexamination proceeding will be merged in accordance with the decision set forth below.

It is to be noted, however, that the grant of merger of a reissue application and an *ex parte* reexamination proceeding under 37 CFR 1.565(d) **is discretionary**. *The present merger is not an assurance that, in a future similar situation, merger would be ordered.*

DECISION MERGING THE REISSUE AND REEXAMINATION PROCEEDINGS

I. Merger of Proceedings

The above-captioned reissue and reexamination proceedings are hereby merged. A joint examination will be conducted in accordance with the following guidelines and requirements.

II. Requirement for Same Amendments in Both Proceedings

1. The patent owner is required to maintain identical amendments in the reissue application and the reexamination files for purposes of the merged proceeding. The maintenance of identical amendments in both files is required as long as the reissue and

reexamination proceedings remain merged. See 37 CFR 1.565(d).

2. A review of the file for reexamination control No. 90/006,089 shows:

(a) Original patent claims 1-15 are present, with claim 3 being last amended on November 15, 2005, and claims 4-10, 12, and 13 also having been amended.

(b) New claims 16-18 have been added.

A review of reissue application No. 10/621,105 shows:

(a) Original patent claims 1-15 are present; with claims 3-10, 12, and 13 having been amended on July 10, 2003.

(b) New claims 16-18 have been added.

At least claim 3 in the reexamination, as amended on November 15, 2005, is not identical to claim 3 as it was amended in the reissue application.

Accordingly, the claims are not identical in both proceedings.

An appropriate housekeeping amendment is required within ONE (1) MONTH of this decision placing the same amendments in both proceedings, specifically, Application No. 10/621,105 and Control Number 90/006,089. The response to this requirement must be limited to formally placing the same amendments in all cases, and patent owner must **not** address any issue of patentability in the housekeeping amendment. It is to be noted that, pursuant to MPEP 2285, amendments in a merged proceeding are submitted under 37 CFR 1.173, in accordance with reissue practice.

III. Conduct of the Merged Reissue Application Examination and Reexamination Proceedings

1. After the appropriate housekeeping amendment (see Part II above) is received, or after the time for same expires, the examiner should promptly prepare an Office action for the merged proceeding.

2. In the event that a housekeeping amendment is not timely submitted, any claim which does not contain identical text in both proceedings should be rejected under 35 U.S.C. 112, paragraph 2, as being indefinite as to the content of the claim, and thus failing to particularly point out the invention.

3. Because the statutory provisions for reissue application examination include, *inter alia*, provisions equivalent to 35 U.S.C. 305 relating to the conduct of *ex parte* reexamination proceedings, the merged examination will be conducted on the basis of the rules relating to the broader, reissue-application examination. The examiner will apply the reissue statute, rules, and case law to the merged proceeding. **However, periods for response should be set at TWO (2) months to comply with the statutory requirement for special dispatch in *ex parte* reexamination (35 U.S.C. 305).**

4. Each Office action issued by the examiner will take the form of a *single action* which jointly applies to the reissue application and the reexamination proceeding. Each action will contain identifying data *for both of the cases*, i.e, the reissue application and the reexamination proceeding, and each action will be entered into both files (which will be maintained as separate files).

5. Any response by the applicant/patent owner must consist of a single response, with two copies being filed for entry in the two files, with each of the two bearing a signature. Any such response must contain identifying data *for both of the cases*, i.e, the reissue application and the reexamination proceeding. *Any such responses must be served on the requester*, who will also be sent copies of Office actions.

6. Pursuant to MPEP 2285, for a merged proceeding containing a reexamination proceeding and a reissue application:

"Amendments should be submitted in accordance with the reissue practice under ... 37 CFR 1.173; see MPEP § 1453."

Thus, the filing of any amendments to the specification, claims, or drawings must comply with the provisions of 37 CFR 1.173, and with the guidelines of MPEP 1453. It is to be noted that 37 CFR 1.121 does not apply to amendments in a reissue application. Accordingly, clean copies of the amended claims are not required, *and such clean copies are not to be submitted*. Instead, pursuant to 37 CFR 1.173(b)(2), amendments are to be presented via markings pursuant to 37 CFR 1.173(d), except that a claim should be canceled by a statement canceling the claim, without presentation of the text of the claim.

Pursuant to 37 CFR 1.173(g), all amendments must be made relative to the patent specification, including the claims, and drawings, which are in effect as of the date of filing the reissue application. *Amendments are not to be made relative to previous amendments*. Thus, for all amendments, all words not appearing in the patent are always underlined, and only words being deleted from the patent appear in brackets.

7. Where a paper is filed which requires payment of a fee (e.g., petition fee, excess claims fee, appeal fee, brief fee, oral hearing fee), only a single fee need be paid. For example, only one fee need be paid for any patent owner appeal brief, even though such a brief would relate to the merged multiple proceedings, and even though copies must be filed (as pointed out above) for each file of the merged proceeding.

8. The examiner (a) will review the files to ensure that each file contains identical citations of prior patents and printed publications, and (b) will cite such documents as are necessary as part of the next Office action in order to place the files in that condition.

9. If the reissue application ultimately matures into a reissue patent, the reexamination proceeding shall be concluded by the grant of the reissue patent, and the reissue patent will serve as the certificate under 37 CFR 1.570. See MPEP 2285.

10. If the applicant/patent owner fails to file a timely and appropriate response to any Office action, the merged proceeding will be dissolved. The reissue application will be held abandoned. The reexamination prosecution will be terminated, and a reexamination certificate under 37 CFR 1.570 will be issued in accordance with the last action of the Office, unless further action in the reexamination proceeding is needed as a result of the difference in the rules relating to reexamination and reissue proceedings. If further action in the reexamination proceeding is needed, any grounds of rejection that are not applicable under reexamination would be withdrawn (e.g., based on public use or on sale), and any new grounds of rejection which are applicable under reexamination (e.g., improperly broadened claims) would be made by the examiner, upon dissolution of the merged proceeding. The existence of any questions/issues remaining which cannot be considered under reexamination following the dissolution would be noted by the examiner as not being proper for consideration in reexamination pursuant to 37 CFR 1.552(c).

10. If the applicant/patent owner files an express abandonment of the reissue application pursuant to 37 CFR 1.138, the next Office action of the examiner will accept the express abandonment, dissolve the merged proceeding, and continue examination as to the reexamination proceeding. Such examination would be conducted as set forth in the immediately preceding paragraph.

CONCLUSION

1. Reissue application No. 10/621,105 and reexamination control No. 90/006,089 **are merged** into a single proceeding.

2. Pursuant to Part II of this decision, a **housekeeping amendment is required** within ONE MONTH of this decision, placing the same amendments in both cases of the present merged proceeding.

3. Jurisdiction over the merged reissue and reexamination proceeding is being transferred to Technology Center 3700 in which the reissue proceeding is assigned. The examiner assigned the merged proceeding is not to be one who was

involved in any part of the examination of the '082 patent (e.g., by preparing/signing an action). See MPEP 2236.

4. The examiner should not issue an Office action for the present merged proceeding until after the earlier of: (a) the submission of the housekeeping amendment to place the same amendments in both cases, or (b) the expiration of the ONE MONTH period from the mailing of this decision for filing the amendment.

5. All further examination in the merged proceeding should be conducted in accordance with Part III of this decision.

6. Telephone inquiries related to this decision should be directed to Karen Hastings, Legal Advisor, at (571) 272-7717.

Kenneth M. Schor
Senior Legal Advisor
Office of Patent Legal Administration

kmh
25 May 2006

June 4, 2006
C:\kiva\kenpetmerger\6089_Merge_cls-diff_3PR_.doc

UNITED STATES PATENT AND TRADEMARK OFFICE

Commissioner for Patents
United States Patent and Trademark Office
P.O. Box 1450
Alexandria, VA 22313-1450
www.uspto.gov

HARNESS, DICKEY & PIERCE, P.L.C.
P.O. BOX 828
BLOOMFIELD HILLS MI 48303

COPY MAILED

MAY 03 2007

OFFICE OF PETITIONS

In re Application of
GELMAN, Alexander et al.
Application No. 10/621,112
Filed: July 16, 2003
Attorney Docket No. **9432-000201**

DECISION ON PETITION
TO WITHDRAW
FROM RECORD

This is a decision on the Request to Withdraw as attorney or agent under 37 C.F.R. § 1.36(b) or 37 C.F.R. § 10.40 filed June 16, 2005.

The request is **NOT APPROVED**.

A review of the file record indicates that NORRIS MCLAUGHLIN & MARCUS, P.A. does not have power of attorney in this patent application nor is there any statement or evidence of record of employment in or otherwise being engaged in the proceedings in this patent application. Accordingly, the request to withdraw under 37 C.F.R. § 1.36(b) is not applicable.

All future communications from the Office will continue to be directed to the above-listed address until otherwise properly notified by the applicant.

Telephone inquires concerning this decision should be directed to Tredelle Jackson at 571-272-2783.

Monica A. Graves
Petitions Examiner
Office of Petitions

cc: **MR. JAMES REEBER**
ARKADOS, INC.
948 U.S. HIGHWAY #22 EAST
NORTH PLAINFIELD, NJ 07060

cc: **NORRIS MCLAUGHLIN & MARCUS, P.A.**
P O BOX 1018
SOMERVILLE, NJ 08876

UNITED STATES PATENT AND TRADEMARK OFFICE

Commissioner for Patents
United States Patent and Trademark Office
P.O. Box 1450
Alexandria, VA 22313-1450
www.uspto.gov

MAYER & WILLIAMS PC
251 NORTH AVENUE WEST, 2ND FLOOR
WESTFIELD NJ 07090

COPY MAILED

MAY 01 2008

OFFICE OF PETITIONS

In re Application of :
EVANGELIDES, et al. :
Application No. 10/621,115 :
Filed: July 16, 2003 :
Attorney Docket No. **9005/19** :

DECISION ON PETITION
TO WITHDRAW
FROM RECORD

This is a decision on the Request to Withdraw as attorney or agent of record under 37 C.F.R. § 1.36(b), filed June 18, 2007.

The request is **NOT APPROVED.**

A grantable request to withdraw as attorney/agent of record must be signed by every attorney/agent seeking to withdraw or contain a clear indication that one attorney is signing on behalf of another/others. A request to withdraw will not be approved unless at least 30 (thirty) days would remain between the date of approval and the later of the expiration date of a time to file a response or the expiration date of the maximum time period which can be extended under 37 C.F.R. § 1.136(a).

The Office cannot approve the request at this time since the reasons provided do not meet any of the conditions under the mandatory or permissive categories enumerated in 37 CFR 10.40. Section 10.40 of Title 37 of the Code of Federal Regulation states, "[a] practitioner shall not withdraw from employment in a proceeding before the Office without permission from the Office[.]" More specifically, 37 CFR 10.40 states, "[i]f paragraph (b) of this section is not applicable, a practitioner may not request permission to withdraw in matter pending before the Office unless such request or such withdrawal is" for one the permissive reasons listed in 37 CFR 10.40(c). The reason set forth in the request, "responsibility transferred per assignee's request," does not meet any of the conditions set forth in 37 CFR 10.40.

In order to request or take action in a patent matter, the assignee must establish its ownership of the patent to the satisfaction of the Director. In this regard, a Statement under 37 CFR 3.73(b) must have either: (i) documentary evidence of a chain of title from the original owner to the assignee (*e.g.*, copy of an executed assignment), and a statement affirming that the documentary evidence of the chain of title from the original owner to the assignee was or concurrently is being

submitted for recordation pursuant to § 3.11; or (ii) a statement specifying where documentary evidence of a chain of title from the original owner to the assignee is recorded in the assignment records of the Office (*e.g.*, reel and frame number).

All future communications from the Office will continue to be directed to the above-listed address until otherwise notified by applicant.

Telephone inquiries concerning this decision should be directed to the undersigned at (571) 272- 7253.

Monica A. Graves
Petitions Examiner
Office of Petitions

cc: **CHOATE, HALL & STEWART, LLP**
TWO INTERNATIONAL PLACE
BOSTON, MA 02110

UNITED STATES PATENT AND TRADEMARK OFFICE

Commissioner for Patents
United States Patent and Trademark Office
P.O. Box 1450
Alexandria, VA 22313-1450
www.uspto.gov

STEPHEN B. DAVIS
BRISTOL-MYERS SQUIBB COMPANY
PATENT DEPARTMENT
P O BOX 4000
PRINCETON, NJ 08543-4000

COPY MAILED

NOV 19 2004

OFFICE OF PETITIONS

ON PETITION

In re Application of	:	
Tao Wang, et al.	:	
Application No. 10/621,139	:	
Filed: July 16, 2003	:	
Atty Docket No. GY-83 DIV2	:	

This is a decision on the petition, filed November 15, 2004, under 37 CFR 1.313(c)(2) to withdraw the above-identified application from issue after payment of the issue fee.

The petition is **GRANTED**.

The above-identified application is withdrawn from issue for consideration of a submission under 37 CFR 1.114 (request for continued examination). See 37 CFR 1.313(c)(2).

Petitioner is advised that the issue fee paid on August 30, 2004, in the above-identified application cannot be refunded. If, however, the above-identified application is again allowed, petitioner may request that it be applied towards the issue fee required by the new Notice of Allowance. [1]

Telephone inquiries relating to this decision should be directed to the undersigned at (571) 272-3204.

The application is being referred to Technology Center AU 1624 for further processing of the request for continued examination under 37 CFR 1.114 filed November 15, 2004.

Sherry D. Brinkley
Petitions Examiner
Office of Petitions
Office of the Deputy Commissioner
for Patent Examination Policy

[1] The request to apply the issue fee to the new Notice may be satisfied by completing and returning the new Issue Fee Transmittal Form PTOL-85(b), which includes the following language thereon: "Commissioner for Patents is requested to apply the Issue Fee and Publication Fee (if any) or re-apply any previously paid issue fee to the application identified above." Petitioner is advised that, whether a fee is indicated as being due or not, the Issue Fee Transmittal Form **must** be completed and timely submitted to avoid abandonment. Note the language in bold text on the first page of the Notice of Allowance and Fee(s) Due (PTOL-85).

UNITED STATES PATENT AND TRADEMARK OFFICE

COMMISSIONER FOR PATENTS
UNITED STATES PATENT AND TRADEMARK OFFICE
P.O. BOX 1450
ALEXANDRIA, VA 22313-1450
www.uspto.gov

COPY MAILED

FEB 23 2004

OFFICE OF PETITIONS

James E. Bradley
Bracewell & Patterson, LLP
PO Box 61389
Houston, TX 77208-1389

In re Application of	:	
Donald H. Gehring.	:	
Application No. 10/621,141	:	DECISION GRANTING PETITION
Filed: July 16, 2003	:	
Attorney Docket No. 032531.000002	:	

This is a decision on the petition filed December 15, 2003, requesting that the above-identified application retain the presently accorded a filing date of July 16, 2003, with figures 15 through 20 of the drawings as part of the original disclosure.

On July 16, 2003, the above-identified application was filed. On November 5, 2003, the Office of Initial Patent Examination mailed a "Notice of Omitted Items of a Nonprovisional Application" (the "Notice"), stating that the application had been accorded a filing date of July 16, 2003 however, figures 15-20 of the drawings appeared to have been omitted. The Notice allowed a non-extendable two-month period for reply beginning from the mailing date of the Notice.

In response, on December 15, 2003, applicants filed the present petition, a copy of figures 15-20 encompassed in two sheets of drawings, and a postcard receipt date-stamped by the Office

Upon review of the record, figures 15-20 of the drawings were not located among the application papers. It is further noted that the transmittal sheet for the original application papers indicates that, "[t]he PTO did not receive 8 sheets of drawings only 2 sheets." A review of the application file reveals that six sheets of drawings encompassing Figures 1, 2, 2A, 3, 4, 5,6,7,8,9, 10, 11, 12, 13, and 14 were found with the original application papers, contrary to the notation made by the Office on the application transmittal sheet. The evidence is convincing that the application papers deposited July 16, 2003, included eight sheets of drawings that included Figures 15-20. Therefore, the application, including figures 15-30 of the drawings, was complete on filing and entitled to the presently accorded filing date of July 16, 2003.

Accordingly, the petition is granted.

The application file is being returned to the Office of Initial Patent Examination for further processing with the presently accorded filing date of July 16, 2003, using the eight (8) pages of drawings filed July 16, 2003.

Any inquiries related to this decision should be directed to the undersigned at (703)305-0010.

Kenya A. McLaughlin
Petitions Attorney
Office of Petitions

UNITED STATES PATENT AND TRADEMARK OFFICE

Commissioner for Patents
United States Patent and Trademark Office
P.O. Box 1450
Alexandria, VA 22313-1450
www.uspto.gov

HONEYWELL INTERNATIONAL, INC.
LAW DEPT. AB2
P O BOX 2245
MORRISTOWN, NJ 07962-9806

COPY MAILED

JUN 21 2005

OFFICE OF PETITIONS

In re Application of	:
Chien-Wei Li et al	:
Application No. 10/621,168	: DECISION GRANTING PETITION
Filed: July 15, 2003	: UNDER 37 CFR 1.313(c)(2)
Attorney Docket No. H0005036	:

This is a decision on the petition, filed June 20, 2005, under 37 CFR 1.313(c)(2) to withdraw the above-identified application from issue after payment of the issue fee.

The petition is **GRANTED**.

The above-identified application is withdrawn from issue for consideration of a submission under 37 CFR 1.114 (request for continued examination). See 37 CFR 1.313(c)(2).

Petitioner is advised that the issue fee paid on May 31, 2005 in the above-identified application cannot be refunded. If, however, the above-identified application is again allowed, petitioner may request that it be applied towards the issue fee required by the new Notice of Allowance.[1]

Telephone inquiries should be directed to the undersigned at (571) 272-3218.

This matter is being referred to Technology Center AU 1755 for processing of the request for continued examination under 37 CFR 1.114 and for consideration of the concurrently filed amendment.

Frances Hicks

Frances Hicks
Petitions Examiner
Office of Petitions
Office of the Deputy Commissioner
for Patent Examination Policy

---

[1] *The request to apply the issue fee to the new Notice may be satisfied by completing and returning the new Issue Fee Transmittal Form PTOL-85(b), which includes the following language thereon: "Commissioner for Patents is requested to apply the Issue Fee and Publication Fee (if any) or re-apply any previously paid issue fee to the application identified above." Petitioner is advised that, whether a fee is indicated as being due or not, the Issue Fee Transmittal Form* ***must*** *be completed and timely submitted to avoid abandonment. Note the language in bold text on the first page of the Notice of Allowance and Fee(s) Due (PTOL-85).*

UNITED STATES PATENT AND TRADEMARK OFFICE

Commissioner for Patents
United States Patent and Trademark Office
P.O. Box 1450
Alexandria, VA 22313-1450
www.uspto.gov

MAR 24 2006

JOHN S. PRATT, ESQ
KILPATRICK STOCKTON, LLP
1100 PEACHTREE STREET
ATLANTA GA 30309

In re Application of	:
Juan Jose Legarda Ibanez	: PETITION TO MAKE SPECIAL
Serial No.: 10/621,229	:
Filed: July 15, 2003	:
Attorney Docket No.: 55979-0100	

This is in response to applicant's petition filed March 3, 2006, to make the above-identified application special under the provisions of 37 CFR 1.102(d).

Applicant has satisfied the provisions set forth in M.P.E.P. 708.02, VIII. (A), (B), (C), (D), and (E). The $130.00 petition fee as required by 37 CFR 1.17(h) was received. Therefore, the petition is **GRANTED**.

The application will be forwarded the examiner for action on the merits commensurate with this decision.

Should there be any questions with regard to this letter please contact Marianne C. Seidel by letter addressed to the Director, Technology Center 1600, P.O. Box 1450, Alexandria, VA 22313-1450, or by telephone at 571-272-0584 or by facsimile transmission at the general Office facsimile number, (703) 872-9306.

Marianne C. Seidel

Marianne C. Seidel
Special Program Examiner
Technology Center 1600

UNITED STATES PATENT AND TRADEMARK OFFICE

Commissioner for Patents
United States Patent and Trademark Office
P.O. Box 1450
Alexandria, VA 22313-1450
www.uspto.gov

TOWNSEND AND TOWNSEND AND CREW, LLP
TWO EMBARCADERO CENTER
EIGHTH FLOOR
SAN FRANCISCO CA 94111-3834

COPY MAILED

DEC 0 8 2008

In re Application of

DOW, Steven W. et al.
Application No. 10/621,254
Filed: July 14, 2003
Attorney Docket No. **021819-000300US**

DECISION ON PETITION
TO WITHDRAW
FROM RECORD

This is a decision on the Request to Withdraw as attorney or agent of record under 37 C.F.R. § 1.36(b), filed November 11, 2008.

The request is **APPROVED**.

A grantable request to withdraw as attorney/agent of record must be signed by every attorney/agent seeking to withdraw or contain a clear indication that one attorney is signing on behalf of another/others. The Office requires the practitioner(s) requesting withdrawal to certify that he, she, or they have: (1) given reasonable notice to the client, prior to the expiration of the response period, that the practitioner(s) intends to withdraw from employment; (2) delivered to the client or a duly authorized representative of the client all papers and property (including funds) to which the client is entitled; and (3) notified the client of any responses that may be due and the time frame within which the client must respond, pursuant 37 CFR 10.40(c).

The request was signed by Kenneth Jenkins on behalf of all attorneys of record who are associated with customer No. 20350. All attorneys/agents associated with the Customer Number 20350 have been withdrawn. Applicant is reminded that there is no attorney of record at this time.

The request to change the correspondence address of record is not acceptable as the requested correspondence address is not that of: (1) the first named signing inventor; or (2) an intervening assignee of the entire interest under 37 C.F.R 3.71. All future communications from the Office will be directed to the first named signing inventor at the first copied address below until otherwise properly notified by the applicant.

Telephone inquiries concerning this decision should be directed to Tredelle Jackson at 571-272-2783.

Tredelle D. Jackson
Paralegal Specialist
Office of Petitions

cc: **STEVEN W. DOW**
8 BLUE GROUSE RIDGE ROAD
LITTLETON CO 80127

cc: **JUVARIS BIO THERAPEUTICS, INC.**
863A MITTEN ROAD
BURLINGAME CA 94010

UNITED STATES PATENT AND TRADEMARK OFFICE

Commissioner for Patents
United States Patent and Trademark Office
P.O. Box 1450
Alexandria, VA 22313-1450
www.uspto.gov

WARE FRESSOLA VAN DER SLUYS & ADOLPHSON, LLP
BRADFORD GREEN, BUILDING 5
755 MAIN STREET, P O BOX 224
MONROE CT 06468

COPY MAILED

NOV 0 4 2008

OFFICE OF PETITIONS

In re Application of	:	
Miska Hannuksela, et al.	:	
Application No. 10/621,259	:	DECISION GRANTING PETITION
Filed: July 15, 2003	:	UNDER 37 CFR 1.313(c)(2)
Attorney Docket No. 944-001.082-1	:	

This is a decision on the petition under 37 CFR 1.313(c)(2), filed November 3, 2008, to withdraw the above-identified application from issue after payment of the issue fee.

The petition is **GRANTED**.

The above-identified application is withdrawn from issue for consideration of a submission under 37 CFR 1.114 (request for continued examination). *See* 37 CFR 1.313(c)(2).

Petitioner is advised that the issue fee paid on May 8, 2008 cannot be refunded. If, however, this application is again allowed, petitioner may request that it be applied towards the issue fee required by the new Notice of Allowance.[1]

Telephone inquiries should be directed to Terri Williams at (571) 272-2991.

This application is being referred to Technology Center AU 2621 for processing of the request for continued examination under 37 CFR 1.114 and for consideration of the concurrently filed information disclosure statement.

Terri Williams
Petitions Examiner
Office of Petitions

---

[1] *The request to apply the issue fee to the new Notice may be satisfied by completing and returning the new Part B – Fee(s) Transmittal Form (along with any balance due at the time of submission). Petitioner is advised that the Issue Fee Transmittal Form must be completed and timely submitted to avoid abandonment of the application.*

SPE RESPONSE FOR CERTIFICATE OF CORRECTION

DATE : 10/13/09 **Paper No.:** —

TO SPE OF : ART UNIT 1642

SUBJECT : Request for Certificate of Correction for Appl. No.: 10/621269 Patent No.: 7572442B2

Please respond to this request for a certificate of correction within 7 days.

FOR IFW FILES:

Please review the requested changes/corrections as shown in the **COCIN** document(s) in the IFW application image. No new matter should be introduced, nor should the scope or meaning of the claims be changed.

Please complete the response (see below) and forward the completed response to scanning using document code **COCX**.

FOR PAPER FILES:

Please review the requested changes/corrections as shown in the attached certificate of correction. Please complete this form (see below) and forward it with the file to:

Certificates of Correction Branch (CofC)
Randolph Square – 9D10-A
Palm Location 7580

Virginia Tolbert
Certificates of Correction Branch
571-272-0460

Thank You For Your Assistance

The request for issuing the above-identified correction(s) is hereby:
Note your decision on the appropriate box.

- [x] **Approved** — All changes apply.
- [ ] **Approved in Part** — Specify below which changes **do not** apply.
- [ ] **Denied** — State the reasons for denial below.

Comments: _____

LARRY R. HELMS, PH.D.
SUPERVISORY PATENT EXAMINER

SPE AU 1642

UNITED STATES PATENT AND TRADEMARK OFFICE

Commissioner for Patents
United States Patent and Trademark Office
P.O. Box 1450
Alexandria, VA 22313-1450
www.uspto.gov

MICHAEL P. MORRIS
BOEHRINGER INGELHEIM CORPORATION
900 RIDGEBURY ROAD
P. O. BOX 368
RIDGEFIELD CT 06877-0368

COPY MAILED

JUL 26 2006

OFFICE OF PETITIONS

In re Application of	:	
Potterat, et al.	:	
Application No. 10/621,272	:	DECISION GRANTING
Filed: July 17, 2003	:	PETITION
Attorney Docket No. 1/1368	:	
For: BICYCLIC OLIGOPEPTIDES	:	

This is a decision on the petition entitled, "PETITION TO ACKNOWLEDGE CLAIM OF FOREIGN PRIORITY UNDER 37 CFR 1.55(a)(1)," filed March 3, 2006. The petition will be treated under 37 CFR 1.181.

The petition under 37 CFR 1.181 is **GRANTED**.

The application was filed on July 17, 2003 without a declaration. On October 27, 2003, applicants filed an executed declaration. In that declaration, applicants claimed benefit of application No. EP 02015907.5, filed July 17, 2002.

Applicants claimed benefit of the foreign application within 4 months of the filing date of the instant non-provisional application. Therefore, the claim for benefit was timely made. Unfortunately, the Office did not recognize the benefit claim or enter it into Office databases.

The benefit claim was timely made. Therefore, the petition is granted. No fee is required. Please find enclosed a replacement filing receipt listing application No. EP 02015907.5, filed July 17, 2002.

After the mailing of this decision, the application will be forwarded to Technology Center A.U. 1654, so the examiner of record can consider the benefit claim on the written record.

Any inquiries pertaining to this matter may be directed to the undersigned at (571) 272-3230.

Shirene Willis Brantley

Shirene Willis Brantley
Senior Petitions Attorney
Office of Petitions

enclosure: REPLACEMENT FILING RECEIPT

UNITED STATES PATENT AND TRADEMARK OFFICE

UNITED STATES DEPARTMENT OF COMMERCE
United States Patent and Trademark Office
Address: COMMISSIONER FOR PATENTS
P.O. Box 1450
Alexandria, Virginia 22313-1450
www.uspto.gov

APPL NO.	FILING OR 371 (c) DATE	ART UNIT	FIL FEE REC'D	ATTY.DOCKET NO	DRAWINGS	TOT CLMS	IND CLMS
10/621,272	07/17/2003	1654	1180	1/1368		17	1

CONFIRMATION NO. 3309

REPLACEMENT FILING RECEIPT

OC000000019726123

28501
MICHAEL P. MORRIS
BOEHRINGER INGELHEIM CORPORATION
900 RIDGEBURY ROAD
P. O. BOX 368
RIDGEFIELD, CT 06877-0368

Date Mailed: 07/24/2006

Receipt is acknowledged of this regular Patent Application. It will be considered in its order and you will be notified as to the results of the examination. Be sure to provide the U.S. APPLICATION NUMBER, FILING DATE, NAME OF APPLICANT, and TITLE OF INVENTION when inquiring about this application. Fees transmitted by check or draft are subject to collection. Please verify the accuracy of the data presented on this receipt. **If an error is noted on this Filing Receipt, please mail to the Commissioner for Patents P.O. Box 1450 Alexandria Va 22313-1450. Please provide a copy of this Filing Receipt with the changes noted thereon. If you received a "Notice to File Missing Parts" for this application, please submit any corrections to this Filing Receipt with your reply to the Notice. When the USPTO processes the reply to the Notice, the USPTO will generate another Filing Receipt incorporating the requested corrections (if appropriate).**

Applicant(s)

Olivier Potterat, Mittelbiberach, GERMANY;
Ruediger Streicher, Biberach, GERMANY;
Klaus Wagner, Warthausen, GERMANY;
Till Maurer, Oberstadion, GERMANY;
Juergen Mack, Biberach, GERMANY;
Stefan Peters, Biberach, GERMANY;

Assignment For Published Patent Application

Boehringer Ingelheim Pharma GmbH & Co. KG, Ingelheim, GERMANY

Power of Attorney: The patent practitioners associated with Customer Number **28501**.

Domestic Priority data as claimed by applicant

This applń claims benefit of 60/416,797 10/08/2002

Foreign Applications

EUROPEAN PATENT OFFICE (EPO) 02015907.5 07/17/2002
If Required, Foreign Filing License Granted: 10/16/2003

The country code and number of your priority application, to be used for filing abroad under the Paris Convention, is US10/621,272

Projected Publication Date: Not Applicable

Non-Publication Request: No

Early Publication Request: No

Title

BICYCLIC OLIGOPEPTIDES

Preliminary Class

514

PROTECTING YOUR INVENTION OUTSIDE THE UNITED STATES

Since the rights granted by a U.S. patent extend only throughout the territory of the United States and have no effect in a foreign country, an inventor who wishes patent protection in another country must apply for a patent in a specific country or in regional patent offices. Applicants may wish to consider the filing of an international application under the Patent Cooperation Treaty (PCT). An international (PCT) application generally has the same effect as a regular national patent application in each PCT-member country. The PCT process **simplifies** the filing of patent applications on the same invention in member countries, but **does not result** in a grant of "an international patent" and does not eliminate the need of applicants to file additional documents and fees in countries where patent protection is desired.

Almost every country has its own patent law, and a person desiring a patent in a particular country must make an application for patent in that country in accordance with its particular laws. Since the laws of many countries differ in various respects from the patent law of the United States, applicants are advised to seek guidance from specific foreign countries to ensure that patent rights are not lost prematurely.

Applicants also are advised that in the case of inventions made in the United States, the Director of the USPTO must issue a license before applicants can apply for a patent in a foreign country. The filing of a U.S. patent application serves as a request for a foreign filing license. The application's filing receipt contains further information and guidance as to the status of applicant's license for foreign filing.

Applicants may wish to consult the USPTO booklet, "General Information Concerning Patents" (specifically, the section entitled "Treaties and Foreign Patents") for more information on timeframes and deadlines for filing foreign patent applications. The guide is available either by contacting the USPTO Contact Center at 800-786-9199, or it can be viewed on the USPTO website at http://www.uspto.gov/web/offices/pac/doc/general/index.html.

For information on preventing theft of your intellectual property (patents, trademarks and copyrights), you may wish to consult the U.S. Government website, http://www.stopfakes.gov. Part of a Department of Commerce initiative, this website includes self-help "toolkits" giving innovators guidance on how to protect intellectual property in specific countries such as China, Korea and Mexico. For questions regarding patent enforcement issues, applicants may call the U.S. Government hotline at 1-866-999-HALT (1-866-999-4158).

LICENSE FOR FOREIGN FILING UNDER
Title 35, United States Code, Section 184
Title 37, Code of Federal Regulations, 5.11 & 5.15

GRANTED

The applicant has been granted a license under 35 U.S.C. 184, if the phrase "IF REQUIRED, FOREIGN FILING LICENSE GRANTED" followed by a date appears on this form. Such licenses are issued in all applications where

the conditions for issuance of a license have been met, regardless of whether or not a license may be required as set forth in 37 CFR 5.15. The scope and limitations of this license are set forth in 37 CFR 5.15(a) unless an earlier license has been issued under 37 CFR 5.15(b). The license is subject to revocation upon written notification. The date indicated is the effective date of the license, unless an earlier license of similar scope has been granted under 37 CFR 5.13 or 5.14.

This license is to be retained by the licensee and may be used at any time on or after the effective date thereof unless it is revoked. This license is automatically transferred to any related applications(s) filed under 37 CFR 1.53(d). This license is not retroactive.

The grant of a license does not in any way lessen the responsibility of a licensee for the security of the subject matter as imposed by any Government contract or the provisions of existing laws relating to espionage and the national security or the export of technical data. Licensees should apprise themselves of current regulations especially with respect to certain countries, of other agencies, particularly the Office of Defense Trade Controls, Department of State (with respect to Arms, Munitions and Implements of War (22 CFR 121-128)); the Bureau of Industry and Security, Department of Commerce (15 CFR parts 730-774); the Office of Foreign Assets Control, Department of Treasury (31 CFR Parts 500+) and the Department of Energy.

NOT GRANTED

No license under 35 U.S.C. 184 has been granted at this time, if the phrase "IF REQUIRED, FOREIGN FILING LICENSE GRANTED" DOES NOT appear on this form. Applicant may still petition for a license under 37 CFR 5.12, if a license is desired before the expiration of 6 months from the filing date of the application. If 6 months has lapsed from the filing date of this application and the licensee has not received any indication of a secrecy order under 35 U.S.C. 181, the licensee may foreign file the application pursuant to 37 CFR 5.15(b).

UNITED STATES PATENT AND TRADEMARK OFFICE

COMMISSIONER FOR PATENTS
UNITED STATES PATENT AND TRADEMARK OFFICE
P.O. BOX 1450
ALEXANDRIA, VA 22313-1450
www.uspto.gov

WOODCOCK WASHBURN LLP
ONE LIBERTY PLACE, 46TH FLOOR
1650 MARKET STREET
PHILADELPHIA, PA 19103

COPY MAILED

FEB 19 2004

OFFICE OF PETITIONS

In re Application of
Belopolsky and Pon
Application No.: 10/621,288
Filed: July 17, 2003
Attorney Docket No: FCI-2706/C3363
For: ELECTRICAL CONNECTOR AND CONTACT FOR USE THEREIN

: DECISION ACCORDING
: RULE 47(a) STATUS

This is in response to the petition under 37 CFR 1.47(a), filed December 22, 2003.

The petition is **GRANTED**.

The above-identified application and papers have been reviewed and found in compliance with 37 CFR 1.47(a). This application is hereby accorded Rule 1.47(a) status.

The above-cited application was filed on July 17, 2003, and was not accompanied by an oath or declaration.. A Notice to File Missing Parts of Nonprovisional Application was mailed on October 20, 2003, requiring a properly executed declaration and $130.00 surcharge. The notice allowed an extendable period for reply of two months from its mailing date. On December 22, 2003, the instant petition was filed and an oath or declaration executed by inventor Pon.

Petitioner has shown that inventor Belopolsky has constructively refused to join the filing of the above-identified application after having been presented with the application papers. The above-identified application and papers have been reviewed and found in compliance with 37 CFR 1.47(a). This application is hereby accorded Rule 1.47(a) status.

As provided in Rule 1.47(c), this Office will forward notice of this application's filing to the non-signing inventors at the addresses given in the petition. Notice of the filing of this application will also be published in the Official Gazette.

This application will be forwarded to the Office of Initial Patent Examination for further processing.

Telephone inquiries should be directed to the undersigned at (703) 305-0010.

Kenya A. McLaughlin

Kenya A. McLaughlin
Petitions Attorney
Office of Petitions

UNITED STATES PATENT AND TRADEMARK OFFICE

UNITED STATES DEPARTMENT OF COMMERCE
United States Patent and Trademark Office
Address: COMMISSIONER FOR PATENTS
P.O. Box 1450
Alexandria, Virginia 22313-1450
www.uspto.gov

APPLICATION NO.	FILING DATE	FIRST NAMED INVENTOR	ATTORNEY DOCKET NO.	CONFIRMATION NO.
10/621,310	07/18/2003	Hideo Mizuta	2003_0974A	2531

513 7590 06/28/2006

WENDEROTH, LIND & PONACK, L.L.P.
2033 K STREET N. W.
SUITE 800
WASHINGTON, DC 20006-1021

EXAMINER
JEANGLAUDE, JEAN BRUNER

ART UNIT	PAPER NUMBER
2819	

DATE MAILED: 06/28/2006

Please find below and/or attached an Office communication concerning this application or proceeding.

UNITED STATES PATENT AND TRADEMARK OFFICE

Commissioner for Patents
United States Patent and Trademark Office
P.O. Box 1450
Alexandria, VA 22313-1450
www.uspto.gov

06092006

WENDEROTH, LIND & PONACK, L.L.P.
2033 K STREET N. W.
SUITE 800
WASHINGTON DC 20006-1021

JUN 26 2006

In re Application of	:	
MIZUTA, Hideo	:	DECISION ON PETITION
Application No. 10/621,310	:	
Filed: July 18, 2003	:	
Title: MAGNETIC ENCODER	:	

This is a decision on the petition filed October 6, 2004, requesting that the holding of abandonment in the above-identified application be withdrawn.

The petition to withdraw the holding of abandonment is GRANTED.

An Ex Parte Quayle Office action was mailed on March 23, 2004, setting a two-month period of response. A Notice of Abandonment was mailed September 28, 2004.

Petitioner asserts that a response titled "Response to Ex Parte Quayle Action" and a Petition for Extension of Time with the appropriate fee was timely filed in the Patent and Trademark Office on September 23, 2004. This is evidenced by a complete copy of the previously filed response titled "Response to Ex Parte Quayle Action," a copy of the Petition for Extension of Time and a copy of the of the date-stamped postcard receipt indicating receipt of the response in the Patent and Trademark Office on September 23, 2004.

The review of the application file reveals that the response to the May 23, 2004 Office action was received and matched with the file. However, the response was not noticed by either the examiner or the technical support staff and consequently the application was held to be abandoned. The application is not abandoned in fact.

For the above reasons, the Notice of Abandonment is hereby vacated and the holding of abandonment withdrawn. Inconvenience to petitioner is regretted.

The application file is being forwarded to the technical support staff for processing the response to the March 23, 2004 Office action. From there, it will be returned to the examiner for further prosecution.

Questions regarding this decision should be directed to Jose' G. Dees at 571-272-1569.

Richard K. Seidel, Director
Technology Center 2800
Semiconductors, Electrical and Optical
Systems and Components

UNITED STATES PATENT AND TRADEMARK OFFICE

16 SEP 2008

Commissioner for Patents
United States Patent and Trademark Office
P.O. Box 1450
Alexandria, VA 22313-1450
www.uspto.gov

Royal W. Craig
Ober, Kaler, Grimes & Shriver
120 East Baltimore Street
8th Floor
Baltimore MD 21202-1643

In re Application of	:
HOFFMAN, Arnold	: DECISION ON PETITION
Application No. 10/621,326	: UNDER 37 CFR 1.78(a)(3)
Filed: July 18, 2003	:
Attorney Docket No. HOFFMAN9	:

This is a decision on the "Petition For Reinstatement Of Priority Claim Under 35 U.S.C. 365(b)" filed May 28, 2008. The petition requests reinstatement of a benefit claim to prior-filed international application PCT/IL02/00051. The benefit claim was included in the application as filed, but it was subsequently deleted from the application by applicants.

There is no mechanism by which a request to reinstate a previously withdrawn benefit claim would be treated differently then a request to add any other untimely benefit claim. Accordingly, the present request has been treated as a petition under 37 CFR 1.78(a)(3) to accept an untimely claim under 35 U.S.C. 120 and 365(c) for the benefit of the prior-filed PCT application. Applicants have submitted the required petition fee.

The petition is **DISMISSED** without prejudice.

The present nonprovisional application was filed after November 29, 2000, and the claim for the benefit of priority to the prior-filed PCT and foreign application contained in the present submission is submitted after expiration of the period specified in 37 CFR 1.78(a)(2)(ii). Therefore, this is a proper petition under 37 CFR 1.78(a)(3).

A petition for acceptance of a claim for late priority under 37 CFR 1.78(a)(3) is only applicable to those applications filed on or after November 29, 2000. Further, the petition is appropriate only after the expiration of the period specified in 37 CFR 1.78(a)(2)(ii). In addition, the petition under 37 CFR 1.78(a)(3) must be accompanied by:

(1) the reference required by 35 U.S.C. 120 and 37 CFR 1.78(a)(2)(i) of the prior-filed application, unless previously submitted;
(2) the surcharge set forth in 1.17(t); and
(3) a statement that the entire delay between the date the claim was due under 37 CFR 1.78(a)(2)(ii) and the date the claim was filed was unintentional. The

> Director may require additional information where there is a question whether the delay was unintentional.

The present petition fails to satisfy items (1) and (3).

With respect to item (1), the amended continuity reference submitted by applicants fails to properly set forth the international application number, as required (the last digit of the international application number is missing).

With respect to item (3), the first page of the specification originally filed herein included a reference identifying the application as "a continuation-in-part of application No. PCT/IL02/00051, filed January 18, 2002 ...." However, as set forth in the amendment filed by applicants on 03 January 2007, applicants expressly deleted this benefit claim: "Applicants hereby withdraw there reliance for benefit on both the Israeli priority application as well as the PCT international application of the which the present application was previously designates as a CIP." The withdrawal of the claim of benefit for the international application was confirmed in the amendment to the first page of the specification filed 13 February 2007, which removed the indication that the present application was a continuation-in-part of the international application.

The present petition states that "the withdrawal of the priority claim to PCT/IL02/0005 [sic] was an inadvertent mistake." However, the petition does not indicate that the entire delay between the date the claim was due and the filing of the present petition was unintentional, as required, nor does it appear that such a statement would be appropriate under the present facts, where the desired benefit claim was expressly and intentionally removed from the application. See MPEP section 201.11(III)(G):

> A cancellation of a benefit claim to a prior application may be considered as a showing that the applicant is intentionally waiving the benefit claim to the prior application in the instant application. If the applicant later files a petition to accept an unintentionally delayed claim to add the benefit claim to the prior application in the same application from which the benefit claim was canceled, the Office may refuse to accept such benefit claim because the delay was not unintentional.

Based on applicants' failure to satisfy all the requirements of a grantable petition under 37 CFR 1.78(a)(3), the request to add the untimely benefit claim to international application PCT/IL02/00051 is properly dismissed.

Further correspondence with respect to this matter should be addressed as follows:

By mail: Mail Stop PCT Legal Administration
Commissioner for Patents
Post Office Box 1450
Alexandria, VA 22313-1450

By hand: Customer Service Window
Mail Stop PCT Legal Administration
Randolph Building
401 Dulany Street
Alexandria, VA 22314

By fax: (571) 273-8300
ATTN: Office of PCT Legal Administration

Any questions concerning this matter may be directed to Richard M. Ross at (571) 272-3296.

Boris Milef
Legal Examiner
Office of Petitions and PCT Legal Administration

0 8 JAN 2009

UNITED STATES PATENT AND TRADEMARK OFFICE

Commissioner for Patents
United States Patent and Trademark Office
P.O. Box 1450
Alexandria, VA 22313-1450
www.uspto.gov

Royal W. Craig
Ober, Kaler, Grimes & Shriver
120 East Baltimore Street
8th Floor
Baltimore MD 21202-1643

In re Application of	:
HOFFMAN, Arnold	: DECISION ON RENEWED PETITION
Application No. 10/621,326	: UNDER 37 CFR 1.78(a)(3)
Filed: July 18, 2003	:
Attorney Docket No. HOFFMAN9	:

This is a decision on the renewed "Petition To Accept Unintentionally Delayed Claim Of Priority Pursuant To 37 CFR 1.78(a)(3)" filed November 04, 2008. The renewed petition again requests reinstatement of a benefit claim to prior-filed international application PCT/IL02/00051. The benefit claim was included in the application as filed, but it was subsequently deleted from the application by applicants.

The renewed petition is **DISMISSED** without prejudice

The decision mailed herein on September 16, 2008 dismissed without prejudice applicant's original petition for failure to satisfy all the requirements of a grantable petition. Specifically, applicant had not provided an amendment containing an acceptable reference to the international application (the amendment provided with the petition did not include the complete international application number, as required), or an acceptable showing that the entire delay between the date the claim was due under 37 CFR 1.78(a)(2)(ii) and the date the claim was filed was unintentional.

With respect to the requirement for a proper reference to the international application, the present renewed petition was not accompanied by a revised amendment or application data sheet containing a reference in compliance with 35 U.S.C. 120 and 37 CFR 1.78(a)(2)(I). Accordingly, this element of a grantable petition remains unsatisfied.

With respect to the showing of unintentional delay, the present renewed petition states that the withdrawal of the benefit claim was an "inadvertent mistake." Under 35 U.S.C. 120, the Office only has the authority to accept a late benefit claim where the delay in submitting the claim was unintentional. In the present case, the applicant deliberately withdrew the benefit claim under 35 U.S.C. 120 directed to the international application. A delay in submitting a benefit claim resulting from a prior deliberate decision to withdraw the benefit claim does not become unintentional merely because applicant, upon reconsideration, later believes the withdrawal to be

a mistake. Clearly, the intentional withdrawal of a benefit claim negates a finding that the entire delay in resubmitting the benefit claim was unintentional. Accordingly, the present record does not support a conclusion that the entire delay between the date the priority claim was due under 37 CFR 1.78(a)(2)(ii) and the date the claim was filed was unintentional. This element of a grantable petition therefore also remains unsatisfied.

Based on applicants' failure to satisfy all the requirements of a grantable petition under 37 CFR 1.78(a)(3), the renewed request to add the untimely benefit claim to international application PCT/IL02/00051 is properly dismissed.

Further correspondence with respect to this matter should be addressed as follows:

By mail: Mail Stop PCT Legal Administration
Commissioner for Patents
Post Office Box 1450
Alexandria, VA 22313-1450

By hand: Customer Service Window
Mail Stop PCT Legal Administration
Randolph Building
401 Dulany Street
Alexandria, VA 22314

By fax: (571) 273-8300
ATTN: Office of PCT Legal Administration

Any questions concerning this matter may be directed to Richard M. Ross at (571) 272-3296.

Boris Milef
Legal Examiner
Office of PCT Legal Administration

UNITED STATES PATENT AND TRADEMARK OFFICE

Commissioner for Patents
United States Patent and Trademark Office
P.O. Box 1450
Alexandria, VA 22313-1450
www.uspto.gov

VINCENT L. RAMIK
DILLER, RAMIK & WIGHT
SUITE 101
6345 MCWHORTER PLACE
ANNANDALE, VA 22003

COPY MAILED

DEC 0 2 2004

OFFICE OF PETITIONS

In re Application of	:	
Piana et al.	:	
Application No. 10/621,336	:	ON PETITION
Filed: July 18, 2003	:	
Title: **JBOX AND SAFETY ZONE PIR SYSTEM**	:	

This is a notice regarding your request for acceptance of a fee deficiency submission under 37 CFR 1.28. On September 1, 1998, the Court of Appeals for the Federal Circuit held that 37 CFR 1.28(c) is the sole provision governing the time for correction of the erroneous payment of the issue fee as a small entity. **See DH Technology v. Synergystex International, Inc. 154 F.3d 1333, 47 USPQ2d 1865 (Fed. Cir. Sept. 1, 1998).**

The Office no longer investigates or rejects original or reissue applications under 37 CFR 1.56. **1098 Off. Gaz. Pat. Office 502 (January 3, 1989)**. Therefore, nothing in this Notice is intended to imply that an investigation was done.

Your fee deficiency submission under 37 CFR 1.28 is hereby **ACCEPTED**.

Inquiries related to this communication should be directed to the undersigned at (571) 272-3282.

Liana Chase

Liana Chase
Petitions Examiner
Office of Petitions
Office of the Deputy Commissioner
for Patent Examination Policy

UNITED STATES PATENT AND TRADEMARK OFFICE

Commissioner for Patents
United States Patent and Trademark Office
P.O. Box 1450
Alexandria, VA 22313-1450
www.uspto.gov

BANNER & WITCOFF
1001 G STREET N W
SUITE 1100
WASHINGTON, DC 20001

COPY MAILED

SEP 0 6 2005

OFFICE OF PETITIONS

In re Application of	:	
Takashi Ohsawa	:	
Application No. 10/621,357	:	ON PETITION
Filed: July 18, 2003	:	
Attorney Docket No. 002372.00044	:	

This is a decision on the petition filed August 30, 2005, which is being treated under 37 CFR 1.313(c)(2), to withdraw the above-identified application from issue after payment of the issue fee.

The petition is **GRANTED**.

The above-identified application is withdrawn from issue for consideration of a submission under 37 CFR 1.114 (request for continued examination). See 37 CFR 1.313(c)(2).

Petitioner is advised that the issue fee paid on August 9, 2005 in the above-identified application cannot be refunded. If, however, the above-identified application is again allowed, petitioner may request that it be applied towards the issue fee required by the new Notice of Allowance.[1]

The file does not indicate a change of address has been submitted, although the address given on the petition differs from the address of record. If appropriate, a change of address should be filed in accordance with MPEP 601.03. A courtesy copy of this decision is being mailed to the address given on the petition; however, the Office will mail all future correspondence solely to the address of record.

---

[1] The request to apply the issue fee to the new Notice may be satisfied by completing and returning the new Issue Fee Transmittal Form PTOL-85(b), which includes the following language thereon: "Commissioner for Patents is requested to apply the Issue Fee and Publication Fee (if any) or re-apply any previously paid issue fee to the application identified above." Petitioner is advised that, whether a fee is indicated as being due or not, the Issue Fee Transmittal Form **must** be completed and timely submitted to avoid abandonment. Note the language in bold text on the first page of the Notice of Allowance and Fee(s) Due (PTOL-85).

Telephone inquiries should be directed to Wan Laymon at (571) 272-3220.

This matter is being referred to Technology Center AU 2824 for processing of the request for continued examination under 37 CFR 1.114.

Wan Laymon
Petitions Examiner
Office of Petitions
Office of the Deputy Commissioner
for Patent Examination Policy

cc: BANNER & WITCOFF
1100 G STREET, N W
ELEVENTH FLOOR
WASHINGTON, DC 20001

UNITED STATES PATENT AND TRADEMARK OFFICE

UNITED STATES DEPARTMENT OF COMMERCE
United States Patent and Trademark Office
Address: COMMISSIONER FOR PATENTS
P.O. Box 1450
Alexandria, Virginia 22313-1450
www.uspto.gov

APPLICATION NO.	FILING DATE	FIRST NAMED INVENTOR	ATTORNEY DOCKET NO.	CONFIRMATION NO.
10/621,433	07/16/2003	J. Richard Hanna	D-1116R1 CIP	1731

28995 7590 05/19/2008
RALPH E. JOCKE
walker & jocke LPA
231 SOUTH BROADWAY
MEDINA, OH 44256

EXAMINER
GREIMEL, JOCELYN

ART UNIT	PAPER NUMBER
3693	

MAIL DATE	DELIVERY MODE
05/19/2008	PAPER

Please find below and/or attached an Office communication concerning this application or proceeding.

The time period for reply, if any, is set in the attached communication.

UNITED STATES PATENT AND TRADEMARK OFFICE

Commissioner for Patents
United States Patent and Trademark Office
P.O. Box 1450
Alexandria, VA 22313-1450
www.uspto.gov

MAILED
FROM DIRECTORS OFFICE

MAY 16 2008

TECHNOLOGY CENTER 3600

Ralph E. Jocke
Walker & Jocke LPA
231 South Broadway
Medina, Ohio 44256

In re Application of :
Hanna, et al. : **DECISION ON PETITION**
Application No. 10/621,433 : **UNDER 37 CFR §1.181**
Filed: July 16, 2003 :
For: **AUTOMATED BANKING** :
APPARATUS AND METHOD :

This is a decision on applicants' Petition to the Commissioner according to 37 CFR 1.181 which was filed November 19, 2007.

The petition is **GRANTED** to the extent indicated below.

Applicant's petition filed November 19, 2007 requests that:

1. The Amendment filed October 5, 2007 be entered because the Examiner withdrew the finality of the Office Action dated August 7, 2007 when she issued the 2nd Final on November 2, 2007.
2. The Final Office action dated November 2, 2007 be withdrawn as improper because it does not take into consideration all the pending claims.

A review of the record shows that Applicants submitted an amendment to the claims on May 22, 2007, specifically adding claims 33 and 34. A Final Office action was mailed on August 7, 2007, which failed to properly address the newly added claims (33 and 34). Next, an After Final amendment with arguments was entered on October 5, 2007 adding claims 35-39 and arguing the finality of the previous Office action. On November 2, 2007, the Examiner issued a 2nd Final Office action, which included a proper rejection of claims 33 and 34 and the following statement, "This Final Rejection is being reissued to correct typographical errors and clarify the rejection. The newly submitted amendments will not be entered."

MPEP 706.07(e) states:

> When a final rejection is withdrawn, all amendments filed after the final rejection are ordinarily entered.

The record supports that the Final Office action dated August 7, 2007 is improper because it did not include a proper grounds of rejection statement for claims 33 and 34. As a result, the Examiner reopened prosecution in order to properly address these claims. As per MPEP 706.07(e) Applicants' amendments filed October 5, 2007 should have been entered.

As an additional matter, the record shows that this Application is abandoned as of May 2, 2007 stemming from the Final Office action mailed November 2, 2007. However, as noted above the Final Office action mailed November 2, 2007 is incomplete since the amendment of October 5, 2007 was not entered, which as a matter of right should have been entered when the Final Office Action of August 7, 2007 was vacated and replaced with the Office action of November 2, 2007. Since the Final Office action mailed November 2, 2007 is incomplete for failure to treat all claims, the Office action is hereby **vacated**. Furthermore, the abandonment of this case is hereby withdrawn.

SUMMARY: The petition is **GRANTED,** to the extent indicated above.

This application will be forwarded to the Head Supervisory Legal Instruments Examiner for removal of the "abandoned" status of the application and entry of the October 5, 2007 amendment.

Any inquiries regarding this decision should be directed to Jay Kramer, Supervisory Patent Examiner, at (571) 272-6783.

Wynn Coggins, Director
Patent Technology Center 3600
Telephone No.: (571) 272-5350

UNITED STATES PATENT AND TRADEMARK OFFICE

UNITED STATES DEPARTMENT OF COMMERCE
United States Patent and Trademark Office
Address: COMMISSIONER FOR PATENTS
P.O. Box 1450
Alexandria, Virginia 22313-1450
www.uspto.gov

APPLICATION NO.	FILING DATE	FIRST NAMED INVENTOR	ATTORNEY DOCKET NO.	CONFIRMATION NO.
10/621,433	07/16/2003	J. Richard Hanna	D-1116R1 CIP	1731

28995 7590 05/19/2008
RALPH E. JOCKE
walker & jocke LPA
231 SOUTH BROADWAY
MEDINA, OH 44256

EXAMINER
GREIMEL, JOCELYN

ART UNIT	PAPER NUMBER
3693	

MAIL DATE	DELIVERY MODE
05/19/2008	PAPER

Please find below and/or attached an Office communication concerning this application or proceeding.

The time period for reply, if any, is set in the attached communication.

UNITED STATES PATENT AND TRADEMARK OFFICE

Commissioner for Patents
United States Patent and Trademark Office
P.O. Box 1450
Alexandria, VA 22313-1450
www.uspto.gov

MAILED
FROM DIRECTORS OFFICE

MAY 16 2008

TECHNOLOGY CENTER 3600

Ralph E. Jocke
Walker & Jocke LPA
231 South Broadway
Medina, Ohio 44256

In re Application of :
Hanna, et al. :
Application No. 10/621,433 :
Filed: July 16, 2003 :
For: **AUTOMATED BANKING APPARATUS AND METHOD** :

DECISION ON PETITION UNDER 37 CFR §1.181

2nd Decision

Thi[redacted]he Commissioner according to 37 CFR 1.1[redacted]

Th[redacted]xtent indicated below.

Ap[redacted]requests that:

1. [redacted]e entered because the Examiner withdrew the finality of the Office Action dated August 7, 2007 when she issued the 2nd Final on November 2, 2007.
2. The Final Office action dated November 2, 2007 be withdrawn as improper because it does not take into consideration all the pending claims.
3. The amendment filed November 19, 2007 be rightfully entered.

A review of the record shows that Applicants submitted an amendment to the claims on May 22, 2007, specifically adding claims 33 and 34. A Final Office action was mailed on August 7, 2007, which failed to properly address the newly added claims (33 and 34). Next, an After Final amendment with arguments was entered on October 5, 2007 adding claims 35-39 and arguing the finality of the previous Office action. On November 2, 2007, the Examiner issued a 2nd Final Office action, which included a proper rejection of claims 33 and 34 and the following statement, "This Final Rejection is being reissued to correct typographical errors and clarify the rejection. The newly submitted amendments will not be entered."

On November 19, 2007 Applicants filed a 2nd After Final amendment with arguments adding claims 40 and 41, as well as a Petition requesting a withdraw of the Finality and entry of the previous amendments. In response to the Amendment After Final, the Examiner issued an Advisory Action on December 13, 2007 which stated, "The Final Action of 08/07/07 closed prosecution. Claims added 10/05/07 were not entered. However, the arguments were reviewed and the issues were corrected in the action of 11/02/07. Prosecution is closed and the amendments of 11/05/07 and 11/19/07 were not entered. The claims that are appealable are claims 1-34."

MPEP 706.07(e) states:

> When a final rejection is withdrawn, all amendments filed after the final rejection are ordinarily entered.

With respect to Applicants' request that the Finality of the Office action dated November 2, 2007 be withdrawn and the amendments filed October 5, 2007 be entered, it is hereby noted this matter was addressed in Applicant's Petition dated November 19, 2007. It is further noted that the decision to that petition was granted and thus the final Office action mailed November 2, 2007 was vacated. Accordingly these issues are being **DISMISSED AS MOOT**.

With respect to Applicants' request that the Amendment dated November 19, 2007 be rightfully entered, since the Office action dated November 2, 2007 has been vacated, the request is hereby **GRANTED**.

SUMMARY: The petition is **GRANTED-IN-PART,** to the extent indicated above.

The application will be forwarded to the Head Supervisory Legal Instruments Examiner for entry of the November 19, 2007 amendment. However, if either of the October 5, 2007 or November 19, 2007 amendments raises a new grounds of rejection, the next Office action will be made FINAL.

Wynn Coggins, Director
Patent Technology Center 3600
(571) 272-5350

TL

UNITED STATES PATENT AND TRADEMARK OFFICE

Commissioner for Patents
United States Patent and Trademark Office
P.O. Box 1450
Alexandria, VA 22313-1450
www.uspto.gov

MICHAEL G. PETIT
P.O. BOX 91929
SANTA BARBARA, CA 93190-1929

COPY MAILED

JUL 18 2007

OFFICE OF PETITIONS

In re Application of	:	
Brink, Damon	:	
Application No. 10/621,434	:	ON PETITION
Filed: July 16, 2003	:	
Attorney Docket No. 00INT2C	:	

This is a decision on the petition under 37 C.F.R. § 1.137(b), filed June 18, 2007, to revive the above-identified application.

The petition is **GRANTED.**

The petition satisfies the conditions for revival pursuant to the provisions of 37 CFR 1.137(b) in that (1) the reply in the form of a Request for Continued Examination (RCE) and an Amendment; (2) the petition fee; and (3) the required statement of unintentional delay have been received. Accordingly, the response has been accepted as having been unintentionally delayed.

This matter is being referred to Technology Center 1700 for processing of the Request for Continued Examination under 37 CFR 1.114 filed with the instant petition.

Telephone inquiries regarding this decision should be directed to the undersigned at (571) 272-3206.

Liana Walsh
Petitions Examiner
Office of Petitions

UNITED STATES PATENT AND TRADEMARK OFFICE

COMMISSIONER FOR PATENTS
UNITED STATES PATENT AND TRADEMARK OFFICE
P.O. BOX 1450
ALEXANDRIA, VA 22313-1450
www.uspto.gov

MAY 18 2004

MAILED

MAY 18 2004

OFFICE OF THE DIRECTOR
TC 3600

Adams & Wilks
31st floor
50 Broadway,
New York, NY 10004

In re application of	:	**DECISION ON PETITION**
Nigel Chattey	:	**TO MAKE SPECIAL**
Application No. 10/621,475	:	**(APPLICANT'S AGE)**
Filed: July 17, 2003	:	
For: CRANE APPARATUS EQUIPPED WITH	:	
CONTAINER SECURITY SCANNING SYSTEM	:	

This is a decision on the petition submitted on July 17, 2003 under 37 CFR 1.102 (c) to make the above-identified application special under the accelerated examination procedure set forth in MPEP 708.02, Section IV: Applicant's Age.
The petition is **GRANTED**.

An application may be accorded special status upon the filing of a petition providing evidence showing that the applicant is at least 65 years old. Such a showing may be provided by evidence such as a birth certificate or a statement from the applicant.

The evidence submitted with the petition is a statement from the applicant and a copy of applicant's birth certificate indicating he is at least 65 years of age.

The examiner is directed (1) to make an interference search for possible interfering applications, (2) to promptly examine this application out of turn, and (3) if any interfering application is discovered, to examine such application simultaneously and state in the first official letter of such application that it is being taken out of turn because of a possible interference.

Petitioner is advised that this application will continue to be special, throughout its entire prosecution and pendency, including interference or appeal, if any, only if petitioner

makes a prompt ***bona fide*** effort, in response to each Office action, to place the application in condition for allowance, even if it is necessary to conduct an interview with the examiner to accomplish this purpose.

SUMMARY: Petition to Make Special **GRANTED**.

Steven N. Meyers
Special Programs Examiner
Technology Center 3600
(703) 308-3868

SNM/vdb: 5/11/04

UNITED STATES PATENT AND TRADEMARK OFFICE

Commissioner for Patents
United States Patent and Trademark Office
P.O. Box 1450
Alexandria, VA 22313-1450
www.uspto.gov

ARA DIONYSIAN
12550 ALLIN STREET
LOS ANGELES, CA 90066-6718

COPY MAILED

APR 1 1 2006

OFFICE OF PETITIONS

In re Application of	:	
Dionysian, Ara	:	
Application No. 10/621,487	:	ON PETITION
Filed: July 16, 2003	:	
Attorney Docket No. 03-12180	:	

This is a decision on the petition under 37 CFR 1.102(c)(1), filed March 14, 2006, to make the above-identified application special based on applicant's age as set forth in M.P.E.P. § 708.02, Section IV.

The petition is **DISMISSED AS MOOT**.

This application became abandoned for failure to timely and properly reply to the final Office action mailed June 2, 2005. A Notice of Abandonment was mailed on March 9, 2006 to the current correspondence address of record, listed above. Accordingly, the petition under 37 CFR 1.102(c)(1) filed March 14, 2006, will not be treated on its merits until the application has been revived.

Telephone inquiries concerning this decision should be directed to the undersigned at 571-272-3206.

Liana Chase
Petitions Examiner
Office of Petitions

UNITED STATES PATENT AND TRADEMARK OFFICE

COMMISSIONER FOR PATENTS
UNITED STATES PATENT AND TRADEMARK OFFICE
P.O. BOX 1450
ALEXANDRIA, VA 22313-1450
www.uspto.gov

FINNEGAN, HENDERSON, FARABOW, GARRETT & DUNNER
LLP
901 NEW YORK AVENUE, NW
WASHINGTON DC 20001-4413

COPY MAILED

OCT 0 4 2005

OFFICE OF PETITIONS

Applicant: Ferrari
Appl. No.: 10/621,534
Filing Date: July 17, 2003
Title: COMPOSITIONS COMPRISING AT LEAST ONE ORGANIC POLYMER AND A MIXTURE OF VOLATILE AND NONVOLATILE SOLVENTS
Attorney Docket No.: 05725.0655-01
Pub. No.: US 2004/0234473 A1
Pub. Date: November 25, 2004

This is in response to the "Request for Corrected Patent Application Publication under 37 CFR 1.221(a)," which was filed on January 25, 2005.

The request is DISMISSED.

The instant request is that the application be republished with the including page 19 of the specification witch was unintentionally omitted on filing.

37 CFR 1.221(a) requires "a copy of the application in compliance with the Office electronic filing system requirements and be accompanied by the publication fee set forth in § 1.18(d) and the processing fee set forth in § 1.17(i)". If the request for republication does not comply with the electronic filing system requirements, the republication will not take place and the publication fee set forth in § 1.18(d) will be refunded. The processing fee will be retained.

The applicant did not supply a copy of the application in compliance with the Office electronic filing system, as required by 37 CFR 1.221(a).

Applicant authorized payment of the publication fee set forth in § 1.18(d) ($300) and the processing fee set forth in § 1.17(i)($130.00). The publication fee ($300.00) has not been charged to applicants deposit account and the $130.00 processing fee set forth in 37 CFR 1.17(i) will be Deposit Account No 06-0916.

Any request for republication under 37 CFR 1.221(a), must be submitted via the EFS system and questions or request for reconsideration of the decision, should be addressed as follows:

By mail to: Mail Stop PGPUB
Commissioner for Patents
P.O. Box 1450
Alexandria, Va. 22313-1450

By facsimile: 571-273-8300

Inquiries relating to this matter may be directed to Mark O. Polutta at (571) 272-7709.

Mark O. Polutta
Office of Patent Legal Administration
Office of the Deputy Commissioner
for Patent Examination Policy

UNITED STATES PATENT AND TRADEMARK OFFICE

Commissioner for Patents
United States Patent and Trademark Office
P.O. Box 1450
Alexandria, VA 22313-1450
www.uspto.gov

Raymond E. Vache
605 Sheffield Dr.
Richardson TX 75081

MAILED

MAY 11 2009

OFFICE OF PETITIONS

In re Patent No. 6,840,714	:	
Issue Date: January 11, 2005	:	
Application No. 10/621,537	:	ON PETITION
Filed: July 17, 2003	:	
Attorney Docket No.	:	

This is a decision on the petition under 37 CFR 1.378(c), filed March 9, 2009, to accept the delayed payment of a maintenance fee for the above-identified patent.

The petition is **DISMISSED**.

If reconsideration of this decision is desired, a petition for reconsideration under 37 CFR 1.378(e) must be filed within TWO (2) MONTHS from the mail date of this decision. No extension of this two-month time limit can be granted under 37 CFR 1.136(a) or (b). This is **not** a final agency action within the meaning of 5 U.S.C. § 704.

This patent expired at midnight January 11, 2009, for failure to pay the 3½ maintenance fee. Since this petition was submitted within twenty-four months after the six-month grace period provided in 37 CFR 1.362(e), the petition was timely filed under the provisions of 37 CFR 1.378(c).

Any petition for reconsideration of this decision must be accompanied by the petition fee of $400 as set forth in 37 CFR 1.17(f). The petition for reconsideration must include the lacking item(s) noted below, since, after a decision on the petition for reconsideration, no further reconsideration or review of the matter will be undertaken by the Director.

A petition to accept the unintentionally delayed payment of a maintenance fee under 35 U.S.C. 41(c) and 37 CFR 1.378(c) must be accompanied by: (1) a statement that the delay was unintentional; (2) payment of the appropriate maintenance fee, unless previously submitted; (3) payment of the surcharge set forth in 37 CFR 1.20(i)(2). This petition lacks item (3) above.

Petitioner has submitted $490 for payment of the 3½ year maintenance fee and $65 for the surcharge fee. However, since the 3 ½ year maintenance fee payment was received outside the 6 months grace period the appropriate surcharge required under 37 CFR 1.20(i)(2) is $1,640. Accordingly, the amount of $65 will be applied towards the surcharge leaving a balance of $1,575 that has to be paid prior to the reinstatement of the patent.

Further correspondence with respect to this matter should be addressed as follows:

By Mail: Mail Stop PETITION
Commissioner for Patents
Post Office Box 1450
Alexandria, VA 22313-1450

By hand: U. S. Patent and Trademark Office
Customer Service Window, Mail Stop Petitions
Randolph Building
401 Dulany Street
Alexandria, VA 22314

The centralized facsimile number is (571) 273-8300.

Telephone inquiries should be directed to JoAnne Burke at (703) 571-272-4584.

Ramesh Krishnamurthy

Ramesh Krishnamurthy
Petitions Examiner
Office of Petitions

cc: Sandra Thompson
Republic Financial Corporation – (Legal Dept.)
3300 South Parker Road, Suite 500
Aurora, CO 80014

UNITED STATES PATENT AND TRADEMARK OFFICE

COMMISSIONER FOR PATENTS
UNITED STATES PATENT AND TRADEMARK OFFICE
P.O. BOX 1450
ALEXANDRIA, VA 22313-1450
www.uspto.gov

COPY MAILED

APR 21 2004

OFFICE OF PETITIONS

KENYON & KENYON
1500 K STREET, N.W., SUITE 700
WASHINGTON DC 20005

In re Application of
Atsushi Tabata et al.
Application No. 10/621,608
Filed: July 18, 2003
Att'y Docket No. 11835/11

: DECISION GRANTING PETITION

This is a decision on the petition filed April 1, 2004, under 37 CFR 1.53, in response to the Notice of Incomplete Nonprovisional Application mailed March 19, 2004, requesting that the above identified application be accorded a filing date of July 18, 2003.

On July 18, 2003, the application was filed.

On March 19, 2004, the Office of Initial Patent Examination mailed a "Notice of Incomplete Nonprovisional Application" stating that the application had not been accorded a filing date because the application was deposited without drawings and that the filing date of the application would be the date of receipt of the drawings.

In response, on April 1, 2004 the present petition, and 21 sheets of drawings were filed. Petitioners argue that 21 sheets of drawings were filed with the other application papers on July 18, 2003. In support of the petition, a copy of petitioner's postcard receipt which shows an official USPTO date-stamp of July 18, 2003, and the above-identified application number, and acknowledges receipt of, *inter alia*, 21 sheets of drawings, was supplied with the present petition. Petitioner has also supplied a copy of 21 sheets of drawings. Petitioner requests that the application, including 21 sheets of drawings, be accorded a filing date of July 18, 2003.

Upon review of the record, no sheets of drawings deposited on July 18, 2003, have been located among the application papers. However, the evidence is convincing that the application papers deposited on July 18, 2003, included 21 sheets of drawings, which were subsequently misplaced in the USPTO. Therefore, the application, including the 21 sheets of drawings, was complete on filing and entitled to a filing date of July 18, 2003.

In view of the above, the petition is **GRANTED**.

The Notice of Incomplete Nonprovisional Application mailed March 19, 2004, is withdrawn. Therefore, the petition fee in the amount of $130.00 will be credited to deposit account no. 11-0600.

The application is being returned to the Office of Initial Patent Examination for reprocessing with a filing date of July 18, 2003, using the application papers filed on July 18, 2003 and the 21 sheets of drawings supplied on April 1, 2004.

Telephone inquiries related to this decision should be directed to the undersigned Petitions Attorney at (703) 305-4497.

Patricia Faison-Ball

Patricia Faison-Ball
Senior Petitions Attorney
Office of Petitions

UNITED STATES PATENT AND TRADEMARK OFFICE

Commissioner for Patents
United States Patent and Trademark Office
P.O. Box 1450
Alexandria, VA 22313-1450
www.uspto.go

WOMBLE CARLYLE SANDRIDGE & RICE
P.O. BOX 7037
ATLANTA, GA 30357-0037

COPY MAILED

JAN 2 5 2005

OFFICE OF PETITIONS

In re Application of	:	
Howard et al.	:	
Application No. 10/621,639	:	ON PETITION
Filed: July 17, 2003	:	
Attorney Docket No. C152 1160.1	:	

This is a notice regarding your request for acceptance of a fee deficiency submission under 37 CFR 1.28. On September 1, 1998, the Court of Appeals for the Federal Circuit held that 37 CFR 1.28(c) is the sole provision governing the time for correction of the erroneous payment of the issue fee as a small entity. **See DH Technology v. Synergystex International, Inc. 154 F.3d 1333, 47 USPQ2d 1865 (Fed. Cir. Sept. 1, 1998).**

The Office no longer investigates or rejects original or reissue applications under 37 CFR 1.56. **1098 Off. Gaz. Pat. Office 502 (January 3, 1989)**. Therefore, nothing in this Notice is intended to imply that an investigation was done.

Your fee deficiency submission under 37 CFR 1.28 is hereby **ACCEPTED**.

Inquiries related to this communication should be directed to the undersigned at (571) 272-3282.

Liana Chase
Petitions Examiner
Office of Petitions
Office of the Deputy Commissioner
for Patent Examination Policy

UNITED STATES PATENT AND TRADEMARK OFFICE

COMMISSIONER FOR PATENTS
UNITED STATES PATENT AND TRADEMARK OFFICE
P.O. BOX 1450
ALEXANDRIA, VA 22313-1450
www.uspto.gov

MAILED

JUL 12 2004

Office of the Director
Group 3600

Foley and Lardner
Suite 500
3000 K Street NW
Washington, DC 20007

In re application of
Erick B. Knezek
Application No. 10/621,655
Filed: July 18, 2003
For: PROTECTION BARRIER APPARATUS

DECISION ON PETITION TO MAKE SPECIAL (COUNTER TERRORISM)

This is in response to the petition filed on July 18, 2003 to make the above-identified application special on the basis of inventions for countering terrorism as set forth in MPEP § 708.02 XI. The delay in deciding this petition is regretted.

The petition is **GRANTED**.

The requirements for granting special status under this section are: (A) a petition to make special accompanied by the fee set forth in 37 CFR 1.17(i); and (B) a statement explaining how the invention contributes to countering terrorism.

Applicant's petition explains that the invention is directed to a protection barrier system for countering waterborne terrorist acts due to high speed boats or other types of watercraft attempting to penetrate a particular region in a body of water or abutting a body of water. Additionally, the invention falls into one of the types of inventions contemplated by MPEP § 708.02 XI (i.e., vehicular barricades/disabling systems).

Since all of the requirements for special status under MPEP § 708.02 XI have been met, the petition is **GRANTED**.

The examiner is directed (1) to make an interference search for possible interfering applications, (2) to promptly examine this application out of turn, and (3) if any interfering application is discovered, to examine such application simultaneously and state in the first official letter of such application that it is being taken out of turn because of a possible interference.

Petitioner is advised that this application will continue to be special, throughout its entire prosecution and pendency, including interference or appeal, if any, only if petitioner makes a prompt ***bona fide*** effort, in response to each Office action, to place the

Best Available Copy

application in condition for allowance, even if it is necessary to conduct an interview with the examiner to accomplish this purpose.

SUMMARY: Petition to Make Special **GRANTED**.

Randolph A. Reese

Randolph A. Reese
Special Programs Examiner
Technology Center 3600
(703) 308-2121

RAR/vdb: 7/8/04

Best Available Copy