## SPE RESPONSE FOR CERTIFICATE OF CORRECTION

**Paper No.**:20070122

**DATE** : January 22, 2007

**TO SPE OF** : ART UNIT 1625

**SUBJECT** : Request for Certificate of Correction on Patent No.: 6,962,924

A response is requested with respect to the accompanying request for a certificate of correction.

Please complete this form and return with file, within **7** days to:
**Certificates of Correction Branch - PK 3-910**
Palm location **7590** - Tel. No. 305-8201

With respect to the change(s) requested, correcting Office and/or Applicant's errors, should the patent read as shown in the certificate of correction? No new matter should be introduced, nor should the scope or meaning of the claims be changed.

**Thank You For Your Assistance** **Certificates of Correction Branch**

**The request for issuing the above-identified correction(s) is hereby:**
Note your decision on the appropriate box.

☒ **Approved** **All** changes apply.

☐ **Approved in Part** Specify below which changes **do not** apply.

☐ **Denied** State the reasons for denial below.

**Comments:**

SPE: **Art Unit** 1625

Case: RG/G-32603A

UNITED STATES PATENT AND TRADEMARK OFFICE

# CERTIFICATE OF CORRECTION

PATENT NO : 6,962,924
DATED: : November 8, 2005
INVENTOR(S) : RAY ET AL.

It is certified that there is/are an error(s) in the above-identified patent and that said Letters Patent is hereby corrected as shown below:

Column 1, lines 4 and 5 should read:

-- This application claims the benefit of provisional application Ser. No. 60.401,153, filed on Aug. 5, 2002. --.

The allowed claims (8, 9, 11, 12, 16, 17, 19 and 20) have been renumbered as follows:

1. A Polymorph form 1 of 8-chloro-6,11-dihydro-11-(4-piperidylidene)-5H-benzo[5,6]-cyclohepta[1,2-b]pyridine hemifumarate having the following x-ray powder diffraction pattern expressed in terms of "d" spacing and relative intensity ("$I/I_0$"):

| D | $I/I_0$ |
|---|---|
| 12.32 | 26 |
| 10.53 | 11 |
| 8.444 | 19 |
| 8.149 | 16 |
| 6.550 | 25 |
| 6.281 | 22 |
| 6.185 | 35 |
| 6.084 | 19 |
| 5.553 | 88 |
| 5.373 | 64 |
| 5.096 | 59 |
| 4.960 | 41 |
| 4.745 | 34 |
| 4.470 | 26 |

MAILING ADDRESS OF SENDER:
Peter J. Waibel
Novartis
Corporate Intellectual Property
One Health Plaza, Building 104
East Hanover, NJ 07936-1080
(862) 778-7945

PATENT NO. 6,962,924

FORM PTO-1050

OCT 1 1 2005

UNITED STATES PATENT AND TRADEMARK OFFICE

# CERTIFICATE OF CORRECTION

PATENT NO : 6,962,924
DATED: : November 8, 2005
INVENTOR(S) : RAY ET AL.

| | |
|---|---|
| 4.403 | 30 |
| 4.365 | 46 |
| 4.159 | 84 |
| 4.124 | 73 |
| 4.061 | 35 |
| 3.750 | 79 |
| 3.716 | 100 |
| 3.659 | 27 |
| 3.589 | 14 |
| 3.398 | 11 |
| 3.362 | 16 |
| 3.277 | 10 |
| 3.090 | 23 |
| 3.051 | 11 |
| 3.003 | 15 |
| 2.784 | 10 |
| 2.507 | 12 |

MAILING ADDRESS OF SENDER:
Peter J. Waibel
Novartis
Corporate Intellectual Property
One Health Plaza, Building 104
East Hanover, NJ 07936-1080
(862) 778-7945

PATENT NO. 6,962,924

FORM PTO-1050



OCT 2 1 2006

UNITED STATES PATENT AND TRADEMARK OFFICE

# CERTIFICATE OF CORRECTION

PATENT NO : 6,962,924
DATED: : November 8, 2005
INVENTOR(S) : RAY ET AL.

2. A Polymorph form 2 of 8-chloro-6,11-dihydro-11-(4-piperidylidene)-5H-benzo[5,6]-cyclohepta[1,2-b]pyridine hemifumarate having the following x-ray powder diffraction pattern expressed in terms of "d" spacing and relative intensity ("$I/I_0$"):

| D | $I/I_0$ |
|---|---|
| 14.14 | 14 |
| 10.74 | 13 |
| 7.158 | 39 |
| 7.084 | 20 |
| 5.983 | 12 |
| 5.663 | 61 |
| 5.365 | 33 |
| 5.267 | 100 |
| 5.064 | 12 |
| 4.973 | 46 |
| 4.809 | 16 |
| 4.745 | 43 |
| 4.477 | 32 |
| 4.449 | 26 |
| 4.399 | 60 |
| 4.317 | 54 |
| 4.012 | 49 |

MAILING ADDRESS OF SENDER:
Peter J. Waibel
Novartis
Corporate Intellectual Property
One Health Plaza, Building 104
East Hanover, NJ 07936-1080
(862) 778-7945

PATENT NO. 6,962,924

FORM PTO-1050



OCT 1 1 2006

UNITED STATES PATENT AND TRADEMARK OFFICE

# CERTIFICATE OF CORRECTION

PATENT NO : 6,962,924
DATED: : November 8, 2005
INVENTOR(S) : RAY ET AL.

| | |
|---|---|
| 3.772 | 26 |
| 3.745 | 61 |
| 3.722 | 97 |
| 3.590 | 88 |
| 3.561 | 59 |
| 3.385 | 24 |
| 2.986 | 17 |
| 2.949 | 11 |
| 2.836 | 20 |
| 2.778 | 10 |
| 2.616 | 10 |
| 2.481 | 12 |

MAILING ADDRESS OF SENDER:
Peter J. Waibel
Novartis
Corporate Intellectual Property
One Health Plaza, Building 104
East Hanover, NJ 07936-1080
(862) 778-7945

PATENT NO. 6,962,924

FORM PTO-1050



OCT 1 1 2006

UNITED STATES PATENT AND TRADEMARK OFFICE

# CERTIFICATE OF CORRECTION

PATENT NO : 6,962,924
DATED: : November 8, 2005
INVENTOR(S) : RAY ET AL.

3. A solid pharmaceutical composition comprising an anti-allergic effective amount of the polymorph form 1 according to Claim 1 and a pharmaceutically acceptable carrier.

4. A solid pharmaceutical composition comprising an anti-allergic effective amount of the polymorph form 2 according to Claim 2 and a pharmaceutically acceptable carrier.

5. A process for preparing polymorph form 1 of 8-chloro-6,11-dihydro-11-(4-piperidylidene)-5H-benzo[5,6]-cyclohepta[1,2-b]pyridine hemifumarate according to Claim 1 comprising:

(i) mixing an ethanolic solution of desloratadine and fumaric acid at a temperature of from about 15°C to about 25°C and stirring for 30-45 minutes at this temperature to form a solid; and

(ii) filtering the solid at this temperature to form the polymorphic form 1 of 8-chloro-6,11-dihydro-11-(4-piperidylidene)-5H-benzo[5,6]-cyclohepta[1,2-b]pyridine hemifumarate which is characterized by a DSC of 224°C ± 2°C.

MAILING ADDRESS OF SENDER:
Peter J. Waibel
Novartis
Corporate Intellectual Property
One Health Plaza, Building 104
East Hanover, NJ 07936-1080
(862) 778-7945

PATENT NO. 6,962,924

FORM PTO-1050



OCT 1 1 2005

UNITED STATES PATENT AND TRADEMARK OFFICE

# CERTIFICATE OF CORRECTION

PATENT NO : 6,962,924
DATED: : November 8, 2005
INVENTOR(S) : RAY ET AL.

6. A process for preparing polymorph form 1 of 8-chloro-6,11-dihydro-11-(4-piperidylidene)-5H-benzo[5,6]-cyclohepta[1,2-b]pyridine hemifumarate according to Claim1 comprising:

(a) dissolving desloratadine in anhydrous ethanol to form an ethanolic solution of desloratadine;

(b) dissolving fumaric acid in anhydrous ethanol to form an ethanolic solution of fumaric acid;

(c) mixing the ethanolic solution of desloratadine and the ethanolic solution of fumaric acid at a temperature of from about 15°C to about 25°C and stirring for 30-45 minutes at this temperature to form a solid; and

(d) filtering the solid at this temperature to form the polymorphic form 1 of 8-chloro-6,11-dihydro-11-(4-piperidylidene)-5H-benzo[5,6]-cyclohepta[1,2-b]pyridine hemifumarate which is characterized by a DSC of 224°C ± 2°C.

MAILING ADDRESS OF SENDER:
Peter J. Waibel
Novartis
Corporate Intellectual Property
One Health Plaza, Building 104
East Hanover, NJ 07936-1080
(862) 778-7945

PATENT NO. 6,962,924

FORM PTO-1050

UNITED STATES PATENT AND TRADEMARK OFFICE

# CERTIFICATE OF CORRECTION

PATENT NO : 6,962,924
DATED: : November 8, 2005
INVENTOR(S) : RAY ET AL.

7. A process for preparing polymorph form 2 of 8-chloro-6,11-dihydro-11-(4-piperidylidene)-5H-benzo[5,6]-cyclohepta[1,2-b]pyridine hemifumarate according to Claim 2 comprising:

(i) mixing an ethanolic solution of desloratadine and fumaric acid at a temperature of from about 55°C to about 70°C and stirring for 30-45 minutes after mixing to form a solid; and

(ii) filtering the solid at this temperature to form the polymorphic form 2 of 8-chloro-6,11-dihydro-11-(4-piperidylidene)-5H-benzo[5,6]-cyclohepta[1,2-b]pyridine hemifumarate which is characterized by a DSC of 232°C ± 2°C.

MAILING ADDRESS OF SENDER:
Peter J. Waibel
Novartis
Corporate Intellectual Property
One Health Plaza, Building 104
East Hanover, NJ 07936-1080
(862) 778-7945

PATENT NO. 6,962,924

FORM PTO-1050



OCT 1 1 2005

UNITED STATES PATENT AND TRADEMARK OFFICE

# CERTIFICATE OF CORRECTION

PATENT NO : 6,962,924
DATED: : November 8, 2005
INVENTOR(S) : RAY ET AL.

8. A process for preparing polymorph form 2 of 8-chloro-6,11-dihydro-11-(4-piperidylidene)-5H-benzo[5,6]-cyclohepta[1,2-b]pyridine hemifumarate according to Claim 2 comprising:

(a) dissolving desloratadine in anhydrous ethanol to form an ethanolic solution of desloratadine;

(b) dissolving fumaric acid in anhydrous ethanol to form an ethanolic solution of fumaric acid;

(c) mixing the ethanolic solution of desloratadine and the ethanolic solution of fumaric acid at a temperature of from about 55°C to about 70°C and stirring for 30-45 minutes after mixing to form a solid; and

(d) filtering the solid at this temperature to form the polymorphic form 2 of 8-chloro-6,11-dihydro-11-(4-piperidylidene)-5H-benzo[5,6]-cyclohepta[1,2-b]pyridine hemifumarate which is characterized by a DSC of 232°C ± 2°C.

MAILING ADDRESS OF SENDER:
Peter J. Waibel
Novartis
Corporate Intellectual Property
One Health Plaza, Building 104
East Hanover, NJ 07936-1080
(862) 778-7945

PATENT NO. 6,962,924

FORM PTO-1050



OCT 1 1 2006

## SPE RESPONSE FOR CERTIFICATE OF CORRECTION

**Paper No.: X**

**DATE** : **September 12, 2007**

**TO SPE OF** : ART UNIT **3747**

**SUBJECT** : Request for Certificate of Correction for Appl. No.: **10/621682** Patent No.: **7204396 B1**

A response is requested with respect to a request for a certificate of correction.

With respect to the change(s) requested to correct Office and/or Applicant's errors, should the patent read as shown in the certificate of correction attached herewith or the COCIN document(s), in IFW images for the above-identified patented application? No new matter should be introduced, nor should the scope or meaning of the claims be changed.

If the response is for an IFW, within **7** days, please complete and forward the response, to the employee (named below) via scanning into application images, using document code **COCX**.

**DO NOT SENT TO ATTORNEY**

If the response is for a paper file wrapper, please complete the response and forward the response with the paper file wrapper, to the employee (named below), within **7** days, to:

**Certificates of Correction Branch (CofC)**
**South Tower - 9A22**
**Palm Location 7580**

*VIRGINIA TOLBERT*
**Certificates of Correction Branch**
**703-308-9390 ext. 113**

**Thank You For Your Assistance**

**The request for issuing the above-identified correction(s) is hereby:**
Note your decision on the appropriate box.

| | |
|---|---|
| ☒ **Approved** | **All** changes apply. |
| ☐ **Approved in Part** | Specify below which changes **do not** apply. |
| ☐ **Denied** | State the reasons for denial below. |

**Comments:** _____

STEPHEN K. CRONIN
SUPERVISORY PATENT EXAMINER

**SPE**

3747
**Art Unit**

UNITED STATES PATENT AND TRADEMARK OFFICE

Commissioner for Patents
United States Patent and Trademark Office
P.O. Box 1450
Alexandria, VA 22313-1450
www.uspto.gov

**GENERAL ELECTRIC COMPANY**
**GLOBAL RESEARCH**
**PATENT DOCKET RM. BLDG. K1-4A59**
**NISKAYUNA NY 12309**

COPY MAILED

FEB 07 2005

OFFICE OF PETITIONS

In re Application of :
David Michael Davenport et al :
Application No. 10/621,686 :
Filed: July 16, 2003 :
Attorney Docket No. 130509 :

ON PETITION

This is a decision on the petition, filed February 3, 2005, under 37 CFR 1.313(c)(2) to withdraw the above-identified application from issue after payment of the issue fee.

The petition is **GRANTED.**

The above-identified application is withdrawn from issue for consideration of a submission under 37 CFR 1.114 (request for continued examination). See 37 CFR 1.313(c)(2).

**Petitioner is advised that the issue fee paid on January 19, 2005 in the above-identified application cannot be refunded. If, however, the above-identified application is again allowed, petitioner may request that it be applied towards the issue fee required by the new Notice of Allowance.**[1]

Telephone inquiries should be directed to the undersigned at (571) 272-3208.

The examiner of Technology Center AU 3662 will consider the request for continued examination under 37 CFR 1.114.

Karen Creasy

Karen Creasy
Petitions Examiner
Office of Petitions
Office of the Deputy Commissioner
for Patent Examination Policy

---

[1] The request to apply the issue fee to the new Notice may be satisfied by completing and returning the new Issue Fee Transmittal Form PTOL-85(b), which includes the following language thereon: "Commissioner for Patents is requested to apply the Issue Fee and Publication Fee (if any) or re-apply any previously paid issue fee to the application identified above." Petitioner is advised that, whether a fee is indicated as being due or not, the Issue Fee Transmittal Form **must** be completed and timely submitted to avoid abandonment. Note the language in bold text on the first page of the Notice of Allowance and Fee(s) Due (PTOL-85).

UNITED STATES PATENT AND TRADEMARK OFFICE

Commissioner for Patents
United States Patent and Trademark Office
P.O. Box 1450
Alexandria, VA 22313-1450
www.uspto.gov

EDWARDS VACUUM, INC.
55 MADISON AVENUE
SUITE 400
MORRISTOWN NJ 07960

**COPY MAILED**

DEC 1 1 2008

**OFFICE OF PETITIONS**

In re Application of
Bruce Gordon Ramsay
Application No. 10/621,700
Filed: July 17, 2003
Attorney Docket No. **99A429**

ON PETITION

This is a decision on the petition under 37 CFR 1.137(b)[1], filed November 24, 2008, to revive the above-identified application.

The petition is **GRANTED**.

This application became abandoned for failure to timely reply to the Final Office Action mailed July 11, 2007. A response was filed December 13, 2007 (December 10, 2007 certificate of mail date) with a three month extension of time, but by Advisory Action of December 21, 2007, petitioner was advised that the response did not place the application in condition for allowance. Accordingly, the Notice of Abandonment was mailed February 12, 2008.

Petitioner has submitted a Request for Continued Examination (RCE) and an amendment as the submission required under 37 CFR 1.114.

This matter is being referred to Technology Center 1792 for processing of the RCE.

Telephone inquiries related to this decision should be directed to the undersigned Petitions Attorney at (571) 272-3212.

Patricia Faison-Ball

Patricia Faison-Ball
Senior Petitions Attorney
Office of Petitions

---

[1]Effective December 1, 1997, the provisions of 37 CFR 1.137(b) now provide that where the delay in reply was unintentional, a petition may be filed to revive an abandoned application or a lapsed patent pursuant to 37 CFR 1.137(b). A grantable petition filed under the provisions of 37 CFR 1.137(b) must be accompanied by:

(1) the required reply, unless previously filed. In a nonprovisional application abandoned for failure to prosecute, the required reply may be met by the filing of a continuing application. In an application or patent, abandoned or lapsed for failure to pay the issue fee or any portion thereof, the required reply must be the payment of the issue fee or any outstanding balance thereof.

(2) the petition fee as set forth in 37 CFR 1.17(m);

(3) a statement that the entire delay in filing the required reply from the due date for the reply until the filing of a grantable petition pursuant to 37 CFR 1.137(b) was unintentional. The Commissioner may required additional information where there is a question whether the delay was unintentional; and

(4) any terminal disclaimer (and fee as set forth in 37 CFR 1.20(d)) required pursuant to 37 CFR 1.137(c)).

UNITED STATES PATENT AND TRADEMARK OFFICE

Commissioner for Patents
United States Patent and Trademark Office
P.O. Box 1450
Alexandria, VA 22313-1450
www.uspto.gov

EDWARDS VACUUM, INC.
55 MADISON AVENUE
SUITE 400
MORRISTOWN NJ 07960

**COPY MAILED**

APR 30 2009

**OFFICE OF PETITIONS**

In re Application of
Bruce Gordon Ramsay
Application No. 10/621,700
Filed: July 17, 2003
Attorney Docket No: **99A429**

ON PETITION

This is a decision on the petition filed April 14, 2009 under 37 CFR 1.137(b),[1] to revive the above-identified application.

The petition under 37 CFR 1.137 (b) is **GRANTED**.

This application became abandoned for failure to timely pay the issue fee on or before April 13, 2009. Accordingly, a Notice of Abandonment was mailed April 17, 2009 after the filing of the instant petition.

The issue fee in the amount of $1510.00, petition fee in the amount of $1620.00 and publication fee in the amount of $300 have been charged to deposit account no, 50-4244. All other requirements of 37 CFR 1.137(b) having now been met, this application file is being forwarded to the Publishing Division to be processed into a patent.

Telephone inquiries concerning this matter may be directed to the undersigned Petitions Attorney at (571) 272-3212.

Patricia Faison-Ball
Senior Petitions Attorney
Office of Petitions

---

[1]Effective December 1, 1997, the provisions of 37 CFR 1.137(b) now provide that where the delay in reply was unintentional, a petition may be filed to revive an abandoned application or a lapsed patent pursuant to 37 CFR 1.137(b). A grantable petition filed under the provisions of 37 CFR 1.137(b) must be accompanied by:

(1) the required reply, unless previously filed. In a nonprovisional application abandoned for failure to prosecute, the required reply may be met by the filing of a continuing application. In a nonprovisional application filed on or after June 8, 1995, and abandoned for failure to prosecute, the required reply may also be met by the filing of a request for continued examination in compliance with § 1.114. In an application or patent, abandoned or lapsed for failure to pay the issue fee or any portion thereof, the required reply must be the payment of the issue fee or any outstanding balance thereof.

(2) the petition fee as set forth in 37 CFR 1.17(m);

(3) a statement that the entire delay in filing the required reply from the due date for the reply until the filing of a grantable petition pursuant to 37 CFR 1.137(b) was unintentional. The Commissioner may required additional information where there is a question whether the delay was unintentional; and

(4) any terminal disclaimer (and fee as set forth in 37 CFR 1.20(d)) required pursuant to 37 CFR 1.137(c)).

## SPE RESPONSE FOR CERTIFICATE OF CORRECTION

Paper No.: _____

DATE : March 23 2006

TO SPE OF : ART UNIT 3765

SUBJECT : Request for Certificate of Correction for Appl. No.: 10/621713 Patent No.: 6,978,808

Please respond to this request for a certificate of correction within 7 days.

Please review the requested changes/corrections as shown in the **COCIN** document(s) in the IFW application image. No new matter should be introduced, nor should the scope or meaning of the claims be changed.

Please complete the response (see below) and forward the completed response to scanning using document code **COCX**.


**Magdalene Talley**

Certificates of Correction Branch

703-308-9390 ext. 116


**Thank You For Your Assistance**

**The request for issuing the above-identified correction(s) is hereby:**

Note your decision on the appropriate box.

- [x] **Approved** — All changes apply.
- [ ] **Approved in Part** — Specify below which changes **do not** apply.
- [ ] **Denied** — State the reasons for denial below.

**Comments:** _____

SPE

3765

Art Unit

UNITED STATES PATENT AND TRADEMARK OFFICE

Commissioner for Patents
United States Patent and Trademark Office
P.O. Box 1450
Alexandria, VA 22313-1450
www.uspto.gov

**CARR & FERRELL LLP**
**2200 GENG ROAD**
**PALO ALTO, CA 94303**

MAILED

MAY 0 8 2009

OFFICE OF PETITIONS

| | | |
|---|---|---|
| In re Application of | : | |
| Johnson et al. | : | DECISION ON PETITION |
| Application No. 10/621,726 | : | TO WITHDRAW |
| Filed: July 17, 2003 | : | FROM RECORD |
| Attorney Docket No. P-9275-US | : | |

This is a decision on the Request to Withdraw as attorney or agent of record under 37 C.F.R. § 1.36(b), filed January 23, 2006.

The request is **NOT APPROVED** because it is moot.

A review of the file record indicates that on June 6, 2006 the power of attorney to Carr & Ferrell, LLP was revoked by the assignee of the patent application. Accordingly, the request to withdraw under 37 C.F.R. § 1.36(b) is moot.

All future communications from the Office will be directed to the below-listed address until otherwise notified by applicant.

Telephone inquires concerning this decision should be directed to the undersigned at 571-272- 7751. All other inquires concerning either the examination or status of the application should be directed to the Technology Center.

Joan Olszewski

Joan Olszewski
Petitions Examiner
Office of Petitions

cc: Eitan Law Group
C/O LandonIP, Inc.
Suite 450
1700 Diagonal Road
Alexandria VA 22314

United States
Patent And
Trademark Office

P.O. Box 1450, Alexandria, Virginia 22313-1450 – www.uspto.gov

**PETITION DECISION**

04/02/04

Blakely, Sokoloff, Taylor & Zafman LLP
12400 Wilshire Blvd
Seventh Floor
Los Angeles, Ca 90025-1030

Dear Applicant:

The Box PG Pub replacement drawings for application number 10/621745 received on 03/05/04 by the U. S. Patent and Trademark Office will be included for patent publication.

Telephone inquiries should be directed to Kaletus King, Office of Pre-Grant Publication 703 605-4283.

Kaletus King

Signature of Reviewer, Office of Pre-Grant Publication

UNITED STATES PATENT AND TRADEMARK OFFICE

Commissioner for Patents
United States Patent and Trademark Office
P.O. Box 1450
Alexandria, VA 22313-1450
www.uspto.gov

MAILED

APR 21 2010

OFFICE OF PETITIONS

**MIRUS BIO LLC**
**545 SCIENCE DRIVE**
**SUITE A**
**MADISON WI 53711**

| | | |
|---|---|---|
| In re Application of | : | |
| David L. LEWIS, et al | : | |
| Application No. 10/621,760 | : | DECISION ON PETITION |
| Filed: July 17, 2003 | : | |
| Attorney Docket No. MIRUS.030.09.2 | : | |

This is a decision on the petition under the unintentional provisions of 37 CFR 1.137(b), filed January 22, 2010, to revive the above-identified application.

The petition is **GRANTED**.

The application became abandoned for failure to reply in a timely manner to the non-final Office action mailed, December 23, 2008, which set a shortened statutory period for reply of three (3) months. No extensions of time under the provisions of 37 CFR 1.136(a) were obtained. Accordingly, the application became abandoned on March 24, 2009.

The petition satisfies the requirements of 37 CFR 1.137(b) in that petitioner has supplied (1) the reply in the form of an amendment; (2) the petition fee of $810; and (3) a proper statement of unintentional delay.

Telephone inquiries concerning this decision should be directed to the undersigned at (571) 272-6735.

This application is being referred to Technology Center AU 1633 for appropriate action by the Examiner in the normal course of business.

/DCG/
Diane C. Goodwyn
Petitions Examiner
Office of Petitions

## SPE RESPONSE FOR CERTIFICATE OF CORRECTION

Paper No.: _____

**DATE** : 1-25-07

**TO SPE OF** : ART UNIT 2858

**SUBJECT** : Request for Certificate of Correction on Patent No.: 6909292 B1 (10/621767

A response is requested with respect to the accompanying request for a certificate of correction.

Please complete this form and return with file, within **7** days to:
Palm location **7580, Certificates of Correction Branch – South Tower – 9A22**
If response is for an IFW, **return to employee (named below) via PUBSCofC Team in MADRAS.**
With respect to the change(s) requested, correcting Office and/or Applicant's errors, should the patent read as shown in the certificate of correction (COCIN)? No new matter should be introduced, nor should the scope or meaning of the claims be changed.

Should inventor be added? Thanks

Eva James

**Thank You For Your Assistance**

**Certificates of Correction Branch**
***Tel. No. 703-305-8309***

**The request for issuing the above-identified correction(s) is hereby:**
Note your decision on the appropriate box.

- ☐ **Approved** — **All** changes apply.
- ☐ **Approved in Part** — Specify below which changes **do not** apply.
- ☒ **Denied** — State the reasons for denial below.

**Comments:**

The papers submitted 9/18/06 do not include a statement from inventor Spyros Kavadias, as required by 37 CFR 1.324(b)(2).

ANDREW H. HIRSHFELD
SUPERVISORY PATENT EXAMINER
TECHNOLOGY CENTER 2800
SPE

2858
Art Unit

UNITED STATES PATENT AND TRADEMARK OFFICE

Commissioner for Patents
United States Patent and Trademark Office
P.O. Box 1450
Alexandria, VA 22313-1450
www.uspto.gov

Date Mailed : 3-13-07

Patent No.: 6,909,292
Patent Issued : June 21, 2005
Inventor(s): Spyros Kavadias
Title: METHOD FOR SUPPRESSING EVEN ORDER HARMONICS IN A DEVICE THT UTILIZES TRASNSCONDUCTORS
Docket No.: 17469US02

Re: Request for Certificate of Correction

Consideration has been given your request for the issuance of a certificate of correction for the above-identified patent under the provisions of Rule 1.322or 1.323.

The papers submitted 09/18/06 do not include a statement from inventor Spyros Kavasias, as required by 37 CFR 1.324 (b)(2).

In view of the foregoing, your request is again hereby denied. However, further consideration will be given upon receipt of a request for reconsideration directed to Decisions & Certificates of Correction Branch.

Eva James
For Cecelia B. Newman
Certificate of Correction Branch
(703) 308-9390 ext. 124 or ext. 102

Ognyan I. Beremski
McAndrews, Held & Malloy
500 West Madison Street
Chicago, Illinois 60661

ej

## SPE RESPONSE FOR CERTIFICATE OF CORRECTION

DATE : 9-19-07

Paper No.: _____

TO SPE OF : ART UNIT 2858

SUBJECT : Request for Certificate of Correction for Appl. No. 6909292 B1 (10/621767

Please respond to this request for a certificate of correction within 7 days.

Please review the requested changes/corrections as shown in the **COCIN** document(s) in the IFW application image. No new matter should be introduced, nor should the scope or meaning of the claims be changed.

Please complete the response (see below) and forward the completed response to scanning using document code **COCX**.

Reconsideration for adding of Inventor

Thanks.

Eva James

Certificates of Correction Branch

703-308-9390 ext. 116

**Thank You For Your Assistance**

**The request for issuing the above-identified correction(s) is hereby:**

Note your decision on the appropriate box.

- ☐ **Approved** — **All** changes apply.
- ☐ **Approved in Part** — Specify below which changes **do not** apply.
- ☐ **Denied** — State the reasons for denial below.

**Comments:** _____

_____

_____

_____

_____

_____ SPE

_____ Art Unit

12-

## SPE RESPONSE FOR CERTIFICATE OF CORRECTION

DATE : 12-4-07

Paper No.: ____

TO SPE OF : ART UNIT 2858

SUBJECT : Request for Certificate of Correction on Patent No.: 6909292 B1 / 10/621762

A response is requested with respect to the accompanying request for a certificate of correction.

Please complete this form and return with file, within 7 days to:
Palm location **7580, Certificates of Correction Branch – South Tower – 9A22**
If response is for an IFW, **return to employee (named below) via PUBSCofC Team in MADRAS.**
With respect to the change(s) requested, correcting Office and/or Applicant's errors, should the patent read as shown in the certificate of correction (COCIN)? No new matter should be introduced, nor should the scope or meaning of the claims be changed.

Reconsideration by Adding inventors

**Thank You For Your Assistance**

**Certificates of Correction Branch** 124
***Tel. No. 703-308-9390 ext.***

**The request for issuing the above-identified correction(s) is hereby:**
Note your decision on the appropriate box.

- ☐ **Approved** — All changes apply.
- ☐ **Approved in Part** — Specify below which changes **do not** apply.
- ☐ **Denied** — State the reasons for denial below.

Comments:

SPE

Art Unit

## SPE RESPONSE FOR CERTIFICATE OF CORRECTION

DATE : 9-19-07

Paper No.: _____

TO SPE OF : ART UNIT 2858

SUBJECT : Request for Certificate of Correction for Appl. No 6909292 B1 (10/621767

Please respond to this request for a certificate of correction within 7 days.

Please review the requested changes/corrections as shown in the **COCIN** document(s) in the IFW application image. No new matter should be introduced, nor should the scope or meaning of the claims be changed.

Please complete the response (see below) and forward the completed response to scanning using document code **COCX**.

Reconsideration for adding of Inventor

Thanks

E M Jones
Certificates of Correction Branch
703-308-9390 ext. 116

**Thank You For Your Assistance**

**The request for issuing the above-identified correction(s) is hereby:**
Note your decision on the appropriate box.

- ☒ **Approved** — All changes apply.
- ☐ **Approved in Part** — Specify below which changes **do not** apply.
- ☐ **Denied** — State the reasons for denial below.

**Comments:** V.N 11/11/2009

11/12/09

DIEGO GUTIERREZ
SUPERVISORY PATENT EXAMINER

2831

SPE — Art Unit

PTOL-306 (REV. 7/03)

U.S. DEPARTMENT OF COMMERCE Patent and Trademark Office

UNITED STATES PATENT AND TRADEMARK OFFICE

COMMISSIONER FOR PATENTS
UNITED STATES PATENT AND TRADEMARK OFFICE
P.O. BOX 1450
ALEXANDRIA, VA 22313-1450
www.uspto.gov

AMGEN INC.
MAIL STOP 28-2-C
ONE AMGEN CENTER DRIVE
THOUSAND OAKS, CA 91320-1799

**COPY MAILED**

JUN 26 2008

**OFFICE OF PETITIONS**

In re Application of :
Alison M. Bendele, et. al. :
Application No. 10/621,784 :
Filed: July 16, 2003 :
Attorney Docket No. A-398G :

ON PETITION

This is a decision on the petition under 37 CFR 1.137(b), on November 16, 2007, to revive the above-identified application.

The application became abandoned for failure to respond to the Restriction/Election Requirement mailed June 13, 2006. A Notice of Abandonment was mailed on February 8, 2007.

It is not apparent whether the person signing the instant petition was ever given a power of attorney or authorization of agent to prosecute the above-identified application. However, in accordance with 37 CFR 1.34(a), the signature of Randolph N. Mohr appearing on the petition shall constitute a representation to the United States Patent and Trademark Office that he is authorized to represent the particular party in whose behalf he acts.

The petition satisfies the requirements of 37 CFR 1.137(b) in that petitioner has supplied (1) an election; (2) the petition fee of $1,540; and (3) a proper statement of unintentional delay. Therefore, the petition is **GRANTED**.

This application file is being referred to Technology Center Art Unit 1649 for further processing.

Telephone inquiries concerning this decision should be directed to the undersigned at (571) 272-3226.

Andrea Smith
Petitions Examiner
Office of Petitions

UNITED STATES PATENT AND TRADEMARK OFFICE

Commissioner for Patents
United States Patent and Trademark Office
P.O. Box 1450
Alexandria, VA 22313-1450
www.uspto.gov

DEEPAK MALHOTRA
P O BOX 101
SPOKANE, WA 99210

FAX RECEIVED

AUG 04 2005

OFFICE OF PETITIONS

In re Patent No. 6,873,304 :
Issue Date: March 29, 2005 :
Application No. 10/621,799 :DECISION ON PETITION
Filed: July 17, 2003 :
Attorney Docket No. MA51-001 :

This is a decision on the petition, filed March 31, 2005, seeking revival under the unintentional provisions of 37 CFR 1.137(b).

The petition is **dismissed** as moot.

A review of the file record fails to disclose that this application is in fact abandoned. If petitioner maintains that this case is abandoned, petitioner should promptly inform the Office as to why a petition to revive is necessary.

It is noted on the petition that the reply is indicated to be in the form of a "Rescission of Previous Nonpublication Request." If petitioner is seeking revival under the unintentional provisions for failure to timely notify the U.S. Patent and Trademark (USPTO) within 45 days of the filing of an application in a foreign country, or under a multinational treaty that requires publication of applications eighteen months after filing, then petitioner should petition to revive under the unintentional provisions of 37 CFR 1.137(f). A form for the petition under 37 CFR 1.137(f) accompanies this decision on petition for petitioner's convenience. Further, if petitioner is seeking revival for failure to timely notify the Office of a foreign filing, then petitioner is advised that the date of filing of the foreign application must be provided.

Petitioner may request a refund of the $750 petition fee submitted if petitioner is not seeking revival under the unintentional provisions of 37 CFR 1.137(f). Additionally, as this case matured into Patent No. 6,873,304, the $300 publication fee submitted is not necessary. A refund of these fees may be requested by writing to: Mail Stop 16, Commissioner for Patents, P. O. Box 1450, Alexandria, VA 22313-1450. A copy of this decision on petition should accompany petitioner's request.

Further correspondence with respect to this matter should be addressed as follows:

By mail: Mail Stop PETITIONS
Commissioner for Patents
Post Office Box 1450
Alexandria, VA 22313-1450

By hand: Customer Service Window
Mail Stop Petitions
Randolph Building
401 Dulany Street
Alexandria, VA 22314

By fax: (571) 273-8300
ATTN: Office of Petitions

Any questions concerning this matter may be directed to the undersigned at (571) 272-3218.

Frances Hicks

Frances Hicks
Petitions Examiner
Office of Petitions

ATTACHMENT: Petition to Revive Form PTO/SB/64a

UNITED STATES PATENT AND TRADEMARK OFFICE

Commissioner for Patents
United States Patent and Trademark Office
P. O. Box 1450
Alexandria, VA 22313-1450
www.uspto.gov

DEEPAK MALHOTRA
P O BOX 101
SPOKANE, WA 99210

COPY MAILED

OCT 0 6 2005

OFFICE OF PETITIONS

| | |
|---|---|
| In re Patent No. 6,873,304 | : |
| Issue Date: March 29, 2005 | :DECISION GRANTING PETITION |
| Application No. 10/621,799 | :UNDER 37 CFR 1.137(b) |
| Filed: July 17, 2003 | : |
| Attorney Docket No. MA51-001 | : |

This is a decision on the petition, filed August 19, 2005, which is being treated as a petition under 37 CFR 1.137(b) to accept an unintentionally delayed notification to the U.S. Patent and Trademark Office (USPTO) of the filing of an application in a foreign country or under a multinational treaty that requires publication of applications eighteen months after filing. *See* 37 CFR 1.137(f).

The petition under 37 CFR 1.137(b) is **GRANTED**.

Petitioner states that the instant nonprovisional application is the subject of an application filed in an eighteen month publication country on November 29, 2004. However, the USPTO was unintentionally not notified of this filing within 45 days subsequent to the filing of the subject application in an eighteen month publication country. Therefore, pursuant to the provisions of 35 U.S.C. § 122(b)(2)(B)(iii) and 37 CFR 1.213(c), petitioner failed to timely notify the USPTO of the filing of a counterpart application in a foreign country or under a multilateral international agreement that requires publication of applications 18 months after filing.

A petition under 37 CFR 1.137(b) to accept an unintentionally delayed notification to the USPTO of the filing of a counterpart application in an eighteen month publication country must be accompanied by:

(1) the required reply which is met by the notification of such filing in a foreign country or under a multinational treaty;

(2) the petition fee as set forth in 37 CFR 1.17(m); and
(3) a statement that the entire delay in filing the required reply from the due date of the reply until the filing of a grantable petition was unintentional.

The instant petition has been found to be in compliance with 37 CFR 1.137(b). Accordingly, the failure to timely notify the USPTO of a foreign or international filing within 45 days as provided by 35 U.S.C. § 122(b)(2)(B)(iii) is accepted as having been unintentionally delayed.

This application matured into Patent No. 6,873,304 on March 29, 2005. Therefore, no further action herein is required.

Any inquiries concerning this decision may be directed to the undersigned at (571) 272-3218.

Frances Hicks
Petitions Examiner
Office of Petitions

UNITED STATES PATENT AND TRADEMARK OFFICE

COMMISSIONER FOR PATENTS
UNITED STATES PATENT AND TRADEMARK OFFICE
P.O. BOX 1450
ALEXANDRIA, VA 22313-1450
www.uspto.gov

MCI, INC
1133 19TH STREET NW
WASHINGTON, DC 20036

COPY MAILED

AUG 0 5 2005

OFFICE OF PETITIONS

In re Application of :
Carol Y. Devine, et al. :
Application No. 10/621,800 :
Filed: July 18, 2003 :
Attorney Docket No. COS97092C1 :

ON PETITION

This is a decision on the petition, filed August 4, 2005, under 37 CFR 1.313(c)(2) to withdraw the above-identified application from issue after payment of the issue fee.

The petition is **GRANTED**.

The above-identified application is withdrawn from issue for consideration of a submission under 37 CFR 1.114 (request for continued examination). See 37 CFR 1.313(c)(2).

***Petitioner is advised that the issue fee paid on June 28, 2005, in the above-identified application cannot be refunded. If, however, the above-identified application is again allowed, petitioner may request that it be applied towards the issue fee required by the new Notice of Allowance.*** [1]

Telephone inquiries relating to this decision should be directed to the undersigned at (571) 272-3204.

The application is being referred to Technology Center AU 2131 for further processing of the request for continued examination under 37 CFR 1.114.

Sherry D. Brinkley
Petitions Examiner
Office of Petitions

[1]The request to apply the issue fee to the new Notice may be satisfied by completing and returning the new Issue Fee Transmittal Form PTOL-85(b), which includes the following language thereon: "Commissioner for Patents is requested to apply the Issue Fee and Publication Fee (if any) or re-apply any previously paid issue fee to the application identified above." Petitioner is advised that, whether a fee is indicated as being due or not, the Issue Fee Transmittal Form **must** be completed and timely submitted to avoid abandonment. Note the language in bold text on the first page of the Notice of Allowance and Fee(s) Due (PTOL-85).

UNITED STATES PATENT AND TRADEMARK OFFICE

Commissioner for Patents
United States Patent and Trademark Office
P.O. Box 1450
Alexandria, VA 22313-1450
www.uspto.gov

SEP 14 2007

LOUIS J. WILLE
BRISTOL-MYERS SQUIBB COMPANY
PATENT DEPARTMENT
P O BOX 4000
PRINCETON NJ 08543-4000

| | |
|---|---|
| In re Application of | : |
| Arthur M. P. Doweyko et al | : |
| Serial No.: 10/621,807 | : PETITION DECISION |
| Filed: July 17, 2003 | : |
| Attorney Docket No.: D0250 NP | : |

This is a decision on the PETITION FOR ACCEPTANCE OF COLOR DRAWINGS UNDER 37 CFR 1.84(a)(2). The petition was filed June 22, 2007. Entry of color drawings requires: 1) three sets of the color drawings, 2) a proper amendment to the specification indicating color photographs or drawings are present in the file, and 3) the required fee under 37 CFR 1.17(h).

A review of the application record indicates that the petition meets all of the requirements for acceptance of color drawings. This is not to be construed that all of the drawings are accepted, only that the color drawings are acceptable.

The petition is **GRANTED**.

Should there be any questions with respect to this decision, please contact William R. Dixon, Jr., by mail addressed to: Director, Technology Center 1600, at the address listed above, or by telephone at 571-272-0519 or by facsimile transmission at 571-273-8300.

William R. Dixon, Jr.
Special Program Examiner
Technology Center 1600

UNITED STATES PATENT AND TRADEMARK OFFICE

Commissioner for Patents
United States Patent and Trademark Office
P.O. Box 1450
Alexandria, VA 22313-1450
www.uspto.gov

DONALD F. HAAS
SHELL OIL COMPANY
LEGAL - INTELLECTUAL PROPERTY
P.O. BOX 2463
HOUSTON TX 77252-2463

COPY MAILED

JAN 3 1 2005

OFFICE OF PETITIONS

| | |
|---|---|
| In re Application of | : |
| Hendrik Dirkzwager et al. | : |
| Application No. 10/621,816 | : DECISION ON PETITION |
| Filed: July 17, 2003 | : UNDER 37 CFR 1.78(a)(3) |
| Attorney Docket No. TS104102(US) | : |

This is a decision on the petition under 37 CFR 1.78(a)(3), filed October 15, 2004, to accept an unintentionally delayed claim under 35 U.S.C. § 120 for the benefit of priority to the prior-filed nonprovisional applications set forth in the amendment filed concurrently with the instant petition.

The petition is **DISMISSED AS MOOT**.

A petition for acceptance of a claim for late priority under 37 CFR 1.78(a)(3) is only applicable to those applications filed on or after November 29, 2000.

Along with the instant petition under 37 CFR §§ 1.78(a)(3), petitioner has submitted an amendment to the first sentence of the specification following the title to include a reference to the prior-filed nonprovisional application.

The instant pending nonprovisional application was filed on July 17, 2003, and was pending at the time of the filing of the instant petition. While a reference to the prior-filed nonprovisional application was not included in an ADS or in the first sentence of the specification following the title, reference nevertheless was made in the transmittal letter and the declaration filed with the above identified application.

The current procedure where a claim for priority under 37 CFR §§ 1.78(a)(3) is not included in the first sentence of the specification or in an ADS but does appear either in the oath or declaration or a transmittal letter filed with the application and the Office notes the claim for priority, no petition will be required to accept a late claim for priority. This is because the application would have been scheduled for publication on the basis of the information concerning the claim submitted elsewhere in the application with the time period set forth in 37 CFR §§ 1.78(a)(2)(ii). However, on the other hand, if the USPTO does not note the claim for priority to the prior-filed application(s) set forth in

the oath or declaration or transmittal letter submitted with the application, a petition will be required to accept a late claim for priority under 37 CFR §§ 1.78(a)(3).[1] In the instant case, the Office noted the claim for priority of the prior-filed nonprovisional application in the transmittal letter filed with the application, as shown by its inclusion on the filing receipt.

In vew of the above, the $130.00 petition fee submitted is unnecessary and will be refunded to petitioner's deposit account in due course.

Any questions concerning this decision on petition may be directed to Senior Petitions Attorney Patricia Faison-Ball at (571) 272-3212. All other inquiries concerning either the examination procedures or status of the application should be directed the Technology Center.

This matter is being referred to Technology Center Art Unit 1621 for appropriate processing of the amendment filed October 15, 2004.

Frances Hicks

Frances Hicks
Petitions Examiner
Office of Petitions
Office of the Deputy Commissioner
for Patent Examination Policy

---

[1] *Note* MPEP 201.11 (V), page 200-75 (Rev. 1. Feb. 2004 and 66 Federal Register 67087 at 67089 (Dec. 28, 2001), effective December 28, 2001.

UNITED STATES PATENT AND TRADEMARK OFFICE

Commissioner for Patents
United States Patent and Trademark Office
P.O. Box 1450
Alexandria, VA 22313-1450
www.uspto.gov

JAN 18 2006

Brant T. Maurer
CNH America LLC
INTELLECTUAL PROPERTY LAW DEPARTMENT
700 State Street
Racine, WI 53404

| | | |
|---|---|---|
| In re Application of | : | **DECISION ON PETITION** |
| Robert A. Matousek et al. | : | **TO WITHDRAW THE** |
| Application No. 10/621,835 | : | **HOLDING OF** |
| Filed: July 16, 2003 | : | **ABANDONMENT** |

For: GRAIN HARVESTING MULTI-ANGULAR INCLINED DELIVERY CONVEYOR AND DRIVE

This is a decision on applicant's Petition to Withdraw the Holding of Abandonment under 37 CFR 1.181 filed in the United States Patent and Trademark Office on March 7, 2005.

The petition is **DISMISSED**.

A review of the file record indicates that the application was held abandoned for failure to timely file a response to the Office action mailed July 20, 2004, which set a three-month shortened statutory period. No response was received and a Notice of Abandonment was mailed on March 1, 2005.

Petitioner contends that a response was filed on October 20, 2004. In support thereof, petitioner submits, a copy of a response bearing a Certificate of Mailing signed by Stephen R. Matthews and dated October 20, 2004 and a copy of the postcard receipt bearing USPTO stamp dated October 26, 2004.

It is noted that the Application number on the amendment and post card receipt is 10/621,815 instead of 10/621,835. Furthermore, the receipt date of October 26, 2004 on the postcard is beyond the date the response was due.

Petitioner's evidence of a timely filing based on a Certificate of Mailing is considered to be insufficient. In this regard, any petition to withdraw the holding of abandonment based upon a Certificate of Mailing must include the following requirements:

(1) A copy of the original response bearing a signed Certificate of Mailing which includes the date of signing; and

(2) A statement under 37 CFR 1.8(b)(3) attesting to the personal knowledge of transmitting the original response on the date indicated on the Certificate of Mailing (see 37 CFR 1.8 and MPEP 512), by the person who signed the certificate.

While meeting requirement (1) above the petition fails, under requirement (2), to also include a statement under 37 CFR 1.8(b)(3) attesting to the personal knowledge of sending the original response by Certificate of Mailing on the date indicated on the certificate, by the person who signed the certificate, in this instance Stephen R. Matthews.

Petitioner's evidence of a timely filing based on the postcard receipt is considered to be insufficient. In this regard, the date stamped on the post card receipt is October 26, 2004. Applicant's response was due October 20, 2004.

Any request for reconsideration of this decision must be submitted within TWO (2) MONTHS from the mail date of this decision. Extensions of time under 37 CFR 1.136(b) are permitted. The reconsideration request should include a cover letter entitled "Renewed Petition to Withdraw the Holding of Abandonment Under 37 CFR 1.81."

Kenneth J. Dorner
Special Programs Examiner
Patent Technology Center 3600
(571) 272-6587

KJD/bkg: 1/11/2006

UNITED STATES PATENT AND TRADEMARK OFFICE

Commissioner for Patents
United States Patent and Trademark Office
P.O. Box 1450
Alexandria, VA 22313-1450
www.uspto.gov

CNH AMERICA LLC
INTELLECTUAL PROPERTY LAW DEPARTMENT
700 STATE STREET
RACINE WI 53404

**COPY MAILED**

APR 2 4 2006

**OFFICE OF PETITIONS**

| | | |
|---|---|---|
| In re Application of | : | |
| Matousek et al. | : | |
| Application No. 10/621,835 | : | DECISION ON PETITION |
| Filed: July 16, 2003 | : | |
| Attorney Docket No. 17325 | : | |

This is a decision on the renewed petition under 37 CFR 1.181, filed March 15, 2006, requesting that the Office withdraw the holding of abandonment of the above-identified application.

This application was held abandoned for failure to respond in a timely manner to the nonfinal Office action mailed on July 20, 2004, which set a three-month statutory period for reply. A Notice of Abandonment was mailed on March 1, 2005.

On March 15, 2006, petitioners filed this renewed petition and submitted a "Statement by Stephen R. Matthews Under 37 CFR 1.8(b)(3) Attesting to the Personal Knowledge of Mailing Amendment and Certificate of Mailing." Petitioners assert that they filed a timely and proper response in the form of an amendment with a certificate of mailing dated October 20, 2004. A copy of the response accompanies this petition.

Upon a review of the record, it appears that the application number in the heading of the response identified Application No. "10/621,815" rather than the intended Application No. "10/621,835." The amendment was located in the file of Application No. 10/621,815. A review of the correspondence indicates that the USPTO received the response on October 26, 2004 (certificate of mailing dated October 20, 2004), but it was not matched with the file due to the incorrect application number.

Under current Office procedure, a response that has an incorrect application number is handled in accordance with MPEP Section 508.03. If a paper having an incorrect application number contains sufficient information to identify the correct application and was timely received at the Office, the holding of abandonment will be withdrawn. In reviewing the papers, it is concluded that there was sufficient information thereon to associate the papers with the present application file.

For the reasons stated above, the petition is **granted**. The Notice of Abandonment is hereby withdrawn and the application is returned to pending status. The Office will transfer the response of October 26, 2004 (certificate of mailing dated October 20, 2004) from Application No. "10/621,815" to the intended Application No. "10/621,835."

The matter is being referred to Technology Center Art Unit 3651 for a review of the amendment filed October 26, 2004 (certificate of mailing dated October 20, 2004).

Telephone inquiries regarding this decision may be directed to the undersigned at (571) 272-3211. All other questions regarding the status of the application or the examination process should be directed to the Technology Center.

Christina Tartera Donnell

Christina Tartera Donnell
Senior Petitions Attorney
Office of Petitions

UNITED STATES PATENT AND TRADEMARK OFFICE

Commissioner for Patents
United States Patent and Trademark Office
P.O. Box 1450
Alexandria, VA 22313-1450
www.uspto.gov

LAHIVE & COCKFIELD, LLP
ONE POST OFFICE SQUARE
BOSTON MA 02109-2127

COPY MAILED
MAR 04 2008

| | | |
|---|---|---|
| In re Application of | : | |
| Sodder et al. | : | |
| Application No. 10/621,849 | : | DECISION ON PETITION |
| Filed: July 16, 2003 | : | |
| Attorney Docket No. ENB-001 | : | |

This is a decision on the petition, filed January 8, 2008, which is being treated as a petition under 37 CFR 1.181 (no fee) requesting withdrawal of the holding of abandonment in the above-identified application.

The petition is **GRANTED**.

This application was held abandoned for failure to reply to the non-final Office action mailed May 29, 2007, which set a three (3) month shortened statutory period for reply. A Notice of Abandonment was mailed on December 6, 2007.

Petitioner asserts that the Office action dated May 29, 2007 was not received.

A review of the written record indicates no irregularity in the mailing of the Office action, and, in the absence of any irregularity, there is a strong presumption that the Office action was properly mailed to the practitioner at the address of record. This presumption may be overcome by a showing that the Office action was not in fact received. In this regard, the showing required to establish the failure to receive the Office action must consist of the following:

1. a statement from practitioner stating that the Office action was not received by the practitioner;

2. a statement from the practitioner attesting to the fact that a search of the file jacket and docket records indicates that the Office action was not received; and

3. a copy of the docket record where the nonreceived Office action would have been entered had it been received and docketed must be attached to and referenced in the practitioner's statement.

*See* MPEP § 711.03(c) under subheading "Petition to Withdraw Holding of Abandonment Based on Failure to Receive Office Action," and "Withdrawing the Holding of Abandonment When Office Actions Are Not Received," 1156 Official Gazette 53 (November 16, 1993).

The petition satisfies the above-stated requirements. Accordingly, the application was not abandoned in fact.

In view of the above, the Notice of Abandonment is hereby vacated and the holding of abandonment withdrawn.

This application is being referred to the Technology Center technical support staff of Art Unit 2616 for re-mailing the Office action of May 29, 2007. The period for reply will run from the mailing date of the Office action.

Charlema Grant

Charlema Grant
Petitions Attorney
Office of Petitions

UNITED STATES PATENT AND TRADEMARK OFFICE

Commissioner for Patents
United States Patent and Trademark Office
P.O. Box 1450
Alexandria, VA 22313-1450
www.uspto.gov

E I DU PONT DE NEMOURS AND COMPANY
LEGAL PATENT RECORDS CENTER
BARLEY MILL PLAZA 25/1128
4417 LANCASTER PIKE
WILMINGTON, DE 19805

COPY MAILED

APR 20 2005

OFFICE OF PETITIONS

| | |
|---|---|
| In re Application of | : |
| Hari B. Sunkara et al | : |
| Application No. 10/621,892 | : DECISION ON PETITION |
| Filed: July 17, 2003 | : UNDER 37 CFR 1.313(c)(3) |
| Attorney Docket No. SO0008 US NA | : |

This is a decision on the petition, filed April 13, 2005, under 37 CFR 1.313(c)(3) to withdraw the above-identified application from issue after payment of the issue fee.

The petition is **GRANTED**.

The above-identified application is withdrawn from issue for express abandonment in favor of a continuing application. See 37 CFR 1.313(c)(3).

The application is hereby withdrawn from issue, and the abandonment is hereby recognized.

Telephone inquiries should be directed to the undersigned at (571) 272-3218.

This abandoned matter is being referred to Files Repository.

Frances Hicks
Frances Hicks
Petitions Examiner
Office of Petitions
Office of the Deputy Commissioner
for Patent Examination Policy

UNITED STATES PATENT AND TRADEMARK OFFICE

Commissioner for Patents
United States Patent and Trademark Office
P.O. Box 1450
Alexandria, VA 22313-1450
www.uspto.gov

INTERNATIONAL BUSINESS MACHINES CORPORATION
c/o HAMILTON & TERRILE, LLP
P.O. BOX 203518
AUSTIN TX 78720

COPY MAILED

JAN 0 3 2007

OFFICE OF PETITIONS

In re Application of :
Chang, et al. :
Application No. 10/621,902 :
Filed: July 17, 2003 :
Attorney Docket No. AUS920030082US1 :
For: METHOD AND SYSTEM FOR IMPLEMENTING AN APPLICATION-BASED NAMING SYSTEM

ON PETITION

This is a decision on the petition, filed November 15, 2006, under 37 CFR 1.137(b) to revive the above-identified application.

The above-identified application became abandoned for failure to timely submit a reply within three (3) months of the mailing of the January 24, 2006 non-final Office action. No response being received and no extensions of time being obtained, this application became abandoned on April 25, 2006. A Notice of Abandonment was mailed on October 27, 2006.

Applicants have submitted an amendment in reply to the January 24, 2006 non-final Office action, an acceptable statement of the unintentional nature of the delay in responding to the January 24, 2006 non-final Office action, and the petition fee.

The statement of unintentional delay was not signed by a person who would have been in a position of knowing that the delay in filing a timely response was unintentional. In the event that petitioner has no knowledge that the delay was in fact unintentional, practitioner should make a reasonable inquiry to ascertain that, in fact, the delay was unintentional. If practitioner discovers that the delay was intentional, practitioner must so notify the Office.

The petition is **GRANTED**.

After the mailing of this decision the application will be forwarded to Technology Center A.U. 2164 for consideration of the amendment filed on November 15, 2006.

Telephone inquiries should be directed to the undersigned at (571) 272-3230.

Shirene Willis Brantley

Shirene Willis Brantley
Senior Petitions Attorney
Office of Petitions
Office of the Deputy Commissioner
for Patent Examination Policy

UNITED STATES PATENT AND TRADEMARK OFFICE

Commissioner for Patents
United States Patent and Trademark Office
P.O. Box 1450
Alexandria, VA 22313-1450
www.uspto.gov

MAR 24 2005

| | | |
|---|---|---|
| In re Application of | : | |
| Wayne Vaccaro et al | : | NOTICE OF WITHDRAWAL |
| Serial No. 10/621,909 | : | FROM ISSUE |
| Filed: July 17, 2003 | : | UNDER 37 CFR 1.313(b) |
| For: MODULATORS OF THE GLUCOCORTICOID: | | |
| RECEPTOR AND METHOD | : | |

The above-identified application is withdrawn from issue after payment of the issue fee due to a mistake on the part of the Office. See 37 CFR 1.313(b).

The above-identified application is hereby withdrawn from issue.

The issue fee is refundable upon written request. If, however, the application is again found allowable, the issue fee can be applied toward payment of the issue fee in the amount identified on the new Notice of Allowance and Issue Fee Due upon written request. This request and any balance due must be received on or before the due date noted in the new Notice of Allowance in order to prevent abandonment of the application.

Telephone inquiries should be directed to Cecilia Tsang at (571) 272-0562.

The above-identified application is being forwarded to the examiner for prompt appropriate action, including notifying applicant of the new status of this application.

Bruce M. Kisliuk
Director, Technology Center 1600

STEPHEN B. DAVIS
BRISTOL-MYERS SQUIBB COMPANY
PATENT DEPARTMENT
P O BOX 4000
PRINCETON NJ 08543-4000

**SCAN!** **Please forward case and paper to address shown below.**

**SPE RESPONSE FOR CERTIFICATE OF CORRECTION**

**Paper No.:** _____

DATE : 5/23/06

TO SPE OF : ART UNIT 1625 Andrus, Janet (spe)

SUBJECT : Request for Certificate of Correction for Appl. No.: 10/621909 Patent No.: 6995181

Please respond to this request for a certificate of correction within 7 days.

Please review the requested changes/corrections as shown in the attached certificate of correction. Please complete this form (see below) and forward it with the file to:

**Certificates of Correction Branch (CofC)**
**South Tower - 9A22**
**Palm Location 7580**

**HENRY RANDALL**
**Certificates of Correction Branch**
**703-308-9390 ext.** _____

**Thank You For Your Assistance**

---

The request for issuing the above-identified correction(s) is hereby:
Note your decision on the appropriate box.

- ☒ Approved — All changes apply.
- ☐ Approved In Part — Specify below which changes do not apply.
- ☐ Denied — State the reasons for denial below.

Comments: _____

SPE

1625
Art Unit

UNITED STATES PATENT AND TRADEMARK OFFICE

Commissioner for Patents
United States Patent and Trademark Office
P.O. Box 1450
Alexandria, VA 22313-1450
www.uspto.gov

IBM CORPORATION
INTELLECTUAL PROPERTY LAW
11501 BURNET ROAD
AUSTIN TX 78758

**MAILED**

FEB 02 2010

OFFICE OF PETITIONS

| | | |
|---|---|---|
| In re Application of | : | |
| Susann Marie Keohane et al. | : | |
| Application No. 10/621,930 | : | ON PETITION |
| Filed: July 17, 2003 | : | |
| Attorney Docket No. **AUS920030357US1** | : | |

This is a decision on the petition under the unintentional provisions of 37 CFR 1.137(b), filed November 10, 2009, to revive the above-identified application.

The petition is **DISMISSED**.

Any request for reconsideration of this decision must be submitted within TWO (2) MONTHS from the mail date of this decision. Extensions of time under 37 CFR 1.136(a) are permitted. The reconsideration request should include a cover letter entitled "Renewed Petition under 37 CFR 1.137(b)." This is **not** a final agency action within the meaning of 5 U.S.C. § 704.

The application became abandoned for failure to timely reply within the meaning of 37 CFR 1.113 to the final Office action, mailed November 10, 2008, which set a shortened statutory period for reply of three (3) months. No extensions of time under the provisions of 37 CFR 1.136(a) were obtained. Accordingly, the application became abandoned on February 11, 2009.

A grantable petition under 37 CFR 1.137(b) must be accompanied by: (1) the required reply, unless previously filed; (2) the petition fee as set forth in 37 CFR 1.17(m); (3) a statement that the entire delay in filing the required reply from the due date for the reply until the filing of a grantable petition pursuant to 37 CFR 1.137(b) was unintentional; and (4) any terminal disclaimer (and fee as set forth in 37 CFR 1.20(d)) required by 37 CFR 1.137(d). Where there is a question as to whether either the abandonment or the delay in filing a petition under 37 CFR 1.137 was unintentional, the Director may require additional information. See MPEP 711.03(c)(II)(C) and (D). The instant petition lacks item(s) (1).

The proposed reply required for consideration of a petition to revive must be either a Notice of Appeal (and appeal fee required by 37 CFR 41.20(b)(2)), an amendment that *prima facie* places the application in condition for allowance, a Request for Continued Examination (RCE) and submission (37 CFR 1.114), or the filing of a continuing application under 37 CFR 1.53(b). *See* MPEP 711.03(c)(III)(A)(2). Since the amendment submitted on May 28, 2009, does not *prima facie* place the application in condition for allowance, the reply required must be a Notice of Appeal (and appeal fee), RCE, or the filing of a continuing application under 37 CFR 1.53(b). A copy of the Advisory Action explaining why the amendment was not accepted is enclosed with this decision.

Further correspondence with respect to this matter should be addressed as follows:

By Mail: Mail Stop PETITION
Commissioner for Patents
P. O. Box 1450
Alexandria, VA 22313-1450

By hand: U. S. Patent and Trademark Office
Customer Service Window, Mail Stop Petitions
Randolph Building
401 Dulany Street
Alexandria, VA 22314

The centralized facsimile number is **(571) 273-8300.**

Telephone inquiries concerning this decision should be directed to JoAnne Burke at (571) 272-4584.

JoAnne Burke
Petitions Examiner
Office of Petitions

Enclosed: Copy of Advisory Action

| Advisory Action Before the Filing of an Appeal Brief | Application No. | Applicant(s) | |
|---|---|---|---|
| | 10/621,930 | KEOHANE ET AL. | |
| | Examiner | Art Unit | |
| | TAUQIR HUSSAIN | 2452 | |

***--The MAILING DATE of this communication appears on the cover sheet with the correspondence address --***

THE REPLY FILED 10 November 2009 FAILS TO PLACE THIS APPLICATION IN CONDITION FOR ALLOWANCE.

1. ☒ The reply was filed after a final rejection, but prior to or on the same day as filing a Notice of Appeal. To avoid abandonment of this application, applicant must timely file one of the following replies: (1) an amendment, affidavit, or other evidence, which places the application in condition for allowance; (2) a Notice of Appeal (with appeal fee) in compliance with 37 CFR 41.31; or (3) a Request for Continued Examination (RCE) in compliance with 37 CFR 1.114. The reply must be filed within one of the following time periods:
   a) ☐ The period for reply expires _____months from the mailing date of the final rejection.
   b) ☒ The period for reply expires on: (1) the mailing date of this Advisory Action, or (2) the date set forth in the final rejection, whichever is later. In no event, however, will the statutory period for reply expire later than SIX MONTHS from the mailing date of the final rejection.
   Examiner Note: If box 1 is checked, check either box (a) or (b). ONLY CHECK BOX (b) WHEN THE FIRST REPLY WAS FILED WITHIN TWO MONTHS OF THE FINAL REJECTION. See MPEP 706.07(f).

Extensions of time may be obtained under 37 CFR 1.136(a). The date on which the petition under 37 CFR 1.136(a) and the appropriate extension fee have been filed is the date for purposes of determining the period of extension and the corresponding amount of the fee. The appropriate extension fee under 37 CFR 1.17(a) is calculated from: (1) the expiration date of the shortened statutory period for reply originally set in the final Office action; or (2) as set forth in (b) above, if checked. Any reply received by the Office later than three months after the mailing date of the final rejection, even if timely filed, may reduce any earned patent term adjustment. See 37 CFR 1.704(b).

NOTICE OF APPEAL

2. ☐ The Notice of Appeal was filed on _____. A brief in compliance with 37 CFR 41.37 must be filed within two months of the date of filing the Notice of Appeal (37 CFR 41.37(a)), or any extension thereof (37 CFR 41.37(e)), to avoid dismissal of the appeal. Since a Notice of Appeal has been filed, any reply must be filed within the time period set forth in 37 CFR 41.37(a).

AMENDMENTS

3. ☐ The proposed amendment(s) filed after a final rejection, but prior to the date of filing a brief, will not be entered because
   (a) ☐ They raise new issues that would require further consideration and/or search (see NOTE below);
   (b) ☐ They raise the issue of new matter (see NOTE below);
   (c) ☐ They are not deemed to place the application in better form for appeal by materially reducing or simplifying the issues for appeal; and/or
   (d) ☐ They present additional claims without canceling a corresponding number of finally rejected claims.
   NOTE: _____. (See 37 CFR 1.116 and 41.33(a)).
4. ☐ The amendments are not in compliance with 37 CFR 1.121. See attached Notice of Non-Compliant Amendment (PTOL-324).
5. ☐ Applicant's reply has overcome the following rejection(s): _____.
6. ☐ Newly proposed or amended claim(s) _____ would be allowable if submitted in a separate, timely filed amendment canceling the non-allowable claim(s).
7. ☒ For purposes of appeal, the proposed amendment(s): a) ☒ will not be entered, or b) ☐ will be entered and an explanation of how the new or amended claims would be rejected is provided below or appended.
   The status of the claim(s) is (or will be) as follows:
   Claim(s) allowed: _____.
   Claim(s) objected to: _____.
   Claim(s) rejected: *3,10 and 17*.
   Claim(s) withdrawn from consideration: _____.

AFFIDAVIT OR OTHER EVIDENCE

8. ☐ The affidavit or other evidence filed after a final action, but before or on the date of filing a Notice of Appeal will not be entered because applicant failed to provide a showing of good and sufficient reasons why the affidavit or other evidence is necessary and was not earlier presented. See 37 CFR 1.116(e).
9. ☐ The affidavit or other evidence filed after the date of filing a Notice of Appeal, but prior to the date of filing a brief, will not be entered because the affidavit or other evidence failed to overcome all rejections under appeal and/or appellant fails to provide a showing a good and sufficient reasons why it is necessary and was not earlier presented. See 37 CFR 41.33(d)(1).
10. ☐ The affidavit or other evidence is entered. An explanation of the status of the claims after entry is below or attached.

REQUEST FOR RECONSIDERATION/OTHER

11. ☒ The request for reconsideration has been considered but does NOT place the application in condition for allowance because: See Continuation Sheet.
12. ☐ Note the attached Information *Disclosure Statement*(s). (PTO/SB/08) Paper No(s). _____
13. ☐ Other: _____.

Continuation of 11. does NOT place the application in condition for allowance because: Current amendments filed on 11/10/2009 will not put the application in condition for allowance. At best Examiner will issue a supplementary office action to overcome the amendments and arguments..

UNITED STATES PATENT AND TRADEMARK OFFICE

Commissioner for Patents
United States Patent and Trademark Office
P.O. Box 1450
Alexandria, VA 22313-1450
www.uspto.gov

IBM CORP (YA)
C/O YEE & ASSOCIATES PC
PO BOX 802333
DALLAS TX 75380

**COPY MAILED**

DEC 15 2006

**OFFICE OF PETITIONS**

| | | |
|---|---|---|
| In re Application of | : | |
| Dierks, et al. | : | |
| Application No. 10/621,931 | : | ON PETITION |
| Filed: July 17, 2003 | : | |
| Attorney Docket No. AUS920030471US1 | : | |

This is a decision on the petition to withdraw the holding of abandonment under 37 CFR 1.181, filed August 31, 2006.

The petition under 37 CFR 1.181 is **GRANTED**.

The holding of abandonment is **WITHDRAWN**.

The above-identified application was held abandoned for failure to timely pay the issue fee in response to the Notice of Allowance mailed December 15, 2005. This Office action set a statutory period for reply of three (3) months. No issue fee having been received, the application became abandoned on March 16, 2006. The mailing of this decision precedes the mailing of a Notice of Abandonment.

A review of the file reveals that the Notice of Allowance, for reasons not apparent, was returned to the Office as undeliverable on December 27, 2005. The Notice of Allowance was addressed to the proper address of record.

The matter is being forwarded to Group Art Unit 2186 for re-mailing of the December 15, 2005 Notice of Allowance, setting a new period for reply.

Telephone inquiries related to this decision should be directed to the undersigned at (571)272-3207.

Cliff Congo
Petitions Attorney
Office of Petitions

UNITED STATES PATENT AND TRADEMARK OFFICE

Commissioner for Patents
United States Patent and Trademark Office
P.O. Box 1450
Alexandria, VA 22313-1450
www.uspto.gov
DIW 04-05

ROBERT OSANN, JR.
10494 ANN ARBOR AVE.
CUPERTINO CA 95014

**COPY MAILED**

APR 0 8 2005

**OFFICE OF PETITIONS**

| | | |
|---|---|---|
| In re Application of | : | |
| Robert Osann | : | |
| Application No. 10/621,957 | : | ON PETITION |
| Filed: 16 July, 2003 | : | |
| For: REPROGRAMMABLE INSTRUCTION DSP | : | |

This is a decision on the petition under 1.137(b),[1] filed on 1 November, 2004, to revive the above-identified application. The petition is **GRANTED**.

This application became abandoned on 18 December, 2003, for failure to timely reply to the Notice to File Corrected Application Papers mailed on 17 October, 2003, which set a two

---

[1]Effective December 1, 1997, the provisions of 37 CFR 1.137(b) now provide that where the delay in reply was unintentional, a petition may be filed to revive an abandoned application or a lapsed patent pursuant to 37 CFR 1.137(b). A grantable petition filed under the provisions of 37 CFR 1.137(b) must be accompanied by:

(1) the required reply, unless previously filed. In a nonprovisional application abandoned for failure to prosecute, the required reply may be met by the filing of a continuing application. In a nonprovisional application filed on or after June 8, 1995, and abandoned for failure to prosecute, the required reply may also be met by the filing of a request for continued examination in compliance with § 1.114. In an application or patent, abandoned or lapsed for failure to pay the issue fee or any portion thereof, the required reply must be the payment of the issue fee or any outstanding balance thereof. In an application abandoned for failure to pay the publication fee, the required reply must include payment of the publication fee.

(2) the petition fee as set forth in 37 CFR 1.17(m);

(3) a statement that the entire delay in filing the required reply from the due date for the reply until the filing of a grantable petition pursuant to 37 CFR 1.137(b) was unintentional. The Commissioner may required additional information where there is a question whether the delay was unintentional; and

(4) any terminal disclaimer (and fee as set forth in 37 CFR 1.20(d)) required pursuant to 37 CFR 1.137(c)).

(2) month shortened period for reply. No extensions of time under 37 CFR 1.136(a) were obtained. Notice of Abandonment was mailed on 21 October, 2004.

Petitioner has submitted replacement claim pages as the required reply.

The application file is being referred to the Office of Initial Patent Examination for further processing.

Telephone inquiries concerning this matter may be directed to the undersigned at (571)272-3231.

Douglas I. Wood
Senior Petitions Attorney
Office of Petitions

UNITED STATES PATENT AND TRADEMARK OFFICE

COMMISSIONER FOR PATENTS
UNITED STATES PATENT AND TRADEMARK OFFICE
P.O. BOX 1450
ALEXANDRIA, VA 22313-1450
WWW.USPTO.GOV

Paper No. None

PRO-TECTOR INTERNATIONAL SERVICES
20775 NORADA CT.
SARATOGA CA 95070

COPY MAILED

APR 21 2006

OFFICE OF PETITIONS

In re Application of :
Chung Hsien Hsin :
Application No. 10/621,963 :
Filed: July 16, 2003 :
Attorney Docket Number: 2011123 :
Title: IMAGE SENSOR AND METHOD :
FOR MANUFACTURING THE SAME :

DECISION ON PETITION
UNDER 37 C.F.R. §1.181(A)

This is a decision on the petition under 37 C.F.R. §1.181(a) to withdraw the holding of abandonment, filed on January 17, 2006.

## BACKGROUND

The above-identified application became abandoned for failure to reply within the meaning of 37 CFR §1.113 in a timely manner to the final Office action mailed May 11, 2005, which set a shortened statutory period for reply of three (3) months. On August 2, 2005, Petitioner attempted to submit a terminal disclaimer, but this submission was not accepted by the Examiner, as the attorney was not of record. Consequently, an advisory action was mailed on August 15, 2005. No further submissions were received, and no extensions of time under the provisions of 37 CFR §1.136(a) were obtained. Accordingly, the above-identified application became abandoned on August 12, 2005.

With the present petition, Petitioner has submitted a Power of Attorney, which has been entered and made of record.

## RELEVANT PORTIONS OF THE C.F.R. and MPEP

37 C.F.R. §1.34 sets forth:

> When a registered patent attorney or patent agent acting in a representative capacity appears in person or signs a paper in practice before the United States Patent and Trademark Office in a patent case, his or her personal appearance or signature shall constitute a representation to the United States Patent and Trademark Office that under the provisions of this subchapter and the law, he or she is authorized to represent the particular party in whose behalf he or she acts. In filing such a paper, the registered patent attorney or patent agent must specify his or her registration number and name with his or her signature. Further proof of authority to act in a representative capacity may be required.<

MPEP §402 states, in part:

> Power of Attorney; Acting in a Representative Capacity
>
> In accordance with 37 CFR 1.34, a paper filed by a registered patent attorney or agent in an application in which he or she is not of record must include his or her name and registration number with his or her signature. Acceptance of papers filed in patent applications and reexamination proceedings by registered attorneys and agents upon a representation that the attorney or agent is authorized to act in a representative capacity is for the purpose of facilitating replies on behalf of applicants in patent applications (emphasis added) and, further, to obviate the need for filing powers of attorney in individual applications or patents when there has been a change in composition of law firms or corporate patent staffs. Interviews with a registered attorney or agent not of record will, in view of 35 U.S.C. 122, be conducted only on the basis of information and files supplied by the attorney or agent. A person acting in a representative capacity may not sign (emphasis added) (A) a power of attorney 37 CFR 1.32(b)(4)), (B) a document granting access to an application (except where an executed oath or declaration has not been filed, and the patent practitioner was named in the papers accompanying the application papers - 37 CFR 1.14(c)), (C) a change of correspondence address (except where an executed oath or declaration has not been filed, and the patent practitioner filed the application - 37 CFR 1.33(a)), (D) a terminal disclaimer (emphasis added) ( 37 CFR 1.321(b)(1)(iv)), or (E) a request for an express abandonment without filing a continuing application (37 CFR 1.138(b)).

## ANALYSIS

The showing in the present petition is not sufficient to withdraw the holding of abandonment.

Petitioner both submitted and signed the terminal disclaimer, and this same attorney represented that he was acting in a representative capacity. As set forth in the portion of the MPEP reproduced above, a person acting in a representative capacity may not sign a terminal disclaimer. Therefore the terminal disclaimer could not have been entered, and the Examiner properly refused to enter the same.

With this petition, Petitioner has requested that the holding of abandonment be withdrawn, but has not proffered any reason why this request should be granted. As the decision not to enter the terminal disclaimer was the correct course of action, this request cannot be entertained.

Therefore, the petition under 37 C.F.R. §1.181 must be **DISMISSED**.

## CONCLUSION

Any reply must be submitted within **TWO (2) MONTHS** from the mail date of this decision. Extensions of time under 37 C.F.R. §1.136(a) are permitted. The reply should include a cover letter entitled "Renewed Petition Under 37 C.F.R. §1.181." This is not a final agency action within the meaning of 5 U.S.C 704.

Alternatively, Petitioner may wish to consider filing a petition under 37 C.F.R. §§1.137(a) and/or (b).

Any subsequent petition should indicate in a prominent manner that the attorney handling this matter is Paul Shanoski, and may be submitted by mail[1], hand-delivery[2], or facsimile[3].

Telephone inquiries regarding *this decision* should be directed to the undersigned at (571) 272-3225. All other inquiries concerning examination procedures or status of the application should be directed to the Technology Center.

Paul Shanoski

**Paul Shanoski**
**Senior Attorney**
**Office of Petitions**
**United States Patent and Trademark Office**

---

1 Mail Stop Petition, Commissioner for Patents, United States Patent and Trademark Office, P.O. Box 1450, Alexandria, VA, 22313-1450.
2 Customer Window, Randolph Building, 401 Dulaney Street, Alexandria, VA, 22314.
3 (571) 273-8300- please note this is a central facsimile number.

UNITED STATES PATENT AND TRADEMARK OFFICE

COMMISSIONER FOR PATENTS
UNITED STATES PATENT AND TRADEMARK OFFICE
P.O. BOX 1450
ALEXANDRIA, VA 22313-1450
WWW.USPTO.GOV

Paper No. None

PRO-TECTOR INTERNATIONAL SERVICES
20775 NORADA CT.
SARATOGA CA 95070

COPY MAILED
FEB 16 2007
OFFICE OF PETITIONS

| | | |
|---|---|---|
| In re Application of | : | |
| Chung Hsien Hsin | : | DECISION ON PETITION |
| Application No. 10/621,963 | : | UNDER 37 C.F.R. §1.137(B) |
| Filed: July 16, 2003 | : | |
| Attorney Docket Number: 2011123 | : | |
| Title: IMAGE SENSOR AND METHOD | : | |
| FOR MANUFACTURING THE SAME | : | |

This is a decision on the petition filed June 26, 2006, pursuant to 37 C.F.R. §1.137(b)[1], to revive the above-identified application.

The Office regrets the period of delay in issuing this decision.

The above-identified application became abandoned for failure to reply within the meaning of 37 CFR §1.113 in a timely manner to the final Office action mailed May 11, 2005, which set a shortened statutory period for reply of three months. On August

1 A grantable petition pursuant to 37 C.F.R. §1.137(b) must be accompanied by:

(1) The reply required to the outstanding Office action or notice, unless previously filed;
(2) The petition fee as set forth in § 1.17(m);
(3) A statement that the entire delay in filing the required reply from the due date for the reply until the filing of a grantable petition pursuant to this paragraph was unintentional. The Commissioner may require additional information where there is a question whether the delay was unintentional, and;
(4) Any terminal disclaimer (and fee as set forth in § 1.20(d)) required pursuant to paragraph (d) of this section.

2, 2005, Petitioner's representative attempted to submit a terminal disclaimer, but this submission was not accepted by the Examiner, as the attorney was not of record. Consequently, an advisory action was mailed on August 15, 2005. No further submissions were received, and no extensions of time under the provisions of 37 CFR §1.136(a) were obtained. Accordingly, the above-identified application became abandoned on August 12, 2005.

On January 17, 2006, a petition pursuant to 37 C.F.R. §1.181(a) was submitted, along with a Power of Attorney. The petition was dismissed via the mailing of a decision on April 21, 2006.

With the present petition, Petitioner's representative has met the first requirement of Rule §1.137(b). The fourth requirement is not applicable.

Regarding the second requirement of Rule §1.137(b), the terminal disclaimer which Petitioner's representative submitted on August 2, 2005 cannot be accepted. The terminal disclaimer names specific claims, and it fails to contain a reel and frame number (it does not appear that Petitioner's representative has filed a statement pursuant to Rule §3.73(b)).

Regarding the third requirement of Rule §1.137(b), Petitioner's representative has failed to include a statement that the entire delay in filing the required reply from the due date for the reply until the filing of a grantable petition pursuant to 37 C.F.R. §1.137(b) was unintentional.

It follows that this petition must be **DISMISSED**.

Any reply must be submitted within **TWO MONTHS** from the mail date of this decision. Extensions of time under 37 C.F.R. §1.136(a) are permitted. The reply should include a cover letter entitled "Renewed Petition Under 37 C.F.R. 1.137(b)". This is not a final agency action within the meaning of 5 U.S.C 704.

The renewed petition should indicate in a prominent manner that the attorney handling this matter is Paul Shanoski, and may be submitted by mail[2], hand-delivery[3], or facsimile[4].

If responding by mail, Petitioner's representative is advised <u>not</u> to place the undersigned's name on the envelope. Only the information that appears in the footnote should be included -

---

2 Mail Stop Petition, Commissioner for Patents, United States Patent and Trademark Office, P.O. Box 1450, Alexandria, VA, 22313-1450.
3 Customer Window, Randolph Building, 401 Dulaney Street, Alexandria, VA, 22314.
4 (571) 273-8300- please note this is a central facsimile number.

adding anything else to the address will delay the delivery of the response to the undersigned.

Telephone inquiries regarding *this decision* should be directed to the undersigned at (571) 272-3225[5]. All other inquiries concerning examination procedures or status of the application should be directed to the Technology Center.

**Paul Shanoski**
**Senior Attorney**
**Office of Petitions**
**United States Patent and Trademark Office**

5 Petitioner's representative will note that all practice before the Office should be in writing, and the action of the Office will be based exclusively on the written record in the Office. See 37 C.F.R. §1.2. As such, Petitioner's representative is reminded that no telephone discussion may be controlling or considered authority for any further action(s) of Petitioner's representative.

UNITED STATES PATENT AND TRADEMARK OFFICE

COMMISSIONER FOR PATENTS
UNITED STATES PATENT AND TRADEMARK OFFICE
P.O. BOX 1450
ALEXANDRIA, VA 22313-1450
WWW.USPTO.GOV

Paper No. None

PRO-TECTOR INTERNATIONAL SERVICES
20775 NORADA CT.
SARATOGA CA 95070

COPY MAILED

SEP 12 2007

OFFICE OF PETITIONS

In re Application of :
Chung Hsien Hsin :
Application No. 10/621,963 :
Filed: July 16, 2003 :
Attorney Docket Number: 2011123 :
Title: IMAGE SENSOR AND METHOD :
FOR MANUFACTURING THE SAME :

DECISION ON RENEWED PETITION
PURSUANT TO
37 C.F.R. § 1.137(B)

This is a decision on the renewed petition filed April 16, 2007, pursuant to 37 C.F.R. § 1.137(b)[1], to revive the above-identified application.

The above-identified application became abandoned for failure to reply within the meaning of 37 C.F.R. § 1.113 in a timely manner to the final Office action mailed May 11, 2005, which set a shortened statutory period for reply of three months. On August 2, 2005, Petitioner attempted to submit a terminal disclaimer,

1 A grantable petition pursuant to 37 C.F.R. § 1.137(b) must be accompanied by:

(1) The reply required to the outstanding Office action or notice, unless previously filed;
(2) The petition fee as set forth in § 1.17(m);
(3) A statement that the entire delay in filing the required reply from the due date for the reply until the filing of a grantable petition pursuant to this paragraph was unintentional. The Commissioner may require additional information where there is a question whether the delay was unintentional, and;
(4) Any terminal disclaimer (and fee as set forth in § 1.20(d)) required pursuant to paragraph (d) of this section.

but this submission was not accepted by the Examiner, as the attorney was not of record. Consequently, an advisory action was mailed on August 15, 2005. No further submissions were received, and no extensions of time under the provisions of 37 C.F.R. § 1.136(a) were obtained. Accordingly, the above-identified application became abandoned on August 12, 2005.

On January 17, 2006, a petition pursuant to 37 C.F.R. § 1.181(a) was submitted, along with a Power of Attorney. The petition was dismissed via the mailing of a decision on April 21, 2006.

An original petition pursuant to 37 C.F.R. § 1.137(b) was filed on June 26, 2006, and was dismissed via the mailing of a decision on February 16, 2007.

**It is noted that this renewed petition has not been executed.**

37 C.F.R. § 10.18(a) sets forth, *in toto*:

> For all documents filed in the Office in patent, trademark, and other non-patent matters, except for correspondence that is required to be signed by the applicant or party, each piece of correspondence filed by a practitioner in the Patent and Trademark Office must bear a signature, personally signed by such practitioner, in compliance with § 1.4(d)(1) of this chapter.

Since **this renewed petition has been submitted without a signature**, the petition cannot be processed.

For this reason, this renewed petition under 37 C.F.R. § 1.137(b) must be **DISMISSED**.

Any reply must be submitted within **TWO MONTHS** from the mail date of this decision. Extensions of time under 37 C.F.R. §1.136(a) are permitted. The reply should include a cover letter entitled "Second Renewed Petition Under 37 C.F.R. § 1.137(b)." This is not a final agency action within the meaning of 5 U.S.C § 704.

The renewed petition should indicate in a prominent manner that the attorney handling this matter is Paul Shanoski, and may be submitted by mail[2], hand-delivery[3], or facsimile[4]. Registered users of EFS-Web may alternatively submit a response to this decision via EFS-Web[5].

---

2 Mail Stop Petition, Commissioner for Patents, United States Patent and Trademark Office, P.O. Box 1450, Alexandria, VA, 22313-1450.
3 Customer Window, Randolph Building, 401 Dulaney Street, Alexandria, VA, 22314.
4 (571) 273-8300- please note this is a central facsimile number.
5 https://sportal.uspto.gov/authenticate/authenticateuserlocalepf.html

If responding by mail, Petitioner is advised not to place the undersigned's name on the envelope. Only the information that appears in the footnote should be included - adding anything else to the address will delay the delivery of the response to the undersigned.

Telephone inquiries **regarding this decision** should be directed to the undersigned at (571) 272-3225[6]. All other inquiries concerning examination procedures or status of the application should be directed to the Technology Center.

Paul Shanoski

Paul Shanoski
Senior Attorney
Office of Petitions
United States Patent and Trademark Office

6 Petitioner will note that all practice before the Office should be in writing, and the action of the Office will be based exclusively on the written record in the Office. See 37 C.F.R. § 1.2. As such, Petitioner is reminded that no telephone discussion may be controlling or considered authority for any further action(s) of Petitioner.

UNITED STATES PATENT AND TRADEMARK OFFICE

Commissioner for Patents
United States Patent and Trademark Office
P.O. Box 1450
Alexandria, VA 22313-1450
www.uspto.gov

Paper No.

PRO-TECTOR INTERNATIONAL SERVICES
20775 NORADA CT.
SARATOGA CA 95070

**COPY MAILED**

MAR 2 4 2008

**OFFICE OF PETITIONS**

In re Application of :
Chung Hsien Hsin :
Application No. 10/621,963 :
Filed: July 16, 2003 :
Attorney Docket Number: 2011123 :
Title: IMAGE SENSOR AND METHOD :
FOR MANUFACTURING THE SAME :

DECISION ON SECOND RENEWED PETITION PURSUANT TO 37 C.F.R. § 1.137(B)

This is a decision on the second renewed petition filed February 7, 2008, pursuant to 37 C.F.R. § 1.137(b)[1], to revive the above-identified application.

This second renewed petition is **GRANTED.**

The above-identified application became abandoned for failure to reply within the meaning of 37 C.F.R. § 1.113 in a timely manner to the final Office action mailed May 11, 2005, which set a shortened statutory period for reply of three months. On August 2, 2005, Petitioner attempted to submit a terminal disclaimer, but the Examiner did not accept this submission, as the attorney was not of record. Consequently, an advisory action was mailed

---

1 A grantable petition pursuant to 37 C.F.R. § 1.137(b) must be accompanied by:

(1) The reply required to the outstanding Office action or notice, unless previously filed;
(2) The petition fee as set forth in § 1.17(m);
(3) A statement that the entire delay in filing the required reply from the due date for the reply until the filing of a grantable petition pursuant to this paragraph was unintentional. The Commissioner may require additional information where there is a question whether the delay was unintentional, and;
(4) Any terminal disclaimer (and fee as set forth in § 1.20(d)) required pursuant to paragraph (d) of this section.

on August 15, 2005. No further submissions were received, and no extensions of time under the provisions of 37 C.F.R. § 1.136(a) were obtained. Accordingly, the above-identified application became abandoned on August 12, 2005.

On January 17, 2006, a petition pursuant to 37 C.F.R. § 1.181(a) was submitted, along with a Power of Attorney. The petition was dismissed via the mailing of a decision on April 21, 2006.

An original petition pursuant to 37 C.F.R. § 1.137(b) was filed on June 26, 2006, along with the required petition fee, and this submission was dismissed via the mailing of a decision on February 16, 2007.

A renewed petition pursuant to 37 C.F.R. § 1.137(b) was filed on April 16, 2007, and was dismissed via the mailing of a decision on September 12, 2007.

With this second renewed petition, Petitioner has submitted a three-month extension of time to make timely this response, along with the proper statement of unintentional delay.

The Examiner has reviewed the terminal disclaimer that was submitted on April 16, 2007.

Petitioner has met requirements (1) - (3) of Rule § 1.137(b). The fourth requirement is not applicable.

The Technology Center will be notified of this decision. The Technology Center's support staff will notify the Examiner of this decision, so that the terminal disclaimer that was filed on April 16, 2007 can receive further processing in due course.

Telephone inquiries regarding *this decision* should be directed to the undersigned at (571) 272-3225[2]. All other inquiries concerning examination procedures or status of the application should be directed to the Technology Center.

/Paul Shanoski/
Paul Shanoski
Senior Attorney
Office of Petitions

---

2 Petitioner will note that all practice before the Office should be in writing, and the action of the Office will be based exclusively on the written record in the Office. See 37 C.F.R. § 1.2. As such, Petitioner is reminded that no telephone discussion may be controlling or considered authority for any further action(s) of Petitioner.

UNITED STATES PATENT AND TRADEMARK OFFICE

Commissioner for Patents
United States Patent and Trademark Office
P.O. Box 1450
Alexandria, VA 22313-1450
www.uspto.gov

COPY MAILED
NOV 01 2006
OFFICE OF PETITIONS

NYDEGGER & ASSOCIATES
348 OLIVE STREET
SAN DIEGO CA 92103

| | | |
|---|---|---|
| In re Application of | : | |
| Don Millerd | : | |
| Application No. 10/621,973 | : | DECISION ON PETITION |
| Filed: July 17, 2003 | : | TO WITHDRAW |
| Attorney Docket No. 11371.9 | : | FROM RECORD |
| | : | |

This is a decision on the Request to Withdraw as attorney or agent of record under 37 C.F.R. § 1.36(b), filed March 10, 2006.

The request is **NOT APPROVED**.

A grantable request to withdraw as attorney/agent of record must be signed by every attorney/agent seeking to withdraw or contain a clear indication that one attorney is signing on behalf of another/others. A request to withdraw will not be approved unless at least 30 (thirty) days would remain between the date of approval and the later of the expiration date of a time to file a response or the expiration date of the maximum time period which can be extended under 37 C.F.R. § 1.136(a).

The request cannot be approved because there remain less than 30 (thirty days) between the date of this decision and the maximum extendable time period for filing a response to the Office action mailed on May 4, 2006.

All future communications from the Office will continue to be directed to the above-listed address until otherwise notified by applicant.

Telephone inquiries concerning this decision should be directed to Terri Williams at 571-272- 2991.

Terri Williams for

Amelia Au
Petitions Examiner
Office of Petitions

cc: **Mr. Walter W. Weller, III**
Vacumate, LLC
201 W. Short St. #820
Lexington, KY 40507

UNITED STATES PATENT AND TRADEMARK OFFICE

COMMISSIONER FOR PATENTS
UNITED STATES PATENT AND TRADEMARK OFFICE
P.O. BOX 1450
ALEXANDRIA, VA 22313-1450
www.uspto.gov
DIW Aug-07

NYDEGGER & ASSOCIATES
348 OLIVE STREET
SAN DIEGO CA 92103

**COPY MAILED**

AUG 10 2007

**OFFICE OF PETITIONS**

| | | |
|---|---|---|
| In re Application of | : | |
| Don Millerd | : | |
| Application No. 10/621973 | : | ON PETITION |
| Filing Date: 07/17/2003 | : | |
| Atty Docket No. 11371.9 | : | |

This is a decision on the petition under 37 CFR 1.137(b),[1] filed on 25 May, 2007, to revive the above-identified application.

The petition is **DISMISSED**.

Any request for reconsideration of this decision must be submitted within TWO (2) MONTHS from the mail date of this decision. Extensions of time under 37 CFR 1.136(a) are permitted. The reconsideration request should include a cover

---

[1] Effective December 1, 1997, the provisions of 37 CFR 1.137(b) now provide that where the delay in reply was unintentional, a petition may be filed to revive an abandoned application or a lapsed patent pursuant to 37 CFR 1.137(b). A grantable petition filed under the provisions of 37 CFR 1.137(b) must be accompanied by:

(1) the required reply, unless previously filed. In a nonprovisional application abandoned for failure to prosecute, the required reply may be met by the filing of a continuing application. In a nonprovisional application filed on or after June 8, 1995, and abandoned for failure to prosecute, the required reply may also be met by the filing of a request for continued examination in compliance with § 1.114. In an application or patent, abandoned or lapsed for failure to pay the issue fee or any portion thereof, the required reply must be the payment of the issue fee or any outstanding balance thereof. In an application abandoned for failure to pay the publication fee, the required reply must include payment of the publication fee.

(2) the petition fee as set forth in 37 CFR 1.17(m);

(3) a statement that the entire delay in filing the required reply from the due date for the reply until the filing of a grantable petition pursuant to 37 CFR 1.137(b) was unintentional. The Commissioner may required additional information where there is a question whether the delay was unintentional; and

(4) any terminal disclaimer (and fee as set forth in 37 CFR 1.20(d)) required pursuant to 37 CFR 1.137(c)).

letter entitled "Renewed Petition under 37 CFR 1.137(b)." This is not a final agency decision.

This application became abandoned on 5 August, 2006, for failure to timely respond to the non-final Office action mailed on 4 May, 2006, which set a three (3) month shortened statutory period for reply. No extensions of time under 37 CFR 1.136(a) were obtained. Notice of Abandonment was mailed on 14 December, 2006.

The petition lacks the required reply. Although petitioners submitted a paper styled as an amendment as the required reply, that amendment is not signed. 37 CFR 1.33(b) states that papers filed in an application, except for written assertions pursuant to § 1.27(c)(2)(ii) of this part, must be signed by: (1) A patent practitioner of record appointed in compliance with § 1.32(b); (2) A patent practitioner not of record who acts in a representative capacity under the provisions of § 1.34; (3) An assignee as provided for under § 3.71(b) of this chapter; or (4) All of the applicants (§ 1.41(b)) for patent, unless there is an assignee of the entire interest and such assignee has taken action in the application in accordance with § 3.71 of this chapter.

The petition is therefore dismissed without prejudice to reconsideration pending receipt of a properly signed reply.

There is no indication that petitioner herein was ever empowered to prosecute the instant application. If petitioner desires to receive future correspondence regarding this application, the appropriate power of attorney documentation must be mailed. A courtesy copy of this decision will be mailed to petitioner. However, all future correspondence will be directed to the address of record until such time as appropriate instructions are received to the contrary.

Further correspondence with respect to this matter should be addressed as follows:

By mail: Mail Stop PETITIONS
Commissioner for Patents
Post Office Box 1450
Alexandria, VA 22313-1450

By hand: Customer Service Window
Mail Stop Petitions
Randolph Building
401 Dulany Street
Alexandria, VA 22314

By fax: (571) 273-8300
ATTN: Office of Petitions

Telephone inquiries concerning this matter may be directed to the undersigned at (571)272-3231.

D Wood

Douglas I. Wood
Senior Petitions Attorney
Office of Petitions

Cc:

VANCE V. VANDRAKE, III
FROST BROWN TODD LLC
2200 PNC CENTER
201 EAST FIFTH STREET
CINCINNATI OH 45202

UNITED STATES PATENT AND TRADEMARK OFFICE

COMMISSIONER FOR PATENTS
UNITED STATES PATENT AND TRADEMARK OFFICE
P.O. BOX 1450
ALEXANDRIA, VA 22313-1450
www.uspto.gov
DIW Oct-07

FROST BROWN TODD, LLC
2200 PNC CENTER
201 E. FIFTH STREET
CINCINNATI OH 45202

COPY MAILED

OCT 16 2007

OFFICE OF PETITIONS

| | | |
|---|---|---|
| In re Application of | : | |
| Don Millerd | : | |
| Application No. 10/621973 | : | ON PETITION |
| Filing Date: 07/17/2003 | : | |
| Atty Docket No. 11371.9 | : | |

This is a decision on the renewed petition under 37 CFR 1.137(b),[1] filed on 12 September, 2007, to revive the above-identified application.

The petition is **GRANTED**.

This application became abandoned on 5 August, 2006, for failure to timely respond to the non-final Office action mailed on 4 May, 2006, which set a three (3) month shortened statutory period for

---

[1] Effective December 1, 1997, the provisions of 37 CFR 1.137(b) now provide that where the delay in reply was unintentional, a petition may be filed to revive an abandoned application or a lapsed patent pursuant to 37 CFR 1.137(b). A grantable petition filed under the provisions of 37 CFR 1.137(b) must be accompanied by:

(1) the required reply, unless previously filed. In a nonprovisional application abandoned for failure to prosecute, the required reply may be met by the filing of a continuing application. In a nonprovisional application filed on or after June 8, 1995, and abandoned for failure to prosecute, the required reply may also be met by the filing of a request for continued examination in compliance with § 1.114. In an application or patent, abandoned or lapsed for failure to pay the issue fee or any portion thereof, the required reply must be the payment of the issue fee or any outstanding balance thereof. In an application abandoned for failure to pay the publication fee, the required reply must include payment of the publication fee.

(2) the petition fee as set forth in 37 CFR 1.17(m);

(3) a statement that the entire delay in filing the required reply from the due date for the reply until the filing of a grantable petition pursuant to 37 CFR 1.137(b) was unintentional. The Commissioner may required additional information where there is a question whether the delay was unintentional; and

(4) any terminal disclaimer (and fee as set forth in 37 CFR 1.20(d)) required pursuant to 37 CFR 1.137(c)).

reply. No extensions of time under 37 CFR 1.136(a) were obtained. Notice of Abandonment was mailed on 14 December, 2006. The petition filed on 25 May, 2007, was dismissed on 10 August, 2007.

Petitioner has filed an amendment in response to the non-final Office action mailed on 4 May, 2006.

Receipt of the revocation and power of attorney filed on 12 September, 2007, is acknowledged.

The application is referred to Technology Center Art Unit 3767 for further processing.

Telephone inquiries concerning this matter may be directed to the undersigned at (571)272-3231.

D Wood

Douglas I. Wood
Senior Petitions Attorney
Office of Petitions

UNITED STATES
PATENT AND
TRADEMARK OFFICE

Commissioner for Patents
Washington, DC 20231
www.uspto.gov

10/17/03

Weingarten Schurgin Gagnebin and Lebovici LLP
Ten Post Office Square
Boston MA 02109

Dear Applicant:

The Box PGPub replacement drawings for application number 10/622,013 received on 8/20/03 by the U. S. Patent and Trademark Office will be included for patent publication.

Telephone inquiries should be directed to Customer Service, Office of Initial Patent Examination, at 703-308-1202.

UNITED STATES
PATENT AND
TRADEMARK OFFICE

Commissioner for Patents
Washington, DC 20231
www.uspto.gov

Signature of Reviewer, Office of Initial Patent Examination

# UNITED STATES PATENT AND TRADEMARK OFFICE

UNITED STATES DEPARTMENT OF COMMERCE
United States Patent and Trademark Office
Address: COMMISSIONER FOR PATENTS
P.O. Box 1450
Alexandria, Virginia 22313-1450
www.uspto.gov

| APPLICATION NO. | FILING DATE | FIRST NAMED INVENTOR | ATTORNEY DOCKET NO. | CONFIRMATION NO. |
|---|---|---|---|---|
| 10/622,037 | 07/16/2003 | James E. Blum | 01-7081 | 2256 |

32681 7590 08/25/2005

PLANTRONICS, INC.
345 ENCINAL STREET
P.O. BOX 635
SANTA CRUZ, CA 95060-0635

| EXAMINER |
|---|
| TSO, EDWARD H |

| ART UNIT | PAPER NUMBER |
|---|---|
| 2838 | |

DATE MAILED: 08/25/2005

Please find below and/or attached an Office communication concerning this application or proceeding.

UNITED STATES PATENT AND TRADEMARK OFFICE

COMMISSIONER FOR PATENTS
UNITED STATES PATENT AND TRADEMARK OFFICE
P.O. BOX 1450
ALEXANDRIA, VA 22313-1450
www.uspto.gov

AUG 25 2005

| | | |
|---|---|---|
| *In re* Application of BLUM, JAMES E. | : | |
| Appl. No.: 10/622,037 | : | **WITHDRAWAL FROM** |
| Filed: July 16, 2003 | : | **ISSUE** |
| For: CHARGER CONTACT | : | *37 CFR 1.313* |
| | : | |
| | : | |
| | : | |
| | : | |

The purpose of this communication is to inform you that the above-identified application is being withdrawn from issue pursuant to 37 CFR 1.313.

The application is being withdrawn to permit reopening of prosecution. The reasons therefor will be communicated to you by the examiner.

U.S. Patent and Trademark Office records reveal that the issue fee and the publication fee have not been paid. If the issue fee and the publication fee have been submitted, the applicant may request a refund, or may request that the fee be credited to a deposit account. However, applicant may wait until the application is either again found allowable or held abandoned. If the application is allowed, upon receipt of a new Notice of Allowance and Fees Due, applicant may request that the previously submitted issue fee and publication fee be applied toward payment of the issue fee and publication fee in the amount identified on the new Notice of Allowance and Issue and Publication Fee Due. If the application is abandoned, applicant may request either a refund or a credit to a specified Deposit Account.

The application is being forwarded to the examiner for action.

Richard K. Seidel
Director
Patent Examining Technology Center 2800

PLANTRONICS, INC.
345 ENCINAL STREET
P.O. BOX 635
SANTA CRUZ, CA 95060-0635

UNITED STATES PATENT AND TRADEMARK OFFICE

COMMISSIONER FOR PATENTS
UNITED STATES PATENT AND TRADEMARK OFFICE
P.O. BOX 1450
ALEXANDRIA, VA 22313-1450
www.uspto.gov

JJGJr: 03-05

Paper No: __

SMITH, GAMBRELL
& RUSSELL, LLP
SUITE 3100, PROMENADE II
1230 PEACHTREE STREET, N.E.
ATLANTA GA 30309-3592

**COPY MAILED**

MAR 08 2005

**OFFICE OF PETITIONS**

| | | |
|---|---|---|
| In re Application of | : | |
| Sanders et al. | : | |
| Application No. 10/622,040 | : | DECISION ON PETITION |
| Filed: 17 July, 2003 | : | |
| Attorney Docket No.: 031264.051US | : | |

This is a decision on the petition filed on 27 December, 2004 under 37 C.F.R. §1.47(a).

The petition is **DISMISSED**.

NOTES:

(1) Any request for reconsideration of this decision must be submitted within TWO (2) MONTHS from the mail date of this decision. Extensions of time under 37 C.F.R. §1.136(a) are permitted. The reconsideration request should include a cover letter entitled "Renewed Petition under 37 C.F.R. §1.47(a)."

(2) There will be no further reconsideration thereafter.

BACKGROUND AND ANALYSIS

The record reflects that:

- the Examiner objected to the oath/declaration in the Office action following Petitioner's

election in response to a restriction requirement, and Petitioner Herbert M. Hanegan (Reg. No. 25,682) filed the instant petition stating therein:

> On December 8, 2004, the original of the attached Declaration was mailed to Mr. [Eugene T. Sanders', the non-signing inventor's] residence. Mr. Sanders has refused to sign the Deceleration and state by phone that he would not sign the Declaration since he is no longer employed by Southwire Company.
>
> Accordingly, it may be seen that Petitioner has presented Mr. Sanders with the Declaration which Mr. Sanders has expressly refused to sign.

- given that statement and the absence of a copy of a transmittal letter demonstrating to the contrary, nowhere is there evidence that the entire application–description, claims, abstract and drawings–were presented to the non-signing inventor as required by statute and regulation and outlined in the Manual of Patent Examining Procedure, as discussed below.

## ANALYSIS

Where a refusal of the inventor to sign the application papers is alleged, the circumstances of the presentation of the application papers and of the refusal must be specified in a statement of facts by the person who presented the inventor with the application papers and/or to whom the refusal was made. Statements by a party not present when an oral refusal is made will not be accepted.

The commentary at MPEP §409.03(d) provides:

> **409.03(d) Proof of Unavailability or Refusal**
>
> INVENTOR CANNOT BE REACHED
>
> Where inability to find or reach a nonsigning inventor "after diligent effort" is the reason for filing under 37 C.F.R. §1.47, a statement of facts should be submitted that fully describes the exact facts which are relied on to establish that a diligent effort was made.
>
> The fact that a nonsigning inventor is on vacation or out of town and is therefore temporarily unavailable to sign the declaration is not an acceptable reason for filing under 37 C.F.R. §1.47.

Furthermore, the fact that an inventor is hospitalized and/or is not conscious is not an acceptable reason for filing under 37 C.F.R. §1.47. 37 C.F.R. §1.43 may be available under these circumstances. See MPEP §409.02. Such a petition under 37 C.F.R. §1.47 will be dismissed as inappropriate.

The statement of facts must be signed, where at all possible, by a person having firsthand knowledge of the facts recited therein. Statements based on hearsay will not normally be accepted. Copies of documentary evidence such as internet searches, certified mail return receipts, cover letters of instructions, telegrams, that support a finding that the nonsigning inventor could not be found or reached should be made part of the statement. The steps taken to locate the whereabouts of the nonsigning inventor should be included statement of facts. It is important that the statement contain facts as opposed to conclusions.

REFUSAL TO JOIN

A refusal by an inventor to sign an oath or declaration when the inventor has not been presented with the application papers does not itself suggest that the inventor is refusing to join the application unless it is clear that the inventor understands exactly what he or she is being asked to sign and refuses to accept the application papers. A copy of the application papers should be sent to the last known address of the nonsigning inventor, or, if the nonsigning inventor is represented by counsel, to the address of the nonsigning inventor's attorney. The fact that an application may contain proprietary information does not relieve the 37 C.F.R. §1.47 applicant of the responsibility to present the application papers to the inventor if the inventor is willing to receive the papers in order to sign the oath or declaration. It is noted that the inventor may obtain a complete copy of the application, unless the inventor has assigned his or her interest in the application, and the assignee has requested that the inventor not be permitted access. See MPEP § 106. It is reasonable to require that the inventor be presented with the application papers before a petition under 37 C.F.R. §1.47 is granted since such a procedure ensures that the inventor is apprised of the application to which the oath or declaration is directed. In re Gray, 115 USPQ 80 (Comm'r Pat. 1956).

Where a refusal of the inventor to sign the application papers is alleged, the circumstances of the presentation of the application papers and of the refusal must be specified in a statement of facts by the person who presented the inventor with the application papers and/or to whom the refusal was made. Statements by a party not present when an oral refusal is made will not be accepted.

Proof that a bona fide attempt was made to present a copy of the application papers (specification, including claims, drawings, and oath or declaration) to the

> nonsigning inventor for signature, but the inventor refused to accept delivery of the papers or expressly stated that the application papers should not be sent, may be sufficient.
>
> When there is an express oral refusal, that fact along with the time and place of the refusal must be stated in the statement of facts. When there is an express written refusal, a copy of the document evidencing that refusal must be made part of the statement of facts. The document may be redacted to remove material not related to the inventor's reasons for refusal.
>
> When it is concluded by the 37 C.F.R. §1.47 applicant that a nonsigning inventor's conduct constitutes a refusal, all facts upon which that conclusion is based should be stated in the statement of facts in support of the petition or directly in the petition. If there is documentary evidence to support facts alleged in the petition or in any statement of facts, such evidence should be submitted. Whenever a nonsigning inventor gives a reason for refusing to sign the application oath or declaration, that reason should be stated in the petition.

Thus, not only must a copy of the entire application must be sent to the last known address of the non-signing inventor (or the estate representative) with a request that he/she sign the declaration for the patent application–and evidence of that transmittal submitted (a reasonable effort must be made to ascertain a current or last known address)–but also the petition (with fee) must state over the signature and registration number of the Petitioner the last known address (and, if appropriate, evidence of the due diligence effort ascertaining same).

Alternatively, an oath or declaration for the patent application in compliance with 37 C.F.R. §§1.63 and 1.64 must be presented.

The declaration must set forth the inventor's residence, citizenship and post office address. An oath or declaration in compliance with 37 C.F.R. §§1.63 and 1.64 signed by the Rule 1.47 applicant is required.[1]

## CONCLUSION

Therefore, the instant petition hereby is **dismissed**.

Further correspondence with respect to this matter should be addressed as follows:

---

[1] See: MPEP 409.03(b).

By mail: Commissioner for Patents[2]
P.O. Box 1450
Alexandria, VA 22313-1450

By FAX: (703) 872-9306 (IFW Formal Filings)
ATTN.: Office of Petitions

By hand: Mail Stop: Petition
Customer Service Window
Randolph Building
401 Dulany Street
Alexandria, VA 22314

Telephone inquiries regarding this decision should be directed to the undersigned at (571) 272-3214.

John J. Gillon, Jr.
Senior Attorney
Office of Petitions

[2] To determine the appropriate addresses for other subject-specific correspondence, refer to the USPTO Web site at www.uspto.gov.

UNITED STATES PATENT AND TRADEMARK OFFICE

Commissioner for Patents
United States Patent and Trademark Office
P.O. Box 1450
Alexandria, VA 22313-1450
www.uspto.gov

ROBERT E. KREBS
THELEN REID & PRIEST LLP
P O BOX 640640
SAN JOSE, CA 95164-0640

COPY MAILED

DEC 20 2004

OFFICE OF PETITIONS

| | | |
|---|---|---|
| In re Application of | : | |
| Steven Jonathan Spinner et al | : | |
| Application No. 10/622,057 | : | DECISION GRANTING PETITION |
| Filed: July 16, 2003 | : | UNDER 37 CFR 1.182 |
| Attorney Docket No. 035334-006 | : | |

This is a decision on the petition under 37 CFR 1.182, filed January 12, 2004, to change the order of inventorship in the above-identified application.

The petition is **granted**.

A corrected Filing Receipt which sets forth the desired order of inventorship accompanies this decision on petition.

This matter is being referred to Technology Center AU 3736 for examination in due course.

Frances Hicks
Petitions Examiner
Office of Petitions
Office of the Deputy Commissioner
for Patent Examination Policy

ENCLOSURE: Corrected Filing Receipt

UNITED STATES PATENT AND TRADEMARK OFFICE

Commissioner for Patents
United States Patent and Trademark Office
P.O. Box 1450
Alexandria, VA 22313-1450
www.uspto.gov

MAILED
FROM DIRECTOR'S OFFICE

JUN 12 2007

TECHNOLOGY CENTER 3600

RYAN, MASON & LEWIS, LLP
90 FOREST AVENUE
LOCUST VALLEY, NY 11560

| | | |
|---|---|---|
| In re Application of: | : | |
| LINEHAN, MARK | : | NOTICE OF WITHDRAWAL |
| Application No. 10/622058 | : | FROM ISSUE |
| Filed: JULY 17, 2003 | : | UNDER 37 CFR § 1.313(b) |
| Attorney Docket No. | : | |
| SOM919980031US2 | | |

The above-identified application is withdrawn from issue due to unpatentability of one or more claims. See 37 CFR § 1.313(b).

The above-identified application is hereby withdrawn from issue.

United States Patent and Trademark Office (USPTO) records indicate that the issue and publication fees have not yet been submitted. If the issue fee and publication fee has been submitted, applicant may request: (1) a refund; or, (2) that the fee be credited to a deposit account. Applicant may, however, wait until such time as the application is either allowed or abandoned to make such request. If the application is subsequently allowed, upon receipt of a new Notice of Allowance and Issue and Publication Fee Due, applicant may further request that the previously submitted issue fee and publication fee be applied toward payment of the issue fee and publication fee in the amount identified in the new Notice of Allowance and Issue and Publication Fee Due. If the application is abandoned, applicant may request either a refund or a credit to a specified Deposit Account.

Telephone inquires should be directed to Supervisory Patent Examiner Andrew Fischer (571)-272-6779.

The above-identified application is being forwarded to the examiner for prompt appropriate action, including notifying applicant of the new status of this application.

Wynn Coggins, Director
Technology Center 3600

cc: Office of Patent Publication

UNITED STATES PATENT AND TRADEMARK OFFICE

Commissioner for Patents
United States Patent and Trademark Office
P.O. Box 1450
Alexandria, VA 22313-1450
www.uspto.gov

**Sterne, Kessler, Goldstein & Fox, P.L.L.C.**
**1100 New York Avenue, N.W.**
**Washington, DC 20005**

MAILED

AUG 11 2009

OFFICE OF PETITIONS

In re Patent No. 6,932,971 :
Issue Date: August 23, 2005 :
Application No. 10/622,064 :
Filed: July 18, 2003 :
Attorney Docket No. 1700.0300001/BJD/SJE :

NOTICE

This is a notice regarding your request for acceptance of a fee deficiency submission under 37 CFR 1.28. On September 1, 1998, the Court of Appeals for the Federal Circuit held that 37 CFR 1.28(c) is the sole provision governing the time for correction of the erroneous payment of the issue fee as a small entity. **See DH Technology v. Synergystex International, Inc. 154 F.3d 1333, 47 USPQ2d 1865 (Fed. Cir. Sept. 1, 1998).**

The Office no longer investigates or rejects original or reissue applications under 37 CFR 1.56. **1098 Off. Gaz. Pat. Office 502 (January 3, 1989)**. Therefore, nothing in this Notice is intended to imply that an investigation was done.

The petition is **DISMISSED**.

The petition is not acceptable because the signature on the petition Sonja Grasser was not signed by a proper party. See 37 CFR 1.33(b) which states:

> (b) Amendments and other papers. Amendments and other papers, except for written assertions pursuant to § 1.27(c)(2)(ii) of this part, filed in the application must be signed by:
> (1) A registered patent attorney or patent agent of record appointed in compliance with § 1.32(b);
> (2) A registered patent attorney or patent agent not of record who acts in a representative capacity under the provisions of § 1.34;
> (3) An assignee as provided for under §3.71(b) of this chapter; or
> (4) All of the applicants (§ 1.41(b)) for patent, unless there is an assignee of the entire interest and such assignee has taken action in the application in accordance with § 3.71 of this chapter.

Telephone inquiries related to this decision should be directed to the Kimberly Inabinet at (571) 272-4618.

Carl Friedman
Petitions Examiner
Office of Petitions

UNITED STATES PATENT AND TRADEMARK OFFICE

Commissioner for Patents
United States Patent and Trademark Office
P.O. Box 1450
Alexandria, VA 22313-1450
www.uspto.gov

MAR 24 2006

JOHN S. PRATT, ESQ
KILPATRICK STOCKTON, LLP
1100 PEACHTREE STREET
ATLANTA GA 30309

| | |
|---|---|
| In re Application of | : |
| Juan Jose Legarda Ibanez | : PETITION TO MAKE SPECIAL |
| Serial No.: 10/622,068 | : |
| Filed: July 15, 2003 | : |
| Attorney Docket No.: 158235-0009 | |

This is in response to applicant's petition filed March 6, 2006, to make the above-identified application special under the provisions of 37 CFR 1.102(d).

Applicant has satisfied the provisions set forth in M.P.E.P. 708.02, VIII. (A), (B), (C), (D), and (E). The $130.00 petition fee as required by 37 CFR 1.17(h) was received. Therefore, the petition is **GRANTED**.

**The application will be forwarded the examiner for action on the merits commensurate with this decision.**

Should there be any questions with regard to this letter please contact Marianne C. Seidel by letter addressed to the Director, Technology Center 1600, P.O. Box 1450, Alexandria, VA 22313-1450, or by telephone at 571-272-0584 or by facsimile transmission at the general Office facsimile number, (703) 872-9306.

Marianne C. Seidel
Special Program Examiner
Technology Center 1600

UNITED STATES PATENT AND TRADEMARK OFFICE

COMMISSIONER FOR PATENTS
UNITED STATES PATENT AND TRADEMARK OFFICE
P.O. BOX 1450
ALEXANDRIA, VA 22313-1450
WWW.USPTO.GOV

Paper No. None

JOHN S. PRATT, ESQ
KILPATRICK STOCKTON, LLP
1100 PEACHTREE STREET
ATLANTA GA 30309

COPY MAILED
MAR 30 2006
OFFICE OF PETITIONS

| | | |
|---|---|---|
| In re Application of<br>Juan Jose Legarda Ibanez<br>Application No. 10/622,068<br>Filed: July 15, 2003<br>Attorney Docket Number: 158235-0009<br>Title: USE OF FLUMAZENIL IN THE PRODUCTION OF A MEDICAMENT FOR THE TREATMENT OF COCAINE DEPENDENCY | :<br>:<br>:<br>:<br>:<br>:<br>:<br>:<br>: | DECISION ON PETITION<br>UNDER 37 C.F.R. §1.181 |

This is a decision on the petition filed August 1, 2005, pursuant to 37 C.F.R. §1.181, requesting that the holding of abandonment in the above-identified application be withdrawn.

The Office regrets the delay in issuing this decision.

The above-identified application became abandoned for failure to reply in a timely manner to the Notice of Missing Parts (notice), mailed October 17, 2003, which set a shortened statutory period for reply of two (2) months. No response was received, and no extensions of time under the provisions of 37 C.F.R. §1.136(a) were requested. Accordingly, the above-identified application became abandoned on December 18, 2003.

With the present petition, Petitioner has asserted that a response to this communication was submitted on December 22, 2003, along with a one-month extension of time. Petitioner has submitted a copy of this submission, and it is noted that it contains a certificate of mailing dated December 22, 2003.

Petitioner has requested that the holding of abandonment in the above-identified application be withdrawn. It is clear that a response was timely submitted. Considering the facts and circumstances of the delay at issue, as set forth on petition, it is concluded that petitioner has met his burden of establishing that a submission was timely submitted.

Accordingly, the petition under 37 C.F.R. §1.181(a) is **GRANTED**. The holding of abandonment is **WITHDRAWN.**

The appropriate fees have been charged to Petitioner's Deposit Account, as authorized in the submission of December 22, 2003.

The Technology Center will be notified of this decision.

Telephone inquiries regarding *this decision* should be directed to the undersigned at (571) 272-3225. All other inquiries concerning examination procedures or status of the application should be directed to the Technology Center.

**Paul Shanoski**
**Senior Attorney**
**Office of Petitions**
**United States Patent and Trademark Office**

UNITED STATES PATENT AND TRADEMARK OFFICE

Commissioner for Patents
United States Patent and Trademark Office
P.O. Box 1450
Alexandria, VA 22313-1450
www.uspto.gov

COPY MAILED

AUG 0 2 2006

OFFICE OF PETITIONS

Schwegman, Lundberg, Woessner & Kluth
P.O. Box 2938
Minneapolis, MN 55402

| | | |
|---|---|---|
| In re Application of | : | |
| Kathryn E. Uhrich | : | |
| Application No. 10/622,072 | : | DECISION ON PETITION |
| Filed: July 17, 2003 | : | TO WITHDRAW |
| Attorney Docket No. 1435.028US1 | : | FROM RECORD |
| | : | |

This is a decision on the Request to Withdraw as attorney or agent of record under 37 C.F.R. § 1.36(b), filed March 24, 2006.

The request is **NOT APPROVED** as moot.

A review of the file record indicates that the power of attorney to Monique M. Perdok Shonka and the attorney(s) or agent(s) associated with Customer Number 21186 have been revoked by the assignee of the patent application on May 1, 2006. Accordingly, the request to withdraw under 37 C.F.R. § 1.36(b) is moot.

All future communications from the Office will continue to be directed to the below-listed address until otherwise notified by applicant.

Telephone inquires concerning this decision should be directed to Terri Williams at 571-272-2991.

for David Bucci
Petitions Examiner
Office of Petitions

cc: Vlksnins, Harris & Padys PLLP
7900 International Drive, Suite 870
Bloomington, MN 55425

UNITED STATES PATENT AND TRADEMARK OFFICE

COMMISSIONER FOR PATENTS
UNITED STATES PATENT AND TRADEMARK OFFICE
P.O. BOX 1450
ALEXANDRIA, VA 22313-1450
www.uspto.gov

Helen C. Lockhart
Wolf, Greenfield & Sacks, P.C.
Federal Reserve Plaza
600 Atlantic Avenue
Boston MA 02210

COPY MAILED

MAR 07 2005

OFFICE OF PETITIONS

Applicant: Gilmanshin
Appl. No.: 10/622,076
Filing Date: July 17, 2003
Title: METHODS AND COMPOSITIONS FOR ANALYZING POLYMERS USING CHIMERIC TAGS
Attorney Docket No.: C0989.7005US00
Pub. No.: US 2004/0053399 A1
Pub. Date: March 18, 2004

This is in response to the request for a corrected patent application publication under 37 CFR 1.221(b), which was filed on April 19, 2004.

The request is DISMISSED.

The instant request is that the application be republished because the patent application publication contains several mistakes as the phrase "[i]n preferred embodiments, the tag molecules are 6-100 nucleotides in length, more preferably between 5-25 nucleotides in length, and even more preferably 5-12 nucleotides in length" is misprinted as "[i]n preferred embodiments, the tag molecules are 6-100 nucleotides in length, more preferably between 525 nucleotides in length, and even more preferably 5-12 nucleotides in length" in paragraph [0076] and "DNase I" is misprinted as "DNase 1" in paragraph [0089].

37 CFR 1.221(b) is applicable "only when the Office makes a material mistake which is apparent from Office records . . . Any request for a corrected publication or revised patent application publication other than provided as provided in paragraph (a) of this section must be filed within two months from the date of the patent application publication. This period is not extendable." A material mistake must affect the public's ability to appreciate the technical disclosure of the patent application publication, to determine the scope of the patent application publication, or to determine the scope of the provisional rights that an applicant may seek to enforce upon issuance of a patent.[1]

[1] Changes to Implement Eighteen-Month Publication of Patent Applications, 65 FR 57023, 57038 (Sept. 20, 2000), 1239 Off. Gaz. Pat. Office Notices 63, 75 (Oct. 10, 2000) (final rule).

The error noted by requestor wherein "more preferably between 5-25 nucleotides in length" is misprinted as "more preferably between 525 nucleotides in length" is an Office error, but the mistake is a minor typographical error, which is clearly understandable to one of ordinary skill in reading the specification and the claims. The mistake is a minor typographical error which is clearly understandable from reading the specification and claims in which the term is used, as terms are not read in a vacuum and the phrase is referring to a range. The mistake does not affect the public's ability to appreciate the technical disclosure of the patent application publication, or determine the scope of the patent application publication or determine the scope of the provisional rights that an applicant may seek to enforce upon issuance of a patent. Furthermore, this is not a material error since the Image File Wrapper (IFW) for this application is available to the public, as of July 31, 2004. The error noted by requestor wherein "DNase I" is misprinted as "DNase 1" is not clearly an Office error, as it is not clear from page 18, line 18 "DNase I" is in the text as filed.

Applicant should file applications having larger text, which is cleaner and with sufficient clarity and contrast to permit reproduction to avoid errors in the patent application publication process. See 37 CFR 1.52.

The applicant is advised that a "request for republication of an application previously published" may be filed under 37 CFR 1.221(a). Such a request for republication "must include a copy of the application in compliance with the Office's electronic filing system requirements and be accompanied by the publication fee set forth in § 1.18(d) and the processing fee set forth in § 1.17(i)." If the request for republication does not comply with the electronic filing system requirements, the republication will not take place and the publication fee set forth in § 1.18(d) will be refunded. The processing fee will be retained.

Any request for republication under 37 CFR 1.221(a), must be submitted via the EFS system and questions or request for reconsideration of this decision, should be addressed as follows:

By mail to: Mail Stop PGPUB
Commissioner for Patents
P.O. Box 1450
Alexandria, VA 22313-1450

By facsimile: 703-872-9306

The application will be examined in due course.

Inquiries relating to this matter may be directed to Mark Polutta at (571) 272-7709.

Mark O. Polutta
Office of Patent Legal Administration
Office of the Deputy Commissioner
for Patent Examination Policy

UNITED STATES PATENT AND TRADEMARK OFFICE

Commissioner for Patents
United States Patent and Trademark Office
P.O. Box 1450
Alexandria, VA 22313-1450
www.uspto.gov

MAILED

MAILED MAR 0 2 2010

MAR 0 2 2010 OFFICE OF PETITIONS

OFFICE OF PETITIONS

SCHWEGMAN, LUNDBERG & WOESSNER, P.A.
P.O. BOX 2938
MINNEAPOLIS MN 55402

| | | |
|---|---|---|
| In re Patent No. 7,323,629 | : | |
| Issue Date: 01/29/2008 | : | |
| Application No. 10/622,083 | : | ON PETITION |
| Filed: 07/16/2003 | : | |
| Attorney Docket No. 900.190US1 | : | |

This is a decision on the RESPONSE TO NOTIFICATION RE: REQUEST FOR CERTIFICATE OF CORRECTION AND REQUEST FOR CERTIFICATE OF CORRECTION, filed March 16, 2009, which is properly treated as a petition under 37 CFR 3.81(b).

Patentees request correction of the front page of the Letters Patent to include the correct assignee data via Certificate of Correction. With the present request, patentees submitted a completed Certificate of Correction form and paid the requisite fees. Furthermore, it is noted that the assignment was recorded with the USPTO prior to the issuance of the patent.

In view of the above, the request under 37 CFR 3.81(b) to correct the assignee data is GRANTED.

Telephone inquiries concerning this decision may be directed to the undersigned at (571) 272-3211. Inquiries regarding the issuance of a certificate of correction should be directed to the Certificate of Correction Branch at (571) 272-4200.

The Certificates of Correction Branch will be notified of this decision granting the petition under 37 CFR 3.81(b) and directing issuance of the requested Certificate of Correction as to the assignment information.

Christina Tartera Donnell

Christina Tartera Donnell
Senior Petitions Attorney
Office of Petitions

UNITED STATES PATENT AND TRADEMARK OFFICE

Commissioner for Patents
United States Patent and Trademark Office
P.O. Box 1450
Alexandria, VA 22313-1450
www.uspto.gov

Date: 07/21/08

Patent No. : 7279165 B2
Ser. No. : 10/622,087
Inventor(s) : BACHMANN, MARTIN F.
Issued : 10/09/07
Title : **AMYLOID BETA 1-6 ANTIGEN ARRAYS**
Docket No. : **1700.0350002/BJD/SJE**

Re: Request for Certificate of Correction

Consideration has been given your request for the issuance of a certificate of correction for the above-identified patent under the provisions of Rule(s) 1.322 and/or 1.323.

Assignees' names and addresses (assignment data) printed in a patent, are based *solely* on information supplied in the appropriate space for identifying the assignment data, i.e., item 3 of the Issue Fee Transmittal Form PTOL-85B. Granting of a request under 37 CFR 3.81(b) is required to correct applicant's error providing ***incorrect or erroneous*** assignment data, *before* issuance of a Certificate of Correction, under 37 CFR 1.323 *(see Manual of Patent Examining Procedures (M.P.E.P) Chp.1400, sect. 1481).* This procedure is required *at any time after the issue fee is paid*, including after issuance of the patent.

In view of the foregoing, your request, in this mater, is hereby denied.

A request to correct the Assignee under 37 CFR 3.81(b) should include:

A. **the processing fee set forth in 37 CFR 1.117(h) (currently $130);**
B. a statement that the failure to include the correct assignee name on the PTOL-85B was inadvertent; and
C. a copy of the Notice of Recordation of Assignment Document, reflecting the reel and frame number where the assignment(s) is recorded and/or reflecting proof of *the date* the assignment was submitted for recordation.

*In the Request*, Applicant(s) may request that the file be forwarded to Certificates of Correction Branch, for issuance of a Certificate of Correction, if the Request is granted.

Any request under 37 CFR 3.81(b) should be directed to the following address or facsimile number:

By mail: Mail Stop PETITIONS
Commissioner for Patents
Post Office Box 1450
Alexandria, VA 22313-1450

By hand: Customer Service Window
Mail Stop Petitions
Randolph Building
401 Dulany Street
Alexandria, VA 22314

By fax: (571) 273-0025
ATTN: Office of Petitions

If a fee (currently $100) was previously submitted for consideration of a Request for Certificate of Correction, under CFR 1.323, to correct assignment data, no additional fee is required.

Lamonte M. Newsome

Lamonte M. Newsome
For Mary Diggs, Supervisor
Decisions & Certificates
Of Correction Branch
(703) 305-8309 or (703) 308-9390 #112

**STERNE, KESSLER, GOLDSTEIN & FOX P.L.L.C.**
**1100 NEW YORK AVENUE, N.W.**
**WASHINGTON DC 20005**

LMN

UNITED STATES PATENT AND TRADEMARK OFFICE

Commissioner for Patents
United States Patent and Trademark Office
P.O. Box 1450
Alexandria, VA 22313-1450
www.uspto.gov

**STERNE, KESSLER, GOLDSTEIN & FOX P.L.L.C.**
**1100 NEW YORK AVENUE, N.W.**
**WASHINGTON DC 20005**

**COPY MAILED**

SEP 1 9 2008

**OFFICE OF PETITIONS**

In re Patent No. 7,279,165 :
Application No. 10/622,087 :
Filed: July 18, 2003 :
Issued: October 9, 2007 :
Attorney Docket No. 1700.0350002/BJD/SJE :

ON PETITION

This is a decision on the petition filed July 28, 2008, which is being treated as a request under 37 CFR 3.81(b)[1] to add the name of the second assignee on the front page of the above-identified patent by way of a Certificate of Correction.

The request is **GRANTED**.

The patent file is being forwarded to the Certificates of Correction Branch for issuance of the requested Certificate of Correction.

Telephone inquiries concerning this decision may be directed to the undersigned at (571) 272-3206. Inquiries regarding the issuance of a certificate of correction should be directed to the Certificate of Correction Branch at (571) 272-4200.

Liana Walsh
Petitions Examiner
Office of Petitions

[1] *See* MPEP 1309, subsection II; and Official Gazette of June 22, 2004.

UNITED STATES PATENT AND TRADEMARK OFFICE

COMMISSIONER FOR PATENTS
UNITED STATES PATENT AND TRADEMARK OFFICE
P.O. BOX 1450
ALEXANDRIA, VA 22313-1450
www.uspto.gov

NIXON & VANDERHYE, PC
1100 N GLEBE ROAD
8TH FLOOR
ARLINGTON VA 22201-4714

COPY MAILED

FEB 17 2004

OFFICE OF PETITIONS

In re Application of
Williams, et al.
Application No. 10/622,134
Filed: July 18, 2003
Attorney Docket No. 550-453
For: EOTAXIN : EOSINOPHIL CHEMOTACTIC CYTOKINE

ON PETITION

This is a decision on the petition filed November 14, 2003, requesting, in effect, withdrawal of a Notice mailed January 7, 2004, insofar as it alleges that Figures 3-5 were omitted from the original filing. The petition will be treated under 37 CFR 1.53(e).

The petition is dismissed.

Any request for reconsideration of this decision must be submitted within TWO (2) MONTHS from the mail date of this decision. Extensions of time under 37 CFR 1.136(a) are permitted. Petitioner is advised that this is not a final agency decision.

The application was filed on July 18, 2003. However, on January 7, 2004, The Office of Initial Patent Examination mailed a "Notice to File Missing Part(s) of Nonprovisional Application" (Notice) stating, *inter alia*, that the application had been accorded a filing date of July 18, 2003, and advising applicants that Figures 3-5, as referenced in the specification, appeared to have been omitted. In response, the present petition was filed.

Petitioners assert that seven sheets of drawings, including allegedly omitted Figures 3-5, which were copies of those in parent application no. PCT/GB94/02006, and an additional 7 sheets of drawings were received in the Office on July 18, 2003. In support, the petition is accompanied by a copy of applicants' itemized postcard receipt showing an Office of Initial Patent Examination date stamp citing July 18, 2003 as the date of receipt. The postcard lists, *inter alia*, that the filing included 7 sheets of drawings and 7 additional sheets of drawings.

The return postcard constitutes *prima facie* evidence that 14 sheets of drawings were filed on July 18, 2003. MPEP 503.

Unfortunately, the only drawings present in the application file are the additional 7 sheets of drawings, which admittedly do not contain a sheet of drawings depicting Figures 3-5. The eight sheets of formal drawings submitted with the instant petition are clearly not the seven sheets of drawings from the parent application.

The Office requires the original seven sheets of drawings be submitted. Then the Office will be able to compare the original seven sheets of drawings to the eight sheets of formal drawings

BEST AVAILABLE COPY

submitted on November 14, 2003. The Office cannot process the November 14, 2003 sheet of drawings containing Figures 3-5 because that sheet -- "2/8"-- was not present upon initial filing and the Office cannot ascertain whether Figures 3-5 as depicted on sheet "2/8" matches what was filed in the Office on July 18, 2003.

Petitioners should submit a reconsideration petition accompanied by the original seven sheets of drawings from the parent application and a request that the eight sheets of drawing filed on November 14, 2003 be used for processing purposes. If Figures 3-5 were among those figures filed on July 18, 2003, then the reconsideration petition will be granted and the petition fee will be refunded.

**If the original 7 sheets of drawing figures do not contain Figures 3-5,** petitioners may seek to add the figures to the present application on the basis that the figures are not new matter because they were originally filed in parent applications, the entire disclosures of which were incorporated by reference at the time of filing.

Additional figures may be entered by the primary examiner without a petition so long as the figures contain no new matter. See MPEP § 608.02(a). If petitioners select this avenue for relief, the petition fee will not be refunded, since the petition was not necessitated by any error on the part of the Office.

MPEP 201.06(c) states that:

> . . . an applicant may incorporate by reference the prior application by including, in the application-as-filed, a statement that such specifically enumerated prior application or applications are "hereby incorporated herein by reference." The statement may appear in the specification or in the application transmittal letter. The inclusion of this incorporation by reference of the prior application(s) will permit an applicant to amend the continuing application to include any subject matter in such prior application(s), without the need for a petition. (emphasis supplied)

If applicants desire that Figures 3-5 be added to the application, the appropriate procedure is by way of amendment requesting the entry of the figures. Any such amendment should be filed prior to the first action on the merits and will be considered by the primary examiner.

Petitioners are requested to submit an additional copy of the parent's declaration because there is no declaration present in the application file, although the Office acknowledged receipt of a one page declaration on July 18, 2003.

Further correspondence with respect to this matter should be addressed as follows:

**By mail:**
Mail Stop PETITION
Commissioner for Patents
Post Office Box 1450
Alexandria, VA 22313-1450
ATTN: E. Shirene Willis

**By hand:**
Crystal Plaza 1 Lobby
2011 South Clark Place
Room 1B03
Arlington, VA 22202
Attn: E. Shirene Willis

BEST AVAILABLE COPY

**By FAX:** (703) 872-9306
ATTN: Office of Petitions -- E. Shirene Willis

The application is being returned to the Office of Initial Patent Examination for further processing with a filing date of **July 18, 2003**. The sheet of drawings containing Figures 3-5 submitted with the instant petition will **not** be processed at this time.

Telephone inquiries specific to this matter should be directed to the undersigned at (703) 308-6712.

E. Shirene Willis

E. Shirene Willis
Senior Petitions Attorney
Office of Petitions
Office of the Deputy Commissioner
for Patent Examination Policy

AVAILABLE COPY

Adjustment date: 02/17/2004 CKHLOK
02/12/2004 MBERHE 00000140 10622134
02 FC:1051 -130.00 OP

02/17/2004 CKHLOK 00000010 10622134
01 FC:1460 130.00 OP

UNITED STATES PATENT AND TRADEMARK OFFICE

COMMISSIONER FOR PATENTS
UNITED STATES PATENT AND TRADEMARK OFFICE
P.O. BOX 1450
ALEXANDRIA, VA 22313-1450
www.uspto.gov

NIXON & VANDERHYE, PC
1100 N GLEBE ROAD
8TH FLOOR
ARLINGTON VA 22201-4714

COPY MAILED

APR 3 0 2004

OFFICE OF PETITIONS

ON PETITION

In re Application of
Williams, et al.
Application No. 10/622,134
Filed: July 18, 2003
Attorney Docket No. 550-453
For: EOTAXIN : EOSINOPHIL CHEMOTACTIC CYTOKINE

This is a decision on the reconsideration petition filed April 13, 2004, requesting, in effect, withdrawal of a Notice mailed January 7, 2004, insofar as it alleges that Figures 3-5 were omitted from the original filing. The petition will be treated under 37 CFR 1.53(e).

The petition is granted. Regarding finances, the $130.00 petition fee submitted on November 14, 2003 will be credited to deposit account no. 14-1140.

The application was filed on July 18, 2003. However, on January 7, 2004, The Office of Initial Patent Examination mailed a "Notice to File Missing Part(s) of Nonprovisional Application" (Notice) stating, *inter alia*, that the application had been accorded a filing date of July 18, 2003, and advising applicants that Figures 3-5, as referenced in the specification, appeared to have been omitted. In response, petitioners filed a petition under 37 CFR 1.53(e) on November 14, 2003.

Petitioners asserted that seven sheets of drawings, including allegedly omitted Figures 3-5, which were copies of those in parent application no. PCT/GB94/02006, and an additional 7 sheets of drawings were received in the Office on July 18, 2003. In support, the petition was accompanied by a copy of applicants' itemized postcard receipt showing an Office of Initial Patent Examination date stamp citing July 18, 2003 as the date of receipt. The postcard lists, *inter alia*, that the filing included 7 sheets of drawings and 7 additional sheets of drawings.

The return postcard constitutes *prima facie* evidence that 14 sheets of drawings were filed on July 18, 2003. MPEP 503.

However, the petition filed November 14, 2003 was dismissed because the only drawings present in the application file were the additional 7 sheets of drawings, which admittedly did not contain Figures 3-5. The eight sheets of formal drawings submitted with the November 14, 2003 petition were clearly not the seven sheets of drawings from the parent application.

Petitioners have submitted the original seven sheets of drawings. The drawings contain a sheet of drawings depicting Figures 3-5. The Office has compared the copy of the original seven sheets of drawings to the eight sheets of formal drawings submitted on November 14, 2003. It is apparent that all figures depicted in the November 14, 2003 formal drawings were present on July 18, 2003.

Therefore, the application is being returned to the Office of Initial Patent Examination for further processing with a filing date of **July 18, 2003**. The formal drawings filed on November 14, 2003 will be used for processing purposes.

Telephone inquiries specific to this matter should be directed to the undersigned at (703) 308-6712.

E. Shirene Willis

E. Shirene Willis
Senior Petitions Attorney
Office of Petitions
Office of the Deputy Commissioner
for Patent Examination Policy

## SPE RESPONSE FOR CERTIFICATE OF CORRECTION

**Paper No.**:93005

10/622143

**DATE** : September 30, 2005

**TO SPE OF** : ART UNIT 2851

**SUBJECT** : Request for Certificate of Correction on Patent No.:

A response is requested with respect to the accompanying request for a certificate of correction.

Please complete this form and return with file, within **7** days to:
**Certificates of Correction Branch - PK 3-910**
Palm location **7590** - Tel. No. 305-8201

With respect to the change(s) requested, correcting Office and/or Applicant's errors, should the patent read as shown in the certificate of correction? No new matter should be introduced, nor should the scope or meaning of the claims be changed.

**Thank You For Your Assistance** **Certificates of Correction Branch**

**The request for issuing the above-identified correction(s) is hereby:**
Note your decision on the appropriate box.

☒ **Approved** **All** changes apply.

☐ **Approved in Part** Specify below which changes **do not** apply.

☐ **Denied** State the reasons for denial below.

**Comments:**

Judy Nguyen

**SPE:** Judy Nguyen **Art Unit** 2851

UNITED STATES PATENT AND TRADEMARK OFFICE

Commissioner for Patents
United States Patent and Trademark Office
P.O. Box 1450
Alexandria, VA 22313-1450
www.uspto.gov

MCDONNELL BOEHNEN HULBERT &
BERGHOFF LLP
300 S. WACKER DRIVE
32ND FLOOR
CHICAGO IL 60606

COPY MAILED

SEP 22 2005

OFFICE OF PETITIONS

| | | |
|---|---|---|
| In re Application of | : | |
| Tom McCarthy et al | : | |
| Application No. 10/622,146 | : | DECISION GRANTING PETITION |
| Filed: July 16, 2003 | : | UNDER 37 CFR 1.137(b) |
| Attorney Docket No. 03-637 | : | |

This is a decision on the petition, filed March 14, 2005, which is being treated as a petition under 37 CFR 1.137(b) to revive the instant nonprovisional application for failure to timely notify the U.S. Patent and Trademark (USPTO) of the filing of an application in a foreign country, or under a multinational treaty that requires publication of applications eighteen months after filing. *See* 37 CFR 1.137(f).

The petition is **GRANTED**.

Petitioner states that the instant nonprovisional application is the subject of an application filed in an eighteen month publication country on July 16, 2004. However, the USPTO was unintentionally not notified of this filing within 45 days subsequent to the filing of the subject application in an eighteen month publication country.

In view of the above, this application became abandoned pursuant to 35 U.S.C. § 122(b)(2)(B)(iii) and 37 CFR 1.213(c) for failure to timely notify the Office of the filing of an application in a foreign country or under a multilateral international agreement that requires publication of applications 18 months after filing.

A petition to revive an application abandoned pursuant to 35 U.S.C. 122(b)(2)(B)(iii) for failure to notify the USPTO of a foreign filing must be accompanied by:

(1) the required reply which is met by the notification of such filing in a foreign country or under a multinational treaty;
(2) the petition fee as set forth in 37 CFR 1.17(m); and
(3) a statement that the entire delay in filing the required reply from the due date of the reply until the filing of a grantable petition was unintentional.

The instant petition has been found to be in compliance with 37 CFR 1.137(b). Accordingly, the failure to timely notify the USPTO of a foreign or international filing within 45 days after the date of filing of such foreign or international application as provided by 35 U.S.C. § 122(b)(2)(B)(iii) and 37 CFR 1.213(c) is accepted as having been unintentionally delayed.

The previous Request and Certification under 35 U.S.C. § 122(b)(2)(B)(i) has been rescinded. A Notice Regarding Rescission of Nonpublication Request accompanies this decision on petition.

Any inquiries concerning this decision may be directed to the undersigned at (571) 272-3208.

This matter is being referred to Technology Center Art Unit 3621.

Karen Creasy

Karen Creasy
Petitions Examiner
Office of Petitions
Office of the Deputy Commissioner
for Patent Examination Policy

ATTACHMENT: Notice Regarding Rescission of Nonpublication Request

UNITED STATES PATENT AND TRADEMARK OFFICE

COMMISSIONER FOR PATENTS
UNITED STATES PATENT AND TRADEMARK OFFICE
P.O. BOX 1450
ALEXANDRIA, VA 22313-1450
www.uspto.gov

Paper No.

BRINKS HOFER GILSON & LIONE
P.O. BOX 10395
CHICAGO IL 60610

COPY MAILED

SEP 25 2006

OFFICE OF PETITIONS

| | | |
|---|---|---|
| In re Application of | : | |
| Ramey et al. | : | DECISION ON APPLICATION |
| Application No. 10/622,162 | : | FOR |
| Filed: July 15, 2003 | : | PATENT TERM ADJUSTMENT |
| Attorney Docket No. 12493-13 | : | |

This is a decision on the "REQUEST FOR RECONSIDERATION OF PATENT TERM ADJUSTMENT PURSUANT TO 37 C.F.R. § 1.705(b)," filed November 17, 2005. Applicants request that the initial determination of patent term adjustment under 35 U.S.C. 154(b) be corrected from twenty-four (24) days to one hundred sixty-nine (169) days.

The application for patent term adjustment is **DISMISSED**.

On August 21, 2005, the Office mailed the Determination of Patent Term Adjustment under 35 U.S.C. 154(b) in the above-identified application. The Notice stated that the patent term adjustment (PTA) to date is 24 days. On November 17, 2005, applicants timely submitted the instant application for patent term adjustment[1]. Applicants contend that the period of adjustment for Office delay should be 174 days rather than 29 days. Specifically, applicants argue that the first Office Action was withdrawn in favour of the Office Action mailed on March 8, 2005. Applicants request correction of the mailing date of the first action on the merits and re-calculation of the patent term adjustment to take the corrected date into account.

Applicants' argument is not well taken. Pursuant to 37 C.F.R. § 1.702(a),

> Subject to the provisions of 35 U.S.C. 154(b) and this subpart, the term of an original patent shall be adjusted

[1] PALM records indicate that the Issue Fee payment was received on November 28, 2005.

if the issuance of the patent was delayed due to the failure of the Office to:

(1) Mail at least one of a notification under 35 U.S.C. 132 or a notice of allowance under 35 U.S.C. 151 not later than fourteen months after the date on which the application was filed under 35 U.S.C. 111(a) or fulfilled the requirements of 35 U.S.C. 371 in an international application;

On October 14, 2004, the Office mailed a non-final rejection in this application. This was fourteen months and 29 days after the filing of the application on July 15, 2003. Accordingly, a period of adjustment of 29 days was entered.

The subsequent mailing of a non-final Office action withdrawing this action does not negate the fact that the Office took action in this application within the meaning of § 1.702(a)(1) on October 14, 2004.

The determination of patent term adjustment at the time of the mailing of the Notice of Allowance of twenty-four (24) days is correct.

Receipt of the $200.00 fee set forth in 37 CFR 1.18(e) is acknowledged. No additional fees are required.

The application is being forwarded to the Office of Patent Publication for issuance of the patent. The patent term adjustment indicated on the patent will include any additional adjustment accrued both for Office delay in issuing the patent more than four months after payment of the issue fee and satisfaction of all outstanding requirements, and for the Office taking in excess of three years to issue the patent (to the extent that the three-year period does not overlap with periods already accorded).

Telephone inquiries specific to this matter should be directed to the undersigned at (571) 272-3219.

Nancy Johnson
Senior Petitions Attorney
Office of Petitions

UNITED STATES PATENT AND TRADEMARK OFFICE

Commissioner for Patents
United States Patent and Trademark Office
P.O. Box 1450
Alexandria, VA 22313-1450
www.uspto.gov

**RICHARD N. SHAPIRO**
**C/O HAJEK SHAPIRO COOPER & LEWIS**
**1294 DIAMOND SPRINGS ROAD**
**VIRGINIA BEACH, VA 23455**

COPY MAILED

OCT 14 2005

OFFICE OF PETITIONS

In re Application of :
Richard N. Shapiro :
Application No. 10/622,172 : ON PETITION
Filed: July 18, 2003 :
Attorney Docket No. P06288US07/RFH :

This is a decision on the renewed petition under 37 CFR 1.137(b), filed October 5, 2005 and resubmitted on October 7, 2005, to revive the above-identified application.

The petition is **DISMISSED**.

Any request for reconsideration of this decision must be submitted within TWO (2) MONTHS from the mail date of this decision. Extensions of time under 37 CFR 1.136(a) are permitted. The reconsideration request should include a cover letter entitled "Renewed Petition under 37 CFR 1.137(b)." Petitioner is advised that this is **not** a final agency action decision.

The above-identified application became abandoned for failure to reply in a timely manner to the non-final Office action mailed March 29, 2005, which set a shortened statutory period for reply of thirty (30) days. No extensions of time under the provisions of 37 CFR 1.136(a) were obtained. Accordingly, the above-identified application became abandoned on April 28, 2005.

A grantable petition to revive an abandoned application under 37 CFR 1.137(b) must be accompanied by: (1) the required reply (unless previously filed), which may met by the filing of a continuing application in a nonprovisional application abandoned for failure to prosecute, but must be the payment of the issue fee or any outstanding balance thereof in an application or patent, abandoned or lapsed for failure to pay the issue fee or any portion thereof; (2) the petition fee as set forth in 37 CFR 1.17(m); (3) a statement that the entire delay in filing the required reply

from the due date for the reply until the filing of a grantable petition pursuant to 37 CFR 1.137(b) was unintentional; and (4) any terminal disclaimer (and fee as set forth in 37 CFR 1.20(d)). This petition lacks items (**1**) and (**3**) above.

As to item (1),A petition to revive cannot be granted where there is an outstanding requirement.

In the instant case, there was no response to the outstanding official action submitted. Accordingly, the petition to revive cannot be granted until such time as the outstanding response requirement is received.

As to item (3), petitioner must submit a statement that the entire delay in filing the required reply from the due date for the reply until of a grantable petition pursuant to 37 CFR 1.137(b) was unintentional.

Petitioner alleging that a response was sent to the Office on April 13, 2005. The Office has no record of the response having been filed on or about that date. If petitioner wishes to pursue this argument with any renewed petition, then petitioner must provide proof that the response was sent to the Office on or about that date in the form of a stamped postcard receipt itemizing the response or an Express Mail label indicating that the response for the instant application was deposited with the United States Postal Service on or about that date. MPEP 503, 37 CFR 1.10.

Further correspondence with respect to this matter should be addressed as follows:

By mail: Mail Stop PETITIONS
Commissioner for Patents
Post Office Box 1450
Alexandria, VA 22313-1450

By hand: Customer Service Window
Randolph Building
401 Dulany Street
Alexandria, VA 22314

By fax: (571) 273-8300

Telephone inquiries concerning this decision should be directed to Wan Laymon at (571) 272-3220.

Wan Laymon
Petitions Examiner
Office of Petitions

UNITED STATES PATENT AND TRADEMARK OFFICE

Commissioner for Patents
United States Patent and Trademark Office
P.O. Box 1450
Alexandria, VA 22313-1450
www.uspto.gov

**RICHARD N. SHAPIRO**
**C/O HAJEK SHAPIRO COOPER & LEWIS**
**1294 DIAMOND SPRINGS ROAD**
**VIRGINIA BEACH, VA 23455**

COPY MAILED

DEC 1 5 2005

OFFICE OF PETITIONS

| | | |
|---|---|---|
| In re Application of | : | |
| Richard N. Shapiro | : | |
| Application No. 10/622,172 | : | ON PETITION |
| Filed: July 18, 2003 | : | |
| Attorney Docket No. P06288US07/RFH | : | |

This is a decision on the renewed petition under 37 CFR 1.137(b), filed October 26, 2005, to revive the above-identified application.

The petition is **GRANTED**.

Effective December 1, 1997, 37 CFR 1.137(b)(3) requires a statement that "the entire delay in filing the required reply from the due date for the reply until the filing of a grantable petition pursuant to 37 CFR 1.137(b) was unintentional" be submitted. However, the statement presented will be accepted and construed as meaning that "the entire delay in filing the required reply from the due date for the reply until the filing of a grantable petition pursuant to 37 CFR 1.137(b) was unintentional." If this is an incorrect interpretation in view of the rules, petitioner is required to provide a statement to that effect.

Telephone inquiries concerning this decision should be directed to Wan Laymon at (571) 272-3220.

This matter is being referred to Technology Center AU 3618.

Wan Laymon

Wan Laymon
Petitions Examiner
Office of Petitions

UNITED STATES PATENT AND TRADEMARK OFFICE

Commissioner for Patents
United States Patent and Trademark Office
P.O. Box 1450
Alexandria, VA 22313-1450
www.uspto.gov

MAILED

FEB 04 2010

OFFICE OF PETITIONS

**MEDTRONIC, INC.**
**710 MEDTRONIC PARKWAY NE**
**MINNEAPOLIS MN 55432-9924**

| | | |
|---|---|---|
| In re Application of | : | |
| Eckhard Alt | : | |
| Application No. 10/622,184 | : | ON PETITION |
| Filed: July 15, 2003 | : | |
| Attorney Docket No. P0028935.05 | : | |

This is a decision on the petition under the unintentional provisions of 37 CFR 1.137(b), filed November 23, 2009, to revive the above-identified application.

The petition is **GRANTED**.

The application became abandoned for failure to timely file a reply within the meaning of 37 CFR 1.113 to the final Office action of December 21, 2006. The proposed reply required for consideration of a petition to revive must be a Notice of Appeal (and appeal fee required by 37 CFR 41.20(b)(2), an amendment that *prima facie* places the application in condition for allowance, a Request for Continued Examination and submission (37 CFR 1.114), or the filing of a continuing application under 37 CFR 1.53(b). See MPEP 711.03(c)(III)(A)(2). No extensions of time pursuant to the provisions of 37 CFR 1.136(a) were obtained. Accordingly, the date of abandonment of this application is March 22, 2007. The Notice of Abandonment was mailed July 13, 2007.

The petition satisfies the requirements of 37 CFR 1.137(b) in that petitioner has supplied (1) the reply in the form of a Request for Continued Examination (RCE) and fee of $810, and the submission required by 37 CFR 1.114; (2) the petition fee of $1,620; and (3) a proper statement of unintentional delay.

It is not apparent whether the person signing the statement of unintentional delay was in a position to have firsthand or direct knowledge of the facts and circumstances of the delay at issue. Nevertheless, such statement is being treated as having been made as the result of a reasonable inquiry into the facts and circumstances of such delay. See 37 CFR 10.18(b) and Changes to Patent Practice and Procedure; Final Rule Notice, 62 Fed. Reg. 53131, 53178 (October 10, 1997), 1203 Off. Gaz. Pat. Office 63, 103 (October 21, 1997). In the event that such an inquiry has not been made, petitioner must make such an inquiry. If such inquiry results in the discovery that it is not correct that the entire delay in filing the required reply from the due

date for the reply until the filing of a grantable petition pursuant to 37 CFR 1.137(b) was unintentional, petitioner must notify the Office.

There is no indication that the person signing the petition was ever given a power of attorney to prosecute the application. If the person signing the petition desires to receive future correspondence regarding this application, the appropriate power of attorney document must be submitted. While a courtesy copy of this decision is being mailed to the person signing the petition, all future correspondence will be directed to the address currently of record until appropriate instructions are received.

Telephone inquiries concerning this decision should be directed to the undersigned at (571) 272-2991.

This application is being referred to Technology Center AU 3736 for processing of the RCE and for appropriate action by the Examiner in the normal course of business on the amendment submitted in accordance with 37 CFR 1.114.

Terri Johnson

Terri Johnson
Petitions Examiner
Office of Petitions

cc: **WILLIAM D. BAUER**
**P.O. BOX 18455**
**MINNEAPOLIS, MN 55418**

UNITED STATES PATENT AND TRADEMARK OFFICE

Commissioner for Patents
United States Patent and Trademark Office
P.O. Box 1450
Alexandria, VA 22313-1450
www.uspto.gov

MCANDREWS HELD & MALLOY, LTD
500 WEST MADISON STREET
SUITE 3400
CHICAGO, IL 60661

COPY MAILED
NOV 2 0 2008

In re Application of :
Alexander G. MacInnis, et al. :
Application No.: 10/622,194 : ON PETITION
Filed: July 18, 2003 :
Attorney Docket No.: 17414US03 :

This is a decision on the petition, filed November 18, 2008, under 37 CFR 1.313(c)(2) to withdraw the above-identified application from issue after payment of the issue fee.

The petition is **GRANTED**.

The above-identified application is withdrawn from issue for consideration of a submission under 37 CFR 1.114 (request for continued examination). See 37 CFR 1.313(c)(2).

***Petitioner is advised that the issue fee paid on November 7, 2008, cannot be refunded. If, however, this application is again allowed, petitioner may request that it be applied towards the issue fee required by the new Notice of Allowance.***[1]

Telephone inquiries relating to this decision should be directed to the undersigned at (571) 272-3204.

The application is being referred to Technology Center AU 2179 for further processing of the request for continued examination under 37 CFR 1.114 and for consideration of the concurrently filed Information Disclosure Statement (IDS).

/SDB/

Sherry D. Brinkley
Petitions Examiner
Office of Petitions

[1] *The request to apply the issue fee to the new Notice may be satisfied by completing and returning the new Part B - Fee(s) Transmittal Form (along with any balance due at the time of submission). Petitioner is advised that the Issue Fee Transmittal Form* ***must*** *be completed and timely submitted to avoid abandonment of the application.*

cc: ALEXIS SAENZ
SHIMOKAJI & ASSOCIATES, P.C.
8911 RESEARCH DRIVE
IRVINE, CA 92618

UNITED STATES PATENT AND TRADEMARK OFFICE

Commissioner for Patents
United States Patent and Trademark Office
P.O. Box 1450
Alexandria, VA 22313-1450
www.uspto.gov

JANELLE D. WAACK
HOWREY SIMON ARNOLD & WHITE, LLP
750 BERING DRIVE
HOUSTON TX 77057-2198

COPY MAILED

JUL 1 3 2004

OFFICE OF PETITIONS

In re Application of
Gerard F. Barry et al.
Application No. 10/622,201
Filed: July 18, 2003
Attorney Docket No. 11899.0175.REUS07

DECISION ON PETITION

This is a decision on the petition filed June 10, 2004, under 37 CFR 1.53, requesting a filing date of July 18, 2003 for the above identified application.

Application papers in the above-identified application were filed on July 18, 2003. However, on May 10, 2004, the Office of Initial Patent Examination mailed a "Notice of Incomplete Nonprovisional Application," notifying applicant that the application had not been accorded a filing date because a complete specification as prescribed by 35 U.S.C. 112 had not been filed. The Notice indicated that a Specification with at least one claim was required.

Petitioner argues that a copy of U.S. Patent 5,633,435, containing the specification and claims from that patent were included with the application on filing.

A review of the file reveals that the specification which includes claims and remarks on pages numbered 2-15 had been made a part of the record and thus was not missing from the application when filed. Additionally, petitioners assertion that the application had been filed with a specification is corroborated by a properly proffered date stamped return receipt.

In view of the foregoing, the petition under **37 CFR 1.53 is GRANTED**.

Given the basis for granting the petition, no petition fee is due and none will be charged.

The application is being returned to the Office of Initial Patent Examination for

correction of the filing date and a correction of PTO records to show that the specification was submitted with the application on filing.

This application is being forwarded to the Office of Initial Patent Examination (OIPE) for further processing with a filing date of July 18, 2003, using the application papers received in the Office on that date, including the pages of claims and remarks found in the file (numbered 2-15. Applicant will receive appropriate notifications regarding the fees owed, if any, and other information in due course from OIPE.

Telephone inquiries regarding this decision should be directed to the undersigned Petitions Attorney at (703) 305-4497.

Patricia Faison-Ball

Patricia Faison-Ball
Senior Petitions Attorney
Office of Petitions

## SPE RESPONSE FOR CERTIFICATE OF CORRECTION

**Paper No.:** _____

**DATE** : March 14, 2007

**TO SPE OF** : ART UNIT 2837

**SUBJECT** : Request for Certificate of Correction on Patent No.: **7042183 B2 – 10/622214**

A response is requested with respect to the accompanying request for a certificate of correction.

Please complete this form and return with file, within **7** days to:
Palm location **7580, Certificates of Correction Branch – South Tower – 9A22**
If response is for an IFW, **return to employee (named below) via PUBSCofC Team in MADRAS.**
With respect to the change(s) requested, correcting Office and/or Applicant's errors, should the patent read as shown in the certificate of correction (COCIN)? No new matter should be introduced, nor should the scope or meaning of the claims be changed.

**Thank You For Your Assistance**

Elisha Evans
**Certificates of Correction Branch**
***Tel. No. 703-308-9390 EXT 110***

**The request for issuing the above-identified correction(s) is hereby:**
Note your decision on the appropriate box.

- [X] **Approved** — **All** changes apply.
- [ ] **Approved in Part** — Specify below which changes **do not** apply.
- [ ] **Denied** — State the reasons for denial below.

**Comments:**

_____

_____

_____

_____

_____

SPE — 2837 Art Unit

UNITED STATES PATENT AND TRADEMARK OFFICE

Commissioner for Patents
United States Patent and Trademark Office
P.O. Box 1450
Alexandria, VA 22313-1450
www.uspto.gov

AARON WOLF BAUM
960 NATOMA STREET #3
SAN FRANCISCO, CA 94103

COPY MAILED

MAY 15 2007

OFFICE OF PETITIONS

ON PETITION

In re Application of
Zachariah J. Baum, et al.
Application No. 10/662,230
Filed: September 15, 2003
Attorney Docket No. None

This is a decision in response to the petition, filed January 16, 2007, to revive the above-identified application under the provisions of 37 CFR 1.137(b).

The petition is **GRANTED**.

The application became abandoned for a failure to reply in a timely manner to a non-final Office action mailed March 8, 2006. This decision precedes the mailing of a Notice of Abandonment. On January 16, 2007, the present petition was filed.

The petition is found to comply with the requirements of 37 CFR 1.137(b) in that petitioner has supplied (1) a reply to the outstanding Office action; (2) the petition fee of $750.00; and (3) the requisite statement of unintentional delay.

It is noted that the address given on the petition differs from the address of record. While a change of address accompanied the present petition, it cannot be accepted since it is not signed by all the inventors as required by 37 CFR 1.33. if appropriate, a proper change of address should be filed in this case in accordance with MPEP 601.03. A courtesy copy of this decision is being mailed to the address noted on the petition. However, until otherwise instructed, all future correspondence regarding this application will be mailed solely to the address of record.

The application is being referred to Technology Center AU 2162 for consideration of the response filed January 16, 2007.

Telephone inquiries concerning this decision should be directed to the undersigned at (571) 272-3204. Inquiries relating to further prosecution should be directed to the Technology Center.

Sherry D. Brinkley
Petitions Examiner
Office of Petitions

cc: AARON WOLF BAUM
611 MASON STREET #504
SAN FRANCISCO, CA 94108

UNITED STATES PATENT AND TRADEMARK OFFICE

Commissioner for Patents
United States Patent and Trademark Office
P.O. Box 1450
Alexandria, VA 22313-1450
www.uspto.gov

**IMMUNEX CORPORATION**
**LAW DEPARTMENT**
**1201 AMGEN COURT WEST**
**SEATTLE WA 98119**

**COPY MAILED**

JUL 0 7 2006

**OFFICE OF PETITIONS**

| | | |
|---|---|---|
| In re Application of | : | |
| Baum et al. | : | |
| Application No. 10/622,237 | : | ON PETITION |
| Filed: July 17, 2003 | : | |
| Attorney Docket No. 2873-USA | : | |

This is a decision on the petition under 37 C.F.R. § 1.137(b), filed April 14, 2006, to revive the above-identified application.

The petition is **GRANTED.**

The petition satisfies the conditions for revival pursuant to the provisions of 37 CFR 1.137(b) in that (1) the reply in the form of a Notice of Appeal and an Amendment; (2) the petition fee; and (3) the required statement of unintentional delay have been received. Accordingly, the response has been accepted as having been unintentionally delayed.

**The Notice of Appeal filed April 14, 2006, has been entered and made of record. Accordingly, the 2-month period for filing the appeal brief accompanied by the fee required by law, runs from the date of this decision.**

This matter is being referred to Technology Center 1600 for further processing.

Telephone inquiries regarding this decision should be directed to the undersigned at (571) 272-3282.

Liana Chase
Petitions Examiner
Office of Petitions

UNITED STATES PATENT AND TRADEMARK OFFICE

Commissioner for Patents
United States Patent and Trademark Office
P.O. Box 1450
Alexandria, VA 22313-1450
www.uspto.gov

LEE & HAYES PLLC
421 W RIVERSIDE AVENUE
SUITE 500
SPOKANE, WA 99201

**MAILED**

DEC 14 2005

**Technology Center 2100**

In re Application of:
KENT D. CEDOLA
Application Serial No.: 10/622,255
Filed: July 18, 2003
For: **RENAMING OF VIRTUAL COMMUNICATION PORT FOR IR DEVICES**

DECISION ON PETITION *under 37 CFR 1.102*

This is a decision on the petition, filed on November 7, 2005 under MPEP 708.01(I), requesting an expedited action on the merits. This petition has been considered as a request to affirm that this application is under "special" status in accordance with 37 CFR 1.102.

This application is a continuation of SN 09/507,479 filed February 17, 2000.

708.01 [R-2] List of Special Cases, states in part:
(I) Applications pending more than 5 years, ***including those which, by relation to a prior United States application, have an effective pendency of more than 5 years***. See MPEP § 707.02. [emphasis added]

In accordance with MPEP section 708.01(I), applications pending over 5 years, including those which by relation to a prior United States application, should be considered special. This application by virtue of its prolonged pendency is considered special in accordance with PTO policy.

Accordingly, the petition is **Granted**.

The examiner will be notified that this application should be considered as "special" and appropriate for expedited action. If the application is subsequently allowed, it will be given priority for printing. See M.P.E.P. §1309.

Brian L. Johnson
Special Program Examiner
Technology Center 2100
Computer Architecture, Software, and Information Security

# UNITED STATES PATENT AND TRADEMARK OFFICE

UNITED STATES DEPARTMENT OF COMMERCE
United States Patent and Trademark Office
Address: COMMISSIONER FOR PATENTS
P.O. Box 1450
Alexandria, Virginia 22313-1450
www.uspto.gov

| APPLICATION NO. | FILING DATE | FIRST NAMED INVENTOR | ATTORNEY DOCKET NO. | CONFIRMATION NO. |
|---|---|---|---|---|
| 10/622,259 | 07/18/2003 | Steven Michael Hausman | 2002P20760US01 | 3269 |

7590 04/09/2008
Siemens Corporation
Intellectual Property Department
170 Wood Avenue South
Iselin, NJ 08830

| EXAMINER |
|---|
| HASSAN, AURANGZEB |

| ART UNIT | PAPER NUMBER |
|---|---|
| 2182 | |

| MAIL DATE | DELIVERY MODE |
|---|---|
| 04/09/2008 | PAPER |

**Please find below and/or attached an Office communication concerning this application or proceeding.**

The time period for reply, if any, is set in the attached communication.

UNITED STATES PATENT AND TRADEMARK OFFICE

Commissioner for Patents
United States Patent and Trademark Office
P.O. Box 1450
Alexandria, VA 22313-1450
www.uspto.gov

MAILED

APR 09 2008

TECHNOLOGY CENTER 2100

Siemens Corporation
Intellectual Property Department
170 Wood Avenue South
Iselin NJ 08830

In re Application of: Hausman, et al.
Application No. 10/622,259
Filed: July 18, 2003
For: AUTOMATIC CONFIGURATION OF A REMOTE MODEM

**DECISION ON PETITION UNDER 37 C.F.R. § 1.181**

This is a decision on the petition, filed 19 December 2007, and a second petition filed February 20, 2008, under 37 CFR § 1.181 to reconsider and reverse the examiner's Final rejection mailed 19 October 2007, as being premature.

The petition is **DISMISSED**.

On 19 December 2007, applicant's counsel filed a petition to the Director under 37 CFR § 1.181 to seek relief from actions of the examiner Aurangzeb Hassan in relation to the Final Office action mailed 19 October 2007. In the petition, applicant's counsel alleged that the rejection of claims 1-32 was not clear, and specifically, pointed out that it was not clear which of the two cited references disclosed some specific limitations of claim 1. Applicant also alleges that examiner failed to respond to all Applicants' arguments; thus, rendering the Final Office action premature.

MPEP § 1201 states, in part:

> The United States Patent and Trademark Office (Office) in administering the Patent Laws makes many decisions of a *>substantive< nature which the applicant may feel deny him or her the patent protection to which he or she is entitled. The differences of opinion on such matters can be justly resolved only by prescribing and following judicial procedures. **Where the differences of opinion concern the denial of patent claims because of prior art or **>other patentability issues<, the questions thereby raised are said to relate to the merits,** and appeal procedure within the Office and to the courts has long been provided by statute >(35 U.S.C. 134)<.
>
> The line of demarcation between appealable matters for the Board of Patent Appeals and Interferences (Board) and petitionable matters for the **>Director of the U.S. Patent and Trademark Office (Director)< should be carefully observed. The Board will not ordinarily hear a question **>that< should be decided by the *>Director on petition<, and the *>Director< will not ordinarily entertain a petition where the question presented is **>a matter appealable to the Board<. However, since 37 CFR 1.181(f) states that any petition not filed within 2 months from the action complained of may be dismissed as untimely and

since 37 CFR 1.144 states that petitions from restriction requirements must be filed no later than appeal, petitionable matters will rarely be present in a case by the time it is before the Board for a decision. In re Watkinson, 900 F.2d 230, 14 USPQ2d 1407 (Fed. Cir. 1990).

MPEP 707.07(f) [R-3] states in part:

> Where the applicant traverses any rejection, the examiner should, if he or she repeats the rejection, take note of the applicant's argument and answer the substance of it.
> .....
> The importance of answering applicant's arguments is illustrated by In re Herrmann, 261 F.2d 598, 120 USPQ 182 (CCPA 1958) where the applicant urged that the subject matter claimed produced new and useful results. The court noted that since applicant's statement of advantages was not questioned by the examiner or the Board of Appeals, it was constrained to accept the statement at face value and therefore found certain claims to be allowable. See also In re Soni, 54 F.3d 746, 751, 34 USPQ2d 1684, 1688 (Fed. Cir. 1995) (Office failed to rebut applicant's argument).

37 C.F.R. § 1.181(f) states, in part:

> The mere filing of a petition will not stay any period for reply that may be running against the application, nor act as a stay of other proceedings. Any petition ...

A review of the prosecution history in the instant application and the petition indicates that there is a disagreement between the examiner and applicant's counsel in the interpretation of the claim language and prior art, and whether all of applicants' arguments were addressed by the examiner. All claims have been rejected under 35 U.S.C. §§ 103(a). Thus, it is apparent that such a disagreement regarding claim interpretation and rejection is appealable, not a petitionable matter.

Pursuant to MPEP § 1201, the petition is **DISMISSED.**

A petition under 37 C.F.R. 1.181 requires no fee. The application file is being forwarded to the Tech Support staff to refund the fee of $130.00, that was charged to petitioner on December 20, 2007.

From there, the application will be forwarded to the examiner to act on the After Final Amendment filed by Applicant on December 19, 2007.

Any inquiry concerning this decision should be directed to Mano Padmanabhan whose telephone number is (571) 272-4210.

Jack Harvey

Jack Harvey, Director
Technology Center 2100
Computer Architecture, Software, and Information Security

UNITED STATES PATENT AND TRADEMARK OFFICE

UNITED STATES DEPARTMENT OF COMMERCE
United States Patent and Trademark Office
Address: COMMISSIONER FOR PATENTS
P.O. Box 1450
Alexandria, Virginia 22313-1450
www.uspto.gov

| APPLICATION NO. | FILING DATE | FIRST NAMED INVENTOR | ATTORNEY DOCKET NO. | CONFIRMATION NO. |
|---|---|---|---|---|
| 10/622,259 | 07/18/2003 | Steven Michael Hausman | 2002P20760US01 | 3269 |

7590 05/02/2008
Siemens Corporation
Intellectual Property Department
170 Wood Avenue South
Iselin, NJ 08830

| EXAMINER |
|---|
| HASSAN, AURANGZEB |

| ART UNIT | PAPER NUMBER |
|---|---|
| 2182 | |

| MAIL DATE | DELIVERY MODE |
|---|---|
| 05/02/2008 | PAPER |

**Please find below and/or attached an Office communication concerning this application or proceeding.**

The time period for reply, if any, is set in the attached communication.

UNITED STATES PATENT AND TRADEMARK OFFICE

Commissioner for Patents
United States Patent and Trademark Office
P.O. Box 1450
Alexandria, VA 22313-1450
www.uspto.gov

MAILED

MAY 02 2008

TECHNOLOGY CENTER 2100

Siemens Corporation
Intellectual Property Department
170 Wood Avenue South
Iselin NJ 08830

In re Application of: Hausman, et al.
Application No. 10/622,259
Filed: July 18, 2003
For: AUTOMATIC CONFIGURATION OF A REMOTE MODEM

**DECISION ON PETITION UNDER 37 C.F.R. § 1.181**

This is a decision on the petition, filed March 7, 2008, under 37 CFR § 1.181 to review the implicit decision of the Technology Center Director to "deny by ignoring" or "refuse to act on" Applicant's previous petition to withdraw the finality of the Office Action dated 19 October 2007 due to that Office Action's failure to address the substance of Applicant's arguments traversing the rejection of claims 1-32.

The petition is **DISMISSED**.

On March 7, 2008, applicant's counsel filed a petition to the Director under 37 CFR § 1.181 to seek relief from actions of the examiner Aurangzeb Hassan in relation to the Final Office action mailed 19 October 2007, stating that

> 1. Delays in the USPTO's prompt withdrawal of the finality of the 19 October 2007 Office Action unreasonably and unfairly fall on Applicant in the form of extension fees and fees for a Request for Continued Examination or Notice of Appeal, as well as loss of an opportunity to refute the improperly final grounds of rejection.
>
> 2. Even if the Petition to Withdraw Finality were promptly denied, delays in the USPTO's prompt issuance of an Advisory Action unreasonably and unfairly fall on Applicant in the form of extension fees.
>
> 3. Thus, given that the USPTO has had more than sufficient time to withdraw the finality of the 19 October 2007 Office Action and/or to issue an Advisory Action responsive to the 19 December 2007 Reply, Applicant respectfully interprets these delays as an implicit refusal to act on the part of the Technology Center Director.

## Relief Requested

Appellant requested that:
1. Implicit refusal to act on the part of the Technology Center Director be reviewed by the Director of the USPTO or his proper delegate.

2. Act on the petition filed on 19 December 2007, requesting that the finality of the 19 October 2007 Office Action be promptly withdrawn.

3. If the 19 December 2007 Petition is denied, an Advisory Action responsive to the 19 December 2007 Reply, be promptly issued.

## DECISION

37 CFR § 1.181(f) states that:

> ...
> (f) The mere filing of a petition will not stay any period for reply that may be running against the application, nor act as a stay of other proceedings. Any petition under this part not filed within two months of the mailing date of the action or notice from which relief is requested may be dismissed as untimely, except as otherwise provided. This two-month period is not extendable.

MPEP § 1002.02(c) states that:

> Petitions and Requests Decided by the Technology Center Directors
> ...
>
> 3. Petitions invoking the supervisory authority of the *>Director of the USPTO< under 37 CFR 1.181 involving any ex parte action or requirement in a patent application by the examiner which is not subject to appeal (37 CFR 1.191) and not otherwise provided for, as for example:
> (a) prematureness of final rejection, MPEP § 706.07(c);

37 CFR § 1.181(f) states that the mere filing of a petition will not stay any period for reply that may be running against the application, and MPEP § 1002.02(c) states that petitions regarding prematureness of a final rejection by examiner in patent applications, should be decided by Technology Center Directors. Thus, the Decision on Petition mailed on April 11, 2008 and signed by Technology Center Director, Jack Harvey, is the final holding on the petitions, filed December 19, 2007 and February 20, 2008. The shortened statutory time period set forth in the Final office action is continued to run from the mailing date of October 19, 2007.

The Office delay in not deciding the petition of December 19, 2007 until the mailing of decision on April 11, 2008, is regretted. While the Office attempts to promptly respond to a petition, there are those instances where delays do occur, as in the instant application. However, the rule (37 CFR § 1.181(f)) clearly indicates that the mere filing of a petition does not relieve petitioners of the duty of taking appropriate action to save the application from abandonment. Therefore, whether petitioner received a Decision on Petition, in this, or in any other finally rejected application, or not, prior to the expiration of a statutory or regulatory period, the only right to

which petitioner was entitled was that of appealing the final rejection or by filing a continuing application. Applicant has received the relief requested in that the petition decision on the petitions filed December 19, 2007 and February 20, 2008 to withdraw the finality of the office action mailed October 19, 2007, was mailed on April 11, 2008; and an advisory action was mailed in the instant application was mailed on April 11, 2008.

Accordingly, the petition is **DISMISSED**.

A petition under 37 C.F.R. 1.181 requires no fee. The application file is being forwarded to the Tech Support staff to refund the fee of $130.00, that was charged to petitioner on March 7, 2008.

Any inquiry concerning this decision should be directed to Mano Padmanabhan whose telephone number is (571) 272-4210.

Jack Harvey, Director
Technology Center 2100
Computer Architecture, Software, and
Information Security

UNITED STATES PATENT AND TRADEMARK OFFICE

Commissioner for Patents
United States Patent and Trademark Office
P.O. Box 1450
Alexandria, VA 22313-1450
www.uspto.gov

**FISH & RICHARDSON, P.C.**
**PO BOX 1022**
**MINNEAPOLIS, MN 55440-1022**

COPY MAILED

MAY 2 6 2005

OFFICE OF PETITIONS

In re Application of :
Yuh-Cherng Wu et al :
Application No. 10/622,265 :
Filed: July 17, 2003 :
Attorney Docket No. 13906-089001/2003P00388 :

ON PETITION

This is a decision on the petition, filed May 25, 2005, which is being treated under 37 CFR 1.313 (c)(2), to withdraw the above-identified application from issue after payment of the issue fee.

The petition is **GRANTED**.

The above-identified application is withdrawn from issue for consideration of a submission under 37 CFR 1.114 (request for continued examination). See 37 CFR 1.313(c)(2).

**Petitioner is advised that the issue fee paid on April 21, 2005 in the above-identified application cannot be refunded. If, however, the above-identified application is again allowed, petitioner may request that it be applied towards the issue fee required by the new Notice of Allowance.** [1]

The file does not indicate a change of address has been submitted, although the address given on the petition differs from the address of record. If appropriate, a change of address should be filed in accordance with MPEP 601.03. A courtesy copy of this decision is being mailed to the address given on the petition; however, the Office will mail all future correspondence solely to the address of record.

---

[1] The request to apply the issue fee to the new Notice may be satisfied by completing and returning the new Issue Fee Transmittal Form PTOL-85(b), which includes the following language thereon: "Commissioner for Patents is requested to apply the Issue Fee and Publication Fee (if any) or re-apply any previously paid issue fee to the application identified above." Petitioner is advised that, whether a fee is indicated as being due or not, the Issue Fee Transmittal Form **must** be completed and timely submitted to avoid abandonment. Note the language in bold text on the first page of the Notice of Allowance and Fee(s) Due (PTOL-85).

Telephone inquiries should be directed to Wan Laymon at (571) 272-3220.

This matter is being referred to Technology Center AU 2125 for processing of the request for continued examination under 37 CFR 1.114 and for consideration of the concurrently filed IDS.

Wan Laymon

Wan Laymon
Petitions Examiner
Office of Petitions
Office of the Deputy Commissioner
for Patent Examination Policy

cc: FISH & RICHARDSON P.C., P.A.
60 SOUTH SIXTH STREET
SUITE 3300
MINNEAPOLIS, MN 55402

UNITED STATES PATENT AND TRADEMARK OFFICE

Commissioner for Patents
United States Patent and Trademark Office
P.O. Box 1450
Alexandria, VA 22313-1450
www.uspto.gov

ROZSA & CHEN LLP
15910 VENTURA BOULEVARD
SUITE 1601
ENCINO, CA 91436-2815

COPY MAILED

SEP 13 2004

OFFICE OF PETITIONS

In re Application of :
Ellis :
Application No. 10/622,267 : ON PETITION
Filed: May 14, 2004 :
Attorney Docket No. 36070.010 :

This decision concerns the May 14, 2004 petition which, in effect, requests withdrawal of a "Notice of Incomplete Nonprovisional Application" mailed on May 11, 2004 for the above-referenced application ("5/11/04 Notice").

The petition is **DISMISSED.**

The application was deposited on July 17, 2003. As indicated in the 5/11/04 Notice, the application was deposited without drawings and thus was not accorded a filing date. The petition then followed wherein Petitioner contends that 2 sheets of drawings containing Figures 1-9 were filed with the other application papers on May 14, 2004. It is noted that the specification deposited on July 17, 2003 describes drawings of Figures 1-9, but the USPTO file for this application does not include any drawing.

Where, as in here, there is a question regarding whether a document was received by the Office, the Office will rely on its official records, i.e., the contents of the pertinent application file, absent convincing evidence such as a properly completed postcard receipt suggesting that the Office has received and subsequently misplaced that document which is not contained in the Office file for this application.[1] A postcard receipt which itemizes and properly identifies the papers being filed **would** serve as *prima facie* evidence of receipt in the USPTO of all the items listed thereon on the date stamped thereon by the USPTO.[2] The petition does not enclose a copy of such a postcard to support the requested filing date.

---

1 See MPEP section 513 (Rev. 2, May 2004).

2 MPEP section 503 (Rev. 2, May 2004).

The petition is, on the other hand, accompanied by counsel's declaration, stating in essence that counsel had examined the entire application, which included 2 sheets of drawings containing Figures 1-9, before it was deposited in the envelope to be mailed. This evidence has been considered, but is not persuasive. The declaration contains the declarant's recall of routine events which occurred 10 months earlier and is not more persuasive than the record of what was filed as shown by the official file.

The Office further notes that an application including at least one method or process claim but deposited without any of the drawings described in the specification may nonetheless be entitled to a filing date.[3] Unfortunately, the instant application does not include any method or process claim.

In view of the above, the application is not entitled to the requested filing date of July 17, 2003. The 5/11/04 Notice was properly mailed and will not be withdrawn. The petition is thus **dismissed**.

**The application is hereby accorded a filing date of May 14, 2004, the day on which drawings of Figures 1-9 were filed.**

Finally, the Office acknowledges receipt with the petition of the $130 petition fee.

The application is being returned to the Office of Initial Patent Examination for further processing with a filing date of May 14, 2004, using the 2 sheets of drawings (Figures 1-9) filed on that date.

Telephone inquiries should be directed to Petitions Attorney RC Tang at (703) 308-0763 (before September 15, 2004), or to the undersigned at (703) 306-5683 (before September 27, 2004) or (571) 272-3203 (after September 27, 2004).

Charles Steven Brantley
Senior Petitions Attorney
Office of Petitions

---

[3] MPEP 601.01(f) (Rev. 2, May 2004)

UNITED STATES PATENT AND TRADEMARK OFFICE

Commissioner for Patents
United States Patent and Trademark Office
P.O. Box 1450
Alexandria, VA 22313-1450
www.uspto.gov

ROZSA & CHEN
15910 VENTURA BOULEVARD
SUITE 1601
ENCINO, CA 91436

**COPY MAILED**

FEB 09 2005

**OFFICE OF PETITIONS**

In re Application of
Ellis
Application No. 10/622,267
Filed: July 17, 2003
Attorney Docket No. 36070.010

ON PETITION

This is a decision on the renewed petition filed September 21, 2004, to accord the above-identified application a filing date of July 17, 2003.

On May 11, 2004, the Office of Initial Patent Examination mailed a Notice stating that drawings were not present and that a filing date had not been accorded and the filing date would be the date of receipt of drawings. A petition was filed on May 14, 2004. A decision dismissing the petition was mailed on September 13, 2004.

The present petition alleges drawings were deposited on July 17, 2003. In support, petitioner has submitted a postcard receipt which acknowledges receipt of "2 sheets of drawings - 3 copies" on July 17, 2003.[1]

Upon review of the record, the drawings deposited on July 17, 2003, have not been located. However, the evidence is convincing that the application papers deposited on July 17, 2003, included drawings, and that the drawings were subsequently misplaced in the PTO. Therefore, the application is complete and entitled to a filing date of July 17, 2003.

In view of the above, the petition is **granted**. The copy of the drawings submitted on May 14, 2004, will be used for examination purposes.

The Notice mailed May 11, 2004, was sent in error and is hereby vacated.

The Office of Initial Patent Examination will be informed of the instant decision and will further process the application using a filing date of July 17, 2003, and using the application papers filed on July 17, 2003, and the copy of the drawings filed with the petition on May 14, 2004.

Telephone inquiries should be directed to Petitions Attorney Steven Brantley at (571) 272-3203.

Charles Steven Brantley
Senior Petitions Attorney
Office of Petitions

---

[1] Evidence of receipt of any correspondence filed in the Patent and Trademark Office can be obtained by submitting a self addressed post card properly itemizing and identifying the paper or papers being filed. Upon receipt of the correspondence, the Patent and Trademark Office will check the listing on the post card against the papers submitted, making sure that all items listed are present and will then stamp the postcard with an Official date stamp and place the post card in the outgoing mail. "A post card receipt which itemizes and properly identifies the papers which are being filed serves as *prima facie* evidence of receipt in the PTO of all items listed thereon by the PTO." M.P.E.P. § 503.

UNITED STATES PATENT AND TRADEMARK OFFICE

Commissioner for Patents
United States Patent and Trademark Office
P.O. Box 1450
Alexandria, VA 22313-1450
www.uspto.gov

CHARLES E. LYKES, JR. ESQ
SUITE 101
501 S. FT. HARRISON AVENUE
CLEARWATER, FL 33756-5317

**COPY MAILED**

APR 2 5 2006

**OFFICE OF PETITIONS**

ON PETITION

In re Application of
Robert Goetze
Application No. 10/622,270
Filed: July 18, 2003
Attorney Docket No. 02037IP

This is a decision on the petition filed February 3, 2005, under 37 CFR 1.103 for enlargement of time for response to action dated July 29, 2004, which is treated as a petition to withdraw the holding of abandonment, under 37 CFR 1.181.

The petition is DISMISSED.

Any request for reconsideration of this decision must be submitted within **TWO (2) MONTHS** from the mail date of this decision. Extensions of time under 37 CFR 1.136(a) are permitted. The reconsideration request should include a cover letter entitled "Renewed Petition under 37 CFR 1.181," or, as explained in more detail below, "...under 37 CFR 1.137(a)" or (b). This is not a final agency decision.

A non-Final Office Action was mailed July 28, 2004 which set a three month shortened statutory period for reply. No response having been timely filed and no extensions of time having been filed by January 28, 2005, this application became abandoned October 29, 2004. The instant petition and this decision precede the mailing of the Notice of Abandonment.

Petitioner contends that due to military service during the periods December 1, 2003 to November 15, 2004, he was unable to file a timely response to the non-Final Office Action mailed July 28, 2004. Instead of an extension of time however, petitioner filed a petition to enlarge the time for response. Petitioner is advised that a more appropriate response should have been a petition to suspend actions on this matter, prior to mobilization not after petitioner returned from active duty service.

Because an extension of time was not filed prior to the end of the period set out in 37 CFR 1.136, this application became abandoned.

Furthermore, the laws cited, Service Members' Relief Act and the Veteran's

Reemployment Rights Act, are laws that preserve civil obligations that are personal in nature to the service member and are not identical to the situation petitioner presents. Petitioner was both a service member and a self employed attorney however, the protections provided in the two cited laws were never intended to relieve the private attorney from service to his client or the filing of response due.

Petitioner had an obligation to either transfer cases he may have been working on prior to mobilization to other counsel or to have petitioned for an enlargement of time or suspension of the application prior to the date a response would have become due.

As for the response filed February 3, 2005, the petition notes a certificate of mail date of January 31, 2005. Had the response/petition been filed January 28, 2005, perhaps the response/petition could have been treated as a request for a three month extension of time.[1]

While this matter was inappropriately filed under 37 CFR 1.103 and while petitioner has not satisfied the requirements under 37 CFR 1.181, this application will remain in an abandoned status.

Petitioner may wish to file a petition to revive under 37 CFR 1.137(a) or (b). Section 1.137(b) now provides that where the delay in reply was unintentional, a petition may be filed to revive an abandoned application or a lapsed patent pursuant to 37 CFR 1.137(b). A grantable petition pursuant to 37 CFR 1.137(b) must be accompanied by:

> (1) the required reply, unless previously filed. In a nonprovisional application abandoned for failure to prosecute, the required reply may be met by the filing of a continuing application. In an application or patent, abandoned or lapsed for failure to pay the issue fee or any portion thereof, the required reply must be the payment of the issue fee or any outstanding balance thereof;
>
> (2) the petition fee as set forth in 37 CFR 1.17(m) ($675.00);
>
> (3) a statement that the entire delay in filing the required reply from the due date for the reply until the filing of a grantable petition pursuant to 37 CFR 1.137(b) was unintentional. The Commissioner may required additional information where there is a question whether the delay was unintentional; and
>
> (4) any terminal disclaimer (and fee as set forth in 37 CFR 1.20(d)) required pursuant to 37 CFR 1.137(c)).

---

[1]Pursuant to 37 CFR 1.136, an extension of time must be filed prior to the expiration of the maximum period obtainable for reply to avoid abandonment.

The filing of a petition under the unintentional standard cannot be intentionally delayed and therefore should be filed promptly. A person seeking revival due to unintentional delay cannot make a statement that the delay was unintentional unless the entire delay, including the delay from the date it was discovered that the application was abandoned until the filing of the petition to revive under 37 CFR 1.137(b), was unintentional. A statement that the delay was unintentional is not appropriate if petitioner intentionally delayed the filing of a petition for revival under 37 CFR 1.137(b).

Further correspondence with respect to this matter should be addressed as follows:

By mail: Mail Stop Petition
Commissioner for Patents
P.O. Box 1450
Alexandria, VA 22313-1450

By FAX: (571) 273-8300

Telephone inquiries concerning this matter may be directed to the undersigned Petitions Attorney at (571) 272-3212.

Patricia Faison-Ball

Patricia Faison-Ball
Senior Petitions Attorney
Office of Petitions

UNITED STATES PATENT AND TRADEMARK OFFICE

Commissioner for Patents
United States Patent and Trademark Office
P.O. Box 1450
Alexandria, VA 22313-1450
www.uspto.gov

CHARLES E. LYKES, JR. ESQ.
SUITE 101
501 S. FT. HARRISON AVE.
CLEARWATER FL 33756-5317

COPY MAILED

AUG 17 2006

OFFICE OF PETITIONS

In re Application of :
Robert Goetze :
Application No. 10/622,270 : DECISION ON PETITION
Filed: July 18, 2003 :
Attorney Docket No: 02037IP :

This is a decision on the petition under 37 CFR 1.137(b)[1], filed June 30, 2006, to revive the above-identified application.

The petition is **DISMISSED**.

Any request for reconsideration of this decision must be submitted within TWO (2) MONTHS from the mail date of this decision. Extensions of time under 37 CFR 1.136(a) are permitted. The reconsideration request should include a cover letter entitled "Renewed Petition under 37 CFR 1.137(b)." This is not a final agency decision.

This application became abandoned on October 29, 2004, for failure to file a timely response to the non-Final Office Action mailed July 28, 2004, which set a three (3) month period for reply. The instant petition and this decision precede the mailing of the Notice of Abandonment.

---

[1]Effective December 1, 1997, the provisions of 37 CFR 1.137(b) now provide that where the delay in reply was unintentional, a petition may be filed to revive an abandoned application or a lapsed patent pursuant to 37 CFR 1.137(b). A grantable petition filed under the provisions of 37 CFR 1.137(b) must be accompanied by:

(1) the required reply, unless previously filed. In a nonprovisional application abandoned for failure to prosecute, the required reply may be met by the filing of a continuing application. In an application or patent, abandoned or lapsed for failure to pay the issue fee or any portion thereof, the required reply must be the payment of the issue fee or any outstanding balance thereof.

(2) the petition fee as set forth in 37 CFR 1.17(m);

(3) a statement that the entire delay in filing the required reply from the due date for the reply until the filing of a grantable petition pursuant to 37 CFR 1.137(b) was unintentional. The Commissioner may required additional information where there is a question whether the delay was unintentional; and

(4) any terminal disclaimer (and fee as set forth in 37 CFR 1.20(d)) required pursuant to 37 CFR 1.137(c)).

A petition filed February 3, 2005 under 37 CFR 1.181 was dismissed in a decision mailed April 25, 2006. That decision advised petitioner of the option to file a petition under the unintentional standard. However, the decision on petition misquoted the amount of fees due. Effective December 8, 2004, the fees for a petition under 37 CFR 1.137(b) were set at $750.00 for a small entity and $1500.00 for a large entity. The fees in the amount of $675.00 submitted with the instant petition are therefore insufficient. Since no authorizations for debiting a deposit account for any deficiencies have been granted, the petition fee has not been paid. Additional petition fees are required for revival. Petitioner should also, prior to submission, check the Code of Federal Regulations to ensure that no additional increases have been implemented.

Further correspondence with respect to this matter should be addressed as follows:

By mail: Mail Stop Petitions
Commissioner for Patents
P.O. Box 1450
Alexandria VA 22313-1450

By FAX: (571) 273-8300
Attn: Office of Petitions

Telephone inquiries concerning this matter may be directed to the undersigned Petitions Attorney at (571) 272-3212.

Patricia Faison-Ball

Patricia Faison-Ball
Senior Petitions Attorney
Office of Petitions

UNITED STATES PATENT AND TRADEMARK OFFICE

Commissioner for Patents
United States Patent and Trademark Office
P.O. Box 1450
Alexandria, VA 22313-1450
www.uspto.gov

KLARQUIST SPARKMAN LLP
121 S.W. SALMON STREET
SUITE 1600
PORTLAND OR 97204

COPY MAILED
AUG 15 2008

| | | |
|---|---|---|
| In re Application of | : | |
| Hsu et al. | : | |
| Application No.: 10/622284 | : | DECISION ON |
| Filing or 371(c) Date: 07/18/2003 | : | PETITION |
| Attorney Docket Number: 3382-66128-01 | : | |

This is a decision in response to the Petition to Accept Unavoidably Delayed Payment of issue and Publication Fees (Alternatively to Accept Unintentionally Delayed Payment of Issue and Publication Fees)," filed June 16, 2008. The petition is properly treated under 37 CFR 1.137(a).

This Petition under 37 CFR 1.137(a) is hereby **granted**[1].

The above-identified application became abandoned for failure to timely and properly reply to the Notice of Allowance and Issue Fee Due, mailed December 27, 2007. The Notice set a non-extendable three (3) month period for reply. No reply having been received, the application became abandoned on March 28, 2008. A Notice of Abandonment was mailed July 7, 2008.

The petition satisfies the requirements of 37 CFR 1.137(a) in that petitioner has supplied (1) the required reply in the form of the issue and publication fees; (2) the petition fee; and (3) a showing to the satisfaction of the Director that the entire delay was unavoidable.

The application will be referred to the Office of Data Management for processing into a patent in the normal course of business.

Telephone inquiries concerning this matter should be directed to the undersigned at (571) 272-3232.

/Derek L. Woods/
Derek L. Woods
Attorney
Office of Petitions

[1] In view of the grant of the petition under 37 CFR 1.137(a), the petition under 37 CFR 1/137(b) (to accept unintentionally delayed payment of the issue and publication fees) is unnecessary.

UNITED STATES PATENT AND TRADEMARK OFFICE

Commissioner for Patents
United States Patent and Trademark Office
P.O. Box 1450
Alexandria, VA 22313-1450
www.uspto.gov

PERMAN & GREEN
425 POST ROAD
FAIRFIELD, CT 06824

COPY MAILED
MAY 26 2004
OFFICE OF PETITIONS

In re Application of :
David Chown :
Application No. 10/622,294 : DECISION GRANTING PETITION
Filed: July 18, 2003 : UNDER 37 CFR 1.47(b)
For: TRANSMISSION OF SUPERVISORY :
DATA IN AN OPTICAL COMMUNICATION :
SYSTEM

This is in response to the petition under 37 CFR 1.47(b), filed September 8, 2003.

The petition is granted.

Petitioner has shown that the non-signing inventor has refused to join in the filing of the above-identified application after having been presented with the application papers. Specifically, the statement of facts of Dr. James Lenney establishes that the inventor was mailed the application papers, including the specification, claims and drawings, but failed to respond to the request that he sign the declaration. In addition, petitioner has shown that Agilent Technologies UK Limited (Agilent) has a proprietary interest in the above-identified application with the copy of the "Employment Confidentiality Agreement" and "Invention Proposal," showing that the inventor had an obligation to assign any patent rights to Agilent. The petition fee has been paid. Lastly, petitioner has submitted a declaration in compliance with 37 CFR 1.63 and 1.64 and demonstrated that petitioner has shown that such action is necessary to prevent irreparable damage.

This application and papers have been reviewed and found in compliance with 37 CFR 1.47(b). This application is hereby accorded Rule 1.47(b) status.

As provided in Rule 1.47(b), this Office will forward notice of this application's filing to the non-signing inventor at the address given in the Declaration. Notice of the filing of this application will also be published in the Official Gazette.

The application will be forwarded to the Office of Initial Patent Examination for further processing.

BEST AVAILABLE COPY

Telephone inquiries regarding this communication should be directed to the undersigned at (703)306-9200

Edward J. Tannouse
Petitions Attorney
Office of Petitions
United States Patent and Trademark Office

BEST AVAILABLE COPY

UNITED STATES PATENT AND TRADEMARK OFFICE

Commissioner for Patents
United States Patent and Trademark Office
P.O. Box 1450
Alexandria, VA 22313-1450
www.uspto.gov

DAVID CHOWN
9 CASTLE LANE
HADLEIGH, IPSWICH, SUFFOLK IP7 6DE
UNITED KINGDOM

COPY MAILED
MAY 2 6 2004
OFFICE OF PETITIONS

In re Application of
David Chown
Application No. 10/622,294
Filed: July 18, 2003
For: TRANSMISSION OF SUPERVISORY DATA IN AN OPTICAL COMMUNICATION SYSTEM

Dear DAVID CHOWN:

You are named as the sole inventor in the above identified United States patent application, filed under the provisions of 35 U.S.C. 118 (United States Code), and 37 CFR 1.47(b), Rules of Practice in Patent Cases. Should a patent be granted on the application you will be designated therein as the sole inventor.

As a named inventor you are entitled to inspect any paper in the file wrapper of the application, order copies of all or any part thereof (at a prepaid cost per 37 CFR 1.19) or make your position of record in the application. Alternatively, you may arrange to do any of the preceding through a registered patent attorney or agent presenting written authorization from you. If you care to join the application, counsel of record (see below) would presumably assist you. Joining in the application would entail the filing of an appropriate oath or declaration by you pursuant to 37 CFR 1.63.

Telephone inquiries regarding this communication should be directed to the undersigned at (703)306-9200. Requests for information regarding your application should be directed to the File Information Unit at (703)308-2733. Information regarding how to pay for and order a copy of the application, or a specific paper in the application, should be directed to Certification Division at (703)308-9726 or 1(800)972-6382 (outside the Washington D.C. area).

Edward J. Tannouse
Petitions Attorney
Office of Petitions
United States Patent and Trademark Office

PERMAN & GREEN
425 POST ROAD
FAIRFIELD, CT 06824

BEST AVAILABLE COPY

SPE: D. Lee

## SPE RESPONSE FOR CERTIFICATE OF CORRECTION

Paper No.: _____

DATE : 8/24/06

TO SPE OF : ART UNIT 2851

SUBJECT : Request for Certificate of Correction for Appl. No.: 10/622,296 Patent No.: 7059728

Please respond to this request for a certificate of correction within 7 days.

Please review the requested changes/corrections as shown in the **COCIN** document(s) in the IFW application image. No new matter should be introduced, nor should the scope or meaning of the claims be changed.

Please complete the response (see below) and forward the completed response to scanning using document code **COCX**.


**Lamonte M. Newsome**
**Certificates of Correction Branch**
**703-308-9390 ext. 112**


**Thank You For Your Assistance**

**The request for issuing the above-identified correction(s) is hereby:**
Note your decision on the appropriate box.

- ☑ **Approved** — All changes apply.
- ☐ **Approved in Part** — Specify below which changes **do not** apply.
- ☐ **Denied** — State the reasons for denial below.

**Comments:** Approved

DIANE LEE
SUPERVISORY PATENT EXAMINER

Diane Lee — 2851

**SPE** — **Art Unit**

UNITED STATES PATENT AND TRADEMARK OFFICE

COMMISSIONER FOR PATENTS
UNITED STATES PATENT AND TRADEMARK OFFICE
P.O. BOX 1450
ALEXANDRIA, VA 22313-1450
www.uspto.gov

Paper No.

Jeffrey Brill
FENWICK & WEST LLP
Silicon Valley Center
801 California Street
Mountain View, CA 94041

In re Application of:
Wolfgang S. Hammersmith
Application No. 10/622,338
Filed: July 18, 2003
For: CRYPTOGRAPHIC KEY DISTRIBUTION USING KEY FOLDING

MAILED

JAN 27 2005

Technology Center 2100

DECISION ON REQUEST TO WITHDRAW AS ATTORNEY OR AGENT

This is a decision on the Request To Withdraw from Representation filed June 07, 2004.

A grantable request to withdraw as attorney of record should indicate thereon the present mailing addresses of the attorney(s) who is/are withdrawing from the record and of the applicant. The request for withdrawal must be signed by every attorney seeking to withdraw or contain a clear indication that one attorney is signing on behalf of another/others. A request to withdraw will not be approved unless at least 30 (thirty) days would remain between the date of approval and the later of the expiration date of a time to file a response or the expiration date of the maximum time period which can be extended under 37 C.F.R. § 1. 136(a). The effective date of withdrawal being the date of decision and not the date of request. See M.P.E.P. § 402.06. 37 C.F.R. § 1.36 further requires that the applicant or patent owner be notified of the withdrawal of the attorney or agent.

The request filed June 07, 2004 meets all the requirements. Accordingly the request is **GRANTED**.

All future communications from the Office will be directed to the below-listed address until otherwise notified by applicant. This correspondence address is provided by the withdrawn attorney(s). Applicant is reminded of the obligation to promptly notify the Patent and Trademark Office (Office) of any change in correspondence address to ensure receipt of all communications from the Office.

James R. Matthews

for Vincent N. Trans
Special Program Examiner
Technology Center 2100
Computer Architecture, Software, and
Information Security
(571) 272-3613

cc: Edward J. Radlo
SONNENSCHEIN NATH & ROSENTHAL LLP
685 Market Street, 6th Floor
San Francisco, CA 94105

UNITED STATES PATENT AND TRADEMARK OFFICE

COMMISSIONER FOR PATENTS
UNITED STATES PATENT AND TRADEMARK OFFICE
P.O. BOX 1450
ALEXANDRIA, VA 22313-1450
WWW.USPTO.GOV

Paper No. None

MARGER JOHNSON & MCCOLLOM, P.C.
1030 SW MORRISON STREET
PORTLAND OR 97205

COPY MAILED

APR 28 2005

OFFICE OF PETITIONS

In re Application of
Michael W. Wallace
Application No. 10/622,362
Filed: July 17, 2003
Attorney Docket Number: 7592-009
Title: VEHICLE OCCUPANT CLASSIFICATION SYSTEM AND METHOD

DECISION ON PETITION

This is a decision on the petition filed August 19, 2004, requesting that Figures 1-46 be accorded a filing date of July 17, 2003, as part of the original disclosure.

The application was deposited on July 17, 2003. However, on June 18, 2004, the Office of Initial Patent Examination (OIPE) mailed a "Notice of Incomplete Nonprovisional Application (notice)", stating that the application had not been accorded a filing date, and advising applicants that a filing date would be accorded upon the receipt of drawings. The notice set a two-month period for response.

In response, on August 19, 2004[1], applicants filed the present petition. The petition is further accompanied by copies of Figures 1-46 and a copy of applicants' postcard receipt acknowledging receipt of "thirty sheets of drawings" in the United States Patent and Trademark Office (Office) on July 17, 2003. Applicants request that Figures 1-46 be accorded a filing date of July 17, 2003 as part of the original disclosure.

1 The petition contains a certificate of mailing dated August 13, 2004.

Upon review of the record, the above-mentioned figures have not been located among the application papers. However, the evidence is convincing that the application papers deposited on July 17, 2003 included Figures 1-46, and the sheets containing these figures were subsequently misplaced in the Office.

Therefore, the application, including Figures 1-46, was complete on filing and these figures are entitled to a filing date of July 17, 2003 as part of the original disclosure.

Accordingly, the petition is **GRANTED**.

The notice mailed June 18, 2004 was sent in error, and is hereby **VACATED**. Therefore, no petition fee is necessary, and the same has not been charged to Petitioner's Deposit Account.

The application file is being returned to the Office of Initial Patent Examination for further processing with a filing date of July 17, 2003, using the original application papers filed on that date, as well as the Figures 1-46 submitted on August 19, 2004 and for indication in Office records that these figures were present on filing. OIPE will then mail a corrected filing receipt.

The general phone number for the Office of Petitions which should be used for status requests is (571) 272-3282. Telephone inquiries regarding *this decision* should be directed to the undersigned at (571) 272-3225.

**Paul Shanoski**
**Senior Attorney**
**Office of Petitions**
**United States Patent and Trademark Office**

**UNITED STATES DEPARTMENT OF COMMERCE**
**Patent and Trademark Office**
ASSISTANT SECRETARY OF COMMERCE AND
COMMISSIONER OF PATENTS AND TRADEMARKS
Washington, DC 20231

7/15/06

Patent No. :7347921
Inventor(s) :Barth et al.
Issued : 3/25/2008
Title : APPARATUS AND METHOD FOR THREADING A BIOPOLYMER THROUGH A NANOPORE
Atty.doc./File No.

Request for Certificates of Correction

Consideration has been given to your request for the issuance of a Certificate of Correction, for the above – identified patent under the provisions of CFR 1.322.

Inspection of the application for the patent reveals that item [56] is printed in accordance with the record. Therefore being no fault on the Patent and Trademark Office, It has no authority to issue a certificate of correction under the provision of 1.322.

In view of the forgoing, your request in this matter, is hereby denied.

Future written correspondence concerning this matter should be filed and directed to Decisions & Certificates of Correction Branch.

Henry Randall
Cecelia Newman
Decisions & Certificates
of Correction Branch
(703) 308-9390 Ext. 108

AGILENT TECHNOLOGIES INC.
LEGAL DEPARTMENT, P.O. BOX 7599
LOVELAND, CO 80537-0599

HR/CBN

UNITED STATES PATENT AND TRADEMARK OFFICE

Commissioner for Patents
United States Patent and Trademark Office
P.O. Box 1450
Alexandria, VA 22313-1450
www.uspto.gov

TESTA, HURWITZ & THIBEAULT, LLP
HIGH STREET TOWER
125 HIGH STREET
BOSTON MA 02110

COPY MAILED

MAY 1 1 2004

OFFICE OF PETITIONS

| | |
|---|---|
| In re Application of | : |
| Timothy Kirby et al. | : DECISION ACCORDING STATUS |
| Reissue Application No. 10/622,372 | : UNDER 37 CFR 1.47(a) |
| Filed: July 18, 2003 | : |
| Attorney Docket No. ITS-001(9759/3) | : |

This is in response to the petition under 37 CFR 1.47(a), filed April 22, 2004.

The petition is GRANTED.

The above-identified application was filed on July 18, 2003, without an executed oath or declaration and naming Timothy Kirby, David Grant, Bernie Goldbach, John Stanley and Sanjay Manandhar as joint inventors.

Accordingly, on October 20, 2003, a "Notice To File Missing Parts of Application" was mailed, requiring the basic filing fee, an executed oath or declaration and a surcharge for their late filing. A two month period for reply was set.

In response, the instant petition, combined declaration and power of attorney signed by joint inventors Stanley and Manandhar, and a request for fourth month extension of time were filed April 22, 2004. The petition under 37 CFR 1.47(a) is filed with the last known addresses of joint inventors Kirby, Grant and Goldbach, petition fee and surcharge. Additionally, a declaration by Susan Headley, an employee of Intellisign, Ltd (assignee) outlining the efforts enlisted to have joint inventors Kirby, Grant and Goldbach to execute the oath or declaration. Ms. Headley's declaration makes it clear that the application papers were sent and delivered to the non-signing joint inventors and that by their actions or inactions, they are refusing to cooperation with the filing of the instant application.

The applicant files this petition alleging that joint inventors Kirby, Grant and Goldbach refuse to sign the oath/declaration and seeks status under 37 CFR 1.47(a).

A grantable petition under 37 CFR 1.47(a) requires: (1) proof that the non-signing

BEST AVAILABLE COPY

inventor cannot be reached or refuses to sign the oath or declaration after having been presented with the application papers (specification, claims and drawings); (2) an acceptable oath or declaration in compliance with 35 U.S.C. §§ 115 and 116; (3) the petition fee; and (4) a statement of the last known address of the non-signing inventor.

The above-identified application and papers have been reviewed and found in compliance with 37 CFR 1.47(a). In view thereof, this application is hereby accorded Rule 1.47(a) status.

Thus, as provided in Rule 1.47©), this Office will forward notice of this application's filing to the non-signing inventors at the address given in the petition. Notice of the filing of this application will also be published in the Official Gazette.

The application is being forwarded to Technology Center 2673 for examination in due course.

Telephone inquiries related to this decision should be directed to the undersigned Petitions Attorney at (703) 305-4497.

Patricia Faison-Ball

Patricia Faison-Ball
Senior Petitions Attorney
Office of Petitions

BEST AVAILABLE COPY

UNITED STATES PATENT AND TRADEMARK OFFICE

Commissioner for Patents
United States Patent and Trademark Office
P.O. Box 1450
Alexandria, VA 22313-1450
www.uspto.gov

TIMOTHY KIRBY
14 ORLYNN PARK
LUSK
IRELAND

DAVID GRANT
BALLENCHEVE
MAYNALTAY
COUNTY HEATH
IRELAND

BERNIE GOLDBACH
8 UPR GARRISGREEN
KILKENNY
IRELAND

COPY MAILED

MAY 1 1 2004

OFFICE OF PETITIONS

In re Application of
Timothy Kirby et al.
Application No. 10/622,372
Filed: July 18, 2003
Title of Invention: METHODS AND APPARATUS FOR AN INTERACTIVE MEDIA DISPLAY

Dear Mr. Kirby, Mr. Grant and Mr. Goldbach:

You are named as a joint inventors in the above identified United States patent application, filed under the provisions of 35 U.S.C. 116 (United States Code), and 37 CFR 1.47(a), Rules of Practice in Patent Cases. Should a patent be granted on the application you will be designated therein as joint inventors.

As named inventors you are entitled to inspect any paper in the file wrapper of the application, order copies of all or any part thereof (at a prepaid cost per 37 CFR 1.19) or make your position of record in the application. Alternatively, you may arrange to do any of the preceding through a registered patent attorney or agent presenting written authorization from you. If you care to join the application, counsel of record (see below) would presumably assist you. Joining in the application would entail the filing of an appropriate oath or declaration by you pursuant to 37 CFR 1.63.

Telephone inquiries regarding this communication should be directed to the undersigned Petitions Attorney at (703) 305-4497. Requests for information regarding your application should be directed to the File Information Unit at 703/308-2733. Information regarding how to pay for and order a copy of the application, or a specific paper in the application, should be directed to Certification Division at 703/308-9726 or 1-800-972-6382 (outside the Washington D.C. area).

Patricia Faison-Ball

Patricia Faison-Ball
Senior Petitions Attorney
Office of Petitions

BEST AVAILABLE COPY

cc:

TESTA, HURWITZ & THIBEAULT, LLP
HIGH STREET TOWER
125 HIGH STREET
BOSTON MA 02110

UNITED STATES PATENT AND TRADEMARK OFFICE

Commissioner for Patents
United States Patent and Trademark Office
P.O. Box 1450
Alexandria, VA 22313-1450
www.uspto.gov

**Quine Intellectual Property Law Group**
**P.O. Box 458**
**Alameda, CA**

**COPY MAILED**

APR 2 8 2008

**OFFICE OF PETITIONS**

| | | |
|---|---|---|
| In re Application of | : | |
| Jennifer L. Whistler et al. | : | |
| Application No. 10/622,373 | : | DECISION ON PETITION |
| Filed: December 19, 2003 | : | TO WITHDRAW |
| Attorney Docket No. 12101-011-999 | : | FROM RECORD |
| | : | |

This is a decision on the Request to Withdraw as attorney or agent of record under 37 C.F.R. § 1.36(b), filed December 19, 2007.

The request is **NOT APPROVED** because it is moot.

A review of the file record indicates that the power of attorney to Quine Intellectual Property Law Group has been revoked by the assignee of the patent application on December 19, 2007. Accordingly, the request to withdraw under 37 C.F.R. § 1.36(b) is moot.

All future communications from the Office will continue to be directed to the below-listed address until otherwise notified by applicant.

Telephone inquires concerning this decision should be directed to Terri Williams at 571-272-2991.

T. Williams

Terri Williams
Petitions Examiner
Office of Petitions

cc: **Jones Day**
**222 East 41st Street**
**New York, NY 10017**

UNITED STATES PATENT AND TRADEMARK OFFICE

COMMISSIONER FOR PATENTS
UNITED STATES PATENT AND TRADEMARK OFFICE
P.O. BOX 1450
ALEXANDRIA, VA 22313-1450
www.uspto.gov

Finnegan, Henderson, Farabow,
Garrett & Dunner, L.L.P.
1300 I Street, N. W.
Washington, DC 20005-3315

COPY MAILED

JAN 28 2005

OFFICE OF PETITIONS

| | | |
|---|---|---|
| In re Application of | : | |
| James W. Waite, et al. | : | |
| Application No. 10/622,376 | : | DECISION GRANTING PETITION |
| Filed: July 18, 2003 | : | UNDER 37 CFR 1.137(b) |
| Attorney Docket No. 09131.0018 | : | |

This is a decision on the petition, filed November 3, 2004, which is being treated as a petition under 37 CFR 1.137(b) to revive the instant nonprovisional application for failure to timely notify the U.S. Patent and Trademark (USPTO) of the filing of an application in a foreign country, or under a multinational treaty that requires publication of applications eighteen months after filing. *See* 37 CFR 1.137(f).

The petition is **GRANTED**.

Petitioner states that the instant nonprovisional application is the subject of an application filed in an eighteen-month publication country on July 15, 2004. However, the USPTO was unintentionally not notified of this filing within 45 days subsequent to the filing of the subject application in an eighteen-month publication country.

In view of the above, this application became abandoned pursuant to 35 U.S.C. § 122(b)(2)(B)(iii) and 37 CFR 1.213(c) for failure to timely notify the Office of the filing of an application in a foreign country or under a multilateral international agreement that requires publication of applications 18 months after filing.

A petition to revive an application abandoned pursuant to 35 U.S.C. 122(b)(2)(B)(iii) for failure to notify the USPTO of a foreign filing must be accompanied by:

(1) the required reply which is met by the notification of such filing in a foreign country or under a multinational treaty;
(2) the petition fee as set forth in 37 CFR 1.17(m); and
(3) a statement that the entire delay in filing the required reply from the due date of the reply until the filing of a grantable petition was unintentional.

The instant petition has been found to be in compliance with 37 CFR 1.137(b). Accordingly, the failure to timely notify the USPTO of a foreign or international filing within 45 days after the date of filing of such foreign or international application as provided by 35 U.S.C. § 122(b)(2)(B)(iii) and 37 CFR 1.213(c) is accepted as having been unintentionally delayed.

The previous Request and Certification under 35 U.S.C. § 122(b)(2)(B)(i) has been rescinded. A Notice Regarding Rescission of Nonpublication Request which sets forth the projected publication date of May 5, 2005 accompanies this decision on petition.

Telephone inquiries concerning this decision should be directed to the undersigned at (571) 272-3223.

This application is being referred to Technology Center Art Unit 2857 for examination in due course.

Marianne E. Jenkins
Petitions Examiner
Office of Petitions
Office of the Deputy Commissioner
for Patent Examination Policy

ATTACHMENT: Notice Regarding Rescission of Nonpublication Request

UNITED STATES PATENT AND TRADEMARK OFFICE

UNITED STATES DEPARTMENT OF COMMERCE
United States Patent and Trademark Office
Address: COMMISSIONER FOR PATENTS
P.O. Box 1450
Alexandria, Virginia 22313-1450
www.uspto.gov

KLARQUIST SPARKMAN LLP
121 S.W. SALMON STREET
SUITE 1600
PORTLAND, OR 97204

Mail Date: 04/21/2010

| | | |
|---|---|---|
| **Applicant** | : Kunal Mukerjee | : DECISION ON REQUEST FOR |
| **Patent Number** | : 7609763 | : RECALCULATION of PATENT |
| **Issue Date** | : 10/27/2009 | : TERM ADJUSTMENT IN VIEW |
| **Appliction No** | : 10/622,378 | : OF WYETH AND NOTICE OF INTENT TO |
| **Filed** | : 07/18/2003 | : ISSUE CERTIFICATE OF CORRECTION |
| | | : |

The Request for Recalculation is **GRANTED** to the extent indicated.

The patent term adjustment has been determined to be **1726** days. The USPTO will *sua sponte* issue a certificate of correction reflecting the amount of PTA days determined by the recalculation.

Prior to the issuance of the certificate of correction, the USPTO will afford patentee an opportunity to be heard and request reconsideration. Accordingly, patentee has **one month or thirty (30) days**, whichever is longer, to file a request for reconsideration of this patent term adjustment calculation. See 35 U.S.C. 154(b)(3)(B)(ii) and 37 CFR 1.322(a)(4). No extensions of time will be granted under 37 CFR 1.136.

Patentee should use document code PET.OP if electronically filing a request for reconsideration of this patent term adjustment calculation. The patentee must also include the information required by 37 CFR 1.705(b)(2) and the fee required by 37 CFR 1.18(e). If patentee does not file a timely request for reconsideration of this patent term adjustment calculation including the information required by 37 CFR 1.705(b)(2) and the fee required by 37 CFR 1.18(e), the USPTO will issue a certificate of correction reflecting the PTA determination noted above.

Patentee should be aware that in order to preserve the right to review in the United States District Court for the District of Columbia of the USPTO patent term adjustment determination, patentee must ensure that he or she also take the steps required under 35 U.S.C. 154(b)(4)(A) in a timely manner. Nothing in the request for recalculation should be construed as providing an alternative time frame for commencing a civil action under 35 U.S.C. 154(b)(4)(A).

Any questions concerning this decision should be directed to the Office of Patent Legal Administration at 571-272-7702.

UNITED STATES PATENT AND TRADEMARK OFFICE

UNITED STATES DEPARTMENT OF COMMERCE
United States Patent and Trademark Office
Address: COMMISSIONER FOR PATENTS
P.O. Box 1450
Alexandria, Virginia 22313-1450
www.uspto.gov

| APPL NO. | FILING OR 371 (c) DATE | ART UNIT | FIL FEE REC'D | ATTY.DOCKET NO | DRAWINGS | TOT CLMS | IND CLMS |
|---|---|---|---|---|---|---|---|
| 10/622,395 | 07/18/2003 | 2684 | 834 | 2358 | 6 | 20 | 4 |

**CONFIRMATION NO. 4676**

**CORRECTED FILING RECEIPT**

*OC000000011933831*

28005
SPRINT
6391 SPRINT PARKWAY
KSOPHT0101-Z2100
OVERLAND PARK, KS 66251-2100

Date Mailed: 02/20/2004

Receipt is acknowledged of this regular Patent Application. It will be considered in its order and you will be notified as to the results of the examination. Be sure to provide the U.S. APPLICATION NUMBER, FILING DATE, NAME OF APPLICANT, and TITLE OF INVENTION when inquiring about this application. Fees transmitted by check or draft are subject to collection. Please verify the accuracy of the data presented on this receipt. **If an error is noted on this Filing Receipt, please write to the Office of Initial Patent Examination's Filing Receipt Corrections, facsimile number 703-746-9195. Please provide a copy of this Filing Receipt with the changes noted thereon. If you received a "Notice to File Missing Parts" for this application, please submit any corrections to this Filing Receipt with your reply to the Notice. When the USPTO processes the reply to the Notice, the USPTO will generate another Filing Receipt incorporating the requested corrections (if appropriate).**

**Applicant(s)**

David Welch, Shawnee, KS;
Thomas M. Sladek, Overland Park, KS;
Baoquan Zhang, Overland Park, KS;

**Assignment For Published Patent Application**

Sprint Spectrum L.P., Overland Park, KS;

**Domestic Priority data as claimed by applicant**

This application is a CIP of 10/356,310 01/30/2003

**Foreign Applications**

**If Required, Foreign Filing License Granted:** 10/17/2003

**Projected Publication Date:** Request for Non-Publication Acknowledged

**Non-Publication Request:** Yes

**Early Publication Request:** No

**Title**

Method and system for use of intelligent network processing to prematurely wake up a terminating mobile station

**Preliminary Class**

455

---

## LICENSE FOR FOREIGN FILING UNDER
## Title 35, United States Code, Section 184
## Title 37, Code of Federal Regulations, 5.11 & 5.15

**GRANTED**

The applicant has been granted a license under 35 U.S.C. 184, if the phrase "IF REQUIRED, FOREIGN FILING LICENSE GRANTED" followed by a date appears on this form. Such licenses are issued in all applications where the conditions for issuance of a license have been met, regardless of whether or not a license may be required as set forth in 37 CFR 5.15. The scope and limitations of this license are set forth in 37 CFR 5.15(a) unless an earlier license has been issued under 37 CFR 5.15(b). The license is subject to revocation upon written notification. The date indicated is the effective date of the license, unless an earlier license of similar scope has been granted under 37 CFR 5.13 or 5.14.

This license is to be retained by the licensee and may be used at any time on or after the effective date thereof unless it is revoked. This license is automatically transferred to any related applications(s) filed under 37 CFR 1.53(d). This license is not retroactive.

The grant of a license does not in any way lessen the responsibility of a licensee for the security of the subject matter as imposed by any Government contract or the provisions of existing laws relating to espionage and the national security or the export of technical data. Licensees should apprise themselves of current regulations especially with respect to certain countries, of other agencies, particularly the Office of Defense Trade Controls, Department of State (with respect to Arms, Munitions and Implements of War (22 CFR 121-128)); the Office of Export Administration, Department of Commerce (15 CFR 370.10 (j)); the Office of Foreign Assets Control, Department of Treasury (31 CFR Parts 500+) and the Department of Energy.

**NOT GRANTED**

No license under 35 U.S.C. 184 has been granted at this time, if the phrase "IF REQUIRED, FOREIGN FILING LICENSE GRANTED" DOES NOT appear on this form. Applicant may still petition for a license under 37 CFR 5.12, if a license is desired before the expiration of 6 months from the filing date of the application. If 6 months has lapsed from the filing date of this application and the licensee has not received any indication of a secrecy order under 35 U.S.C. 181, the licensee may foreign file the application pursuant to 37 CFR 5.15(b).

UNITED STATES PATENT AND TRADEMARK OFFICE

Commissioner for Patents
United States Patent and Trademark Office
P.O. Box 1450
Alexandria, VA 22313-1450
www.uspto.gov

MAILED FROM
DIRECTORS OFFICE

APR 13 2006

TECHNOLOGY CENTER 2800

BAINWOOD, HUANG & ASSOCIATES, LLC
Highpoint Center
2 Connector Road
Westborough, Massachusetts 01581

In re Application of:
Richard C. Slater
Serial No.: 10/622,403
Filed: July 18, 2003
Attorney Docket No.: **TXT05-06**

DECISION ON PETITION
TO WITHDRAW PREMATURE FINALITY
OF AN OFFICE ACTION

This is a decision in petition, filed on March 21, 2006, requesting that the finality of the Final Office Action of January 26, 2006 be withdrawn

Petitioner asserts that the Office Action of January 26, 2006 contains new grounds of rejection, which are not necessitated by an amendment and, thus, it is improper for the examiner to make the action final.

A review of the application file record indicates that an amendment was filed on November 21, 2005 in response to an Office Action of August 18, 2005. The amendment introduces into the claims subject matter which was not earlier presented, new dependent claims 30 to 35 were submitted. New claims 30 to 32 depend on previously rejected claim 1 and new claims 33 to 35 depend on previously rejected claim 24. Further search was conducted with respect to new claims and an Office Action was mailed January 26, 2006. This Office Action contains new grounds of rejection based on art not previously made of record (one newly cited and applied US Patent is prior art under 35 USC 102(b)), claims 1, 24 and 30 to 35 were rejected based on newly cited US Patent, and the action is made final because the new grounds of rejection were deemed necessitated by the November 21, 2005 amendment.

Under MPEP 706.07(a), a second or subsequent actions on the merits shall be made final except where the examiner introduces a new ground of rejection not necessitated by amendment of the application by the amendment.

The argument that since claim 1 has not been amended in the November 21, 2005 amendment and because the rejection based on Seguin is a new rejection of unamended claim 1, the Office Action should not be final is not persuasive because claim 30 to 32 depend on claim 1 and claims 33 to 35 depend on claim 24. Seguin was applied under 35 USC 102(b) for claims 1, 24 and 30 to 35.

The finality of the Office Action of January 26, 2006 is proper.
The petition is DENIED.

Robert Oberleitner, Director
Technology Center 2800

UNITED STATES PATENT AND TRADEMARK OFFICE

Commissioner for Patents
United States Patent and Trademark Office
P.O. Box 1450
Alexandria, VA 22313-1450
www.uspto.gov

DADE BEHRING INC.
LEGAL DEPARTMENT
1717 DEERFIELD ROAD
DEERFIELD IL 60015-0778

COPY MAILED
APR 25 2006
OFFICE OF PETITIONS

| | | |
|---|---|---|
| In re Application of | : | |
| Huynh-Ba et al. | : | |
| Application No. 10/622,435 | : | DECISION ON PETITION |
| Filed: July 18, 2003 | : | |
| Attorney Docket No. DCS-9179 | : | |

This is a decision on the petition under 37 CFR 1.181, filed April 7, 2006, to withdraw the holding of abandonment for the above-identified application.

On September 20, 2005, the Office mailed a final Office action, which set a three-month shortened statutory period for reply. On November 17, 2005, applicants filed an amendment in response to the final Office action. On January 5, 2006, the examiner mailed an Advisory Action, stating that the amendment failed to place the application in condition for allowance. On March 21, 2006 (certificate of mailing dated March 17, 2006), applicants filed a Request for Continued Examination (RCE).

On March 23, 2006, the Office mailed a Notice of Abandonment, which stated that the above-identified application was abandoned in view of applicants' failure to file a proper reply to the final Office action mailed on September 20, 2005. The Notice further stated that the Office received a proposed reply on November 17, 2005, but that it did not constitute a proper reply under 37 CFR 1.113(a) to the final rejection. Lastly, the Notice indicated that a proper reply

under 37 CFR 1.113 to a final rejection consisted only of: (1) a timely filed amendment, which placed the application in condition for allowance; (2) a timely filed Notice of Appeal (with appeal fee), or (3) a timely filed Request for Continued Examination (RCE) in compliance with 37 CFR 1.114). On April 7, 2006, applicants filed the present petition, a copy of the RCE and a copy of the Fee Transmittal for FY 2003.

In the present petition, applicants averred that the application was not abandoned and requested that the Office withdraw the holding of abandonment. Specifically, applicants stated that they filed a timely response in the form of an RCE on March 21, 2006 (certificate of mailing dated March 17, 2006). Additionally, applicants asserted that the Fee Transmittal for FY 2003 contained a general authorization to charge any necessary fees to the Deposit Account, and therefore, the Office could have charged applicants' Deposit account for a three-month extension of time to respond to the final Office Action of September 20, 2005.

Applicants' assertions are well taken. 37 CFR 1.136(a)(3)(B) provides that: " an authorization to charge all required fees, fees under 37 CFR 1.17, or all required extension of time fees will be treated as a constructive petition for an extension of time in any concurrent or future reply requiring a petition for an extension of time under 37 CFR 1.136(a) to be timely."

The record reveals that applicants filed a general authorization to charge all fees required. Therefore, the Office should have charged applicants' Deposit Account for an extension of time for response within the third month so that the RCE would be filed timely.

Accordingly, the petition is **granted.** The Notice of Abandonment was mailed in error and is hereby withdrawn. The application is restored to pending status in view of the fact that a response was timely filed and received on March 21, 2006 (certificate of mailing dated March 17, 2006).

The Office will charge the $1,020.00 extension of time fee for filing a response within the third month to applicants' Deposit Account as authorized.

The matter is being referred to the Technology Center Art Unit 1743.

Telephone inquiries concerning this matter may be directed to the undersigned at (571) 272-3211. All other inquiries concerning either the examination procedures or status of the application should be directed to the Technology Center.

Christina Tartera Donnell

Christina Tartera Donnell
Senior Petitions Attorney
Office of Petitions

UNITED STATES PATENT AND TRADEMARK OFFICE

UNITED STATES DEPARTMENT OF COMMERCE
United States Patent and Trademark Office
Address: COMMISSIONER FOR PATENTS
P.O. Box 1450
Alexandria, Virginia 22313-1450
www.uspto.gov

| APPLICATION NO. | FILING DATE | FIRST NAMED INVENTOR | ATTORNEY DOCKET NO. | CONFIRMATION NO. |
|---|---|---|---|---|
| 10/622,437 | 07/18/2003 | Thomas J. Fogarty | FGRTNZ00200 | 4971 |

40518 7590 01/28/2010
LEVINE BAGADE HAN LLP
2400 GENG ROAD, SUITE 120
PALO ALTO, CA 94303

| EXAMINER |
|---|
| DOWE, KATHERINE MARIE |

| ART UNIT | PAPER NUMBER |
|---|---|
| 3734 | |

| MAIL DATE | DELIVERY MODE |
|---|---|
| 01/28/2010 | PAPER |

**Please find below and/or attached an Office communication concerning this application or proceeding.**

The time period for reply, if any, is set in the attached communication.

UNITED STATES PATENT AND TRADEMARK OFFICE

Commissioner for Patents
United States Patent and Trademark Office
P.O. Box 1450
Alexandria, VA 22313-1450
www.uspto.gov

LEVINE BAGADE HAN LLP
2400 GENG ROAD, SUITE 120
PALO ALTO CA 94303

In re Application of:
FOGARTY, THOMAS J. et al
Serial No. 10/622,437
Filed: July 18, 2003
Docket: FGRTNZ00200
Title: EMBOLIZATION DEVICE AND A METHOD OF USING THE SAME

DECISION ON PETITION
UNDER 37 CFR 1.59

This is a decision on the petition filed December 9, 2009 requesting expunge of document. In the petition, petitioner requests expunge of Documents listed as Supplemental Information Disclosure Statement filed on November 10, 2009 at approximately at 14:27.10 from the case because it was filed by mistake. The Electronic Filing System Identification Number is 6425452. This IDS filed on November 10, 2009 includes 50 US patents, 2 WO foreign patent references and 14 Office action from US patent applications..

The USPTO does not remove any papers filed in an application. However, since the applicant has mistakenly filed the wrong documents on November 10, 2009, the documents have been blocked from public view in the Public Pair system.

Any inquiry regarding this decision should be directed to Henry C. Yuen, Special Programs Examiner, at (571) 272-4856.

PETITION GRANTED

Robert Olszewski, Director
Technology Center 3700

UNITED STATES PATENT AND TRADEMARK OFFICE

COMMISSIONER FOR PATENTS
UNITED STATES PATENT AND TRADEMARK OFFICE
P.O. BOX 1450
ALEXANDRIA, VA 22313-1450
www.uspto.gov

SPRINT
6391 SPRINT PARKWAY
KSOPHT0101-Z2100
OVERLAND PARK KS 66251-2100

**COPY MAILED**

APR 05 2004

**OFFICE OF PETITIONS**

| | |
|---|---|
| In re Application of | : |
| David Welch | : |
| Application No. 10/622,438 | :DECISION GRANTING PETITION |
| Filed: 18 July, 2003 | : |
| Attorney Docket No. 2336 | : |

This is a decision on the petition filed on 2 February, 2004, requesting that the above-identified application be accorded a filing date of 18 July, 2003, instead of the presently accorded filing date of 17 July, 2003.

The petition is **GRANTED**.

Petitioners assert that the application was deposited in Express Mail service on 18 July, 2003. In support of petitioners' contention that the application was deposited in Express Mail Post Office to Addressee Service on 18 July, 2003, petitioners supplied, with the present petition, a copy of Express Mail Customer Label No. EV333549632US (the same Express Mail number found on the itemized transmittal sheet filed with the original application papers located in the official file). The Express Mail label bears a "date-in" of "7-18-03".

The Office considers the date the paper or fee is shown to have been deposited in "Express Mail" to be the "Date-in" on the Express Mail label.[1] That is the date that verifies that the package was actually mailed. In view of the above, the evidence is convincing that the application was deposited as "Express Mail" with the U.S. Postal Service on 18 July, 2003.

In view of the above, the application is entitled to a filing date of 18 July, 2003.

The petition is granted. The petition fee of $130.00 is unnecessary and will be credited to counsel's deposit account, No..21-0765.

---

[1] MPEP 513.

The application is being returned to Office of Initial Patent Examination for reprocessing with a filing date of 18 July, 2003, not 17 July, 2003, and for issuance of a corrected Filing Receipt.

Telephone inquiries may be directed to the undersigned at 703-308-6918.

Douglas I. Wood
Senior Petitions Attorney
Office of Petitions

UNITED STATES PATENT AND TRADEMARK OFFICE

Commissioner for Patents
United States Patent and Trademark Office
P.O. Box 1450
Alexandria, VA 22313-1450
www.uspto.gov

**ARMSTRONG, KRATZ, QUINTOS, HANSON & BROOKS**
**1725 K STREET, NW**
**SITE 1000**
**WASHINGTON DC 20006**

COPY MAILED

FEB 14 2006

OFFICE OF PETITIONS

| | | |
|---|---|---|
| In re Application of | : | |
| Chikaomi Mori | : | |
| Application No. 10/622,464 | : | ON PETITION |
| Filed: July 21, 2003 | : | |
| Attorney Docket No. 030804 | : | |

This is a decision on the petition, filed February 8, 2006, under 37 CFR 1.313(c)(2) to withdraw the above-identified application from issue after payment of the issue fee.

The petition is **GRANTED**.

The above-identified application is withdrawn from issue for consideration of a submission under 37 CFR 1.114 (request for continued examination). See 37 CFR 1.313(c)(2).

**Petitioner is advised that the issue fee paid on September 20, 2005, in the above-identified application cannot be refunded. If, however, the above-identified application is again allowed, petitioner may request that it be applied towards the issue fee required by the new Notice of Allowance.**[1]

Telephone inquiries should be directed to the undersigned at (571) 272-3208.

The examiner of Technology Center AU 2829 will consider the request for continued examination under 37 CFR 1.114.

Karen Creasy
Petitions Examiner
Office of Petitions
Office of the Deputy Commissioner
for Patent Examination Policy

---

[1] The request to apply the issue fee to the new Notice may be satisfied by completing and returning the new Issue Fee Transmittal Form PTOL-85(b), which includes the following language thereon: "Commissioner for Patents is requested to apply the Issue Fee and Publication Fee (if any) or re-apply any previously paid issue fee to the application identified above." Petitioner is advised that, whether a fee is indicated as being due or not, the Issue Fee Transmittal Form **must** be completed and timely submitted to avoid abandonment. Note the language in bold text on the first page of the Notice of Allowance and Fee(s) Due (PTOL-85).

28/18

UNITED STATES PATENT AND TRADEMARK OFFICE

COMMISSIONER FOR PATENTS
UNITED STATES PATENT AND TRADEMARK OFFICE
P.O. BOX 1450
ALEXANDRIA, VA 22313-1450
www.uspto.gov

INTERNATIONAL BUSINESS MACHINES CORPORATION
DEPT. 18G
BLDG. 300-482
2070 ROUTE 52
HOPEWELL JUNCTION NY 12533

**COPY MAILED**

**FEB 0 5 2004**

**OFFICE OF PETITIONS**

| | |
|---|---|
| In re Application of<br>Chen, et al.<br>Application No. 10/622,477<br>Filed: July 18, 2003<br>Attorney Docket No. FIS920030102US1<br>For: VERTICAL MOSFET WITH DUAL WORK FUNCTION MATERIALS | DECISION ON PETITION |

This is a decision on the petition, filed November 6, 2003 (certificate of mailing date November 4, 2003), requesting that Figure 1 be accorded a filing date of July 18, 2003. The petition will be treated under 37 CFR 1.53(e).

The application was filed on July 18, 2003. On October 22, 2003, the Office of Initial Patent Examination mailed a "Notice of Omitted Item(s) in a Nonprovisional Application" informing petitioners that Figure 1, as described in the specification, appeared to have been omitted.

Petitioners request that Figure 1 be accorded a filing date of July 18, 2003 on the basis that 13 sheets of drawing figures, including Figure 1, were received in the Patent and Trademark Office (PTO) on July 18, 2003. In support, the instant petition is accompanied by a copy of applicants' itemized postcard receipt showing an Office of Initial Patent Examination generated barcode citing July 18, 2003 as the date of receipt. The postcard lists, *inter alia*, that the filing included 13 sheets of drawings.

The return postcard constitutes *prima facie* evidence that 13 sheets of drawing figures were filed on July 18, 2003. MPEP 503. A review of the application file reveals that there are 12 sheets of drawing figures present, depicting Figures 2 and 3A-3V.

Accordingly, the petition under 37 CFR 1.53(e) is **GRANTED**.

No petition fee has been or will be charged in connection with this matter.

---

The application is being returned to Office of Initial Patent Examination for further processing, with a filing date of **July 18, 2003**, using the copy of Figure 1 submitted with the instant petition.

Office records will be corrected to show that 13 sheets of drawings were present on filing.

Any inquiries pertaining to this matter may be directed to the undersigned at (703) 308-6712.

E. Shirene Willis

E. Shirene Willis
Senior Petitions Attorney
Office of Petitions

UNITED STATES PATENT AND TRADEMARK OFFICE

COMMISSIONER FOR PATENTS
UNITED STATES PATENT AND TRADEMARK OFFICE
P.O. BOX 1450
ALEXANDRIA, VA 22313-1450
www.uspto.gov

MAILED

JUN 2 2004

Office of the Director
Group 3600

RICHARD C. LITMAN
LITMAN LAW OFFICES, LTD.
P.O. BOX 15035
ARLINGTON, VA 22215

In re application of
William R. Hill
Application No. 10/622,505
Filed: July 21, 2003
For: MULTIFUNCTION STROLLER

**DECISION ON PETITION TO MAKE SPECIAL (APPLICANT'S AGE)**

This is a decision on the petition submitted on July 21, 2003 under 37 CFR 1.102 (c) to make the above-identified application special under the accelerated examination procedure set forth in MPEP 708.02, Section IV: Applicant's Age.

The petition is **GRANTED**.

An application may be accorded special status upon the filing of a petition providing evidence showing that the applicant is at least 65 years old. Such a showing may be provided by evidence such as a birth certificate or a statement from the applicant.

The evidence submitted with the petition is a declaration signed by Mr. Hill indicating that he is at least 65 years of age.

The examiner is directed (1) to make an interference search for possible interfering applications, (2) to promptly examine this application out of turn, and (3) if any interfering application is discovered, to examine such application simultaneously and state in the first official letter of such application that it is being taken out of turn because of a possible interference.

Petitioner is advised that this application will continue to be special, throughout its entire prosecution and pendency, including interference or appeal, if any, only if petitioner makes a prompt ***bona fide*** effort, in response to each Office action, to place the application in condition for allowance, even if it is necessary to conduct an interview with the examiner to accomplish this purpose.

**SUMMARY**: Petition to Make Special **GRANTED**.

Kenneth J. Dorner
Special Programs Examiner
Technology Center 3600
(703) 308-0866

KJD/slb: 05/24/04

UNITED STATES PATENT AND TRADEMARK OFFICE

COMMISSIONER FOR PATENTS
UNITED STATES PATENT AND TRADEMARK OFFICE
P.O. BOX 1450
ALEXANDRIA, VA 22313-1450
www.uspto.gov

MAILED

JUN 2 2004

Office of the Director
Group 3600

Richard C. Litman
LITMAN LAW OFFICES, LTD.
P.O. Box 15035
Arlington, VA 22215

In re application of
William R. Hill et al.
Application No. 10/622,505
Filed: July 21, 2003
For: MULTIFUNCTION STROLLER

**DECISION ON PETITION TO MAKE SPECIAL (APPLICANT'S AGE)**

This is a decision on the petition submitted on July 21, 2003 under 37 CFR 1.102 (c) to make the above-identified application special under the accelerated examination procedure set forth in MPEP 708.02, Section IV: Applicant's Age.

The petition is **GRANTED**.

An application may be accorded special status upon the filing of a petition providing evidence showing that the applicant is at least 65 years old. Such a showing may be provided by evidence such as a birth certificate or a statement from the applicant.

The evidence submitted with the petition is a declaration signed by Mr. William R. Hill indicating that he is at least 65 years of age.

The examiner is directed (1) to make an interference search for possible interfering applications, (2) to promptly examine this application out of turn, and (3) if any interfering application is discovered, to examine such application simultaneously and state in the first official letter of such application that it is being taken out of turn because of a possible interference.

Petitioner is advised that this application will continue to be special, throughout its entire prosecution and pendency, including interference or appeal, if any, only if petitioner makes a prompt ***bona fide*** effort, in response to each Office action, to place the application in condition for allowance, even if it is necessary to conduct an interview with the examiner to accomplish this purpose.

**SUMMARY**: Petition to Make Special **GRANTED**.

Kenneth J. Dorner
Special Programs Examiner
Technology Center 3600
(703) 308-0866

KJD/vdb: 5/5/04

UNITED STATES PATENT AND TRADEMARK OFFICE

Commissioner for Patents
United States Patent and Trademark Office
P.O. Box 1450
Alexandria, VA 22313-1450
www.uspto.gov

WOODCOCK WASHBURN LLP
CIRA CENTRE, 12TH FLOOR
2929 ARCH STREET
PHILADELPHIA, PA 19104-2891

**COPY MAILED**
MAR 02 2010

| | | |
|---|---|---|
| In re Application of | : | |
| Theirry Marnay, et al. | : | |
| Application No. 10/622,535 | : | DECISION GRANTING PETITION |
| Filed: July 21, 2003 | : | UNDER 37 CFR 1.313(c)(2) |
| Attorney Docket No. SYNT-0568 | : | |

This is a decision on the petition under 37 CFR 1.313(c)(2), filed March 1, 2010, to withdraw the above-identified application from issue after payment of the issue fee.

The petition is **GRANTED**.

The above-identified application is withdrawn from issue for consideration of a submission under 37 CFR 1.114 (request for continued examination). *See* 37 CFR 1.313(c)(2).

***Petitioner is advised that the issue fee paid on February 16, 2010 cannot be refunded. If, however, this application is again allowed, petitioner may request that it be applied towards the issue fee required by the new Notice of Allowance.***[1]

Telephone inquiries regarding this decision should be directed to undersigned at (571) 272-1642. All other inquiries concerning the examination or status of this application should be directed to the Technology Center.

This application is being referred to Technology Center AU 3733 for processing of the request for continued examination under 37 CFR 1.114 and for consideration of the concurrently filed information disclosure statement.

/AMW/
April M. Wise
Petitions Examiner
Office of Petitions

[1] *The request to apply the issue fee to the new Notice may be satisfied by completing and returning the new Part B – Fee(s) Transmittal Form (along with any balance due at the time of submission). Petitioner is advised that the Issue Fee Transmittal Form must be completed and timely submitted to avoid abandonment of the application.*

UNITED STATES PATENT AND TRADEMARK OFFICE

Commissioner for Patents
United States Patent and Trademark Office
P.O. Box 1450
Alexandria, VA 22313-1450
www.uspto.gov

**RONALD FALLATT**
**1923 SKYKNOLL WAY**
**ENCINITAS CA 92024**

COPY MAILED

JUN 18 2007

OFFICE OF PETITIONS

| | | |
|---|---|---|
| In re Application of | : | |
| **CHEN**, Jui-Kuang | : | |
| Application No. 10/622,546 | : | DECISION ON PETITION |
| Filed: July 21, 2003 | : | TO WITHDRAW |
| Attorney Docket No. **MR1035-886/CIP** | : | FROM RECORD |
| | : | |

This is a decision on the Request to Withdraw as attorney or agent of record under 37 C.F.R. § 1.36(b), filed January 3, 2007.

The request is **NOT APPROVED**.

A grantable request to withdraw as attorney/agent of record must be signed by every attorney/agent seeking to withdraw or contain a clear indication that one attorney is signing on behalf of another/others. A request to withdraw will not be approved unless at least 30 (thirty) days would remain between the date of approval and the later of the expiration date of a time to file a response or the expiration date of the maximum time period which can be extended under 37 C.F.R. § 1.136(a).

The Office cannot approve the request at this time since the reasons provided do not meet any of the conditions under the mandatory or permissive categories enumerated in 37 CFR 10.40. Section 10.40 of Title 37 of the Code of Federal Regulation states, "[a] practitioner shall not withdraw from employment in a proceeding before the Office without permission from the Office[.]" More specifically, 37 CFR 10.40 states, "[i]f paragraph (b) of this section is not applicable, a practitioner may not request permission to withdraw in matter pending before the Office unless such request or such withdrawal is" for one the permissive reasons listed in 37 CFR 10.40(c). The reasons set forth in the request "assignee does not wish to use my services" does not meet any of the conditions set forth in 37 CFR 10.40.

In order to request or take action in a patent matter, the assignee must establish its ownership of the patent to the satisfaction of the Director. In this regard, a Statement under 37 CFR 3.73(b) must have either: (i) documentary evidence of a chain of title from the original owner to the assignee (*e.g.*, copy of an executed assignment), and a statement affirming that the documentary evidence of the chain of title from the original owner to the assignee was or concurrently is being

submitted for recordation pursuant to § 3.11; or (ii) a statement specifying where documentary evidence of a chain of title from the original owner to the assignee is recorded in the assignment records of the Office (*e.g.*, reel and frame number).

All future communications from the Office will continue to be directed to the above-listed address until otherwise notified by applicant.

Telephone inquiries concerning this decision should be directed to the undersigned at 571-272-7253.

Monica A. Graves
Petitions Examiner
Office of Petitions

cc: **GARY SILVA**
**3G BIKES INC. LLC**
**851 PINE AVENUE**
**LONG BEACH, CA 90813**

UNITED STATES PATENT AND TRADEMARK OFFICE

Commissioner for Patents
United States Patent and Trademark Office
P.O. Box 1450
Alexandria, VA 22313-1450
www.uspto.gov

CATHERINE GEMRICH
ORUM & ROTH
53 W. JACKSON BLVD
CHICAGO IL 60604

**COPY MAILED**

AUG 2 2 2005

**OFFICE OF PETITIONS**

In re Application of
ADAMS et al.
Application No. 10/622,559
Filed: July 18, 2003
Attorney Docket No. 13550

DECISION
ON PETITION

This is a decision on the petition under 37 CFR 1.137(b), filed July 18, 2005, to revive the above-identified application.

The petition is **GRANTED**.

The above-identified application became abandoned for failure to reply in a timely manner to the non-final office action mailed November 24, 2004, which set a shortened statutory period for reply of three (3) months. No extensions of time under the provisions of 37 CFR 1.136(a) were obtained. Accordingly, the application became abandoned on February 25, 2005.

The petition satisfies the conditions for revival pursuant to the provisions of 37 CFR 1.137(b) in that (1) the reply in the form of an amendment; (2) the petition fee of $1500; and (3) the required statement of unintentional delay. Accordingly, the reply to the non-final action of November 24, 2004 is accepted as having been unintentionally delayed.

Since the above-identified application is not a utility or plant application filed before June 8, 1995, a terminal disclaimer pursuant under 37 CFR 1.137(d) dedicating to the public a terminal part of the term of any patent granted on the application or any patent granted on any continuing application that contains a specific reference under 35 U.S.C. 120, 121, or 365(c) to the application is not required with the Petition Pursuant to 37 CFR 1.137(b) to Revive Unintentionally Abandoned Application. In addition, the disclaimer fee of $130 ($65 if small entity) is not required. A refund of the $130 fee has been credited to deposit account number 04-2219 as authorized by the above petition.

Telephone inquiries concerning this decision should be directed to Denise Pothier at (571) 272-4787.

The application matter is being forwarded to Technology Center Art Unit 1772.

Frances Hicks
Frances Hicks
Petitions Examiner
Office of Petitions

UNITED STATES PATENT AND TRADEMARK OFFICE

Commissioner for Patents
United States Patent and Trademark Office
P.O. Box 1450
Alexandria, VA 22313-1450
www.uspto.gov

COPY MAILED
OCT 1 0 2006
OFFICE OF PETITIONS

Orum & Roth LLC
53 W. Jackson Boulevard
Chicago IL 60604-3606

| | | |
|---|---|---|
| In re Application of | : | |
| ADAMS, et al. | : | |
| Application No. 10/622,559 | : | DECISION ON PETITION |
| Filed: July 18, 2003 | : | TO WITHDRAW |
| Attorney Docket No. 13550 | : | FROM RECORD |
| | : | |

This is a decision on the Request to Withdraw as attorney or agent under 37 C.F.R. § 1.36(b) or 37 C.F.R. § 10.40 filed July 16, 2006.

The request is **APPROVED**.

A review of the file record indicates that Catherine L. Gemrich: (1) does not have power of attorney in this patent application; and (2) has been employed or otherwise engaged in the proceedings in this patent application. In view of the present decision, Catherine L. Gemrich has been withdrawn from the present application and may not prepare or submit papers under 37 C.F.R. § 1.34, or correspond in any manner in this application unless appointed in an acceptable power of attorney under 37 C.F.R. § 1.32(b).

Applicant is reminded that there is no attorney of record at this time.

A Review of the file discloses that a non-final Office action was mailed on June 08, 2006, which set forth a three month shortened statutory period for reply. Extensions of time under 37 CFR 1.136(a) were available. To date, there is no indication that a reply to the Office action of June 08, 2006 has been received.

The correspondence address remains unchanged.

Telephone inquires concerning this decision should be directed to Patricia Volpe at 571-272-6825.

David Bucci
Petitions Examiner
Office of Petitions

UNITED STATES PATENT AND TRADEMARK OFFICE

Commissioner for Patents
United States Patent and Trademark Office
P.O. Box 1450
Alexandria, VA 22313-1450
www.uspto.gov

Manelli Denison & Selter PLLC
2000 M Street. N.W.
Suite 700
Washington DC 20036

| | | |
|---|---|---|
| In re Application of | : | MAR 18 2008 |
| JOSEPH, J. MICHAEL | : | |
| Application No. 10/622,567 | : | **DECISION ON PETITION** |
| Filed: July 21, 2003 | : | |
| Attorney Docket No. 051252-5244 | : | |

This is a response to the communication-titled Petition To Withdraw Improper Notice Of Abandonment- received in the United States Patent & Trademark (USPTO) on February 10, 2009. The communication is being treated as a Petition To Withdraw Holding of Abandonment under 37 CFR § 1.18(b).

The petition is **DISMISSED**.

The above-identified application was held abandoned for applicant's failure to timely pay the issue fee, as required in the Notice of Allowance and Fee(s) Due mailed October 10, 2008. The Notice of Abandonment, mailed on February 2, 2009.

In light of the non-compliance with 37 CFR § 1.8(b), the holding of abandonment cannot be withdrawn.

In the event that correspondence is considered timely filed by being mailed or transmitted in accordance with paragraph (a) of this section, but not received in the U.S. Patent and Trademark Office after a reasonable amount of time has elapsed from the time of mailing or transmitting of the correspondence, or after the application is held to be abandoned, or after the proceeding is dismissed or decided with prejudice, or the prosecution of a reexamination proceeding is terminated pursuant to § 1.550(d) or § 1.957(b) or limited pursuant to § 1.957(c), or a requester paper is refused consideration pursuant to § 1.957(a), the correspondence will be considered timely if the party who forwarded such correspondence:

(1) Informs the Office of the previous mailing or transmission of the correspondence promptly after becoming aware that the Office has no evidence of receipt of the correspondence;

(2) Supplies an additional copy of the previously mailed or transmitted correspondence and certificate; and

(3) Includes a statement that attests on a personal knowledge basis or to the satisfaction of the Director to the previous timely mailing, transmission or submission. If the correspondence was sent by facsimile transmission, a copy of the sending unit's report confirming transmission may be used to support this statement. If the correspondence was transmitted via the Office electronic filing system, a copy of an acknowledgment receipt generated by the Office electronic filing system confirming submission may be used to support this statement.

■ Under 37 CFR 1.137(a), a petition for the revival of an ***unavoidable*** abandoned application

■ Under 37 CFR 1.137(b), a petition for the revival of an ***unintentionally*** abandoned application

Further inquires with respect to filing a petition under 37 CFR § 1.137 may be directed to the Office of Petitions at 571-272-3282 or addressed as follows:

*By mail:* Mail Stop Petitions
Commissioner for Patents
Office of Petitions
P O Box 1450
Alexandria, VA 22313-1450

Telephone inquires concerning this decision matter may be directed to the undersigned at (703) 308-9250 Ext. 175.

Kay D. Pinkney
Application Assistance Unit
Office of Data Management

**UNITED STATES PATENT AND TRADEMARK OFFICE**

OFFICE OF DATA MANAGEMENT

**Manelli Denison & Selter PLLC**
**2000 M Street. N.W.**
**Suite 700**
**Washington DC 20036**

MAY - 5 2010

In re Application of
JOSEPH, J. MICHAEL :
Application No. 10/622,567 : **DECISION ON PETITION**
Filed: July 21, 2003 :
Attorney Docket No.:051252-5244 :

This is a decision on the Request for Reconsideration of Dismissed Petition to Withdraw Improper Notice of Abandonment, received in the United States Patent and Trademark Office (USPTO) filed on April 28, 2010 for the above-identified Application.

The Petition of Dismissal mailed March 18, 2010 was incorrect and hereby **VACATED.**

The Petition is **Granted**.

It is recommended to the use of the preprinted form mailed by the Patent and Trademark Office instead of creating your own transmittal.

However, as the Request for reconsideration points out, all three items under 37 CFR 1.8(b) has been complied with.

- informed the office of the previous mailing promptly
- supplied an additional copy of the previous mailing including the certificate of mailing.
- included a statement that the issue fee was timely transmitted.

Telephone inquires concerning this decision be directed to the undersigned in the Office of Patent Publication at 703-756-1547.

Kay D. Pinkney
Application Assistance Unit
Office of Data Management

UNITED STATES PATENT AND TRADEMARK OFFICE

Commissioner for Patents
United States Patent and Trademark Office
P.O. Box 1450
Alexandria, VA 22313-1450
www.uspto.gov

Litman Law Offices, Ltd.
Post Office Box 15035
Crystal City Station
Arlington, VA 22215

**COPY MAILED**

SEP 19 2005

**OFFICE OF PETITIONS**

In re Application of:
GREGORY, STEVE
Application No.: 10/622,586
Filing Date: July 21, 2003
Attorney's Docket No.: 22394.00
For: WATERING JUG FOR PLANTS

DECISION ON PETITION FOR REVIVAL OF ABANDONED APPLICATION UNDER 37 CFR 1.137(b)

This is a decision on the petition under 37 CFR 1.137(b), filed April 28, 2005 to revive the above-entitled application.

The petition is **GRANTED**.

The above-identified application became abandoned for failure to file a proper reply in a timely manner to the non-final Office action mailed April 6, 2004, which set a shortened statutory period for reply of three (3) months. A response was not filed and no extensions of time under the provisions of 37 CFR 1.136(a) were obtained. Accordingly, this application became abandoned on July 7, 2004.

The present petition satisfies the conditions for revival pursuant to the provisions of 37 CFR 1.137(b) in that (1) the reply in the form of a response to the Office action mailed April 6, 2004; (2) the petition fee; and (3) the required statement of unintentional delay have been received. Accordingly, the reply to the Office action of April 6, 2004 is accepted as having been unintentionally delayed.

Telephone inquiries concerning this decision should be directed to Attorney-Advisor, Anthony Smith at (571) 272-3298 or in his absence, the undersigned at (571) 272-3217.

The application is being referred back to GAU 3754 further processing.

Frances Hicks for
Brian Hearn
Petitions Examiner
Office of Petitions

UNITED STATES PATENT AND TRADEMARK OFFICE

Commissioner for Patents
United States Patent and Trademark Office
P.O. Box 1450
Alexandria, VA 22313-1450
www.uspto.gov

FEB 16 2005

OBLON, SPIVAK, MCCLELLAND, MAIER & NEUSTADT, P.C.
1940 DUKE STREET
ALEXANDRIA VA 22314

| | |
|---|---|
| In re Application of | : |
| Mitsuo Ohashi et al | : |
| Serial No.: 10/622,589 | : PETITION DECISION |
| Filed: July 21, 2003 | : |
| Attorney Docket No.: 237439US0RE | : |

This is in response to the petition under 37 CFR 1.183, filed December 30, 2004, requesting acceptance of a substitute specification in a reissue application.

A review of the file history shows that the examiner mailed an *ex parte Quayle* action to applicants on September 29, 2004, setting a two month shortened statutory period for reply and requiring a substitute specification. Applicants filed the substitute specification incorporating the numerous Certificate of Correction changes into the specification, as required, and this petition, as required.

The petition is **GRANTED**. The requirements of 37 CFR 1.125(d) and 1.173(a)(1) are hereby waived, as requested.

Should there be any questions about this decision please contact William R. Dixon, Jr., by letter addressed to Director, TC 1600, at the address listed above, or by telephone at 571-272-0519 or by facsimile sent to the general Office facsimile number 571-273-8300.

Bruce M. Kisliuk
Director, Technology Center 1600

UNITED STATES PATENT AND TRADEMARK OFFICE

UNITED STATES DEPARTMENT OF COMMERCE
United States Patent and Trademark Office
Address: COMMISSIONER FOR PATENTS
P.O. Box 1450
Alexandria, Virginia 22313-1450
www.uspto.gov

CARLSON, GASKEY & OLDS, P.C.
400 WEST MAPLE ROAD
SUITE 350
BIRMINGHAM, MI 48009

Mail Date: 04/21/2010

| | | |
|---|---|---|
| **Applicant** | : Edwin A. Hallberg | : DECISION ON REQUEST FOR |
| **Patent Number** | : 7584575 | : RECALCULATION of PATENT |
| **Issue Date** | : 09/08/2009 | : TERM ADJUSTMENT IN VIEW |
| **Appliction No** | : 10/622,603 | : OF WYETH AND NOTICE OF INTENT TO |
| **Filed** | : 07/18/2003 | : ISSUE CERTIFICATE OF CORRECTION |
| | | : |

The Request for Recalculation is **GRANTED** to the extent indicated.

The patent term adjustment has been determined to be **613** days. The USPTO will *sua sponte* issue a certificate of correction reflecting the amount of PTA days determined by the recalculation.

Prior to the issuance of the certificate of correction, the USPTO will afford patentee an opportunity to be heard and request reconsideration. Accordingly, patentee has **one month or thirty (30) days**, whichever is longer, to file a request for reconsideration of this patent term adjustment calculation. See 35 U.S.C. 154(b)(3)(B)(ii) and 37 CFR 1.322(a)(4). No extensions of time will be granted under 37 CFR 1.136.

Patentee should use document code PET.OP if electronically filing a request for reconsideration of this patent term adjustment calculation. The patentee must also include the information required by 37 CFR 1.705(b)(2) and the fee required by 37 CFR 1.18(e). If patentee does not file a timely request for reconsideration of this patent term adjustment calculation including the information required by 37 CFR 1.705(b)(2) and the fee required by 37 CFR 1.18(e), the USPTO will issue a certificate of correction reflecting the PTA determination noted above.

Patentee should be aware that in order to preserve the right to review in the United States District Court for the District of Columbia of the USPTO patent term adjustment determination, patentee must ensure that he or she also take the steps required under 35 U.S.C. 154(b)(4)(A) in a timely manner. Nothing in the request for recalculation should be construed as providing an alternative time frame for commencing a civil action under 35 U.S.C. 154(b)(4)(A).

Any questions concerning this decision should be directed to the Office of Patent Legal Administration at 571-272-7702.

UNITED STATES PATENT AND TRADEMARK OFFICE

COMMISSIONER FOR PATENTS
UNITED STATES PATENT AND TRADEMARK OFFICE
P.O. BOX 1450
ALEXANDRIA, VA 22313-1450
www.uspto.gov

Paper No.

VEDDER PRICE KAUFMAN &
KAMMHOLZ
222 N. LASALLE STREET
CHICAGO, IL 60601

**COPY MAILED**

APR 14 2006

**OFFICE OF PETITIONS**

| | | |
|---|---|---|
| In re Patent No. 6,911,989 | : | |
| Peyman Hojabri | : | DECISION ON REQUEST FOR |
| Issue Date: June 28, 2005 | : | RECONSIDERATION OF |
| Application No. 10/622,613 | : | PATENT TERM ADJUSTMENT |
| Filed: July 18, 2003 | : | |
| Atty Docket No. P05619(11461. | : | |
| 00.0175) | : | |

This is a decision on the "PETITION TO CORRECT PATENT TERM ADJUSTMENT," filed August 29, 2005. Patentee requests that the patent term adjustment indicated on the patent be corrected from eleven (11) days to one hundred thirty-one (131) days.

The request for reconsideration of the patent term adjustment under § 1.705(d) is **DISMISSED**.

Patentee is given **TWO (2) MONTHS** from the mail date of this decision to respond. No extensions of time will be granted under § 1.136.

On June 28, 2005, application No. 10/622,613 matured into Patent No. 6,911,989. The instant request for reconsideration filed Monday, August 29, 2005, was timely filed within 2 months of the date the patent issued. See § 1.705(d). The Patent issued with

a revised Patent Term Adjustment of 11 days. The PTA of 131 days was reduced by 120 days pursuant to 37 CFR § 1.704(c)(10) for the submission of drawings after the mailing of the notice of allowance.

Patentee acknowledges submitting replacement sheets of drawings after the r of the notice of allowance on January 27, 2005. However, patentee asserts that the assigned should not be penalized with a reduction pursuant to § 1.704(c)(10) in this case. Patentee states that the only change to the drawings filed on February 25, 2005, was that words the "(Prior Art)" were added to Figures 1 and 2. Furthermore, this change was made per the request of the examiner in the Notice of Allowability and was required to avoid abandonment of the application. However, no provision of the Patent Act of the Code of Federal Regulations requires the action required in the Notice.

Patentee's arguments have been considered, but are not persuasive. The submission of a response to the examiner's reasons for allowance or a request to correct an error or omission in the "Notice of Allowance" or "Notice of Allowability" is not considered a failure to engage in reasonable efforts to conclude processing or examination of an application. See *Clarification of 37 CFR 1.704(c)(10) - Reduction of Patent Term Adjustment for Certain Types of Papers Filed After a Notice of Allowance*, 1247 OG 111 (June 26, 2001; See also MPEP 2700. However, the filing of drawings after the mailing of a Notice of Allowance is properly a basis for reduction of patent term adjustment.

37 CFR § 1.704(c)(10) provides that:

Submission of an amendment under § 1.312 or other paper after a notice of allowance has been given or mailed, in which case the period of adjustment set forth in § 1.703 shall be reduced by the lesser of:

(i) The number of days, if any, beginning on the date the amendment under § 1.312 or other paper was filed and ending on the mailing date of the Office action or notice in response to the amendment under § 1.312 or such other paper;

or

(ii) Four months;

In this instance, it is undisputed that rather than file an argument that the Notice was in error, patentee filed drawings after the mailing of the Notice of Allowance. Other than those papers identified in this Notice, all papers filed after allowance of an application substantially delay the Office's ability to process an application for a patent because the Office does not wait until payment of the Issue Fee to begin the patent issue process. As a result, 37 CFR 1.704(c)(10) does not distinguish between papers that are and are not required by the Office. Filing of any drawings after allowance will be treated as a failure to engage in reasonable efforts to conclude prosecution.

Furthermore, patentee does not dispute that Figures 1 and 2 were properly labeled as "(Prior Art)." Rather, patentee asserts that the examiner was without authority to make such a request. In this regard, patentee's attention is directed to MPEP 608.02(g). This provision provides that:

> Figures showing the prior art are usually unnecessary and should be canceled. Ex parte Elliott, 1904 C.D. 103, 109 O.G. 1337 (Comm'r Pat. 1904). However, where needed to understand applicant's invention, they may be retained if designated by a legend such as "Prior Art."

In order to avoid this failure to engage in reasonable efforts to conclude prosecution of the application, patentee should have filed formal drawings in compliance with MPEP 608.02(g) prior to the mailing of the notice of allowance. The drawings filed September 8, 2003 were formal but did not include the Prior Art labels.

Accordingly, pursuant to § 1.704(c)(10), the patent term adjustment was properly reduced by the lesser number of days, 120, counting the number of days in the period beginning on the date the drawings were filed, February 25, 2005, and ending on the date of issuance of the patent, June 28, 2005.

In view thereof, the reduction of 120 days was proper

It is concluded that the patent properly issued with a revised Patent Term Adjustment of eleven (11) days.

Receipt is acknowledged of the $200.00 fee set forth in 37 CFR 1.18(e). No additional fees are required.

Telephone inquiries specific to this decision may be directed to the undersigned at (571) 272-3219.

Nancy Johnson
Senior Petitions Attorney
Office of Petitions

UNITED STATES PATENT AND TRADEMARK OFFICE

Commissioner for Patents
United States Patent and Trademark Office
P.O. Box 1450
Alexandria, VA 22313-1450
www.uspto.gov

WESTERMAN HATTORI DANIELS & ADRIAN LLP
1250 CONNECTICUT AVENUE NW
SUITE 700
WASHINGTON, DC 20036

COPY MAILED

DEC 08 2005

OFFICE OF PETITIONS

| | |
|---|---|
| In re Application of | : |
| Kenichi Watanabe | : |
| Application No. 10/622,614 | : DECISION GRANTING PETITION |
| Filed: July 21, 2003 | : UNDER 37 CFR 1.313(c)(2) |
| Attorney Docket No. 030877 | : |

This is a decision on the petition, filed December 2, 2005, under 37 CFR 1.313(c)(2) to withdraw the above-identified application from issue after payment of the issue fee.

The petition is **GRANTED**.

The above-identified application is withdrawn from issue for consideration of a submission under 37 CFR 1.114 (request for continued examination). See 37 CFR 1.313(c)(2).

***Petitioner is advised that the issue fee paid on June 2, 2005 in the above-identified application cannot be refunded. If, however, the above-identified application is again allowed, petitioner may request that it be applied towards the issue fee required by the new Notice of Allowance.***[1]

Telephone inquiries should be directed to the undersigned at (571) 272-3218.

This matter is being referred to Technology Center AU 2826 for processing of the request for continued examination under 37 CFR 1.114 and for consideration of the Information Disclosure Statement.

Frances Hicks
Petitions Examiner
Office of Petitions

---

[1] *The request to apply the issue fee to the new Notice may be satisfied by completing and returning the new Issue Fee Transmittal Form PTOL-85(b) (along with any balance due at the time of payment), which includes the following language thereon: "Commissioner for Patents is requested to apply the Issue Fee and Publication Fee (if any) or re-apply any previously paid issue fee to the application identified above." Petitioner is advised that, whether a fee is indicated as being due or not, the Issue Fee Transmittal Form* **must** *be completed and timely submitted to avoid abandonment. Note the language in bold text on the first page of the Notice of Allowance and Fee(s) Due (PTOL-85).*

UNITED STATES PATENT AND TRADEMARK OFFICE

Commissioner for Patents
United States Patent and Trademark Office
P.O. Box 1450
Alexandria, VA 22313-1450
www.uspto.gov

**LEONG C LEI**
**PMB# 1008**
**1867 YGNACIO VALLEY ROAD**
**WALNUT CREEK, CA 94598**

**COPY MAILED**

AUG 1 0 2005

**OFFICE OF PETITIONS**

| | | |
|---|---|---|
| In re Application of | : | |
| Wu, Chih-Chuan | : | |
| Application No. 10/622,637 | : | ON PETITION |
| Filed: July 21, 2003 | : | |
| Attorney Docket No. FP9627 | : | |

This is a decision on the petition under 37 C.F.R. § 1.137(b), filed July 31, 2005, to revive the above-identified application.

The petition is **GRANTED.**

This application became abandoned for failure to timely reply to the non-final Office action mailed June 29, 2004. No extensions of time under the provisions of 37 CFR 1.136(a) were obtained. Accordingly, this application became abandoned on September 30, 2004. A Notice of Abandonment was mailed January 26, 2005.

Petitioner has met the requirements to revive the above-identified application pursuant to 37 CFR 1.137(b).

This matter is being referred to Technology Center 3600 for further examination on the merits.

Telephone inquiries regarding this decision should be directed to the undersigned at (571) 272-3282.

Liana Chase
Petitions Examiner
Office of Petitions
Office of the Deputy Commissioner
for Patent Examination Policy

UNITED STATES PATENT AND TRADEMARK OFFICE

COMMISSIONER FOR PATENTS
UNITED STATES PATENT AND TRADEMARK OFFICE
P.O. BOX 1450
ALEXANDRIA, VA 22313-1450
www.uspto.gov

MAILED
FROM DIRECTORS OFFICE

JAN 13 2006

TECHNOLOGY CENTER 3600

Leong C Lei
PMB# 1008
1867 Ygnacio Valley Road
Walnut Creek CA 94598

| | | |
|---|---|---|
| In re Application of | : | |
| Chih-Chuan Wu | : | DECISION ON PETITION |
| Application No. 10/622,637 | : | TO WITHDRAW THE |
| Filed: July 21, 2003 | : | HOLDING OF ABANDONMENT |
| For: LONG STICK MOWER | : | |

This is a decision on applicant's petition to withdraw the holding of abandonment, filed in the United States Patent and Trademark Office (USPTO), on March 21, 2005.

The petition is **DISMISSED.**

A review of the file record reveals that the application became abandoned for failure to respond to the Office action mailed to applicant on June 29, 2004. A Notice of Abandonment was mailed on January 26, 2005.

Applicant's petition indicates that the Office action was never received. In support thereof applicant has provided a copy of "the docket record". The support provided is not considered to be a docket record and appears to be nothing other than a copy of a file jacket.

There is a strong presumption that Office communications properly addressed and delivered to the United States Postal Services, are in fact delivered to the addressee. An allegation that the Office communication was not received must be overcome by a showing that it was not received.

The showing required to establish non-receipt of an Office communication must include all of the following requirements:

(1) A statement from the practitioner stating the Office communication was not received by the practitioner;

(2) A statement attesting to the fact that a search of the file jacket and docket records indicates that the Office communication was not received; and

(3) A copy of the docket record where the non-received Office communication would have been entered had it been received and docketed must be attached to and referenced in practitioner's statement.

The docket records indicated above must include **a copy of the list of all responses in the practitioner's office with the due date at and around September 29, 2004**. See Notice entitled "Withdrawing the Holding of Abandonment When Office Actions Are Not Received," 1156 OG 53 (November 16, 1993).

The petitioner has failed to comply with requirement (3) indicated above. Applicant has only set forth that the Office action mailed July 02, 2004 was not received or placed in the file for application 10/622,637. A complete docket record with a copy of the list of all responses in the practitioner's office with the due date at and around September 29, 2004 is required.

Petitioner's evidence of non-receipt of the Office action mailed June 29, 2004 is insufficient to withdraw the holding of abandonment, and the petition is **DISMISSED**.

Any request for reconsideration of this decision must be submitted within **TWO (2) MONTHS** from the mail date of this decision. Extensions of time under 37 CFR 1.136(a) are permitted. The reconsideration request should include a cover letter entitled "Renewed Petition Under 37 CFR 1.181."

Correspondence with respect to a Petition to Withdraw the Holding of Abandonment under *Delgar Inc. v. Schuyler* should be mailed to the Commissioner for Patents, P.O. Box 1450, Alexandria, VA 22313-1450.

for

Randolph A. Reese
Special Program Examiner
Patent Technology Center 3600
(571) 272-6619

RAR/rjc 008/03/05

# UNITED STATES PATENT AND TRADEMARK OFFICE

UNITED STATES DEPARTMENT OF COMMERCE
United States Patent and Trademark Office
Address: COMMISSIONER FOR PATENTS
P.O. Box 1450
Alexandria, Virginia 22313-1450
www.uspto.gov

| APPLICATION NO. | FILING DATE | FIRST NAMED INVENTOR | ATTORNEY DOCKET NO. | CONFIRMATION NO. |
|---|---|---|---|---|
| 10/622,660 | 07/21/2003 | Takashi Yamaguchi | 2018-743 | 3836 |

23117 7590 04/22/2008
NIXON & VANDERHYE, PC
901 NORTH GLEBE ROAD, 11TH FLOOR
ARLINGTON, VA 22203

| EXAMINER |
|---|
| CECIL, TERRY K |

| ART UNIT | PAPER NUMBER |
|---|---|
| 1797 | |

| MAIL DATE | DELIVERY MODE |
|---|---|
| 04/22/2008 | PAPER |

**Please find below and/or attached an Office communication concerning this application or proceeding.**

The time period for reply, if any, is set in the attached communication.

UNITED STATES PATENT AND TRADEMARK OFFICE

Commissioner for Patents
United States Patent and Trademark Office
P.O. Box 1450
Alexandria, VA 22313-1450
www.uspto.gov

4-22-08

| | | |
|---|---|---|
| In re Application of | : | DECISION ON |
| Yamagachi et al. | : | PETITION |
| Serial No. 10/622,660 | : | |
| Filed: July 21, 2003 | : | |
| For: INJECTOR HAVING HOLES IN FILTER SECTION THEREOF | : | |

This is a decision on the paper received April 3, 2008 titled PETITION UNDER 37 CFR § 1.181 FOR REVIEW OF EXAMINER'S DECISION TO REFUSE ENTRY OF THE AMENDMENT FILED JANUARY 31, 2008.

On January 31, 2007, applicants filed an amendment after final rejection that was refused entry by the examiner. On April 3, 2008, applicants filed the instant petition, and simultaneously, a "Pre-Appeal Brief Request for Review."

The panel decision on the "Pre-Appeal Brief Request for Review" (which accompanies this Decision) is to reopen prosecution. The decision to reopen prosecution renders moot the instant petition.

Accordingly, the petition for entry of the after final amendment is **DISMISSED** as moot.

_/JACQUELINE STONE/

Jacqueline M. Stone, Director
Technology Center 1700
Chemical and Materials Engineering

NIXON & VANDERHYE, PC
901 NORTH GLEBE ROAD, 11TH FLOOR
ARLINGTON VA 22203

UNITED STATES PATENT AND TRADEMARK OFFICE

COMMISSIONER FOR PATENTS
UNITED STATES PATENT AND TRADEMARK OFFICE
P.O. BOX 1450
ALEXANDRIA, VA 22313-1450
www.uspto.gov

TAIYO CORPORATION
401 HOLLAND LANE
#407
ALEXANDRIA, VA 22314

COPY MAILED
MAR 08 2007
OFFICE OF PETITIONS

| | | |
|---|---|---|
| In re Application of | : | |
| YOSHIOKA et al | : | |
| Application No.: 10/622,668 | : | DECISION ON PETITION |
| Filing Date: July 21, 2003 | : | UNDER 37 CFR 1.78(a)(3) |
| Attorney Docket No.: FSF-031391 | : | |

This is a decision on the petition under 37 CFR 1.78(a)(3), filed November 29, 2006, to accept an unintentionally delayed claim under 35 U.S.C. 120 for the benefit of priority to the prior-filed nonprovisional application set forth in the amendment filed concurrently with the instant petition.

The petition is **GRANTED**.

The present nonprovisional application was filed after November 29, 2000, and the claim herein for the benefit of priority to the prior-filed nonprovisional application is submitted after expiration of the period specified in 37 CFR 1.78(a)(2)(ii). Therefore, this is a proper petition under 37 CFR 1.78(a)(3).

A petition for acceptance of a late claim for priority under 37 CFR 1.78(a)(3) is only applicable to those applications filed on or after November 29, 2000. Further, the petition is appropriate only after the expiration of the period specified in 37 CFR 1.78(a)(2)(ii). In addition, the petition under 37 CFR 1.78(a)(3) must be accompanied by:

(1) the reference required by 35 U.S.C. 120 and 37 CFR 1.78(a)(2)(i) of the prior-filed application, unless previously submitted;
(2) the surcharge set forth in 37 CFR 1.17(t); and
(3) a statement that the entire delay between the date the claim was due under 37 CFR 1.78(a)(2)(ii) and the date the claim was filed was unintentional. The Director may require additional information where there is a question whether the delay was unintentional.

The petition complies with the requirements for a grantable petition under 37 CFR 1.78(a)(3) in that (1) a reference to the prior-filed nonprovisional application has been included in an

amendment to the first sentence of the specification following the title, as provided by 37 CFR 1.78(a)(2)(iii); (2) the surcharge fee required by 37 CFR 1.17(t) has been submitted; and (3) the petition contains a proper statement of unintentional delay. Accordingly, having found that the instant petition for acceptance of an unintentionally delayed claim for the benefit of priority under 35 U.S.C. 120 to the prior-filed nonprovisional application satisfies the conditions of 37 CFR 1.78(a)(3), the petition is granted.

***The granting of the petition to accept the delayed benefit claim to the prior-filed application under 37 CFR 1.78(a)(3) should not be construed as meaning that this application is entitled to the benefit of the prior-filed application. In order for this application to be entitled to the benefit of the prior-filed application, all other requirements under 35 U.S.C. 120 and 37 CFR 1.78(a)(1) and (a)(2) must be met. Similarly, the fact that the corrected Filing Receipt accompanying this decision on petition includes the prior-filed application should not be construed as meaning that applicant is entitled to the claim for benefit of priority to the prior-filed application noted thereon. Accordingly, the examiner will, in due course, consider this benefit claim and determine whether this application is entitled to the benefit of the earlier filing date.***

A corrected Filing Receipt, which includes the priority claim to the prior-filed nonprovisional application, accompanies this decision on petition.

Any inquiries concerning this decision may be directed to Bryan Lin at (571)272-3303. All other inquiries concerning either the examination procedures or status of the application should be directed to the Technology Center.

This matter is being referred to Technology Center Art Unit 1752 for appropriate action on the amendment filed November 29, 2006, including consideration by the examiner of applicant's entitlement to claim benefit of priority under 35 U.S.C. 120 to the prior-filed nonprovisional application.

Bryan Lin

Bryan Lin
Legal Examiner
Office of PCT Legal Administration

Boris Milef
Legal Examiner
Office of Petitions

ATTACHMENT: Corrected Filing Receipt

UNITED STATES PATENT AND TRADEMARK OFFICE

UNITED STATES DEPARTMENT OF COMMERCE
United States Patent and Trademark Office
Address: COMMISSIONER FOR PATENTS
P.O. Box 1450
Alexandria, Virginia 22313-1450
www.uspto.gov

| APPL NO. | FILING OR 371(c) DATE | ART UNIT | FIL FEE REC'D | ATTY.DOCKET NO | TOT CLMS | IND CLMS |
|---|---|---|---|---|---|---|
| 10/622,668 | 07/21/2003 | 1752 | 750 | FSF-031391 | 16 | 1 |

**CONFIRMATION NO. 3824**

**CORRECTED FILING RECEIPT**

*OC000000022813103*

37398
TAIYO CORPORATION
401 HOLLAND LANE
#407
ALEXANDRIA, VA 22314

Date Mailed: 03/08/2007

Receipt is acknowledged of this regular Patent Application. It will be considered in its order and you will be notified as to the results of the examination. Be sure to provide the U.S. APPLICATION NUMBER, FILING DATE, NAME OF APPLICANT, and TITLE OF INVENTION when inquiring about this application. Fees transmitted by check or draft are subject to collection. Please verify the accuracy of the data presented on this receipt. **If an error is noted on this Filing Receipt, please mail to the Commissioner for Patents P.O. Box 1450 Alexandria Va 22313-1450. Please provide a copy of this Filing Receipt with the changes noted thereon. If you received a "Notice to File Missing Parts" for this application, please submit any corrections to this Filing Receipt with your reply to the Notice. When the USPTO processes the reply to the Notice, the USPTO will generate another Filing Receipt incorporating the requested corrections (if appropriate).**

**Applicant(s)**

Yasuhiro Yoshioka, Kanagawa, JAPAN;
Toyohisa Oya, Kanagawa, JAPAN;

**Power of Attorney:**

Margaret Burke--34474
Sheldon Moss--52053

**Domestic Priority data as claimed by applicant**

This application is a CIP of 09/695,864 10/26/2000 PAT 6,696,237

**Foreign Applications**

JAPAN 2002-214209 07/23/2002

**If Required, Foreign Filing License Granted:** 03/17/2004

**The country code and number of your priority application, to be used for filing abroad under the Paris Convention, is US10/622,668**

**Projected Publication Date:** Not Applicable

**Non-Publication Request:** No

**Early Publication Request:** No

**Title**

Photothermographic material

**Preliminary Class**

430

## PROTECTING YOUR INVENTION OUTSIDE THE UNITED STATES

Since the rights granted by a U.S. patent extend only throughout the territory of the United States and have no effect in a foreign country, an inventor who wishes patent protection in another country must apply for a patent in a specific country or in regional patent offices. Applicants may wish to consider the filing of an international application under the Patent Cooperation Treaty (PCT). An international (PCT) application generally has the same effect as a regular national patent application in each PCT-member country. The PCT process **simplifies** the filing of patent applications on the same invention in member countries, but **does not result** in a grant of "an international patent" and does not eliminate the need of applicants to file additional documents and fees in countries where patent protection is desired.

Almost every country has its own patent law, and a person desiring a patent in a particular country must make an application for patent in that country in accordance with its particular laws. Since the laws of many countries differ in various respects from the patent law of the United States, applicants are advised to seek guidance from specific foreign countries to ensure that patent rights are not lost prematurely.

Applicants also are advised that in the case of inventions made in the United States, the Director of the USPTO must issue a license before applicants can apply for a patent in a foreign country. The filing of a U.S. patent application serves as a request for a foreign filing license. The application's filing receipt contains further information and guidance as to the status of applicant's license for foreign filing.

Applicants may wish to consult the USPTO booklet, "General Information Concerning Patents" (specifically, the section entitled "Treaties and Foreign Patents") for more information on timeframes and deadlines for filing foreign patent applications. The guide is available either by contacting the USPTO Contact Center at 800-786-9199, or it can be viewed on the USPTO website at http://www.uspto.gov/web/offices/pac/doc/general/index.html.

For information on preventing theft of your intellectual property (patents, trademarks and copyrights), you may wish to consult the U.S. Government website, http://www.stopfakes.gov. Part of a Department of Commerce initiative, this website includes self-help "toolkits" giving innovators guidance on how to protect intellectual property in specific countries such as China, Korea and Mexico. For questions regarding patent enforcement issues, applicants may call the U.S. Government hotline at 1-866-999-HALT (1-866-999-4158).

---

## LICENSE FOR FOREIGN FILING UNDER
## Title 35, United States Code, Section 184
## Title 37, Code of Federal Regulations, 5.11 & 5.15

**GRANTED**

The applicant has been granted a license under 35 U.S.C. 184, if the phrase "IF REQUIRED, FOREIGN FILING LICENSE GRANTED" followed by a date appears on this form. Such licenses are issued in all applications where the conditions for issuance of a license have been met, regardless of whether or not a license may be required as set forth in 37 CFR 5.15. The scope and limitations of this license are set forth in 37 CFR 5.15(a) unless an earlier license has been issued under 37 CFR 5.15(b). The license is subject to revocation upon written notification. The date indicated is the effective date of the license, unless an earlier license of similar scope has been granted

under 37 CFR 5.13 or 5.14.

This license is to be retained by the licensee and may be used at any time on or after the effective date thereof unless it is revoked. This license is automatically transferred to any related applications(s) filed under 37 CFR 1.53(d). This license is not retroactive.

The grant of a license does not in any way lessen the responsibility of a licensee for the security of the subject matter as imposed by any Government contract or the provisions of existing laws relating to espionage and the national security or the export of technical data. Licensees should apprise themselves of current regulations especially with respect to certain countries, of other agencies, particularly the Office of Defense Trade Controls, Department of State (with respect to Arms, Munitions and Implements of War (22 CFR 121-128)); the Bureau of Industry and Security, Department of Commerce (15 CFR parts 730-774); the Office of Foreign Assets Control, Department of Treasury (31 CFR Parts 500+) and the Department of Energy.

**NOT GRANTED**

No license under 35 U.S.C. 184 has been granted at this time, if the phrase "IF REQUIRED, FOREIGN FILING LICENSE GRANTED" DOES NOT appear on this form. Applicant may still petition for a license under 37 CFR 5.12, if a license is desired before the expiration of 6 months from the filing date of the application. If 6 months has lapsed from the filing date of this application and the licensee has not received any indication of a secrecy order under 35 U.S.C. 181, the licensee may foreign file the application pursuant to 37 CFR 5.15(b).

UNITED STATES PATENT AND TRADEMARK OFFICE

Commissioner for Patents
United States Patent and Trademark Office
P.O. Box 1450
Alexandria, VA 22313-1450
www.uspto.gov
DIW Jun-05

SHERIDAN ROSS PC
1560 BROADWAY
SUITE 1200
DENVER CO 80202

**COPY MAILED**

JUN 27 2005

**OFFICE OF PETITIONS**

| | | |
|---|---|---|
| In re Application of | : | |
| Johnson et al. | : | |
| Application No. 10/622,677 | : | DECISION ON PETITION |
| Filed: 18 July, 2003 | : | |
| Atty Docket No. 3971-13-CON | : | |

This is a decision on the petition filed on 29 April, 2005, under 37 CFR 1.137(b),[1] to revive the above-identified application.

The petition is **GRANTED**.

The application became abandoned on 7 April, 2005, for failure to file a proper reply to the final Office action mailed on 6 October, 2004, which set a three (3) month shortened statutory period for reply. On 31 March, 2005, petitioners filed a three (3) month extension of time and an amendment after final

---

[1] Effective December 1, 1997, the provisions of 37 CFR 1.137(b) now provide that where the delay in reply was unintentional, a petition may be filed to revive an abandoned application or a lapsed patent pursuant to 37 CFR 1.137(b). A grantable petition filed under the provisions of 37 CFR 1.137(b) must be accompanied by:

(1) the required reply, unless previously filed. In a nonprovisional application abandoned for failure to prosecute, the required reply may be met by the filing of a continuing application. In a nonprovisional utility or plant application filed on or after June 8, 1995, and abandoned for failure to prosecute, the required reply may also be met by the filing of a request for continuing examination in compliance with § 1.114. In an application or patent, abandoned or lapsed for failure to pay the issue fee or any portion thereof, the required reply must be the payment of the issue fee or any outstanding balance thereof.

(2) the petition fee as set forth in 37 CFR 1.17(m);

(3) a statement that the entire delay in filing the required reply from the due date for the reply until the filing of a grantable petition pursuant to 37 CFR 1.137(b) was unintentional. The Commissioner may required additional information where there is a question whether the delay was unintentional; and

(4) any terminal disclaimer (and fee as set forth in 37 CFR 1.20(d)) required pursuant to 37 CFR 1.137(c)).

rejection. The amendment did not place the case in condition for allowance, however, and an Advisory Action was mailed on 26 April, 2005. Notice of Abandonment was mailed on 16 May, 2005.

Petitioners have filed a Request for Continued Examination (RCE) and have indicated that the previously filed amendment is the submission required under 37 CFR 1.114.

The statement contained in the instant petition does not set forth that the entire delay from the due date of the required reply to the date of the filing of a grantable petition was unintentional as required by 37 CFR 1.137(b)(3). However, the statement contained in the instant petition is being so construed. Petitioner **must** notify the Office if this is not a correct interpretation.

This application is being referred to Technology Center Art Unit 3749 for further processing.

Telephone inquiries concerning this matter may be directed to the undersigned at (571)272-3231.

D Wood

Douglas I. Wood
Senior Petitions Attorney
Office of Petitions

UNITED STATES PATENT AND TRADEMARK OFFICE

COMMISSIONER FOR PATENTS
UNITED STATES PATENT AND TRADEMARK OFFICE
P.O. BOX 1450
ALEXANDRIA, VA 22313-1450
www.uspto.gov

Patrick G. Burns, Esq.
GREER, BURNS & CRAIN, LTD.
Suite 2500
300 South Wacker Dr.
Chicago, IL 60606

COPY MAILED
OCT 1 1 2005
OFFICE OF PETITIONS

| | | |
|---|---|---|
| In re Application of | : | |
| Tetsuya Kida, et. al. | : | |
| Application No. 10/622,688 | : | ON PETITION |
| Filed: July 18, 2003 | : | |
| Attorney Docket No. 1508.68156 | : | |

This is a decision on the petition, filed by facsimile transmission on August 30, 2005, which is being treated as a request under 37 CFR 3.81(b)[1] to correct the assignee's name on the Fee(s) Transmittal form PTOL-85(b) so that the Letters Patent will issue to the assignee.

The request is **DISMISSED**.

Petitioner states that the correct assignee's name is "Sharp Kabushiki Kaisha" and that an incorrect assignee's name was unintentionally included on the Fee(s) Transmittal form PTOL-85(b) at the time of payment of the issue fee. Accordingly, petitioner requests that the patent issue to "Sharp Kabushiki Kaisha".

37 CFR 3.81(b), effective June 25, 2004, reads:

> *After payment of the issue fee:* Any request for issuance of an application in the name of the assignee submitted after the date of payment of the issue fee, and any request for a patent to be corrected to state the name of the assignee, must state that the assignment was submitted for recordation as set forth in § 3.11 before issuance of the patent, and must include a request for a certificate of correction

[1] *See* Official Gazette of June 22, 2004

> under § 1.323 of this chapter (accompanied by the fee set forth in § 1.20(a) and the processing fee set forth in § 1.17(i) of this chapter.

The request under 37 CFR 3.81(b) was not accompanied by a request for a certificate of correction (and fee) as required by 3.81(b). As petitioner has failed to comply with the provisions of 37 CFR 3.81(b), the request cannot be granted at this time.

A review of Office database assignment records reflects that an assignment to "Sharp Kabushiki Kaisha" has been recorded. Therefore, upon submission of the required certificate of correction and fee, it would be appropriate for the Office to issue a certificate of correction to correct the front page of the Letters Patent to reflect that "Sharp Kabushiki Kaisha" was the assignee of record at the time of issuance of the application into a patent. *Note also* 35 U.S.C. § 152.

In view of the above and **after issuance of this application into a patent, the Certificates of Correction Branch is instructed to issue a certificate of correction upon submission by petitioner of a request for a certificate of correction (and fee) which sets forth "Sharp Kabushiki Kaisha", as the assignee**. *No certificate of correction will be issued which sets forth an assignee other than the assignee set forth in this request. A copy of this decision* ***must*** *accompany the request for a Certificate of Correction.*

No further renewed request under 37 CFR 3.81(b) is necessary for consideration by the Office of Petitions for issuance of a certificate of correction in the name of the assignee set forth in this request, as this decision operates as an instruction to the Certificates of Correction Branch to issue the requested certificate of correction.

Alternatively, if petitioner desires to have the correct assignee data appear on the front page of the Letters Patent, petitioner may wish to consider filing a petition to withdraw the subject application from issue under 37 CFR 1.313(c)(2). The petition to withdraw from issue under 37 CFR 1.313(c)(2) must be accompanied by a request for continued examination (RCE) and submission (which may be a request under 37 CFR 3.81(b)).

Inquiries concerning this decision should be directed to the undersigned at (571) 272-3226. Any questions concerning issuance of a certificate of correction should be directed to the Certificates of Correction Branch at (703) 305-8309.

Andrea Smith
Office of Petitions

UNITED STATES PATENT AND TRADEMARK OFFICE

Commissioner for Patents
United States Patent and Trademark Office
P.O. Box 1450
Alexandria, VA 22313-1450
www.uspto.gov

STERNE KESSLER GOLDSTEIN & FOX, P.L.L.C.
1100 NEW YORK AVENUE, N.W.
WASHINGTON, D.C. 20005-3934

COPY MAILED

JAN 21 2005

OFFICE OF PETITIONS

ON PETITION

In re Application of :
Kwang Y. Kim :
Application No. 10/622,708 :
Filed: July 21, 2003 :
Attorney Docket No. 1875.1710002

This is a decision on the petition, filed January 19, 2005, under 37 CFR 1.313(c)(2) to withdraw the above-identified application from issue after payment of the issue fee.

The petition is **GRANTED**.

The above-identified application is withdrawn from issue for consideration of a submission under 37 CFR 1.114 (request for continued examination). See 37 CFR 1.313(c)(2).

**Petitioner is advised that the issue fee paid on September 17, 2004 in the above-identified application cannot be refunded. If, however, the above-identified application is again allowed, petitioner may request that it be applied towards the issue fee required by the new Notice of Allowance.**[1]

Telephone inquiries should be directed to Irvin Dingle at (571) 272-3210.

This matter will be forwarded to Technology Center AU 2816 for processing of the request for continued examination under 37 CFR 1.114 and for consideration of the concurrently filed Information Disclosure Statement.

Irvin Dingle
Petitions Examiner
Office of Petitions
Office of the Deputy Commissioner
for Patent Examination Policy

[1] The request to apply the issue fee to the new Notice may be satisfied by completing and returning the new Issue Fee Transmittal Form PTOL-85(b), which includes the following language thereon: Commissioner for Patents is requested to apply the Issue Fee and Publication Fee (if any) or re-apply any previously paid issue fee to the application identified above. Petitioner is advised that, whether a fee is indicated as being due or not, the Issue Fee Transmittal Form **must** be completed and timely submitted to avoid abandonment. Note the language in bold text on the first page of the Notice of Allowance and Fee(s) Due (PTOL-85).

UNITED STATES PATENT AND TRADEMARK OFFICE

Commissioner for Patents
United States Patent and Trademark Office
P.O. Box 1450
Alexandria, VA 22313-1450
www.uspto.gov

Sheldon J. Moss
c/o Yumi Yerks
Apartment #412-North
2111 Jefferson Davis Highway
Arlington VA 22202

COPY MAILED

APR 19 2005

OFFICE OF PETITIONS

| | |
|---|---|
| In re Application of | : |
| Ikeda et al. | : |
| Application No. 10/622,746 | : DECISION ON PETITION |
| Filed: 21 July, 2003 | : UNDER 37 CFR 1.78(a)(3) |
| Attorney Docket No. FSF-03511 | : |

This is a decision on the petition under 37 CFR 1.78(a)(3), filed 29 December, 2004, to accept an unintentionally delayed claim under 35 U.S.C. § 120 for the benefit of priority to the prior-filed nonprovisional application set forth in the amendment filed concurrently with the instant petition.

The petition is **GRANTED**.

A petition for acceptance of a claim for late priority under 37 CFR 1.78(a)(3) is only applicable to those applications filed on or after November 29, 2000. Further, the petition is appropriate only after the expiration of the period specified in 37 CFR 1.78(a)(2)(ii). In addition, the petition under 37 CFR 1.78(a)(3) must be accompanied by:

**(1)** the reference required by 35 U.S.C. § 120 and 37 CFR 1.78(a)(2)(i) of the prior-filed application, unless previously submitted;

**(2)** the surcharge set forth in § 1.17(t); and

**(3)** a statement that the entire delay between the date the claim was due under 37 CFR 1.78(a)(2)(ii) and the date the claim was filed was unintentional. The Commissioner may require additional information where there is a question whether the delay was unintentional.

The instant nonprovisional application was filed after 29 November, 2000, and the claim herein for the benefit of priority to the prior-filed nonprovisional application is submitted after expiration of the period specified in 37 CFR 1.78(a)(2)(ii). Therefore, this is a proper petition

under 37 CFR 1.78(a)(3).

The petition complies with the requirements for a grantable petition under 37 CFR 1.78(a)(3) in that (1) a reference to the above-noted, prior-filed nonprovisional application has been included in an amendment to the first sentence of the specification following the title, as provided by 37 CFR 1.78(a)(2)(iii); (2) the surcharge fee required by 37 CFR 1.17(t) has been submitted; and (3) the petition contains a proper statement of unintentional delay. Accordingly, having found that the instant petition for acceptance of an unintentionally delayed claim for the benefit of priority under 35 U.S.C. § 120 to the prior-filed nonprovisional application satisfies the conditions of 37 CFR 1.78(a)(3), the petition is granted.

***The granting of the petition to accept the delayed benefit claim to the prior-filed application under 37 CFR 1.78(a)(3) should not be construed as meaning that the instant application is entitled to the benefit of the prior-filed application. In order for the instant application to be entitled to the benefit of the prior-filed application, all other requirements under 35 U.S.C. § 120 and 37 CFR 1.78(a)(1) and (a)(2) must be met. Similarly, the fact that the corrected Filing Receipt accompanying this decision on petition includes the prior-filed application should not be construed as meaning that applicant is entitled to the claim for benefit of priority to the prior-filed application noted thereon. Accordingly, the examiner will, in due course, consider this benefit claim and determine whether the instant application is entitled to the benefit of the earlier filing date.***

A corrected Filing Receipt, which includes the priority claim to the prior-filed nonprovisional application, accompanies this decision on petition.

Any inquiries concerning this decision may be directed to Senior Petitions Attorney Douglas I. Wood at (571) 272-3231.

This application is being referred to Technology Center Art Unit 1755 for appropriate action on the amendment filed 29 December, 2004, including consideration by the examiner of applicant's entitlement to claim benefit of priority under 35 U.S.C. § 120 to the prior-filed nonprovisional application.

Frances Hicks

Frances Hicks
Lead Petitions Examiner
Office of Petitions
Office of the Deputy Commissioner
for Patent Examination Policy

**ATTACHMENT**: Corrected Filing Receipt

UNITED STATES PATENT AND TRADEMARK OFFICE

Commissioner for Patents
United States Patent and Trademark Office
P.O. Box 1450
Alexandria, VA 22313-1450
www.uspto.gov

**TREXLER, BUSHNELL, GIANGIORGI,**
**BLACKSTONE & MARR, LTD.**
**105 WEST ADAMS STREET**
**SUITE 3600**
**CHICAGO, IL 60603**

COPY MAILED

AUG 0 1 2005

OFFICE OF PETITIONS

| | | |
|---|---|---|
| In re Application of | : | |
| Daniel J. Smith et al | : | |
| Application No. 10/622,755 | : | DECISION GRANTING PETITION |
| Filed: July 18, 2003 | : | UNDER 37 CFR 1.55(c) |
| Attorney Docket No. 1171/39359A | : | |

This is a decision on the petition filed February 17, 2005, which is being treated as a petition under 37 CFR 1.55(c) requesting acceptance of an unintentionally delayed claim under 35 USC 119(a) through (d) for benefit of the filing date of foreign New Zealand Application No. 509041, filed December 20, 2000.

A petition for acceptance of a claim for foreign priority under 37 CFR 1.55(c) is only applicable to those applications filed on or after November 29, 2000. Further, the nonprovisional application must be filed within 12 months of the filing date of the foreign application. In addition, a petition under 37 CFR 1.55(c) to accept an unintentionally delayed claim for priority under 35 U.S.C. § 119(a)-(d) must be accompanied by:

> (1) the claim under 35 U.S.C. §119(a)-(d) to the prior foreign application, unless previously submitted;[1]
>
> (2) the surcharge set forth in § 1.17(t); and
>
> (3) a statement that the entire delay between the date the claim was due and the date the claim was filed was unintentional. The Commissioner may require additional information where there is a question whether the delay was unintentional.

The instant pending nonprovisional application was filed after November 29, 2000, and did not include a reference to the foreign application, for which benefit is now sought, within the later of four months from the actual filing date of the application

---

[1] The claim must identify in the oath or declaration the foreign application for which priority is claimed, as well as any foreign application for the same subject matter and having a filing date before that of the application for which priority is claimed, by specifying the application number, country, and the filing date. *Note* also 37 CFR 1.63(c)(2).

or sixteen months from the filing date of the prior foreign application. Therefore, since the claim for priority is submitted after the period specified in 37 CFR 1.55(a)(1)(i), this is an appropriate petition under the provisions of 37 CFR 1.55(c).

The above-identified pending nonprovisional application was filed on July 18, 2003, which is after November 29, 2000. Intermediate Application No. 09/850,797 was filed within 12 months of December 20, 2000 (the filing date of the foreign application to which benefit is now being claimed). On February 17, 2005, an application data sheet was received which identifies the foreign application for which priority is claimed by application number, country and filing date. The required petition fee of $1370 was received with the petition. Lastly, petitioner has provided an adequate statement of unintentional delay.

All requirements being met, the petition under 37 CFR 1.55(c) to accept an unintentionally delayed claim for priority under 35 U.S.C. § 119(a) through (d) is **granted.**

A corrected filing receipt accompanies this decision on petition.

This application is being forwarded to Technology Center AU 3743 for examination in due course and for consideration by the examiner of record of the foreign priority claim under 35 U.S.C. § 119(a) through (d) and 37 CFR 1.55(c). **The examiner will determine whether the certified copies are present in the prior-filed parent application.**

Any inquiries directly pertaining to this matter may be directed to the undersigned at (571) 272-3208.

Karen Creasy

Karen Creasy
Petitions Examiner
Office of Petitions
Office of the Deputy Commissioner
for Patent Examination Policy

ATTACHMENT: Filing Receipt

SPE RESPONSE FOR CERTIFICATE OF CORRECTION

Paper No.: ____

DATE : 2-27-07

TO SPE OF : ART UNIT 3743

SUBJECT : Request for Certificate of Correction on Patent No.: 7140366

A response is requested with respect to the accompanying request for a certificate of correction:

Please complete this form and return with file, within 7 days to:
Certificates of Correction Branch - PK 3-915
Palm location 7580 - Tel. No. 305-8309

With respect to the change(s) requested, correcting Office and/or Applicant's errors, should the patent read as shown in the certificate of correction? No new matter should be introduced, nor should the scope or meaning of the claims be changed.

Claim 18

Thank You For Your Assistance

E. James
Certificates of Correction Branch

The request for issuing the above-identified correction(s) is hereby:
Note your decision on the appropriate box.

- ☐ Approved — All changes apply.
- ☐ Approved in Part — Specify below which changes do not apply.
- ☐ Denied — State the reasons for denial below.

Comments:

SPE

Art Unit

PTOL-306 (REV. 7/03)

U.S. DEPARTMENT OF COMMERCE Patent and Trademark

BEST AVAILABLE COPY

Best Available Copy

## SPE RESPONSE FOR CERTIFICATE OF CORRECTION

Paper No.: ____

DATE : 2-27-07

TO SPE OF : ART UNIT 3743

SUBJECT : Request for Certificate of Correction on Patent No.: 7140366

A response is requested with respect to the accompanying request for a certificate of correction.

Please complete this form and return with file, within 7 days to:
Certificates of Correction Branch - PK 3-915
Palm location 7580 - Tel. No. 305-8309

With respect to the change(s) requested, correcting Office and/or Applicant's errors, should the patent read as shown in the certificate of correction? No new matter should be introduced, nor should the scope or meaning of the claims be changed.

Claim 18

Thank You For Your Assistance

E. James
Certificates of Correction Branch

The request for issuing the above-identified correction(s) is hereby:
Note your decision on the appropriate box.

- ☐ Approved — All changes apply.
- ☐ Approved in Part — Specify below which changes do not apply.
- ☐ Denied — State the reasons for denial below.

Comments:

SPE

3771
Art Unit

PTOL-306 (REV. 7/03) U.S. DEPARTMENT OF COMMERCE Patent and Trademark

BEST AVAILABLE COPY

UNITED STATES PATENT AND TRADEMARK OFFICE

Commissioner for Patents
United States Patent and Trademark Office
P.O. Box 1450
Alexandria, VA 22313-1450
www.uspto.gov

James J. Barta, Jr.
Senniger, Powers, Leavitt & Roedel
One Metropolitan Square, 16th Floor
St. Louis, MO 63102

**COPY MAILED**

OCT 0 7 2004

**OFFICE OF PETITIONS**

In re Application of :
Plastina et al. :
Application No. 10/622,767 :
Filed: July 18, 2003 :
Attorney Docket No. MS#303015.01 (5052) :

ON PETITION

This is a decision on the petition filed August 10, 2004, to accept the application papers filed with the petition and to accord the above-identified application a filing date of July 18, 2003.

The petition is **granted**.

37 CFR 1.10(e) states:

> Any person mailing correspondence addressed as set out in Section 1.1(a) to the Office with sufficient postage utilizing the "Express Mail Post Office to Addressee" service of the USPS but not received by the Office, may petition the Commissioner to consider such correspondence filed in the Office on the USPS deposit date, provided that:
> (1) The petition is filed promptly after the person becomes aware that the Office has no evidence of receipt of the correspondence;
> (2) The number of the "Express Mail" mailing label was placed on the paper(s) or fee(s) that constitute the correspondence prior to the original mailing by "Express Mail";
> (3) The petition includes a copy of the originally deposited paper(s) or fee(s) that constitute the correspondence showing the number of the "Express Mail" mailing label thereon, a copy of any returned postcard receipt, a copy of the "Express Mail" mailing label showing the "date-in," a copy of any other official notation by the USPS relied upon to show the date of deposit, and, if the requested filing date is a date other than the "date-in" on the "Express Mail" mailing label or other official notation entered by the USPS, a showing pursuant to paragraph (d)(3) of this section that the requested filing date was the date the correspondence was deposited in the "Express Mail Post Office to Addressee" service prior to the last scheduled pickup for that day; and
> (4) The petition includes a statement which establishes, to the satisfaction of the Commissioner, the original deposit of the correspondence and that the copies of the correspondence, the copy of the "Express Mail" mailing label, the copy of any returned postcard receipt, and any official notation entered by the USPS are true copies of the originally mailed correspondence, original "Express Mail" mailing label, returned postcard receipt, and official notation entered by the USPS.

All of the above requirements have been met.

A fee is unnecessary for a petition under 37 CFR 1.10(e). Therefore, the voided check for $130 is being returned along with this decision.

The Office of Initial Patent Examination will process the application with a filing date of July 18, 2003, using the papers filed on August 10, 2004. OIPE should note that RAM (our finance system) indicates receipt of $1,498 with the original application and OIPE should ensure PALM lists the $1,498 payment.

Telephone inquiries may be directed to Petitions Attorney Steven Brantley at (571) 272-3203.

Charles Steven Brantley
Petitions Attorney
Office of Petitions

Attached: Voided $130 check

UNITED STATES PATENT AND TRADEMARK OFFICE

COMMISSIONER FOR PATENTS
UNITED STATES PATENT AND TRADEMARK OFFICE
P.O. BOX 1450
ALEXANDRIA, VA 22313-1450
WWW.USPTO.GOV

Paper No. None

POSZ LAW GROUP, PLC
12040 SOUTH LAKES DRIVE
SUITE 101
RESTON VA 20191

COPY MAILED
SEP 12 2007
OFFICE OF PETITIONS

| | | |
|---|---|---|
| In re Application of | : | |
| Hiroyuki Hagano et al. | : | |
| Application No. 10/622,776 | : | DECISION ON PETITION |
| Filed: July 21, 2003 | : | PURSUANT TO |
| Attorney Docket No. 26D-010 | : | 37 C.F.R. § 1.181(A) |
| Title: RESIN MEMBER AND METHOD | : | |
| OF MANUFACTURING THE SAME | : | |

## BACKGROUND

This is a decision on the petition pursuant to 37 C.F.R. § 1.181(a), filed June 13, 2007, to withdraw the holding of abandonment.

The above-identified application became abandoned for failure to submit the issue and publication fees in a timely manner in reply to the Notice of Allowance and Issue Fee Due, mailed January 24, 2007, which set a shortened statutory period for reply of three months. No extensions of time are permitted for transmitting issue or publication fees[1]. Accordingly, the above-identified application became abandoned on April 25, 2007. A Notice of Abandonment was mailed on May 23, 2007.

## RELEVANT PORTION OF THE MPEP

MPEP §711.03(c)(I)(A) sets forth, *in toto*:

> In Delgar v. Schulyer, 172 USPQ 513 (D.D.C. 1971), the court decided that the Office should mail a new Notice of Allowance in view of the evidence presented in support of the contention that the applicant's representative did not receive the original Notice of Allowance. Under the reasoning of Delgar, an allegation that an Office action was never received may be considered in a

1 See MPEP § 710.02(e).

petition to withdraw the holding of abandonment. If adequately supported, the Office may grant the petition to withdraw the holding of abandonment and remail the Office action. That is, the reasoning of Delgar is applicable regardless of whether an application is held abandoned for failure to timely pay the issue fee ( 35 U.S.C. 151) or for failure to prosecute ( 35 U.S.C. 133).

To minimize costs and burdens to practitioners and the Office, the Office has modified the showing required to establish nonreceipt of an Office action. The showing required to establish nonreceipt of an Office communication must include a statement from the practitioner stating that the Office communication was not received by the practitioner and attesting to the fact that a search of the file jacket and docket records indicates that the Office communication was not received. A copy of the docket record where the nonreceived Office communication would have been entered had it been received and docketed must be attached to and referenced in practitioner's statement (emphasis added). For example, if a three month period for reply was set in the nonreceived Office action, a copy of the docket report showing all replies docketed for a date three months from the mail date of the nonreceived Office action must be submitted as documentary proof of nonreceipt of the Office action.

The showing outlined above may not be sufficient if there are circumstances that point to a conclusion that the Office action may have been lost after receipt rather than a conclusion that the Office action was lost in the mail (e.g., if the practitioner has a history of not receiving Office actions).

Evidence of nonreceipt of an Office communication or action (e.g., Notice of Abandonment or an advisory action) other than that action to which reply was required to avoid abandonment would not warrant withdrawal of the holding of abandonment. Abandonment takes place by operation of law for failure to reply to an Office action or timely pay the issue fee, not by operation of the mailing of a Notice of Abandonment. See Lorenz v. Finkl, 333 F.2d 885, 889-90, 142 USPQ 26, 29-30 (CCPA 1964); Krahn v. Commissioner, 15 USPQ2d 1823, 1824 (E.D. Va 1990); In re Application of Fischer, 6 USPQ2d 1573, 1574 (Comm'r Pat. 1988).

## ANALYSIS

The showing in the present petition is not sufficient to withdraw the holding of abandonment because it is incomplete.

Petitioner has included a statement that a thorough search of the file jacket and docket records were conducted.

Petitioner has further included a copy of a screenshot of the "Posz Law Group Case Tracking System," which serves as the docket record where the non-received Office communication would have been entered and docketed, however **the copy of the docket record that was provided is not legible**. The copy is rather dark, and the text that appears within the same cannot be discerned. As such, it does not appear that the copy that Petitioner has submitted in electronically reproducible. A copy of the submission as it appears in the electronic file has been included with this decision.

It follows that the present petition must be **DISMISSED.**

CONCLUSION

Any reply must be submitted within **TWO MONTHS** from the mail date of this decision. Extensions of time under 37 C.F.R. § 1.136(a) are permitted. The reply should include a cover letter entitled "Renewed Petition Under 37 C.F.R. § 1.181(a)." This is not a final agency action within the meaning of 5 U.S.C § 704. The renewed petition should indicate in a prominent manner that the attorney handling this matter is Paul Shanoski, and may be submitted by mail[2], hand-delivery[3], or facsimile[4]. Registered users of EFS-Web may alternatively submit a response to this decision via EFS-Web[5]. **On renewed petition, Petitioner may wish to consider submitting a lighter copy of this docket record.**

If responding by mail, Petitioner is advised not to place the undersigned's name on the envelope. Only the information that appears in the footnote should be included - adding anything else to the address will delay the delivery of the response to the undersigned.

Telephone inquiries **regarding this decision** should be directed to the undersigned at (571) 272-3225[6]. All other inquiries concerning examination procedures or status of the application should be directed to the Technology Center.

Paul Shanoski
Senior Attorney
Office of Petitions
United States Patent and Trademark Office

Encl. Copy of docket record as it appears in the electronic file

---

2 Mail Stop Petition, Commissioner for Patents, United States Patent and Trademark Office, P.O. Box 1450, Alexandria, VA, 22313-1450.
3 Customer Window, Randolph Building, 401 Dulaney Street, Alexandria, VA, 22314.
4 (571) 273-8300- please note this is a central facsimile number.
5 https://sportal.uspto.gov/authenticate/authenticateuserlocalepf.html
6 Petitioner will note that all practice before the Office should be in writing, and the action of the Office will be based exclusively on the written record in the Office. See 37 C.F.R. § 1.2. As such, Petitioner is reminded that no telephone discussion may be controlling or considered authority for any further action(s) of Petitioner.

RECEIVED
CENTRAL FAX CENTER
JUN 1 3 2007

IN THE UNITED STATES PATENT AND TRADEMARK OFFICE

| | |
|---|---|
| Applicant(s): HAGANO | Atty. Dkt.: 26D-010-RCE |
| Serial No.: 10/622,776 | Group Art Unit: 1751 |
| Filed: July 21, 2003 | Examiner: Mark Kopec |
| Title: RESIN MEMBER AND METHOD OF MANUFACTURING THE SAME | **Date of Allowance: January 24, 2007**<br>**Confirmation No.: 4241** |

Attn: PETITIONS BRANCH
Commissioner for Patents
Alexandria, VA 22314

Date: June 13, 2007

**EXHIBIT A**

**Posz Law Group Case Tracking System**

The Notice of Allowance would have been entered here if it had been received and docketed.

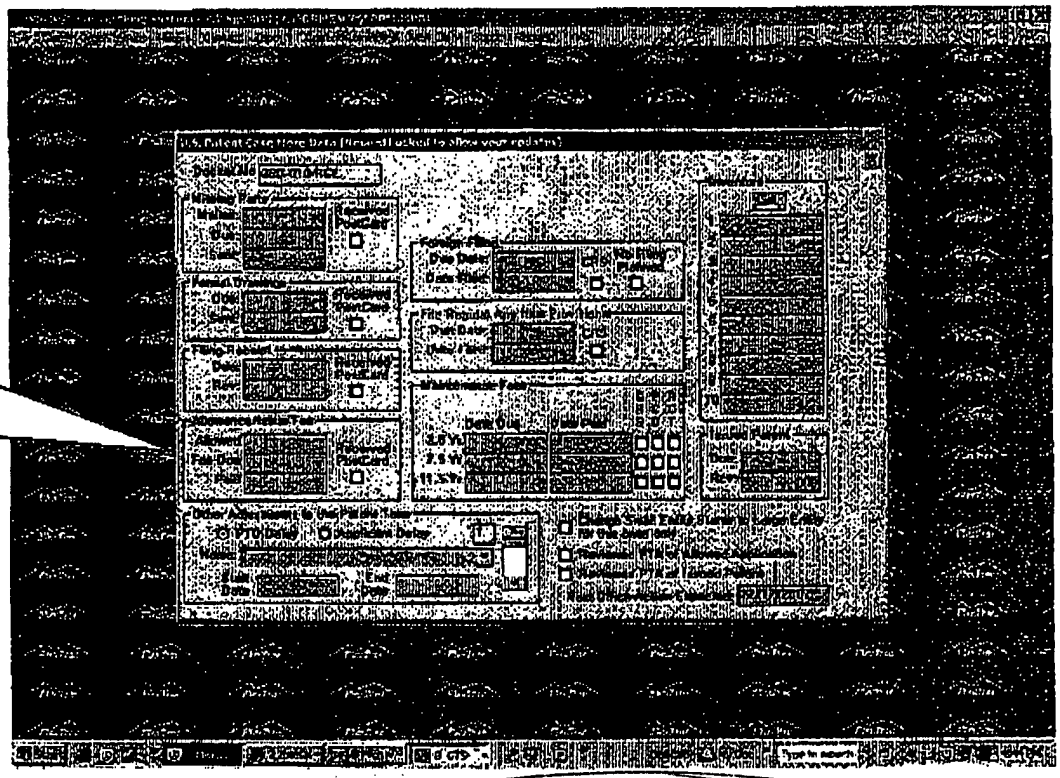

Copy of docket record as it appears in the electronic file

UNITED STATES PATENT AND TRADEMARK OFFICE

COMMISSIONER FOR PATENTS
UNITED STATES PATENT AND TRADEMARK OFFICE
P.O. BOX 1450
ALEXANDRIA, VA 22313-1450
WWW.USPTO.GOV

Paper No. None

POSZ LAW GROUP, PLC
12040 SOUTH LAKES DRIVE
SUITE 101
RESTON VA 20191

COPY MAILED

OCT 26 2007

OFFICE OF PETITIONS

| | | |
|---|---|---|
| In re Application of | : | |
| Hiroyuki Hagano et al. | : | |
| Application No. 10/622,776 | : | DECISION ON RENEWED |
| Filed: July 21, 2003 | : | PETITION PURSUANT TO |
| Attorney Docket No. 26D-010 | : | 37 C.F.R. § 1.181(A) |
| Title: RESIN MEMBER AND METHOD | : | |
| OF MANUFACTURING THE SAME | : | |

This is a decision on the renewed petition pursuant to 37 C.F.R. § 1.181(a), filed September 20, 2007, to withdraw the holding of abandonment.

## BACKGROUND

The above-identified application became abandoned for failure to submit the issue and publication fees in a timely manner in reply to the Notice of Allowance and Issue Fee Due, mailed January 24, 2007, which set a shortened statutory period for reply of three months. No extensions of time are permitted for transmitting issue or publication fees[1]. Accordingly, the above-identified application became abandoned on April 25, 2007. A Notice of Abandonment was mailed on May 23, 2007.

An original petition was filed on June 13, 2007, and was dismissed via the mailing of a decision on September 12, 2007 for failure to establish non-receipt of the Office communication.

1 See MPEP § 710.02(e).

## RELEVANT PORTION OF THE MPEP

MPEP §711.03(c)(I)(A) sets forth, *in toto*:

> In Delgar v. Schulyer, 172 USPQ 513 (D.D.C. 1971), the court decided that the Office should mail a new Notice of Allowance in view of the evidence presented in support of the contention that the applicant's representative did not receive the original Notice of Allowance. Under the reasoning of Delgar, an allegation that an Office action was never received may be considered in a petition to withdraw the holding of abandonment. If adequately supported, the Office may grant the petition to withdraw the holding of abandonment and remail the Office action. That is, the reasoning of Delgar is applicable regardless of whether an application is held abandoned for failure to timely pay the issue fee ( 35 U.S.C. 151) or for failure to prosecute ( 35 U.S.C. 133).
> To minimize costs and burdens to practitioners and the Office, the Office has modified the showing required to establish nonreceipt of an Office action. The showing required to establish nonreceipt of an Office communication must include a statement from the practitioner stating that the Office communication was not received by the practitioner and attesting to the fact that a search of the file jacket and docket records indicates that the Office communication was not received. A copy of the docket record where the nonreceived Office communication would have been entered had it been received and docketed must be attached to and referenced in practitioner's statement (emphasis added). For example, if a three month period for reply was set in the nonreceived Office action, a copy of the docket report showing all replies docketed for a date three months from the mail date of the nonreceived Office action must be submitted as documentary proof of nonreceipt of the Office action.
> The showing outlined above may not be sufficient if there are circumstances that point to a conclusion that the Office action may have been lost after receipt rather than a conclusion that the Office action was lost in the mail (e.g., if the practitioner has a history of not receiving Office actions).
> Evidence of nonreceipt of an Office communication or action (e.g., Notice of Abandonment or an advisory action) other than that action to which reply was required to avoid abandonment would not warrant withdrawal of the holding of abandonment. Abandonment takes place by operation of law for failure to reply to an Office action or timely pay the issue fee, not by operation of the mailing of a Notice of Abandonment. See Lorenz v. Finkl, 333 F.2d 885, 889-90, 142 USPQ 26, 29-30 (CCPA 1964); Krahn v. Commissioner, 15 USPQ2d 1823, 1824 (E.D. Va 1990); In re Application of Fischer, 6 USPQ2d 1573, 1574 (Comm'r Pat. 1988).

## ANALYSIS

The showing in this renewed petition is not sufficient to withdraw the holding of abandonment because Petitioner has again failed to establish non-receipt of the Office communication.

With the original petition, Petitioner included a statement that a thorough search of the file jacket and docket records was conducted. Petitioner further included a copy of a screenshot of the "Posz Law Group Case Tracking System," which was asserted to serve as the docket record where the non-received Office

communication would have been entered and docketed, had it been received. The docket record that was provided with the original petition was not legible.

With this renewed petition, Petitioner has submitted a legible copy of the docket record.

The submission has been reviewed, and it does not appear that this submission comprises a docket record where the nonreceived Office communication would have been entered had it been received and docketed. The electronic file has been reviewed, and it is clear that a Notice to File Missing Parts of Nonprovisional Application was mailed on November 17, 2003, a Restriction Requirement was mailed on October 7, 2005, a non-final Office action was mailed on January 18, 2006, and a Final Office action was mailed on July 18, 2006; yet **none of these mailings appear in the docket record**. As such, the "Posz Law Group Case Tracking System" does not comprise a docket record where the nonreceived Office communication would have been entered had it been received and docketed.

This screenshot contains a section that is entitled "Allowance/Issue Fee," and contains fields entitled "Allowed," "Fee Due," "Paid," and "Received Postcard." Each of these fields is blank, and Petitioner has placed a notation on this screenshot that reads "the notice of allowance would have been entered here if it had been received and docketed." However, it does not appear that this is necessarily the case: the screenshot also contains a section entitled "Missing Parts," and each of the fields that are entitled "mailed," "due," and "sent" are blank, however there is no doubt that the Notice of Missing Parts was received; on November 17, 2003 a response to this mailing, executed by Petitioner, was received in the Office. Consequently, it does not appear that all Office communications that are received are entered and docketed into the "Posz Law Group Case Tracking System."

It follows that the present petition must be **DISMISSED**.

**It does not appear that Petitioner will be able to meet the requirements of Delgar. As such, Petitioner may wish to strongly consider filing a petition under 37 C.F.R. §§ 1.137(a) and/or (b).**

## CONCLUSION

Any reply must be submitted within **TWO MONTHS** from the mail date of this decision. Extensions of time under 37 C.F.R. § 1.136(a) are permitted. The reply should include a cover letter entitled "Renewed Petition Under 37 C.F.R. § 1.181(a) and/or Petition Under 37 C.F.R. § 1.137(a) and/or (b)." This is not a final agency action within the meaning of 5 U.S.C § 704. The renewed petition should indicate in a prominent manner that the attorney handling this matter is Paul Shanoski, and may be submitted by mail[2], hand-delivery[3], or facsimile[4]. Registered users of EFS-Web may alternatively submit a response to this decision via EFS-Web[5].

**NOTICE:**

**Thereafter, there will be no further reconsideration of this matter[6, 7].**

**Petitioner's only relief is a petition under 37 C.F.R. §§ 1.137(a) and/or (b), and - having been made aware of this reality - any delay in promptly seeking relief under 37 C.F.R. § 1.137 may be considered evidence of intentional delay and an absolute bar to revival.**

If responding by mail, Petitioner is advised not to place the undersigned's name on the envelope. Only the information that appears in the footnote should be included - adding anything else to the address will delay the delivery of the response to the undersigned.

---

2 Mail Stop Petition, Commissioner for Patents, United States Patent and Trademark Office, P.O. Box 1450, Alexandria, VA, 22313-1450.
3 Customer Window, Randolph Building, 401 Dulaney Street, Alexandria, VA, 22314.
4 (571) 273-8300- please note this is a central facsimile number.
5 https://sportal.uspto.gov/authenticate/authenticateuserlocalepf.html
6 For more than a century, punctuality and due diligence, equally with good faith, have been deemed essential requisites to the success of those who seek to obtain the special privileges of the patent law, and they are demanded in the interest of the public and for the protection of rival inventors. See: Porter v. Louden, 7 App.D.C. 64 (C.A.D.C. 1895), citing Wollensak v. Sargent, 151 U.S. 221, 228, 38 L. Ed. 137, 14 S. Ct. 291 (1894). An invention benefits no one unless it is made public, and the rule of diligence should be so applied as to encourage reasonable promptness in conferring this benefit upon the public. Automatic Electric Co. v. Dyson, 52 App. D.C. 82; 281 F. 586 (C.A.D.C. 1922). Generally, 35 U.S.C. §6; 37 C.F.R.§§1.181, 182, 183.
7 If, on the second request for reconsideration, Petitioner fails to satisfy the showings burden required: (a) the resulting decision may be one viewed as final agency action; and (b) provisions for reconsideration, such as those at 37 C.F.R. §1.137(e), will **not** apply to that decision.

Telephone inquiries **regarding this decision** should be directed to the undersigned at (571) 272-3225[8]. All other inquiries concerning examination procedures or status of the application should be directed to the Technology Center.

Paul Shanoski
Senior Attorney
Office of Petitions
United States Patent and Trademark Office

---

8 Petitioner will note that all practice before the Office should be in writing, and the action of the Office will be based exclusively on the written record in the Office. See 37 C.F.R. § 1.2. As such, Petitioner is reminded that no telephone discussion may be controlling or considered authority for any further action(s) of Petitioner.

UNITED STATES PATENT AND TRADEMARK OFFICE

COMMISSIONER FOR PATENTS
UNITED STATES PATENT AND TRADEMARK OFFICE
P.O. BOX 1450
ALEXANDRIA, VA 22313-1450
WWW.USPTO.GOV

Paper No.

POSZ LAW GROUP, PLC
12040 SOUTH LAKES DRIVE
SUITE 101
RESTON VA 20191

COPY MAILED
DEC 05 2007
OFFICE OF PETITIONS

| | | |
|---|---|---|
| In re Application of | : | |
| Hiroyuki Hagano et al. | : | DECISION ON SECOND RENEWED |
| Application No. 10/622,776 | : | PETITION PURSUANT TO |
| Filed: July 21, 2003 | : | 37 C.F.R. § 1.181(A) AND |
| Attorney Docket No. 26D-010 | : | PETITION PURSUANT TO 37 |
| Title: RESIN MEMBER AND METHOD | : | C.F.R. § 1.137(B) |
| OF MANUFACTURING THE SAME | : | |

This is a decision on the second renewed petition pursuant to 37 C.F.R. § 1.181(a), filed November 13, 2007, to withdraw the holding of abandonment, as well as the concurrently filed petition pursuant to 37 C.F.R. § 1.137(b)[1].

1 A grantable petition pursuant to 37 C.F.R § 1.137(b) must be accompanied by:

(1) The reply required to the outstanding Office action or notice, unless previously filed;
(2) The petition fee as set forth in § 1.17(m);
(3) A statement that the entire delay in filing the required reply from the due date for the reply until the filing of a grantable petition pursuant to this paragraph was unintentional. The Commissioner may require additional information where there is a question whether the delay was unintentional, and;
(4) Any terminal disclaimer (and fee as set forth in § 1.20(d)) required pursuant to paragraph (d) of this section.

## BACKGROUND AND PROCEDURAL HISTORY

The above-identified application became abandoned for failure to submit the issue and publication fees in a timely manner in reply to the Notice of Allowance and Issue Fee Due, mailed January 24, 2007, which set a shortened statutory period for reply of three months. No extensions of time are permitted for transmitting issue or publication fees[2]. Accordingly, the above-identified application became abandoned on April 25, 2007. A Notice of Abandonment was mailed on May 23, 2007.

An original petition was filed on June 13, 2007, and was dismissed via the mailing of a decision on September 12, 2007 for failure to establish non-receipt of the Office communication. A renewed petition was filed on September 20, 2007, and was dismissed via the mailing of a decision on October 26, 2007.

## RELEVANT PORTION OF THE MPEP

MPEP §711.03(c)(I)(A) sets forth, *in toto*:

> In Delgar v. Schulyer, 172 USPQ 513 (D.D.C. 1971), the court decided that the Office should mail a new Notice of Allowance in view of the evidence presented in support of the contention that the applicant's representative did not receive the original Notice of Allowance. Under the reasoning of Delgar, an allegation that an Office action was never received may be considered in a petition to withdraw the holding of abandonment. If adequately supported, the Office may grant the petition to withdraw the holding of abandonment and remail the Office action. That is, the reasoning of Delgar is applicable regardless of whether an application is held abandoned for failure to timely pay the issue fee ( 35 U.S.C. 151) or for failure to prosecute ( 35 U.S.C. 133).
>
> To minimize costs and burdens to practitioners and the Office, the Office has modified the showing required to establish nonreceipt of an Office action. The showing required to establish nonreceipt of an Office communication must include a statement from the practitioner stating that the Office communication was not received by the practitioner and attesting to the fact that a search of the file jacket and docket records indicates that the Office communication was not received. A copy of the docket record where the nonreceived Office communication would have been entered had it been received and docketed must be attached to and referenced in practitioner's statement (emphasis added). For example, if a three month period for reply was set in the nonreceived Office action, a copy of the docket report showing all replies docketed for a date three months from the mail date of the nonreceived Office action must be submitted as documentary proof of nonreceipt of the Office action.
>
> The showing outlined above may not be sufficient if there are circumstances that point to a conclusion that the Office action may have been lost after receipt rather than a conclusion that the Office action was lost in the mail (e.g., if the practitioner has a history of not receiving Office actions).
>
> Evidence of nonreceipt of an Office communication or action (e.g., Notice of Abandonment or an advisory action) other than

2 See MPEP § 710.02(e).

> that action to which reply was required to avoid abandonment would not warrant withdrawal of the holding of abandonment. Abandonment takes place by operation of law for failure to reply to an Office action or timely pay the issue fee, not by operation of the mailing of a Notice of Abandonment. See Lorenz v. Finkl, 333 F.2d 885, 889-90, 142 USPQ 26, 29-30 (CCPA 1964); Krahn v. Commissioner, 15 USPQ2d 1823, 1824 (E.D. Va 1990); In re Application of Fischer, 6 USPQ2d 1573, 1574 (Comm'r Pat. 1988).

## ANALYSIS

With the original petition, Petitioner included a statement that a thorough search of the file jacket and docket records was conducted, and a docket record that was not legible.

With the renewed petition, Petitioner submitted a legible copy of the docket record that did not contain all received Office communications.

With this second renewed petition, Petitioner has submitted additional screenshots that comprise the docket record, along with an explanation of how this docket record operates.

Considering the facts and circumstances of the delay at issue, as set forth on petition, it is concluded that Petitioner has met his burden of establishing that the mailing was not received.

Accordingly, the petition under 37 C.F.R. § 1.181(a) is **GRANTED**. The holding of abandonment is **WITHDRAWN**.

Along with this second renewed petition, Petitioner has submitted the issue and publication fees. The concurrently filed petition pursuant to 37 C.F.R. § 1.137(b) is **DISMISSED AS MOOT**. The fee that is associated with the filing of the same has not been charged to Petitioner's Deposit Account.

The Office of Patent Publication will be notified of this decision so that the present application can be processed into a patent. Telephone inquiries regarding *this decision* should be directed to the undersigned at (571) 272-3225[3]. All other

---

3 Petitioner will note that all practice before the Office should be in writing, and the action of the Office will be based exclusively on the written record in the Office. See 37 C.F.R. §1.2. As such, Petitioner is reminded that no telephone discussion may be controlling or considered authority for any further action(s) of Petitioner.

inquiries concerning the status of the application should be directed to the Office of Patent Publication at 571-272-4200.

Paul Shanoski
Senior Attorney
Office of Petitions
United States Patent and Trademark Office

UNITED STATES PATENT AND TRADEMARK OFFICE

Commissioner for Patents
United States Patent and Trademark Office
P.O. Box 1450
Alexandria, VA 22313-1450
www.uspto.gov

COPY MAILED

MAR 1 4 2006

OFFICE OF PETITIONS

MORRISON & FOERSTER
425 MARKET STREET
SAN FRANCISCO, CA 94105-2482

| | | |
|---|---|---|
| In re Application of | : | |
| Roman Turovskiy et al | : | DECISION ON PETITION |
| Application No. 10/622,800 | : | TO WITHDRAW |
| Filed: July 18, 2003 | : | FROM RECORD |
| Attorney Docket No. 412692001700 | : | |

This is a decision on the Request to Withdraw as attorney or agent of record under 37 C.F.R. § 1.36(b), filed September 13, 2005.

The request is **NOT APPROVED** as moot.

A review of the file record indicates that the previously appointed power of attorney has been revoked by the assignee of the patent application. Accordingly, the request to withdraw under 37 C.F.R. § 1.136(b) is moot.

All future communications from the Office will continue to be directed to the below-listed address until otherwise notified by applicant.

This matter is being referred to Technology Center AU 3739 to await applicants' reply to the Office action mailed January 24, 2006.

Telephone inquires concerning this decision should be directed to Wan Laymon at 571-272-3220.

David Bucci
Petitions Examiner
Office of Petitions

cc: UNITED STATES SURGICAL
A DIVISION OF TYCO HEALTHCARE GROUP
195 MCDERMOTT ROAD
NORTH HAVEN, CT 06473

UNITED STATES PATENT AND TRADEMARK OFFICE

COMMISSIONER FOR PATENTS
UNITED STATES PATENT AND TRADEMARK OFFICE
P.O. BOX 1450
ALEXANDRIA, VA 22313-1450
www.uspto.gov
DIW 02-04

KQLISCH HARTWELL, P.C.
520 S.W. YAMHILL STREET
SUITE 200
PORTLAND OR 97204

**COPY MAILED**

**APR 16 2004**

**OFFICE OF PETITIONS**

| | | |
|---|---|---|
| In re Application of | : | |
| Hayes and Young | : | DECISION REFUSING STATUS |
| Application No. 10/622,808 | : | UNDER 37 CFR 1.47(a) |
| Filed: 17 July, 2003 | : | |
| Atty Docket No. NPW 346 | : | |

This is in response to the petition filed under 37 CFR 1.47(a) on 26 February, 2004.

The petition is **DISMISSED**.

Rule 47 applicant is given TWO MONTHS from the mailing date of this decision to reply, correcting the below-noted deficiencies. Any reply should be entitled "Request for Reconsideration of Petition Under 37 CFR 1.47(a)," and should only address the deficiencies noted below, except that the reply may include an oath or declaration executed by the non-signing inventor. **FAILURE TO RESPOND WILL RESULT IN ABANDONMENT OF THE APPLICATION.** Extensions of time may be obtained in accordance with 37 CFR 1.136(a).

The above-identified application was filed on 17 July, 2003, without an executed oath or declaration. Accordingly, on 26 November, 2003, a Notice to File Missing Parts of Nonprovisional Application was mailed, requiring the statutory basic filing fee, an executed oath or declaration, and a surcharge for their late filing.

In response, on 26 February, 2004, petitioners filed the present petition, the basic filing fee, a one (1) month extension of time, the late-filing surcharge, and a declaration naming Alan E. Hayes and Jerry A. Young as joint inventors, signed by joint inventor Hayes on behalf of himself and joint inventor Young.

Petitioners state that joint inventor Young cannot be reached or has refused to sign the declaration. The petition states that a copy of the application was sent to joint inventor Young, but was not returned. Petitioners have also enclosed a copy of a letter

sent to joint inventor Young's last known address, as well as a copy of the envelope in which it was sent, showing the letter was returned by the U.S. Postal Service as undeliverable.

A grantable petition under 37 CFR 1.47(a) requires:

(1) proof that the non-signing inventor cannot be reached or located, notwithstanding diligent effort, or refuses to sign the oath or declaration after having been presented with the application papers (specification, claims and drawings);

(2) an acceptable oath or declaration in compliance with 35 U.S.C. §§ 115 and 116;

(3) the petition fee;

(4) a surcharge of $130 or $65 (small entity) if the petition and/or declaration is not filed at the time of filing the application, and

(5) a statement of the last known address of the non-signing inventor.

The petition lacks item (1).

In regards to item (1), petitioners have not provided proof that joint inventor Young was ever sent or presented with a copy of the application as filed (specification, including claims, drawings, if any, and the declaration).[1] While petitioners' registered patent attorney states in the petition that both Hayes and Young were provided with copies of the application and the Declaration, it is not clear if this statement is made with first-hand knowledge. The petition further states that a letter sent to Young at his last known address asking him to sign and return the declaration was returned as undeliverable by the USPS.

Furthermore, with regards to Young's unavailability, the showing of record, a single mailing, is not sufficient to show that diligent efforts were made to contact the non-signing inventor. Petitioners should attempt to determine the non-signing inventor's current address through e-mail, Internet, or other types of searches. If repeated attempts to contact the non-signing inventor are unsuccessful, petitioners will have shown that the non-signing inventor cannot be reached.

Petitioners may show proof that a copy of the application was sent or given to the non-signing inventor for review by providing a copy of the cover letter transmitting the application papers (specification, including claims, drawings, if any, and the

[1] MPEP 409.03(d).

declaration) to the non-signing inventor or details given in an affidavit or declaration of facts by a person having first-hand knowledge of the details.

Likewise, before a *bona fide* refusal to sign the declaration can be alleged, petitioners must show that a copy of the application was sent or given to the inventor. If the inventor refuses in writing, petitioners must submit a copy of that written refusal with any renewed petition. If the refusal was made orally to a person, then that person must provide details of the refusal in an affidavit or declaration of fact.

Further correspondence with respect to this matter should be addressed as follows:

By mail: Mail Stop Petition
Commissioner for Patents
P.O. Box 1450
Alexandria, VA 22313-1450

By FAX: (703) 872-9306
Attn: Office of Petitions

By hand: U.S. Patent and Trademark Office
2011 South Clark Place
Customer Window
Crystal Plaza 2, Lobby, Room 1B03
Arlington, VA 22202

Telephone inquiries related to this decision should be directed to the undersigned at 703-308-6918.

D. Wood

Douglas I. Wood
Senior Petitions Attorney
Office of Petitions

UNITED STATES PATENT AND TRADEMARK OFFICE

Commissioner for Patents
United States Patent and Trademark Office
P.O. Box 1450
Alexandria, VA 22313-1450
www.uspto.gov
DIW d1-05

KOLISCH HARTWELL, P.C.
520 S.W. YAMHILL STREET
SUITE 200
PORTLAND OR 97204

**COPY MAILED**

JAN 25 2005

**OFFICE OF PETITIONS**

| | |
|---|---|
| In re Application of | : |
| Hayes and Young | : DECISION ACCORDING STATUS |
| Application No. 10/622,808 | : UNDER 37 CFR 1.47(a) |
| Filed: 17 July, 2003 | : |
| Atty Docket No. NPW 346 | : |

This is in response to the renewed petition filed under 37 CFR 1.47(a) on 26 May, 2004. The Office apologizes for the delay in responding to the present petition.

The petition is **GRANTED**.

Petitioners have shown that the non-signing inventor, Jerry A. Young, has refused to join in the filing of the above-identified application after having been sent a copy of the application papers. Specifically, petitioners have established, via the declaration of David J. Edlund, that a copy of the application was sent to the non-signing inventor. However, the non-signing inventor did not return an executed declaration listing him as a joint inventor along with Alan E. Hayes. Furthermore, an additional copy of the application sent to the non-signing joint inventor was returned as undeliverable, and petitioners have shown that despite diligent efforts, the non-signing inventor could not be reached.

The above-identified application and papers have been reviewed and found in compliance with 37 CFR 1.47(a). This application is hereby accorded Rule 1.47(a) status.

As provided in Rule 1.47(c), this Office will forward notice of this application's filing to the non-signing inventor at the address given in the Declaration. Notice of the filing of this application will also be published in the Official Gazette.

After this decision is mailed, the application will be referred to Technology Center 3746 for examination in due course.

Telephone inquiries related to this decision should be directed to the undersigned at 571-272-3231.

Douglas I. Wood
Senior Petitions Attorney
Office of Petitions

UNITED STATES PATENT AND TRADEMARK OFFICE

Commissioner for Patents
United States Patent and Trademark Office
P.O. Box 1450
Alexandria, VA 22313-1450
www.uspto.gov
DIW 01-05

Jerry Young
2500 NW Regency #85
Bend, OR 97701

**COPY MAILED**

JAN 25 2005

**OFFICE OF PETITIONS**

In re Application of
Hayes et al.
Application No. 10/622,808
Filed: 17 July, 2003
For: POSITIVE DISPLACEMENT LIQUID PUMP

Dear Mr. Young:

You are named as a joint inventor in the above identified United States patent application, filed under the provisions of 35 U.S.C. 116 (United States Code), and 37 CFR 1.47(a), Rules of Practice in Patent Cases. Should a patent be granted on the application you will be designated therein as a joint inventor.

As a named inventor you are entitled to inspect any paper in the file wrapper of the application, order copies of all or any part thereof (at a prepaid cost per 37 CFR 1.19) or make your position of record in the application. Alternatively, you may arrange to do any of the preceding through a registered patent attorney or agent presenting written authorization from you. If you care to join the application, counsel of record (see below) would presumably assist you. Joining in the application would entail the filing of an appropriate oath or declaration by you pursuant to 37 CFR 1.63.

Telephone inquiries regarding this communication should be directed to the undersigned at 571/272-3231. Requests for information regarding your application should be directed to the File Information Unit at 703/308-2733. Information regarding how to pay for and order a copy of the application, or a specific paper in the application, should be directed to Certification Division at 703/308-9726 or 1-800-972-6382 (outside the Washington D.C. area).

DWood

Douglas I. Wood
Senior Petitions Attorney
Office of Petitions

KOLISCH HARTWELL, P.C.
520 S.W. YAMHILL STREET
SUITE 200
PORTLAND OR 97204

UNITED STATES PATENT AND TRADEMARK OFFICE

Commissioner for Patents
United States Patent and Trademark Office
P.O. Box 1450
Alexandria, VA 22313-1450
www.uspto.gov

Millen, White, Zelano & Branigan, P.C.
2200 Clarendon Blvd.
Suite 1400
Arlington, VA 22201

**COPY MAILED**

SEP 21 2004

**OFFICE OF PETITIONS**

| | | |
|---|---|---|
| In re Application of | : | |
| Schumacher et al. | : | |
| Application No. 10/622,833 | : | DECISION ON PETITION |
| Filed: July 21, 2003 | : | |
| Attorney Docket No. MEMORY-28 | : | |

This is a decision on the petition filed August 20, 2004, requesting that the above-identified application be accorded a filing date of July 21, 2003, with pages 51-74 of the specification as part of the original disclosure.

On July 21, 2003, applicants filed the above-identified application. On June 21, 2004, the Office mailed a Notice to File Missing Parts of Nonprovisional Application, stating, *inter alia*, that the application had been accorded a filing date of July 21, 2003, and advising applicants that pages 51-74 of the specification appeared to have been omitted.

In response, on August 20, 2004, applicants filed the present petition and a copy of applicants' postcard receipt acknowledging receipt of "NEW ORIGINAL APPLICATION INCLUDING 123 PGS. OF SPEC, 72 PGS. CLAIMS, 1 PGS. ABSTRACT" on July 21, 2003. Unfortunately, applicants failed to submit copies of pages 51-74 of the specification with the present petition.

Accordingly, the petition is **dismissed** without prejudice for reconsideration pending the submission of copies of pages 51-74 of the specification.

Any request for reconsideration must be submitted within TWO MONTHS of the date of this decision and include copies of pages 51-74 of the specification.

Further correspondence with respect to this matter should be addressed as follows and to the attention of Senior Petitions Attorney Christina Tartera Donnell:

By mail: Mail Stop Petition
Commissioner for Patents
P.O. Box 1450
Alexandria, VA 22313-1450

By FAX: (703) 872-9306
Attn: Office of Petitions

By hand: U.S. Patent and Trademark Office
220 20th Street S.
Customer Window, Mail Stop Petition
Crystal Plaza 2, Lobby, Room 1B03
Arlington, VA 22202

Any inquiries related to this decision should be directed to the undersigned at (703) 306-5589.

Christina Tartera Donnell

Christina Tartera Donnell
Senior Petitions Attorney
Office of Petitions

UNITED STATES PATENT AND TRADEMARK OFFICE

Commissioner for Patents
United States Patent and Trademark Office
P.O. Box 1450
Alexandria, VA 22313-1450
www.uspto.gov

Millen, White Zelano & Branigan, PC
2200 Clarendon Blvd.
Suite 1400
Arlington, VA 22201

COPY MAILED
NOV 22 2004
OFFICE OF PETITIONS

| | | |
|---|---|---|
| In re Application of | : | |
| Schumacher et al. | : | |
| Application No. 10/622,833 | : | DECISION GRANTING PETITION |
| Filed: July 21, 2003 | : | |
| Attorney Docket No. MEMORY-28 | : | |

This is a decision on the renewed petition filed October 4, 2004, requesting that the above-identified application be accorded a filing date of July 21, 2003, with pages 51-74 of the specification as part of the original disclosure.

On July 21, 2003, applicants filed the above-identified application. On June 21, 2004, the Office mailed a Notice to File Missing Parts of Nonprovisional Application, stating, *inter alia*, that the application had been accorded a filing date of July 21, 2003, and advising applicants that pages 51-74 of the specification appeared to have been omitted.

In response, on August 20, 2004, applicants filed a petition and a copy of their postcard receipt acknowledging receipt of "NEW ORIGINAL APPLICATION INCLUDING 123 PGS. OF SPEC, 72 PGS. CLAIMS, 1 PGS. ABSTRACT" on July 21, 2003. The evidence presented was convincing that the application papers deposited on July 21, 2003, included pages 51-74 of the specification, which were subsequently misplaced in the United States Patent and Trademark Office. Unfortunately, applicants' petition was dismissed by the decision of September 21, 2004, because applicants failed to submit copies of pages 51-74 of the specification.

On October 4, 2004, applicants filed the present renewed petition and copies of pages 51-74 of the specification. Accordingly, the petition is granted.

The Office of Initial Patent Examination is directed to accord the application a **filing date of July 21, 2003**, using the copies of pages 51-74 of the specification submitted with the petition filed on October 4, 2004.

Telephone inquiries concerning this matter may be directed to the undersigned at (703) 306-5589.

Christina Tartera Donnell

Christina Tartera Donnell
Senior Petitions Attorney
Office of Petitions

UNITED STATES PATENT AND TRADEMARK OFFICE

Commissioner for Patents
United States Patent and Trademark Office
P.O. Box 1450
Alexandria, VA 22313-1450
www.uspto.gov

JUN 25 2007

MILLEN, WHITE, ZELANO & BRANIGAN, PC
2300 CLARENDON BLVD
SUITE 1400
ARLINGTON, VA 22201

| | |
|---|---|
| In re Application of | : |
| Richard A. Schumaker et al | : |
| Serial No.: 10/622,833 | : PETITION DECISION |
| Filed: July 21, 2003 | : |
| Attorney Docket No.: MEMORY-28 | : |

This is in response to the petition under 37 CFR 1.144, filed April 2, 2007, requesting withdrawal of an improper restriction requirement.

BACKGROUND

A review of the file history shows that this application was filed under 35 U.S.C. 111 on February 11, 2003, and contained claims 1-113. In a first Office action, mailed September 1, 2005, the examiner required restriction between the inventions claimed, as follows:

Group I – Claims 1-7, 21-22, 36-37, 51-52, 66-67, 81-82, 96-97 and 111-113 drawn to products of Formula I;

Group II – Claims 8-20, 23-35, 38-50, 53-65, 68-80, 83-95 and 98-110 drawn to methods of use of the products of Formula I.

An election of species of the condition to be treated was required for Group II as well as an election of a single compound (species) for either Group.

The examiner reasoned that the inventions were distinct based on the wide variety of definitions for R1-R4 which give rise to many permutations and combinations and a reference anticipating one species would not anticipate or render obvious another. The examiner advised of rejoinder of non-elected method claims with allowable elected product claims.

Applicants replied on September 22, 2005, electing Group I and a species with traverse. Applicants commented that it was presumed that the examiner would follow the guidelines of M.P.E.P. 803.02 with regard to the election of species and not further restrict within the claims.

The examiner mailed a new Office action to applicants on December 20, 2005, maintaining the restriction requirement and maintaining that there were a large number of independent and distinct inventions encompassed within the product claims. The examiner then defined the limit of each variable $R^1$-$R^6$ and L in claim 1 and indicated that products outside the scope of the limits were considered non-elected and withdrawn. The examiner then objected to the claims for containing non-elected subject matter and rejected the claim under 35 U.S.C. 112, second paragraph, as indefinite, under 35 U.S.C. 102(e) as anticipated and under 35 U.S.C. 103(a) as unpatentable and for obvious double patenting.

Applicants filed a reply on February 15, 2006, amending claims 8, 11 and 16-20 to be independent, replacing canceled claim 1, and again traversing the restriction requirement and the examiner's limitation of the claims. All other rejections were responded to appropriately..

The examiner mailed a series of non-compliant amendment letters to applicants on April 27, 2006, July 26, 2006, and September 8, 2006, requiring revision of the amendments to the claims to be in compliance with 37 CFR 1.121. Applicants replied timely to each request. The examiner mailed a Final Office action to applicants on January 16, 2007, withdrawing all rejections of record. The examiner continued to maintain the restriction requirement and limitation of the claims as previously set forth and objected to the allowed product claims as containing non-elected subject matter needing to be canceled.

Applicants filed a reply to the Office action on April 2, 2007, and this petition requesting withdrawal of an improper restriction requirement.

DISCUSSION

The examiner's last Office action mailed January 16, 2007, indicates all elected product claims allowable, but objected to as containing non-elected subject matter. The examiner appears not to have considered the non-elected method claims for rejoinder.

Applicants argue that the examiner's limitation of the variables, as set forth in the Office action mailed December 20, 2005, is improper and cite In re Weber, In re Hozumi, In re Harnish and In re Haas for support. These same cases were cited in the traversal of the examiner's limitation of the claims. Applicants argue that where there is a common core shared by all compounds and a common utility associated with that core restriction within a claim is improper. The examiner dismissed each of these cases as not applying to the instant application or examiner action since no rejection under 35 U.S.C. 121 had been made and the cases were, therefore, not relevant. As argued by applicants, the examiner has not applied this well-defined test to the instant claims.

As can be seen from the formula in claim1, the basic structure is a benzene ring with two OR substituents attached ortho to each other and a disubstituted amino substituent para to one of the OR groups. Each R group is well-defined and encompasses many possible substitutions. However, the common core remains the same. This satisfied the requirement of M.P.E.P. 803.02 and the examiner must follow the guidelines therein having made an election of species requirement. No provision is made therein for examiner limitation of applicants' claims. The examiner's objection to the product claims containing non-elected subject matter is in error.

DECISION

The petition is **GRANTED.** The election of species requirement by the examiner is acknowledged as is the determination that the species elected is allowable. Based upon this the examiner must extend the examination to additional species to determine the allowability of the genus.

**The application will be forwarded to the examiner for consideration of applicants' reply to the Final Office action filed April 2, 2007, commensurate with the above decision. In addition, the Finality of the previous Office action is considered premature in view of the claim limitations imposed by the examiner in error and failure to consider rejoinder of method claims upon allowance of product claims and is hereby withdrawn.**

Should there be any questions about this decision please contact William R. Dixon, Jr., by letter addressed to Director, TC 1600, at the address listed above, or by telephone at 571-272-0519 or by facsimile sent to the general Office facsimile number.

John LeGuyader.
Director, Technology Center 1600

UNITED STATES PATENT AND TRADEMARK OFFICE

COMMISSIONER FOR PATENTS
UNITED STATES PATENT AND TRADEMARK OFFICE
P.O. BOX 1450
ALEXANDRIA, VA 22313-1450
www.uspto.gov

**SHEMWELL MAHAMEDI LLP**
**4880 STEVENS CREEK BLVD.**
**SUITE 201**
**SAN JOSE, CA 95129**

COPY MAILED

JUL 11 2007

OFFICE OF PETITIONS

| | | |
|---|---|---|
| In re Patent No. 6,901,000 | : | ON PETITION |
| Issue Date: May 31, 2005 | : | |
| Application No. 10/622,862 | : | |
| Filed: July 18, 2003 | : | |
| Attorney Docket No. NLMI.P136 | : | |

This is a decision on the requests, filed March 6, 2006 and June 9, 2006, which are being treated as a request under 37 CFR 3.81(b)[1] to include the omitted name of the assignee on the front page of the above-identified patent by way of a Certificate of Correction.

The petition is **GRANTED**.

The patent file is being forwarded to the Certificates of Correction Branch for issuance of the requested Certificate of Correction.

Telephone inquiries concerning this decision may be directed to the undersigned at (571) 272-3218. Inquiries regarding the issuance of a certificate of correction should be directed to the Certificate of Correction Branch at (571) 272-4200.

Frances Hicks
Petitions Examiner
Office of Petitions

[1] *See* MPEP 1309, subsection II; and Official Gazette of June 22, 2004.

UNITED STATES PATENT AND TRADEMARK OFFICE

UNITED STATES DEPARTMENT OF COMMERCE
United States Patent and Trademark Office
Address: COMMISSIONER FOR PATENTS
P.O. Box 1450
Alexandria, Virginia 22313-1450
www.uspto.gov

| APPL NO. | FILING OR 371 (c) DATE | ART UNIT | FIL FEE REC'D | ATTY.DOCKET NO | DRAWINGS | TOT CLMS | IND CLMS |
|---|---|---|---|---|---|---|---|
| 10/622,891 | 07/17/2003 | 1645 | 1005 | GAM 6410.1 | 1 | 62 | 9 |

**CONFIRMATION NO. 2751**

**CORRECTED FILING RECEIPT**

*OC000000012462074*

000321
SENNIGER POWERS LEAVITT AND ROEDEL
ONE METROPOLITAN SQUARE
16TH FLOOR
ST LOUIS, MO 63102

Date Mailed: 04/30/2004

Receipt is acknowledged of this regular Patent Application. It will be considered in its order and you will be notified as to the results of the examination. Be sure to provide the U.S. APPLICATION NUMBER, FILING DATE, NAME OF APPLICANT, and TITLE OF INVENTION when inquiring about this application. Fees transmitted by check or draft are subject to collection. Please verify the accuracy of the data presented on this receipt. **If an error is noted on this Filing Receipt, please write to the Office of Initial Patent Examination's Filing Receipt Corrections, facsimile number 703-746-9195. Please provide a copy of this Filing Receipt with the changes noted thereon. If you received a "Notice to File Missing Parts" for this application, please submit any corrections to this Filing Receipt with your reply to the Notice. When the USPTO processes the reply to the Notice, the USPTO will generate another Filing Receipt incorporating the requested corrections (if appropriate).**

**Applicant(s)**

Graham Alan March, Surrey, UNITED KINGDOM;

**Assignment For Published Patent Application**

Special Products Limited;

**Domestic Priority data as claimed by applicant**

This appln claims benefit of 60/397,828 07/23/2002

**Foreign Applications**

**If Required, Foreign Filing License Granted:** 04/12/2004

**Projected Publication Date:** 08/05/2004

**Non-Publication Request:** No

**Early Publication Request:** No

**** SMALL ENTITY ****

**Title**

Pharmaceutical composition and method for treatment of a urea cycle deficiency or sickle-cell

anaemia

**Preliminary Class**

514

---

## LICENSE FOR FOREIGN FILING UNDER
## Title 35, United States Code, Section 184
## Title 37, Code of Federal Regulations, 5.11 & 5.15

**GRANTED**

The applicant has been granted a license under 35 U.S.C. 184, if the phrase "IF REQUIRED, FOREIGN FILING LICENSE GRANTED" followed by a date appears on this form. Such licenses are issued in all applications where the conditions for issuance of a license have been met, regardless of whether or not a license may be required as set forth in 37 CFR 5.15. The scope and limitations of this license are set forth in 37 CFR 5.15(a) unless an earlier license has been issued under 37 CFR 5.15(b). The license is subject to revocation upon written notification. The date indicated is the effective date of the license, unless an earlier license of similar scope has been granted under 37 CFR 5.13 or 5.14.

This license is to be retained by the licensee and may be used at any time on or after the effective date thereof unless it is revoked. This license is automatically transferred to any related applications(s) filed under 37 CFR 1.53(d). This license is not retroactive.

The grant of a license does not in any way lessen the responsibility of a licensee for the security of the subject matter as imposed by any Government contract or the provisions of existing laws relating to espionage and the national security or the export of technical data. Licensees should apprise themselves of current regulations especially with respect to certain countries, of other agencies, particularly the Office of Defense Trade Controls, Department of State (with respect to Arms, Munitions and Implements of War (22 CFR 121-128)); the Office of Export Administration, Department of Commerce (15 CFR 370.10 (j)); the Office of Foreign Assets Control, Department of Treasury (31 CFR Parts 500+) and the Department of Energy.

**NOT GRANTED**

No license under 35 U.S.C. 184 has been granted at this time, if the phrase "IF REQUIRED, FOREIGN FILING LICENSE GRANTED" DOES NOT appear on this form. Applicant may still petition for a license under 37 CFR 5.12, if a license is desired before the expiration of 6 months from the filing date of the application. If 6 months has lapsed from the filing date of this application and the licensee has not received any indication of a secrecy order under 35 U.S.C. 181, the licensee may foreign file the application pursuant to 37 CFR 5.15(b).

UNITED STATES PATENT AND TRADEMARK OFFICE

Commissioner for Patents
United States Patent and Trademark Office
P.O. Box 1450
Alexandria, VA 22313-1450
www.uspto.gov

NOV 18 2004

PERKINS COIE LLP
PATENT-SEA
P.O. BOX 1247
SEATTLE WA 98111-1247

| | | |
|---|---|---|
| In re Application of | : | |
| Evan B. Gliner et al | : | |
| Application No: 10/622,898 | : | NOTICE OF |
| Filed: July 17, 2003 | : | WITHDRAWAL FROM ISSUE |
| Title: Methods For Treating Essential | : | UNDER 37 C.F.R 1.313 |
| Tremor | : | |

The purpose of this communication is to inform you that the above-identified application is being withdrawn from issue pursuant to 37 C.F.R. 1.313.

The application is being withdrawn to permit reopening of prosecution due to unpatentability of one or more claims. See 37CFR 1.313(b)(3).

PTO records reveal that the issue fee has been paid. If the fee has been submitted, the applicant may request a refund or may request that the fee be credited to a deposit account. However, applicant may wait until the application is either again found allowable or held abandoned. If the application is allowed, upon receipt of a new Notice of Allowance and Issue Fee Due, applicant may request that the previously submitted issue fee be applied toward payment of the issue fee in the amount identified on the new Notice of Allowance and Issue Fee Due. If the application is abandoned, applicant may request either a refund or a credit to a deposit account.

The application is being forwarded to the Examiner for action.

John E. Kittle
Director
Technology Center 3700/2900

UNITED STATES PATENT AND TRADEMARK OFFICE

Commissioner for Patents
United States Patent and Trademark Office
P.O. Box 1450
Alexandria, VA 22313-1450
www.uspto.gov
DIW 11-04

STOLL, KEENON & PARK, LLP
300 W. VINE STREET, SUITE 2100
LEXINGTON KY 40507

COPY MAILED

NOV 30 2004

OFFICE OF PETITIONS

| | | |
|---|---|---|
| In re Application of | : | |
| James T. Hafendorfer | : | |
| Application No. 10/622,899 | : | DECISION DISMISSING |
| Filed: 19 July, 2003 | : | PETITION |
| Attorney Docket No. 101339.112335 | : | |

This is a decision on the petition under 37 CFR 1.10(d) filed on 14 November, 2003, requesting that the above-identified application be accorded a filing date of 18 July, 2003, instead of the presently accorded filing date of 19 July, 2003.

The Office apologizes for the delay in responding to the present petition and regrets any inconvenience to petitioner.

Petitioners request the earlier filing date on the basis that the application was purportedly deposited in Express Mail service on 18 July, 2003, pursuant to the requirements of 37 CFR 1.10. In support, petitioners have provided a copy of an Express Mail log book purporting to show that the application was deposited on 18 July, 2003. Petitioners additionally assert that since the "time in" is marked 2:00 am on the Express Mail label showing a "date-in" of 19 July, 2003, the application must have been deposited with the USPS on 18 July, 2003.

Paragraph (a) of 37 CFR 1.10 states that:

> Any correspondence received by the Patent and Trademark Office (Office) that was delivered by the "Express Mail Post Office to Addressee" service of the United States Postal Service (USPS) will be considered filed in the Office on the date of deposit with the USPS. The date of deposit with the USPS is shown by the "date-in" on the "Express Mail" mailing label or other official USPS notation. If the USPS deposit

> date cannot be determined, the correspondence will be accorded the Office receipt date as the filing date.[1] (emphasis added)

At the outset, petitioners are reminded that correspondence should be deposited directly with an employee of the USPS to ensure that the person depositing the correspondence receives a legible copy of the "Express Mail" mailing label with the "date-in" clearly marked. Persons dealing indirectly with the employees of the USPS (such as by deposit in an "Express Mail" drop box) do so at the risk of not receiving a copy of the "Express Mail" mailing label with the desired "date-in" clearly marked.[2] In this case, it is unclear from the facts presented whether the individual who deposited the application in Express Mail did so at a USPS customer service window or via a drop box. In any event, petitioners could have avoided the predicament that has now occurred by obtaining a copy of the Express Mail mailing label with the "date-in" completed before leaving the USPS customer service window. The Express Mail mailing label provides a means to verify the date that the application papers were deposited in Express Mail Post Office to Addressee Service.

Further, in this regard, petitioner's argument that the above-identified Express Mail shipment must have been deposited with the USPS on 18 July, 2003 because the Express Mail label shows it was received at 2:00 am on 19 July, 2003, has been considered but is not persuasive. In the absence of evidence that the application was actually accepted by the USPS on 18 July, 2003, it cannot be assumed that the application was deposited with the USPS on 18 July, 2003, or any date other than the "date-in" marked on the official Express Mail customer label, which is 19 July, 2003.

Paragraph (d) of 37 CFR 1.10 states that:

> Any person filing correspondence under this section that was received by the Office and delivered by the "Express Mail Post Office to Addressee" service of the USPS, who can show that the "date-in" on the "Express Mail" mailing label or other official notation entered by the USPS was incorrectly entered or omitted by the USPS, may petition the Commissioner to accord the correspondence a filing date as

---

[1] See 37 CFR 1.6(a).

[2] 37 CFR 1.10(b).

> of the date the correspondence is shown to have been deposited with the USPS, provided that:
> (1) The petition is filed promptly after the person becomes aware that the Office has accorded, or will accord, a filing date based upon an incorrect entry by the USPS;
> (2) The number of the "Express Mail" mailing label was placed on the paper(s) or fee(s) that constitute the correspondence prior to the original mailing by "Express Mail"; and
> (3) The petition includes a showing which establishes, to the satisfaction of the Commissioner, that the requested filing date was the date the correspondence was deposited in "Express Mail Post Office to Addressee" service prior to the last scheduled pickup for that day. Any showing pursuant to this paragraph must be corroborated by evidence from the USPS or that came into being after deposit and within one business day of the deposit of the correspondence in the "Express Mail Post Office to Addressee" service of the USPS. Any statement submitted in support of such a showing pursuant to this paragraph must be a verified statement if made by a person other than an employee of the USPS or a practitioner as defined in § 10.1(r) of this chapter.

The petition lacks the showing required by item (3) above. The present petition is not supported by corroborating evidence showing that the correspondence was deposited as Express Mail prior to the last scheduled pickup on the requested filing date. Petitioner has not explained whether the log book entry was made after and within one day of the deposit of the application with the USPS. Petitioner would need to provide an affidavit or a declaration of facts by the individual who made the log book entry and deposited the application with the USPS stating the procedure for depositing Express Mail with the USPS and recording Express Mail mailings in the above-mentioned log.

Alternatively, petitioner should consider providing evidence from the USPS (e.g. Express Mail Corporate account Mailing Statement or an official letter) showing the date the application was accepted by the USPS.

In summary, the showing of record indicates that petitioners intended to deposit the application in Express Mail on 18 July, 2003, however there is no showing that the application was actually deposited in Express Mail Post Office to Addressee service on that date. Petitioners should also note that there is no provision in the rules for a certificate of mailing by

"Express Mail".[3] In accordance with 37 CFR 1.10(d)(3), the Express Mail certificate of mailing may not serve as evidence of timely mailing because it was created prior to the deposit of the application in Express Mail.

Accordingly, the petition is dismissed.

The application is being referred to Technology Center 3700 for examination in due course.

Telephone inquiries may be directed to the undersigned at 571-272-3231.

D Wood

Douglas Wood
Senior Petitions Attorney
Office of Petitions

[3]The requirement of 37 CFR 1.10(d) for a certificate of mailing by "Express Mail" has been waived by the Commissioner. See 1174 O.G. Pat. Of. 92 (May 16, 1995).

UNITED STATES
PATENT AND
TRADEMARK OFFICE

UNDER SECRETARY OF COMMERCE FOR INTELLECTUAL PROPERTY AND
DIRECTOR OF THE UNITED STATES PATENT AND TRADEMARK OFFICE
P.O. Box 1450
Alexandria, VA. 22313-1450
WWW.USPTO.GOV

Paper No.

Payam Moradian
KENYON & KENYON LLP
One Broadway
New York, N.Y. 10004

Date: January 30, 2006
Application No. 10/622,905
Filed: July 18, 2003
Subject: **POLYMORPHIC FORMS OF NATEGLINIDE**

**ON PETITION**
**37 CFR 1.48**

Receipt is acknowledged of the petition filed January 30, 2006 under 37 CFR 1.48(a) for correction of inventorship. The petition has been **GRANTED**.

In view of the papers filed, it has been found that this non-provisional application, as filed, through error and without deceptive intent, improperly set forth the Inventorship, and accordingly, this application has been changed by the **addition of SHLOMIT WIZEL**. The application will be forwarded to the Office of Initial Patent Examination (OIPE) for issuance of a corrected filing receipt, and correction of the file jacket and PTO PALM data to reflect the inventorship as corrected.

**THURMAN K. PAGE, M.A., J.D.**
**SUPERVISORY PATENT EXAMINER**

**THURMAN K. PAGE**
**United States Patent and Trademark Office**
**Technology Center 1600**
**SPE, ART UNIT 1621**
**Remsen 5D11**
**571-272-0602**

UNITED STATES PATENT AND TRADEMARK OFFICE

Commissioner for Patents
United States Patent and Trademark Office
P.O. BOX 1450
ALEXANDRIA, VA 22313-1450
www.uspto.gov

James G. O'Neill
Klein, O'Neill & Singh, LLP
Suite 510
2 Park Plaza
Irvine CA 92614

COPY MAILED

AUG 0 4 2004

OFFICE OF PETITIONS

| | | |
|---|---|---|
| In re Application of | : | |
| Kevin M. Haakenson | : | |
| Application No. 10/622,930 | : | DECISION GRANTING PETITION |
| Filed: July 18, 2003 | : | |
| Attorney Docket No. 782-03-PA-J | : | |

This is a decision on the petition filed May 17, 2004, requesting that the above-identified application be accorded a filing date of July 18, 2003.

On July 18, 2003, applicant deposited the above-identified application. On April 19, 2004, the Office of Initial Patent Examination mailed a "Notice of Incomplete Nonprovisional Application," stating that the application had not been accorded a filing date as the application was deposited without any drawings and that the filing date would be the date of receipt of the omitted item. Additionally, the Notice indicated applicant must submit an a new oath or declaration identifying the inventor's country of citizenship in compliance with 37 CFR 1.63.

In response, on May 17, 2004, applicant filed a declaration, the present petition, the petition fee, and a copy of applicant's postcard receipt acknowledging receipt of 1 page of drawing sheets. Additionally, applicant submitted a copy of 1 sheet of drawings, consisting of Figures 1-4.

Upon review of the record, 1 sheet of drawings (Figures 1-4), deposited on July 18, 2003, has not been located among the application papers. However, the evidence is convincing that the application papers deposited on July 18, 2003, included 1 sheet of drawings (Figures 1-4), which was subsequently misplaced in the United States Patent and Trademark Office. Therefore, the

application, including the 1 sheet of drawings (Figures 1-4), was complete on filing and will be granted a filing date of July 18, 2003.

Accordingly, the petition is granted.

The requirement to submit drawings set forth in the Notice of April 19, 2004, was sent in error and is hereby vacated. Accordingly, the $130.00 petition fee is unnecessary and will be credited to Deposit Account No. 11-1159.

The Office of Initial Patent Examination is directed to accord the above-identified application a filing date of July 18, 2003, using the 1 sheet of drawings (Figures 1-4) submitted on petition, and to mail a corrected filing receipt. The Office records should indicate that 1 sheet of drawings was submitted on filing.

Any inquiries related to this decision should be directed to the undersigned at (703) 306-5589.

Christina Tartera Donnell

Christina Tartera Donnell
Senior Petitions Attorney
Office of Petitions

UNITED STATES PATENT AND TRADEMARK OFFICE

COMMISSIONER FOR PATENTS
UNITED STATES PATENT AND TRADEMARK OFFICE
P.O. BOX 1450
ALEXANDRIA, VA 22313-1450
www.uspto.gov

COPY MAILED
NOV 07 2006
OFFICE OF PETITIONS

JEFFREY N. COLLINS
COLLINS & SKILLERN, P.L.L.C.
5327 SUMMERHILL ROAD
TEXARKANA, TX 75503

In re Application of
David R. Clay
Application No. 10/622,931
Filed: July 18, 2003
Attorney Docket No. DRC002

ON PETITION

This is a decision on the petition, filed March 20, 2006, to revive the above-identified application under the provisions of 37 CFR 1.137(b).

The petition is **GRANTED**.

The above-identified application became abandoned for failure to respond in a timely manner to the Notice of Allowability mailed March 23, 2005. A Notice of Abandonment was mailed on November 29, 2005. In response, on March 20, 2006, the present petition was filed.

The petition is found to comply with the requirements of 37 CFR 1.137(b).

The application is being referred to the Office of Publications to oversee the review of the drawing filed March 20, 2006.

Telephone inquires related to this decision may be directed to the undersigned at (571) 272-3204. Status inquires related to processing at Publishing Division should be directed to (571) 272-4200.

Sherry D. Brinkley
Petitions Examiner
Office of Petitions

UNITED STATES PATENT AND TRADEMARK OFFICE

Commissioner for Patents
United States Patent and Trademark Office
P.O. Box 1450
Alexandria, VA 22313-1450
www.uspto.g

DARBY & DARBY P.C.
P.O. BOX 770
Church Street Station
New York NY 10008-0770

COPY MAILED

DEC 0 5 2008

OFFICE OF PETITIONS

In re Application of :
Helmut Kreller :
Application No. 10/622,935 : DECISION ON PETITION
Filed: July 18, 2003 :
Attorney Docket No. 01954/000M900-US0 :

This is a decision on the petition under 37 CFR 1.183, filed October 15, 2008, which is being treated as a request under 37 CFR 3.81(b)[1] to correct the assignee's name on the Fee(s) Transmittal form PTOL-85(b) by way of a certificate of correction in the patent that has issued from the above-identified application.

The request is **GRANTED**.

Petitioner states that the correct assignee's name is Wilhelm Layher Verwaltungs-GmbH, Guglingen-Eibensack (DE) and that the incorrect assignee's name was included on the Fee(s) Transmittal form PTOL-85(b) at the time of payment of the issue fee. Accordingly, petitioner requests that a certificate of correction be issued to reflect the correct assignee on the front page of the Letters Patent in the patent that has issued from the application.

37 CFR 3.81(b), effective June 25, 2004, reads:

> *After payment of the issue fee:* Any request for issuance of an application in the name of the assignee submitted after the date of payment of the issue fee, and any request for a patent to be corrected to state the name of the assignee, must state that the

[1] *See* MPEP 1309, subsection II; and Official Gazette of June 22, 2004.

> assignment was submitted for recordation as set forth in § 3.11 before issuance of the patent, and must include a request for a certificate of correction under § 1.323 of this chapter (accompanied by the fee set forth in § 1.20(a) and the processing fee set forth in § 1.17(i) of this chapter.

The petition was accompanied by a certificate of correction (and fee) as required by 3.81(b). Further, Office assignment records reflect that Wilhelm Layher Verwaltungs-GmbH, Guglingen-Eibensback (DE) is the assignee of record. Accordingly, as the request complies with the provisions of 37 CFR 3.81(b), it would be appropriate for a certificate of correction to be processed.

Inquiries concerning this decision should be directed to JoAnne Burke at (571) 272-4584. Any questions concerning the issuance of a certificate of correction should be directed to the Certificates of Correction Branch at (571) 272-4200.

This matter is being referred to the Certificates of Correction Branch for processing of a certificate of correction in accordance with this decision.

Ramesh Krishnamurthy

Ramesh Krishnamurthy
Petitions Examiner
Office of Petitions

UNITED STATES PATENT AND TRADEMARK OFFICE

Commissioner for Patents
United States Patent and Trademark Office
P.O. Box 1450
Alexandria, VA 22313-1450
www.uspto.gov

WOODS FULLER SHULTZ & SMITH
ATTN: JEFFREY A. PROEHL
P.O BOX 5027
SIOUX FALLS SD 57117

**COPY MAILED**

MAR 2 9 2007

**OFFICE OF PETITIONS**

| | |
|---|---|
| In re Application of | : |
| Steve Milcetich | : |
| Application No. 10/622,946 | : DECISION GRANTING PETITION |
| Filed: July 18, 2003 | : UNDER 37 CFR 1.137(b) |
| Attorney Docket No. 23-0172 | : |

This is a decision on the petition under 37 CFR 1.137(b), filed November 22, 2006, to revive the above-identified application.

The petition is **GRANTED**.

The petition satisfies the conditions for revival pursuant to the provisions of 37 CFR 1.137(b) in that (1) the reply in the form of an RCE and an amendment; (2) the petition fee; and (3) the required statement of unintentional delay have been received. Accordingly, the reply to the Final Rejection of August 10, 2005, is accepted as having been unintentionally delayed.

Telephone inquiries concerning this decision should be directed to the undersigned at (571) 272-3208.

This matter is being referred to Technology Center AU 3754.

Karen Creasy

Karen Creasy
Petitions Examiner
Office of Petitions

UNITED STATES PATENT AND TRADEMARK OFFICE

OFFICE

COPY MAILED

FEB 0 3 2006

Director's Office
Office of Patent Publication

ROHM AND HAAS COMPANY
PATENT DEPARTMENT
100 INDEPENDENCE MALL WEST
PHILADELPHIA, PA 19106-2399

| | | |
|---|---|---|
| In re Application of | : | |
| BOGAN, LEONARD EDWARD JR., et al. | : | |
| Application No. 10/622,967 | : | **DECISION ON PETITION** |
| Filed: July 18, 2003 | : | |
| Attorney Docket No. A01231A | : | |

This is a decision on the Petition To Withdraw Holding Of Abandonment Under 37 CFR 1.181, received in the United States Patent and Trademark Office (USPTO) on August 11, 2005.

The petition is **GRANTED.**

The above-identified application was held abandoned for applicant's failure to timely pay the issue fee and publication as required in the Notice of Allowance and Fee(s) Due, mailed January 25, 2005, which set a three (3) month statutory period for reply. The Notice of Abandonment was mailed on July 7, 2005.

Petitioner has submitted a copy of the Issue Fee Transmittal Form PTOL-85B (Transmittal), and a copy of a returned postcard, which acknowledges receipt of the Transmittal by the USPTO, on February 2, 2005, as evidenced by the Office Date stamp thereon.

MPEP 503 states the following:

> A postcard receipt which itemizes and properly identifies the items which are being filed serves as *prima facie* evidence of receipt in the USPTO of all items listed thereon on the date stamped thereon by the USPTO.

In view of the above, the holding of abandonment for failure to timely pay the issue fee is hereby withdrawn.

As authorized, the issue fee in the amount of $1,400 and $300 for the publication fee were charged to Deposit Account No. 18-1850.

The application will be forwarded to the Publishing Division to be processed into a patent.

Thomas E. Hawkins
Paralegal Specialist
Office of the Director
Office of Patent Publications

UNITED STATES PATENT AND TRADEMARK OFFICE

COMMISSIONER FOR PATENTS
UNITED STATES PATENT AND TRADEMARK OFFICE
P.O. BOX 1450
ALEXANDRIA, VA 22313-1450
www.uspto.gov

**MAIL**

JUN 2 9 2005

DIRECTOR OFFICE
TECHNOLOGY CENTER 2100

MERCHANT & GOULD PC
P.O. BOX 2903
MINNEAPOLIS MN 55402-0903

In re Application of: COLVIN, et al.
Application No. 10/622,976
Filed: July 18, 2003
For: SYSTEM AND METHOD FOR AUTOMATED RESERVOIR TARGETING

DECISION ON PETITION UNDER 37 CFR § 1.181 TO WITHDRAW HOLDING OF ABANDONMENT

This is a decision on the petition under 37 CFR § 1.181 to withdraw the holding of abandonment of the above-identified application filed via facsimile transmission on 08 April 2005.

The petition is **GRANTED**.

The application was held abandoned for failure to timely file a proper reply to the Office letter mailed 25 June 2004. A Notice of Abandonment was mailed 23 March 2005.

In support of the petition, petitioner has provided a copy of an amendment filed in response to the Office action of mail date 25 June 2004 and a copy of a postcard with a date stamp indicating receipt at the USPTO on 27 September 2004 of the above-mentioned amendment.

MPEP § 503 states:

> A postcard receipt which itemizes and properly identifies the items which are being filed serves as *prima facie* evidence of receipt in the USPTO of all the items listed thereon on the date stamped thereon by the USPTO.

The copy of the amendment and the postcard receipt bear an incorrect serial number (**09**/622,976 rather than **10**/622,976). Because the inventorship, title, and examiner correspond to application serial number 10/622,976, the Office will accept the paper as filed on the date stamped by the USPTO on the postcard receipt.

Petitioner has established that a response was filed on 27 September 2004. Thus, petitioner has established that a response was timely filed and the Abandonment was the result of Office error in not matching the response to the application file.

The petition is **GRANTED**. The Notice of Abandonment is **WITHDRAWN**.

The application file is being forwarded to the Technology Center support staff for processing of the amendment. After processing, the application will then be forwarded to the examiner for appropriate action.

Pinchus M. Laufer
Special Program Examiner
Technology Center 2100
Computer Architecture, Software and Information Security
571-272-3599

ds

UNITED STATES PATENT AND TRADEMARK OFFICE

UNITED STATES DEPARTMENT OF COMMERCE
United States Patent and Trademark Office
Address: COMMISSIONER FOR PATENTS
P.O. Box 1450
Alexandria, Virginia 22313-1450
www.uspto.gov

AVAYA INC.
MARGARET CARMICHAEL, DOCKETING SPECIALIST
1300 W. 120TH AVENUE
ROOM B1-F53
WESTMINSTER, CO 80234

Mail Date: 04/21/2010

| | | |
|---|---|---|
| **Applicant** | : Kevin Chan | : DECISION ON REQUEST FOR |
| **Patent Number** | : 7590693 | : RECALCULATION of PATENT |
| **Issue Date** | : 09/15/2009 | : TERM ADJUSTMENT IN VIEW |
| **Appliction No** | : 10/622,982 | : OF WYETH AND NOTICE OF INTENT TO |
| **Filed** | : 07/17/2003 | : ISSUE CERTIFICATE OF CORRECTION |
| | | : |

The Request for Recalculation is **GRANTED** to the extent indicated.

The patent term adjustment has been determined to be **1764** days. The USPTO will *sua sponte* issue a certificate of correction reflecting the amount of PTA days determined by the recalculation.

Prior to the issuance of the certificate of correction, the USPTO will afford patentee an opportunity to be heard and request reconsideration. Accordingly, patentee has **one month or thirty (30) days**, whichever is longer, to file a request for reconsideration of this patent term adjustment calculation. See 35 U.S.C. 154(b)(3)(B)(ii) and 37 CFR 1.322(a)(4). No extensions of time will be granted under 37 CFR 1.136.

Patentee should use document code PET.OP if electronically filing a request for reconsideration of this patent term adjustment calculation. The patentee must also include the information required by 37 CFR 1.705(b)(2) and the fee required by 37 CFR 1.18(e). If patentee does not file a timely request for reconsideration of this patent term adjustment calculation including the information required by 37 CFR 1.705(b)(2) and the fee required by 37 CFR 1.18(e), the USPTO will issue a certificate of correction reflecting the PTA determination noted above.

Patentee should be aware that in order to preserve the right to review in the United States District Court for the District of Columbia of the USPTO patent term adjustment determination, patentee must ensure that he or she also take the steps required under 35 U.S.C. 154(b)(4)(A) in a timely manner. Nothing in the request for recalculation should be construed as providing an alternative time frame for commencing a civil action under 35 U.S.C. 154(b)(4)(A).

Any questions concerning this decision should be directed to the Office of Patent Legal Administration at 571-272-7702.

UNITED STATES PATENT AND TRADEMARK OFFICE

COMMISSIONER FOR PATENTS
UNITED STATES PATENT AND TRADEMARK OFFICE
P.O. BOX 1450
ALEXANDRIA, VA 22313-1450
www.uspto.gov

MAR 15 2004

MAILED

MAR 15 2004

OFFICE OF THE DIRECTOR
TC 3600

PROCOPIO, CORY, HARGREAVES & SAVITCH LLP
530 B STREET
SUITE 2100
SAN DIEGO CA 92101

| | | |
|---|---|---|
| In re application of | : | **DECISION ON PETITION** |
| Arthur F. Woodrow | : | **TO MAKE SPECIAL** |
| Application No. 10/622,984 | : | **(APPLICANT'S AGE)** |
| Filed: July 18, 2003 | : | |
| For: SHOPPING CART AND METHOD OF USE | | |

This is a decision on the petition submitted on July 18, 2003 under 37 CFR 1.102 (c) to make the above-identified application special under the accelerated examination procedure set forth in MPEP 708.02, Section IV: Applicant's Age.

The petition is **GRANTED**.

An application may be accorded special status upon the filing of a petition providing evidence showing that the applicant is at least 65 years old. Such a showing may be provided by evidence such as a birth certificate or a statement from the applicant.

The evidence submitted with the petition is a copy of Mr. Woodrow's Arizona driving license which indicates that he is at least 65 years of age.

The examiner is directed (1) to make an interference search for possible interfering applications, (2) to promptly examine this application out of turn, and (3) if any interfering application is discovered, to examine such application simultaneously and state in the first official letter of such application that it is being taken out of turn because of a possible interference.

Petitioner is advised that this application will continue to be special, throughout its entire prosecution and pendency, including interference or appeal, if any, only if petitioner makes a prompt ***bona fide*** effort, in response to each Office action, to place the application in condition for allowance, even if it is necessary to conduct an interview with the examiner to accomplish this purpose.

**SUMMARY**: Petition to Make Special **GRANTED**.

Steven N. Meyers
Special Programs Examiner
Technology Center 3600
(703) 308-3868

SNM/mjz: 3/8/04

UNITED STATES PATENT AND TRADEMARK OFFICE

Commissioner for Patents
United States Patent and Trademark Office
P.O. Box 1450
Alexandria, VA 22313-1450
www.uspto.gov

FOLEY & LARDNER LLP
P.O. BOX 80278
SAN DIEGO CA 92138-0278

COPY MAILED
OCT 23 2006
OFFICE OF PETITIONS

| | | |
|---|---|---|
| In re Application of | : | |
| Sarkar | : | |
| Application No. 10/622,992 | : | DECISION ON PETITION |
| Filed: July 18, 2003 | : | TO WITHDRAW |
| Attorney Docket No. 028108/0202 | : | FROM RECORD |
| | : | |

This is a decision on the Request to Withdraw as attorney or agent of record under 37 C.F.R. § 1.36(b), filed October 26, 2005.

The request is **APPROVED**.

A grantable request to withdraw as attorney/agent of record must be signed by every attorney/agent seeking to withdraw or contain a clear indication that one attorney is signing on behalf of another/others. A request to withdraw will not be approved unless at least 30 (thirty) days would remain between the date of approval and the later of the expiration date of a time to file a response or the expiration date of the maximum time period which can be extended under 37 C.F.R. § 1.136(a).

The request was signed by G. Peter Albert on behalf of all attorneys of record who are associated with customer No. 30542.

All attorneys/agents associated with the Customer Number 30542 have been withdrawn.

Applicant is reminded that there is no attorney of record at this time.

The request to change the correspondence of record is not acceptable as the requested correspondence address is not that of: (1) the first named signing inventor; or (2) an intervening assignee of the entire interest under 37 C.F.R 3.71. All future communications from the Office will be directed to the first named signing inventor at the first copied address below until otherwise properly notified by the applicant.

In order to request or take action in a patent matter, the assignee must establish its ownership of the patent to the satisfaction of the Director. In this regard, a Statement under 37 CFR 3.73(b) must have either: (i) documentary evidence of a chain of title from the original owner to the assignee (*e.g.*, copy of an executed assignment), and a statement affirming that the documentary evidence of the chain of title from the original owner to the assignee was or concurrently is being submitted for recordation pursuant to § 3.11; or (ii) a statement specifying where documentary evidence of a chain of title from the original owner to the assignee is recorded in the assignment records of the Office (*e.g.*, reel and frame number).

Telephone inquiries concerning this decision should be directed to April Wise at 571-272-1642.

April M. Wise
Petitions Examiner
Office of Petitions

cc: Ajay Sarkar
10939 Caminito Alvarez
San Diego, 92126

cc: Mr. Brijesh Shah
Panacea Corporation
10930 Caminito Alvarez
San Diego, CA 92126

UNITED STATES PATENT AND TRADEMARK OFFICE

UNITED STATES DEPARTMENT OF COMMERCE
United States Patent and Trademark Office
Address: COMMISSIONER FOR PATENTS
P.O. Box 1450
Alexandria, Virginia 22313-1450
www.uspto.gov

| APPLICATION NUMBER | FILING OR 371 (c) DATE | FIRST NAMED APPLICANT | ATTY. DOCKET NO./TITLE |
|---|---|---|---|
| 10/622,992 | 07/18/2003 | Ajay Sarkar | 028108-0202 |

**CONFIRMATION NO. 3053**

*OC000000020842201*

*OC000000020842201*

30542
FOLEY & LARDNER LLP
P.O. BOX 80278
SAN DIEGO, CA 92138-0278

Date Mailed: 10/16/2006

## NOTICE REGARDING CHANGE OF POWER OF ATTORNEY

This is in response to the Power of Attorney filed 10/26/2005.

- The withdrawal as attorney in this application has been accepted. Future correspondence will be mailed to the new address of record. 37 CFR 1.33.

---

April M Wise

APRIL M WISE
OP (571) 272-1642

FORMER ATTORNEY/AGENT COPY

## SPE RESPONSE FOR CERTIFICATE OF CORRECTION

Paper No.: X

DATE : November 26,2007

TO SPE OF : ART UNIT 2851

SUBJECT : Request for Certificate of Correction for Appl. No.: 10/623,004 Patent No.: 7283200 B2

A response is requested with respect to a request for a certificate of correction.

With respect to the change(s) requested to correct Office and/or Applicant's errors, should the patent read as shown in the certificate of correction attached herewith or the COCIN document(s), in IFW images for the above-identified patented application? No new matter should be introduced, nor should the scope or meaning of the claims be changed.

If the response is for an IFW, within 7 days, please complete and forward the response, to the employee (named below) via scanning into application images, using document code COCX.

DO NOT SENT TO ATTORNEY

If the response is for a paper file wrapper, please complete the response and forward the response with the paper file wrapper, to the employee (named below), within 7 days, to:

**Certificates of Correction Branch (CofC)**
**South Tower - 9A22**
**Palm Location 7580**

You can fax the Directors/SPE response to 571-270-9990

*LAMONTE NEWSOME*

Certificates of Correction Branch

703-308-9390 ext. 112

Thank You For Your Assistance

**The request for issuing the above-identified correction(s) is hereby:**

Note your decision on the appropriate box.

- ☑ **Approved** — **All** changes apply.
- ☐ **Approved in Part** — Specify below which changes **do not** apply.
- ☐ **Denied** — State the reasons for denial below.

**Comments:** _____

SPE

2851
Art Unit

UNITED STATES PATENT AND TRADEMARK OFFICE

Commissioner for Patents
United States Patent and Trademark Office
P.O. Box 1450
Alexandria, VA 22313-1450
www.uspto.gov

meb

Mailed: 2-7-07

| | | |
|---|---|---|
| In re application of | : | |
| Krukonis et al. | : | DECISION ON |
| Serial No. 10/623,006 | : | PETITION |
| Filed: July 18, 2003 | : | |
| For: REDUCTION OF CONSTITUENTS IN TOBACCO | : | |

This is a decision on the PETITION UNDER 37 CFR 1.181 TO WITHDRAW THE FINALITY OF THE OFFICE ACTION, dated October 25, 2006.

On November 23, 2005, a non-final Office action was mailed to applicants. The Office action contained rejections under 35 USC 102 (b) and 103 (a) over Niven, Jr. et al. A reply to the Office action was filed on February 23, 2006. In the reply, various amendments to several of the claims including independent claim 1 were made. The amendments overcame the rejections to the claims over the Niven, Jr. et al. reference. Amendments added to independent claim 1 included a limitation requiring that the amount of constituent in the tobacco be dissolved in the subcritical fluid.

On April 25, 2006, a final Office action was mailed. All of the previous grounds of rejection were withdrawn and several new grounds of rejection were added which included a 35 USC 103 (a) rejection of the claims over newly cited art to Garner. The examiner stated in the office action that the new grounds of rejection were necessitated by Applicant's amendments to the claims and the Office action was made final. On September 25, 2006, Applicant submitted arguments against the art rejections and the finality of the April 25, 2006 office action. On October 13, 2006, the examiner send out an Advisory Action addressing the applicant's arguments. On October 25, 2006, the present petition was filed.

Petitioner has argued that the finality of the last Office action is improper. Petitioner argues that the new grounds of rejection were not necessitated by Applicant's amendments and further, that the claims were amended in a manner that could have been reasonably expected by the scope of the specification.

**DECISION**

The amendment to the claims requiring that the amount of constituent in the tobacco be dissolved in the subcritical fluid presented a limitation that was not present in the Niven, Jr. et al. reference thereby overcoming the rejections applied in the non-final rejection. It is noted that both of these claims were properly rejected over the Niven, Jr. et al. reference. It is clear that the

examiner withdrew the aforementioned rejections of all of the claims due to the amendments presented.

As set forth in the petition, the standard for making an Office action final is set forth in section 706.07(b) of the MPEP which states:

> A second or any subsequent action on the merits in any application...should not be made final if it includes a rejection, on prior art of record, of any claim amended to include limitations which should reasonably have been expected to be claimed.

In this case, the amendments presented could not have been reasonably expected by the examiner. The examiner would have no way of anticipating that such a limitation (i.e. that the amount of constituent in the tobacco is dissolved in the subcritical fluid) would be presented. Thus, even though the newly presented limitations narrowed the scope of the claims, all of the original claimed were properly rejected under 35 USC 102 (b) as well as 35 USC 103 and the amendments presented necessitated the new grounds of rejection because the examiner would not have reasonably expected such limitations to be claimed. Accordingly, the examiner properly made the April 25, 2006 Office action final.

The Petition is **DENIED**.

Jacqueline M. Stone

Jacqueline M. Stone, Director
Technology Center 1700
Chemical and Materials Engineering

JAMES D. DeCAMP, Ph.D.
CLARK & ELBING LLP
101 Federal Street
Boston, MA 02110

FILE COPY

UNITED STATES PATENT AND TRADEMARK OFFICE

UNITED STATES DEPARTMENT OF COMMERCE
United States Patent and Trademark Office
Address: COMMISSIONER FOR PATENTS
P.O. Box 1450
Alexandria, Virginia 22313-1450
www.uspto.gov

| APPLICATION NUMBER | FILING OR 371(c) DATE | FIRST NAMED APPLICANT | ATTY. DOCKET NO./TITLE |
|---|---|---|---|
| 10/623,026 | 07/17/2003 | Whay Sing Lee | SUNMP232 |

**CONFIRMATION NO. 4465**

*OC000000011709709*

32291
MARTINE & PENILLA, LLP
710 LAKEWAY DRIVE
SUITE 170
SUNNYVALE, CA 94085

Date Mailed: 01/16/2004

# RESPONSE TO REQUEST FOR CORRECTED FILING RECEIPT

**Software Limitations**

In response to your request for a corrected Filing Receipt, the Office is unable to comply with your request because of the software limitations as specified below:

- ☐ The title may be truncated if it consists of more than 500 characters (letters and spaces combined).
- ☐ Superscript and subscript are not possible. These characters will appear on the same line.
- ☐ The inventor information may be truncated if the family name consists of more than 50 characters (letters and spaces combined) and if the given name consists of more than 50 characters (letters and spaces combined).
- ☐ The inventor's residence allows for up to 40 characters (letters and spaces combined).
- ☐ The inventor's country of residence is taken from a preset listing of countries. This preset listing does not contain the country name that you have requested.
- ☐ The docket number allows a maximum of 25 characters.
- ☐ Foreign priority will appear on the Filing Receipt in the following order: **Country, Application number, Filing date**.
- ☐ The person signing on behalf of the deceased inventor is reflected on the Filing Receipt as the legal representative.
- ☐ Only one character per space is allowed. Therefore, punctuation that is usually placed above or below

a letter, such as an umlaut (ë), cannot be included on the Filing Receipt.

☑ The suffixes SR. and JR. will only appear in upper case.

☐ The semicolon following the assignee information cannot be deleted.

Haimanot Tegbasu

Customer Service Center
Initial Patent Examination Division (703) 308-1202

PART 3 - OFFICE COPY

UNITED STATES PATENT AND TRADEMARK OFFICE

Commissioner for Patents
United States Patent and Trademark Office
P.O. Box 1450
Alexandria, VA 22313-1450
www.uspto.gov

**MAXYGEN, INC.**
**INTELLECTUAL PROPERTY DEPARTMENT**
**515 GALVESTON DRIVE**
**REDWOOD CITY CA 94063**

COPY MAILED

FEB 0 2 2007

OFFICE OF PETITIONS

| | | |
|---|---|---|
| In re Application of | : | |
| Stemmer, Willem P.C. | : | |
| Application No. 10/623,036 | : | ON PETITION |
| Filed: July 18, 2003 | : | |
| Attorney Docket No. 0100.227US | : | |

This is a decision on the petition under 37 C.F.R. § 1.137(b), filed November 6, 2006, to revive the above-identified application.

The petition is **GRANTED.**

The petition satisfies the conditions for revival pursuant to the provisions of 37 CFR 1.137(b) in that (1) the reply in the form of an Amendment and a Terminal Disclaimer; (2) the petition fee; and (3) the required statement of unintentional delay have been received. Accordingly, the response has been accepted as having been unintentionally delayed.

This matter is being referred to Technology Center 1600 for further examination on the merits.

Telephone inquiries regarding this decision should be directed to the undersigned at (571) 272-3206.

Liana Walsh
Petitions Examiner
Office of Petitions

UNITED STATES PATENT AND TRADEMARK OFFICE

Commissioner for Patents
United States Patent and Trademark Office
P.O. Box 1450
Alexandria, VA 22313-1450
www.uspto.gov

**JOHN D. CONWAY, ESQ.**
**ABBOTT BIORESEARCH CENTER, INC.**
**100 RESEARCH DRIVE**
**WORCESTER MA 01605**

COPY MAILED

JAN 0 6 2005

OFFICE OF PETITIONS

| | | |
|---|---|---|
| In re Application of | : | |
| Banerjee et al. | : | |
| Application No. 10/623,039 | : | ON PETITION |
| Filed: July 18, 2003 | : | |
| Attorney Docket No. BPI-188 | : | |

This is a decision on the petition under 37 C.F.R. § 1.137(b), filed November 29, 2004, to revive the above-identified application.

The petition is **GRANTED.**

The above-identified application became abandoned for failure to reply in a timely manner to the Notice to File Missing Parts of Application (Notice) mailed October 20, 2003. The Notice set a period for reply of two (2) months from the mail date of the Notice. No extensions of time under the provisions of 37 CFR 1.136(a) were timely obtained. Accordingly, the above-identified application became abandoned on December 21, 2003. A Notice of Abandonment was mailed on October 22, 2004.

Petitioner has met the requirements to revive the above-identified application pursuant to 37 CFR 1.137(b).

An extension of time under 37 CFR 1.136 must be filed prior to the expiration of the maximum extendable period for reply. See In re Application of S., 8 USPQ2d 1630, 1631 (Comm'r Pats. 1988). Accordingly, since the $2080.00 extension of time fee submitted with the petition on November 29, 2004 was subsequent to the maximum extendable period for reply, this fee is unnecessary and will be credited to petitioner's deposit account as authorized.

A change of correspondence address was submitted on December 3, 2004. A courtesy copy of this decision is being mailed to the address listed on the instant petition. All future correspondence will be mailed solely to the address of record.

This matter is being referred to the Office of Initial Patent Examination for further processing.

Telephone inquiries regarding this decision should be directed to the undersigned at (571) 272-3282.

Liana Chase
Petitions Examiner
Office of Petitions
Office of the Deputy Commissioner
for Patent Examination Policy

cc: LAHIVE & COCKFIELD, LLP
28 STATE STREET
BOSTON, MA 02109

PTO/SB/66 (03-09)
Approved for use through 03/31/2012. OMB 0651-0016
U.S. Patent and Trademark Office: U.S. DEPARTMENT OF COMMERCE
Under the Paperwork Reduction Act of 1995, no persons are required to respond to a collection of information unless it displays valid OMB control number.

# PETITION TO ACCEPT UNINTENTIONALLY DELAYED PAYMENT OF MAINTENANCE FEE IN AN EXPIRED PATENT (37 CFR 1.378(c))

| Patent Number | Issue Date (YYYY-MM-DD) | Application Number | Filing Date (YYYY-MM-DD) | Docket Number (if applicable) |
|---|---|---|---|---|
| 6908382 | 2005-06-21 | 10623046 | 2003-07-18 | 97-035-C2 |

CAUTION: Maintenance fee (and surcharge, if any) payment must correctly identify: (1) the patent number and (2) the application number of the actual U.S. application leading to issuance of that patent to ensure the fee(s) is/are associated with the correct patent. 37 CFR 1.366(c) and (d).

SMALL ENTITY
☐ Patentee claims, or has previously claimed, small entity status. See 37 CFR 1.27.

LOSS OF ENTITLEMENT TO SMALL ENTITY STATUS
☒ Patentee is no longer entitled to small entity status. See 37 CFR 1.27(g)

| NOT Small Entity | | Small Entity | |
|---|---|---|---|
| Fee | Code | Fee | Code |
| ◉ 3 ½ year | (1551) | ○ 3 ½ year | (2551) |
| ○ 7 ½ year | (1552) | ○ 7 ½ year | (2552) |
| ○ 11 ½ year | (1553) | ○ 11 ½ year | (2553) |

SURCHARGE
The surcharge required by 37 CFR 1.20(i)(2) (Fee Code 1558) must be paid as a condition of accepting unintentionally delayed payment of the maintenance fee.

MAINTENANCE FEE (37 CFR 1.20(e)-(g))
The appropriate maintenance fee must be submitted with this petition.

STATEMENT
THE UNDERSIGNED CERTIFIES THAT THE DELAY IN PAYMENT OF THE MAINTENANCE FEE TO THIS PATENT WAS UNINTENTIONAL

PETITIONER(S) REQUEST THAT THE DELAYED PAYMENT OF THE MAINTENANCE FEE BE ACCEPTED AND THE PATENT REINSTATED

THIS PORTION MUST BE COMPLETED BY THE SIGNATORY OR SIGNATORIES

37 CFR 1.378(d) states: "Any petition under this section must be signed by an attorney or agent registered to practice before the Patent and Trademark Office, or by the patentee, the assignee, or other party in interest."

I certify, in accordance with 37 CFR 1.4(d)(4) that I am

◉ An attorney or agent registered to practice before the Patent and Trademark Office

○ A sole patentee

○ A joint patentee; I certify that I am authorized to sign this submission on behalf of all the other patentees.

○ A joint patentee; all of whom are signing this e-petition

○ The assignee of record of the entire interest

| Patent Practitioner | | | |
|---|---|---|---|
| A signature of the applicant or representative is required in accordance with 37 CFR 1.33 and 10.18. Please see 37 CFR 1.4(d) for the form of the signature | | | |
| Signature | /Michael Downs 50252/ | Date (YYYY-MM-DD) | 2009-08-03 |
| Name | Michael D. Downs | Registration Number | 50252 |

This collection of information is required by 37 CFR 1.378(c). The information is required to obtain or retain a benefit by the public which is to file (and by the USPTO to process) an application. Confidentiality is governed by 35 U.S.C. 122 and 37 CFR 1.11 and 1.14. This collection is estimated to take 1 hour to complete, including gathering, preparing, and submitting the completed application form to the USPTO. Time will vary depending upon the individual case. Any comments on the amount of time you require to complete this form and/ or suggestions for reducing this burden, should be sent to the Chief Information Officer, U.S. Patent and Trademark Office, U.S. Department of Commerce, P.O. Box 1450, Alexandria, VA 22313-1450. DO NOT SEND FEES OR COMPLETED FORMS TO THIS ADDRESS. **This form can only be used when in conjunction with EFS-Web. If this form is mailed to the USPTO, it may cause delays in reinstating the patent.**

# Privacy Act Statement

The Privacy Act of 1974 (P.L. 93-579) requires that you be given certain information in connection with your submission of the attached form related to a patent application or patent. Accordingly, pursuant to the requirements of the Act, please be advised that: (1) the general authority for the collection of this information is 35 U.S.C. 2(b)(2); (2) furnishing of the information solicited is voluntary; and (3) the principal purpose for which the information is used by the U.S. Patent and Trademark Office is to process and/or examine your submission related to a patent application or patent. If you do not furnish the requested information, the U.S. Patent and Trademark Office may not be able to process and/or examine your submission, which may result in termination of proceedings or abandonment of the application or expiration of the patent.

The information provided by you in this form will be subject to the following routine uses:

1. The information on this form will be treated confidentially to the extent allowed under the Freedom of Information Act (5 U.S.C. 552) and the Privacy Act (5 U.S.C. 552a). Records from this system of records may be disclosed to the Department of Justice to determine whether the Freedom of Information Act requires disclosure of these records.

2. A record from this system of records may be disclosed, as a routine use, in the course of presenting evidence to a court, magistrate, or administrative tribunal, including disclosures to opposing counsel in the course of settlement negotiations.

3. A record in this system of records may be disclosed, as a routine use, to a Member of Congress submitting a request involving an individual, to whom the record pertains, when the individual has requested assistance from the Member with respect to the subject matter of the record.

4. A record in this system of records may be disclosed, as a routine use, to a contractor of the Agency having need for the information in order to perform a contract. Recipients of information shall be required to comply with the requirements of the Privacy Act of 1974, as amended, pursuant to 5 U.S.C. 552a(m).

5. A record related to an International Application filed under the Patent Cooperation Treaty in this system of records may be disclosed, as a routine use, to the International Bureau of the World Intellectual Property Organization, pursuant to the Patent Cooperation Treaty.

6. A record in this system of records may be disclosed, as a routine use, to another federal agency for purposes of National Security review (35 U.S.C. 181) and for review pursuant to the Atomic Energy Act (42 U.S.C. 218(c)).

7. A record from this system of records may be disclosed, as a routine use, to the Administrator, General Services, or his/her designee, during an inspection of records conducted by GSA as part of that agency's responsibility to recommend improvements in records management practices and programs, under authority of 44 U.S.C. 2904 and 2906. Such disclosure shall be made in accordance with the GSA regulations governing inspection of records for this purpose, and any other relevant (i.e., GSA or Commerce) directive. Such disclosure shall not be used to make determinations about individuals.

8. A record from this system of records may be disclosed, as a routine use, to the public after either publication of the application pursuant to 35 U.S.C. 122(b) or issuance of a patent pursuant to 35 U.S.C. 151. Further, a record may be disclosed, subject to the limitations of 37 CFR 1.14, as a routine use, to the public if the record was filed in an application which became abandoned or in which the proceedings were terminated and which application is referenced by either a published application, an application open to public inspections or an issued patent.

9. A record from this system of records may be disclosed, as a routine use, to a Federal, State, or local law enforcement agency, if the USPTO becomes aware of a violation or potential violation of law or regulation.

# UNITED STATES PATENT AND TRADEMARK OFFICE

Commissioner for Patents
United States Patent and Trademark Office
P.O. Box 1450
Alexandria, VA 22313-1450
www.uspto.gov

In re Patent No. 6908382
Issue Date: June 21,2005
Application No. 10623046
Filed: July 18,2003
Attorney Docket No. 97-035-C2

:
:DECISION GRANTING PETITION
:UNDER 37 CFR 1.378(c)
:

This is a decision on the electronic petition, filed August 3,2009 ,under 37 CFR 1.378(c) to accept the unintentionally delayed payment of the 3.5 year maintenance fee for the above-identified patent.

The petition is **GRANTED**.

The maintenance fee is accepted, and the above-identified patent reinstated as of August 3,2009 .
This decision also constitutes notice that the fee has been accepted. An electronic copy of the petition and this decision has been created as an entry in the Image File Wrapper. Nevertheless, petitioner should print and retain an independent copy.

Telephone inquiries related to this electronic decision should be directed to the Electronic Business Center at 1-866-217-9197.

UNITED STATES PATENT AND TRADEMARK OFFICE

Commissioner for Patents
United States Patent and Trademark Office
P.O. Box 1450
Alexandria, VA 22313-1450
www.uspto.gov

STUART O. LOWRY
KELLY BAUERSFELD LOWRY & KELLEY, LLP
SUITE 1650
6320 CANGO AVENUE
WOODLAND HILLS, CA 91367

COPY MAILED

MAR 23 2005

OFFICE OF PETITIONS

| | | |
|---|---|---|
| In re Application of | : | |
| Bruce D. Burrows | : | |
| Application No. 10/623,053 | : | ON PETITION |
| Filed: July 17, 2003 | : | |
| Attorney Docket No. 43984-BGOLF | : | |

This is a decision on the petition under 37 CFR 1.137(b), filed March 10, 2005, to revive the above-identified application.

The petition is **GRANTED**.

The above-identified application became abandoned for failure submit the Issue fee in a timely manner in reply to the Notice of Allowance mailed December 7, 2004, which set a statutory period for reply of three (3) months. Accordingly, the above-identified application became abandoned on March 8, 2005.

Telephone inquiries concerning this decision should be directed to Irvin Dingle at (571) 272-3210.

This file is being forwarded to the Publishing Division.

Irvin Dingle
Petitions Examiner
Office of Petitions
Office of the Deputy Commissioner
for Patent Examination Policy

UNITED STATES PATENT AND TRADEMARK OFFICE

Commissioner for Patents
United States Patent and Trademark Office
P.O. Box 1450
Alexandria, VA 22313-1450
www.uspto.gov

MONOGRAM BIOSCIENCES
345 OYSTER POINT BOULEVARD
SOUTH SAN FRANCISCO, CA 94080

COPY MAILED
JUL 25 2006
OFFICE OF PETITIONS

| | |
|---|---|
| In re Application of | : |
| Po-Ying Chan-Hui et al | : |
| Application No. 10/623,057 | : DECISION ON PETITION |
| Filed: July 17, 2003 | : UNDER 37 CFR 1.137(b) |
| Attorney Docket No. 124.01US | : |

This is a decision on the petition under 37 CFR 1.137(b), filed May 26, 2006, to revive the above-identified application.

The petition is **GRANTED**.

This application became abandoned by operation of law for failure to timely pay the issue and publication fees on or before May 15, 2006, as required by the Notice of Allowance and Fee(s) Due, mailed February 13, 2006. Additionally, a "Notice of Drawing Inconsistency with Specification" was mailed April 14, 2006, which set a one month or thirty (30) day non-extendable period for reply. No reply to the Notices having been timely received, the date of abandonment of this application is May 16, 2006 (May 14, 2006, the due date, is a Sunday).

The petition satisfies the conditions for revival pursuant to the provisions of 37 CFR 1.137(b) in that (1) the $700 issue fee, the $300 publication fee, and the reply to the Notice of April 14, 2006; (2) the $750 petition fee; and (3) an adequate statement of unintentional delay have been received. Accordingly, the reply to the Notices of February 13, 2006 and April 14, 2006 is accepted as having been unintentionally delayed.

The application file does not indicate a change of address has been filed in this case, although the address given on the petition differs from the address of record. If appropriate, a change of address should be filed in this case in accordance with MPEP 601.03. A courtesy copy of this decision is being mailed to the address noted on the petition. However, until otherwise instructed, all future correspondence regarding this application will be mailed solely to the address of record.

Telephone inquiries concerning this decision should be directed to the undersigned at (571) 272-3218.

This matter is being referred to Publishing Division.

Frances Hicks
Petitions Examiner
Office of Petitions

cc:

David C. Pauling
Jones Day
222 East 41st Street
New York, NY 10017

UNITED STATES PATENT AND TRADEMARK OFFICE

Commissioner for Patents
United States Patent and Trademark Office
P.O. Box 1450
Alexandria, VA 22313-1450
www.uspto.gov

**ROBERT C. KLINGER**
**JACKSON WALKER LLP**
**2435 NORTH CENTRAL EXPRESSWAY**
**SUITE 600**
**RICHARDSON, TX 75080**

COPY MAILED
DEC 15 2004
OFFICE OF PETITIONS

| | | |
|---|---|---|
| In re Application of | : | |
| Ejaz Afzal et al | : | |
| Application No. 10/623,060 | : | NOTICE |
| Filed: July 18, 2003 | : | |
| Attorney Docket No. 101950-00136 | : | |

This is a notice regarding your request for acceptance of a fee deficiency submission under 37 CFR 1.28. On September 1, 1998, the Court of Appeals for the Federal Circuit held that 37 CFR 1.28(c) is the sole provision governing the time for correction of the erroneous payment of the issue fee as a small entity. **See DH Technology v. Synergystex International, Inc. 154 F.3d 1333, 47 USPQ2d 1865 (Fed. Cir. Sept. 1, 1998).**

The Office no longer investigates or rejects original or reissue applications under 37 CFR 1.56. **1098 Off. Gaz. Pat. Office 502 (January 3, 1989)**. Therefore, nothing in this Notice is intended to imply that an investigation was done.

Your fee deficiency submission under 37 CFR 1.28 is hereby **ACCEPTED**.

This application no longer qualifies for small entity status. Accordingly, all future fees must be paid at the large entity rate.

Inquiries related to this communication should be directed to the undersigned at (571) 272-3218.

Frances Hicks
Frances Hicks
Petitions Examiner
Office of Petitions
Office of the Deputy Commissioner
for Patent Examination Policy

UNITED STATES PATENT AND TRADEMARK OFFICE

Commissioner for Patents
United States Patent and Trademark Office
P.O. Box 1450
Alexandria, VA 22313-1450
www.uspto.gov

Mailed 10/21/04

wak
Paper No.

In re Application of
Oren V. Peterson
Serial No. 10/623,074
Filed: July 18, 2003
For: PROCESS AND APPARATUS FOR GENERATING HYDROGEN FROM OIL SHALE

DECISION
ON
PETITION
UNDER 708.02 (V)

This is a decision on the petition filed on July 18, 2003, requesting that the above-identified application be granted Special Status under Sections 37 C.F.R. 1.102 and MPEP 708.02.

The petition has been considered and found to comply with the requirements set forth under the above noted sections.

Accordingly, the petition is **GRANTED**.

William Krynski, Special Program Examiner
Technology Center 1700
Chemical and Materials Engineering

Karl R. Cannon
Clayton, Howarth & Cannon, P.C.
P.O. Box 1909
Sandy, UT 84091

FILE COPY

UNITED STATES PATENT AND TRADEMARK OFFICE

UNITED STATES DEPARTMENT OF COMMERCE
United States Patent and Trademark Office
Address: COMMISSIONER FOR PATENTS
P.O. Box 1450
Alexandria, Virginia 22313-1450
www.uspto.gov

| APPLICATION NUMBER | FILING OR 371(c) DATE | FIRST NAMED APPLICANT | ATTY. DOCKET NO./TITLE |
|---|---|---|---|
| 10/623,088 | 07/17/2003 | Walter Nixon | SUNMP233 |

**CONFIRMATION NO. 3301**

*OC000000011709590*

32291
MARTINE & PENILLA, LLP
710 LAKEWAY DRIVE
SUITE 170
SUNNYVALE, CA 94085

Date Mailed: 01/16/2004

# RESPONSE TO REQUEST FOR CORRECTED FILING RECEIPT

## Software Limitations

In response to your request for a corrected Filing Receipt, the Office is unable to comply with your request because of the software limitations as specified below:

- ☐ The title may be truncated if it consists of more than 500 characters (letters and spaces combined).
- ☐ Superscript and subscript are not possible. These characters will appear on the same line.
- ☐ The inventor information may be truncated if the family name consists of more than 50 characters (letters and spaces combined) and if the given name consists of more than 50 characters (letters and spaces combined).
- ☐ The inventor's residence allows for up to 40 characters (letters and spaces combined).
- ☐ The inventor's country of residence is taken from a preset listing of countries. This preset listing does not contain the country name that you have requested.
- ☐ The docket number allows a maximum of 25 characters.
- ☐ Foreign priority will appear on the Filing Receipt in the following order: **Country, Application number, Filing date**.
- ☐ The person signing on behalf of the deceased inventor is reflected on the Filing Receipt as the legal representative.
- ☐ Only one character per space is allowed. Therefore, punctuation that is usually placed above or below

a letter, such as an umlaut (ë), cannot be included on the Filing Receipt.

☑ The suffixes SR. and JR. will only appear in upper case.

☐ The semicolon following the assignee information cannot be deleted.

Haimanot Tegbasu

Customer Service Center
Initial Patent Examination Division (703) 308-1202

PART 3 - OFFICE COPY

UNITED STATES PATENT AND TRADEMARK OFFICE

UNITED STATES DEPARTMENT OF COMMERCE
United States Patent and Trademark Office
Address: COMMISSIONER FOR PATENTS
P.O. Box 1450
Alexandria, Virginia 22313-1450
www.uspto.gov

IV (TRANSMETA)
C/O MURABITO, HAO & BARNES LLP
TWO NORTH MARKET STREET
THIRD FLOOR
SAN JOSE, CA 95113

Mail Date: 04/21/2010

| | | |
|---|---|---|
| **Applicant** | : Guillermo Rozas | : DECISION ON REQUEST FOR |
| **Patent Number** | : 7606997 | : RECALCULATION of PATENT |
| **Issue Date** | : 10/20/2009 | : TERM ADJUSTMENT IN VIEW |
| **Appliction No** | : 10/623,101 | : OF WYETH AND NOTICE OF INTENT TO |
| **Filed** | : 07/18/2003 | : ISSUE CERTIFICATE OF CORRECTION |
| | | : |

The Request for Recalculation is **GRANTED** to the extent indicated.

The patent term adjustment has been determined to be **268** days. The USPTO will *sua sponte* issue a certificate of correction reflecting the amount of PTA days determined by the recalculation.

Prior to the issuance of the certificate of correction, the USPTO will afford patentee an opportunity to be heard and request reconsideration. Accordingly, patentee has **one month or thirty (30) days**, whichever is longer, to file a request for reconsideration of this patent term adjustment calculation. See 35 U.S.C. 154(b)(3)(B)(ii) and 37 CFR 1.322(a)(4). No extensions of time will be granted under 37 CFR 1.136.

Patentee should use document code PET.OP if electronically filing a request for reconsideration of this patent term adjustment calculation. The patentee must also include the information required by 37 CFR 1.705(b)(2) and the fee required by 37 CFR 1.18(e). If patentee does not file a timely request for reconsideration of this patent term adjustment calculation including the information required by 37 CFR 1.705(b)(2) and the fee required by 37 CFR 1.18(e), the USPTO will issue a certificate of correction reflecting the PTA determination noted above.

Patentee should be aware that in order to preserve the right to review in the United States District Court for the District of Columbia of the USPTO patent term adjustment determination, patentee must ensure that he or she also take the steps required under 35 U.S.C. 154(b)(4)(A) in a timely manner. Nothing in the request for recalculation should be construed as providing an alternative time frame for commencing a civil action under 35 U.S.C. 154(b)(4)(A).

Any questions concerning this decision should be directed to the Office of Patent Legal Administration at 571-272-7702.

UNITED STATES PATENT AND TRADEMARK OFFICE

Commissioner for Patents
United States Patent and Trademark Office
P.O. Box 1450
Alexandria, VA 22313-1450
www.uspto.gov

DARBY & DARBY P.C.
P. O. BOX 5257
NEW YORK NY 10150-5257

COPY MAILED

SEP 2 0 2004

OFFICE OF PETITIONS

In re Application of
Cin Kim
Application No. 10/623,104
Filed: July 18, 2003
Att'y Docket No. 4394/0M995

: DECISION GRANTING PETITION

This is a decision on the petition filed November 12, 2003, under 37 CFR 1.53, in response to the Notice of Incomplete Nonprovisional Application mailed October 22, 2003, requesting that the above identified application be accorded a filing date of July 18, 2003.

On July 18, 2003, the application was filed.

On October 22, 2003, the Office of Initial Patent Examination mailed a "Notice of Incomplete Nonprovisional Application" stating that the application had not been accorded a filing date because the application was deposited without drawings and that the filing date of the application would be the date of receipt of the drawings.

In response, on November 12, 2003 the present petition, and 4 sheets of drawings were filed. Petitioners argue that 4 sheets of drawings were filed with the other application papers on July 18, 2003. In support of the petition, a copy of petitioner's postcard receipt which shows an official USPTO date-stamp of July 18, 2003, and the above-identified application number, and acknowledges receipt of, *inter alia*, 4 sheets of drawings, was supplied with the present petition. Petitioner has also supplied a copy of 4 sheets of drawings. Petitioner requests that the application, including 4 sheets of drawings, be accorded a filing date of July 18, 2003.

Upon review of the record, no sheets of drawings deposited on July 18, 2003, have been located among the application papers. However, the evidence is convincing that the application papers deposited on July 18, 2003, included 4 sheets of drawings, which were subsequently misplaced in the USPTO. Therefore, the application, including the 4 sheets of drawings, was complete on filing and entitled to a filing date of July 18, 2003.

In view of the above, the petition is **GRANTED**.

The Notice of Incomplete Nonprovisional Application mailed October 22, 2003, is

withdrawn. Therefore, the petition fee in the amount of $130.00 will be credited to deposit account no. 04-0100.

The application is being returned to the Office of Initial Patent Examination for reprocessing with a filing date of July 18, 2003, using the application papers filed on July 18, 2003 and the 4 sheets of drawings supplied on November 12, 2003.

Telephone inquiries related to this decision should be directed to the undersigned Petitions Attorney at (703) 305-4497.

Patricia Faison-Ball

Patricia Faison-Ball
Senior Petitions Attorney
Office of Petitions

UNITED STATES PATENT AND TRADEMARK OFFICE

COMMISSIONER FOR PATENTS
UNITED STATES PATENT AND TRADEMARK OFFICE
P.O. BOX 1450
ALEXANDRIA, VA 22313-1450
www.uspto.gov

CHRISTOPHER BALZAN
AAGAARD AND BALZAN, LLP
674 COUNTY SQUARE DRIVE, SUITE 105
VENTURA, CA 93003

**COPY MAILED**

MAY 24 2006

**OFFICE OF PETITIONS**

| | | |
|---|---|---|
| In re Application of | : | |
| John JM Carrasco, et al. | : | |
| Application No. 10/623,115 | : | DECISION ON REQUEST |
| Filed: July 13, 2003 | : | TO WITHDRAW |
| Attorney Docket No. OVR/018-02 | : | FROM RECORD |
| | : | |

This is a decision on the Request to Withdraw as attorney or agent of record under 37 CFR §1.36(b), filed January 24, 2006.

The request is **NOT APPROVED** as moot.

A review of the file record indicates that the power of attorney to Christopher R. Balzan and all the attorneys/agents associated with Customer No. 31714 has been revoked by the assignee of the patent application on February 9, 2006. Accordingly, the request to withdraw under 37 CFR § 1.36(b) is moot.

All future communications from the Office will continue to be directed to the below-listed address until otherwise notified by applicant.

Telephone inquires concerning this decision should be directed to Sherry D. Brinkley at 571-272- 3204.

Sherry D. Brinkley
Petitions Examiner
Office of Petitions

Conferee: Amelia Au

cc: BROWN, RAYSMAN, MILLSTEIN, FELDER & STEINER LLP
900 THIRD AVENUE
NEW YORK, NY 10022

UNITED STATES PATENT AND TRADEMARK OFFICE

Commissioner for Patents
United States Patent and Trademark Office
P.O. Box 1450
Alexandria, VA 22313-1450
www.uspto.gov

Thomas A. O'Rourke
Bodner & O'Rourke, LLP
425 Broadhollow Road
Melville NY 11747

**COPY MAILED**

AUG 2 2 2005

**OFFICE OF PETITIONS**

In re Application of
Luke K. LIANG et al.
Application No. 10/623,120
Filed: July 18, 2003
Attorney Docket No. Vision 105P

DECISION ON PETITION
UNDER 37 CFR 1.137(b)

This is a decision on the petition under 37 CFR 1.137(b), filed July 5, 2005, to revive the above-identified application.

The petition is **GRANTED**.

The above-identified application became abandoned for failure to reply in a timely manner to the non-final Office action mailed September 22, 2004, which set a shortened statutory period for reply of three (3) months. No extensions of time under the provisions of 37 CFR 1.136(a) were obtained. Accordingly, the application became abandoned on December 23, 2004.

The petition satisfies the conditions for revival pursuant to the provisions of 37 CFR 1.137 (b) in that (1) the reply in the form of an amendment; (2) the petition fee of $750; and (3) the required statement of unintentional delay have been received. Accordingly, the reply to the non-final Office action of September 22, 2004 is accepted as having been unintentionally delayed.

Telephone inquiries concerning this decision should be directed to Amelia Au at (571) 272-7414. All other inquiries concerning either the examination or status of the application should be directed to the Technology Center.

The application file is being referred to Technology Center Art Unit 3634 for appropriate action.

Frances Hicks

Frances Hicks
Lead Petitions Examiner
Office of Petitions

UNITED STATES PATENT AND TRADEMARK OFFICE

Commissioner for Patents
United States Patent and Trademark Office
P.O. Box 1450
Alexandria, VA 22313-1450
www.uspto.gov

**THOMAS A. O'ROURKE**
**BODNER & O'ROURKE, LLP**
**425 BROADHOLLOW ROAD**
**MELVILLE, NY 11747**

**COPY MAILED**

JAN 0 8 2008

**OFFICE OF PETITIONS**

In re Application of :
Luke K. LIANG et al. :
Application No. 10/623,120 :
Filed: July 18, 2003 :
Attorney Docket No. Vision 105P :

DECISION ON PETITION

This is a decision on the petition under 37 CFR 1.137(b), filed October 25, 2007, to revive the above-identified application.

The petition is **GRANTED**.

The application became abandoned for failure to reply in a timely manner to the non-final Office action mailed, March 21, 2007, which set a shortened statutory period for reply of three (3) months. No extensions of time under the provisions of 37 CFR 1.136(a) was obtained. Accordingly, the application became abandoned on June 22, 2007.

The petition satisfies the conditions for revival pursuant to the provisions of 37 CFR 1.137(b) in that (1) the reply in the form of an amendment; (2) the petition fee $770; and (3) the required statement of unintentional delay have been received. Accordingly, the reply to the non-final Office action of March 21, 2007 is accepted as having been unintentionally delayed.

Telephone inquiries concerning this decision should be directed to the undersigned at (571) 272-4231.

The application file is being referred to Technology Center AU 3634 for appropriate action on the concurrently filed amendment.

Michelle R. Eason
Paralegal Specialist
Office of Petitions

UNITED STATES PATENT AND TRADEMARK OFFICE

Commissioner for Patents
United States Patent and Trademark Office
P.O. Box 1450
Alexandria, VA 22313-1450
www.uspto.gov

**THOMAS A. O'ROURKE**
**BODNER & O'ROURKE, LLP**
**425 BROADHOLLOW ROAD**
**MELVILLE, NY 11747**

**COPY MAILED**

MAR 2 2 2005

**OFFICE OF PETITIONS**

In re Application of :
Luke K. Liang et al :
Application No. 10/623,121 : ON PETITION
Filed: July 18, 2003 :
Attorney Docket No. Vision 103P :

This is a decision on the petition under 37 CFR 1.137(b), filed February 25, 2005, to revive the above-identified application.

The petition is **GRANTED.**

The above-identified application became abandoned for failure to reply in a timely manner to the non-final Office action mailed July 12, 2004, which set a shortened statutory period for reply of three (3) months. No extensions of time under the provisions of 37 CFR 1.136(a) were obtained. Accordingly, the above-identified application became abandoned on October 13, 2004.

It is not apparent whether the person signing the statement of unintentional delay was in a position to have firsthand or direct knowledge of the facts and circumstances of the delay at issue. Nevertheless, such statement is being treated as having been made as the result of a reasonable inquiry into the facts and circumstances of such delay. See37 CFR 10.18(b) and Changes to Patent Practice and Procedure; Final Rule Notice, 62 Fed. Reg. 53131, 53178 (October 10, 1997), 1203 Off. Gaz. Pat. Office 63, 103 (October 21, 1997). In the event that such an inquiry has not been made, petitioner must make such an inquiry. If such inquiry results in the discovery that it is not correct that the entire delay in filing the required reply from the due date for the reply until the filing of a grantable petition pursuant to 37 CFR 1.137(b) was unintentional, petitioner must notify the Office.

Telephone inquiries concerning this decision should be directed to Wan Laymon at (571) 272-3220.

This matter is being referred to Technology Center 3634.

Wan Laymon
Wan Laymon
Petitions Examiner
Office of Petitions
Office of the Deputy Commissioner
for Patent Examination Policy

UNITED STATES PATENT AND TRADEMARK OFFICE

COMMISSIONER FOR PATENTS
UNITED STATES PATENT AND TRADEMARK OFFICE
P.O. BOX 1450
ALEXANDRIA, VA 22313-1450
www.uspto.gov

ISABELLE MCANDREWS
PEAK INTERNATIONAL
38507 CHERRY STREET UNIT G
NEWARK, CA 94560

**COPY MAILED**

JAN 1 4 2005

**OFFICE OF PETITIONS**

In re Application of :
James D. Pylant, et al. :
Application No. 10/623,131 : NOTICE
Filed: July 14, 2003 :
Attorney Docket No. 067810/0303879 PI-017

This is a notice regarding your request for acceptance of a fee deficiency submission under 37 CFR 1.28. On September 1, 1998, the Court of Appeals for the Federal Circuit held that 37 CFR 1.28(c) is the sole provision governing the time for correction of the erroneous payment of the issue fee as a small entity. **See DH Technology v. Synergystex International, Inc. 154 F.3d 1333, 47 USPQ2d 1865 (Fed. Cir. Sept. 1, 1998).**

The Office no longer investigates or rejects original or reissue applications under 37 CFR 1.56. **1098 Off. Gaz. Pat. Office 502 (January 3, 1989).** Therefore, nothing in this Notice is intended to imply that an investigation was done.

Your fee deficiency submission under 37 CFR 1.28 is hereby **ACCEPTED**.

The application file does not indicate a change of address has been filed in this case, although the address given on the petition differs from the address of record. If appropriate, a change of address should be filed in this case in accordance with MPEP 601.03. A courtesy copy of this decision is being mailed to the address noted on the petition. However, until otherwise instructed, all future correspondence regarding this application will be mailed solely to the address of record.

Inquiries related to this communication should be directed to the Office of Petitions Staff at (571) 272-3204.

This file is being referred to the Technology Center Art Unit 3727 for further processing.

Sherry D. Brinkley
Petitions Examiner
Office of Petitions
Office of the Deputy Commissioner
for Patent Examination Policy

cc: PILLSBURY WINTHROP LLP
2475 HANOVER STREET
PALO ALTO, CA 94304-1114

UNITED STATES PATENT AND TRADEMARK OFFICE

Commissioner for Patents
United States Patent and Trademark Office
P.O. Box 1450
Alexandria, VA 22313-1450
www.uspto.gov

DARBY & DARBY PC
805 THIRD AVENUE
NEW YORK, NY 10022

COPY MAILED

NOV 16 2005

OFFICE OF PETITIONS

| | |
|---|---|
| In re Application of | : |
| Andrea Leone-Bay et al | : |
| Application No. 10/623,142 | : DECISION GRANTING PETITION |
| Filed: July 18, 2003 | : UNDER 37 CFR 1.313(c)(2) |
| Attorney Docket No. 01946/100B035-USD | : |

This is a decision on the petition, filed November 7, 2005, under 37 CFR 1.313(c)(2) to withdraw the above-identified application from issue after payment of the issue fee.

The petition is **GRANTED**.

The above-identified application is withdrawn from issue for consideration of a submission under 37 CFR 1.114 (request for continued examination). See 37 CFR 1.313(c)(2).

***Petitioner is advised that the issue fee paid on February 25, 2005 in the above-identified application cannot be refunded. If, however, the above-identified application is again allowed, petitioner may request that it be applied towards the issue fee required by the new Notice of Allowance.***[1]

Telephone inquiries should be directed to the undersigned at (571) 272-3218.

This matter is being referred to Technology Center AU 1621 for processing of the request for continued examination under 37 CFR 1.114 and for consideration of the concurrently filed amendment.

Frances Hicks
Petitions Examiner
Office of Petitions

---

[1] *The request to apply the issue fee to the new Notice may be satisfied by completing and returning the new Issue Fee Transmittal Form PTOL-85(b) (along with any balance due or the amount due at the time of payment), which includes the following language thereon: "Commissioner for Patents is requested to apply the Issue Fee and Publication Fee (if any) or re-apply any previously paid issue fee to the application identified above." Petitioner is advised that, whether a fee is indicated as being due or not, the Issue Fee Transmittal Form* ***must*** *be completed and timely submitted to avoid abandonment. Note the language in bold text on the first page of the Notice of Allowance and Fee(s) Due (PTOL-85).*

UNITED STATES PATENT AND TRADEMARK OFFICE

COMMISSIONER FOR PATENTS
UNITED STATES PATENT AND TRADEMARK OFFICE
P.O. BOX 1450
ALEXANDRIA, VA 22313-1450
www.uspto.gov

T1.

3651

Michael Best & Friedrich LLP
100 East Wisconsin Avenue
Milwaukee WI 53202-4108

**COPY MAILED**

**JAN 3 0 2004**

**OFFICE OF PETITIONS**

In re Application of
Kuhne, Quadracci & Erdmann
Application No. 10/623,144
Filed: July 18, 2003
Attorney Docket No. 077077-9144-00
For: PRODUCT TRANSFER SYSTEM AND METHOD

: DECISION ACCORDING STATUS
: UNDER 37 CFR 1.47(a)

This is in response to the petition under 37 CFR 1.47(a), filed November 12, 2003 (certificate of mailing date November 10, 2003).

The petition is granted.

Petitioners have shown that the non-signing inventor, Brian Erdmann, has refused to join in the filing of the above-identified application after having been presented with the application papers. Specifically, the declaration of Billie Jean Smith establishes that the non-signing inventor was successfully e-mailed the application papers, including the specification, claims and drawings, but expressly refused to review the application papers and sign the declaration. Petitioners have submitted a declaration in compliance with 37 CFR 1.63 and 1.64.

This application and papers have been reviewed and found in compliance with 37 CFR 1.47(a). This application is hereby accorded Rule 1.47(a) status.

As provided in Rule 1.47(c), this Office will forward notice of this application's filing to the non-signing inventor at the address given in the petition. Notice of the filing of this application will also be published in the Official Gazette.

After this decision is mailed, the above-identified application will be forwarded to Technology Center 3600 for examination in due course.

Telephone inquiries should be directed to the undersigned at (703) 308-6712.

E. Shirene Willis

E. Shirene Willis
Senior Petitions Attorney
Office of Petitions

UNITED STATES PATENT and TRADEMARK OFFICE
UNDER SECRETARY OF COMMERCE FOR INTELLECTUAL PROPERTY AND
DIRECTOR OF THE UNITED STATES PATENT AND TRADEMARK OFFICE
WASHINGTON, D.C. 20231
WWW.USPTO.GOV

Mailed: APR 18 2005

CHK
Paper No.

*In re* Application of Thies et al.
Serial No.: 10/623,153
Filed: July 21, 2003

**DECISION ON PETITION UNDER** *37 CFR 1.48(a)*

Title: RADIATION CURABLE COMPOSITION AND RAPID PROTOTYPING PROCESS USING THE SAME

This is a decision on the PETITION TO CORRECT INVENTORSHIP IN A NON-PROVISIONAL PATENT APPLICATION filed March 1, 2005 to correct inventorship under 37 CFR 1.48(a) by adding the names of Xiarong You to the list of inventors of the instant application.

It is noted that the applicant has met the requirements of 37 C.F.R. § 1.48(a) by (1) submitting a request to correct the inventorship that sets forth the desired inventorship change; (2) providing a statement from each person being added as an inventor that the error in inventorship occurred without deceptive intention on his or her part; (3) providing a declaration of the actual inventors as required by 37 C.F.R. § 1.63; (4) providing the processing fee set forth in 1.17(i); and, (5) providing the written consent of the assignee.

The request is **GRANTED**.

The application file is being forwarded to the appropriate section of the Patent and Trademark Office for correction of the record.

Cynthia H. Kelly
Supervisory Patent Examiner
Art Unit 1752
Technology Center 1700

John E. Mauk
Mayer, Brown, Rowe and Maw
1909 K Street NW
Washington, D.C. 20006

UNITED STATES PATENT AND TRADEMARK OFFICE

COMMISSIONER FOR PATENTS
UNITED STATES PATENT AND TRADEMARK OFFICE
P.O. BOX 1450
ALEXANDRIA, VA 22313-1450
www.uspto.gov
DW 02-04

JAGTIANI + GUTTAG
10363-A DEMOCRACY LANE
FAIRFAX VA 22030

**COPY MAILED**

**FEB 25 2004**

**OFFICE OF PETITIONS**

| | | |
|---|---|---|
| In re Application of | : | |
| Buckingham et al. | : | |
| Application No. 10/623,186 | : | DECISION GRANTING PETITION |
| Filed: 21 July, 2003 | : | |
| Attorney Docket No. NOES-0001-1 | : | |

This is a decision on the petition, filed on 21 October, 2003, and supplemented on 10 February, 2004, under 37 CFR 1.137(f) which is treated as a petition to revive the above-identified nonprovisional application under the unintentional provisions of 37 CFR 1.137(b).

The petition is **GRANTED**.

Petitioner states that the present nonprovisional application is the subject of a foreign or international application filed on 22 July, 2003. However, the U.S. Patent and Trademark Office was unintentionally not notified of this filing within 45 days subsequent to the filing of the subject application in a foreign country.

In view of the above, this application became abandoned pursuant to 35 U.S.C. § 122(b)(2)(B)(iii) and 37 CFR 1.213(c) for failure to timely notify the Office of the filing of an application in a foreign country, or under a multilateral international agreement, that requires publication of applications 18 months after filing.

A petition under 37 CFR 1.137(f) must be accompanied by:

(1) the reply which is met by the notification of such filing in a foreign country or under a multinational treaty;
(2) the petition fee as set forth in 37 CFR 1.17(m); and

(3) a statement that the entire delay in filing the required reply from the due date of the reply until the filing of a grantable petition was unintentional.

The present petition has been found to be in compliance with 37 CFR 1.137(f). Accordingly, the failure to timely notify the Office of a foreign or international filing within 45 days after the date of filing of such foreign or international application as provided by 35 U.S.C. § 122(b)(2)(B)(i) has been rescinded. It is noted that petitioner filed a Request to Rescind the Nonpublication Request on 21 October, 2003. A corrected filing receipt showing that the publication date has not yet been determined is enclosed for petitioners' reference

Counsel's deposit account, No. 10-0233, has been charged the petition fee of $665.00.

This decision is being forwarded to the Office of Initial Patent Examination for further processing.

Any inquiries concerning this decision may be directed to the undersigned at 703.308.6918.

D Wood

Douglas I. Wood
Senior Petitions Attorney
Office of Petitions

Encl: Corrected Filing Receipt

UNITED STATES PATENT AND TRADEMARK OFFICE

Commissioner for Patents
United States Patent and Trademark Office
P.O. Box 1450
Alexandria, VA 22313-1450
www.uspto.gov

**COPY MAILED**

AUG 3 1 2007

**OFFICE OF PETITIONS**

Amylin Pharmaceuticals, Inc
9360 Towne Center Drive
San Diego, CA 92121

In re Application of
De Paoli et al.
Application No. 10/623,189
Patent No. 7,183,254
Filed: July 18, 2003
Attorney Docket: 1311US-CON

: DECISION DISMISSING PETITION

This decision is in response to Applicants' "APPLICATION FOR PATENT TERM ADJUSTMENT under 37 CFR 1.705(d)" timely[1] filed on March 29, 2007 requesting that the Patent Term Adjustment be adjusted from a determination of 284 days to a determination of 495 days.

Patentees' petition is **DISMISSED**.

Patentees argue that the Office erred in failing to provide an adjustment for over 3 years to issue from the from the filing of the application under 37 CFR 1.704(c)(10). Patentees assert that the proper amount of PTA related to the 3-year provision is two hundred and eleven(211) days. Patentees assert that the two hundred and eleven (211) days should be added to the 284 days provided to applicants. Patentees do not contest the 481 days awarded pursuant to 37 CFR 1.702(a)(1) or the (5) and (70) day reductios under 37 CFR 1.704(b) days awarded to patentees pursuant to 37 CFR 1.702(a)(4).

Patentees arguments are not persuasive. Patentees are advised that if an application is entitled to an adjustment under 35 U.S.C. 154(b)(1)(B), the entire period during which the application (except for periods excluded under 35 U.S.C. 154(b)(1)(B)(i)-(iii)), and not just the period beginning three years after the actual filing date of the application, is the period of delay under 35 U.S.C. 154(b)(1)(B) in determining whether periods of delay overlap under 35 U.S.C. 154(b)(2)(A). Thus, any days of delay for Office issuance of the patent more than 3 years after the filing date of the application which overlap with the days of patent term adjustment accorded prior to the issuance of the patent will not result in any additional patent term adjustment. See 35 U.S.C. 154(b)(1)(B), 35 U.S.C. 154(b)(2)(A), and 37 CFR § 1.703(f). See also *Revision of Patent Term Extension and Patent Term Adjustment Provisions*; *Final Rule*, 69 Fed. Reg. 21704 (April 22, 2004). Since the Office delays under 37 CFR 1.702(a)(1) and (a)(4) are greater than the delay for 37 CFR 1.702(b), applicants will receive no additional PTA time.

[1]Patent issued on February 27, 2007.

Application No. 10/623,189

After review of this decision, this application will be forwarded to the file repository for storage of such patented file.

The Office acknowledges the receipt of $200.00 for the application for patent term adjustment (petition). No additional fees are required by the Office.

Any questions concerning the issuance of this patent should be directed to Kery A. Fries, Office of Patent Legal Administration, Office of Deputy Commissioner for Patent Examination Policy at 571-272-7757

Kery A. Fries
Senior Legal Advisor
Office of Patent Legal Administration
Office of Deputy Commissioner
for Patent Examination Policy

cc: PAIR calculation

Day : Thursday
Date: 8/30/2007

PALM INTRANET

Time: 12:47:55

| PTA Calculations for Application: 10/623189 | | | |
|---|---|---|---|
| Application Filing Date: | 07/18/2003 | PTO Delay (PTO): | 481 |
| Issue Date of Patent: | 02/27/2007 | Three Years: | 0 |
| Pre-Issue Petitions: | 0 | Applicant Delay (APPL): | 197 |
| Post-Issue Petitions: | 0 | Total PTA (days): | 284 |
| PTO Delay Adjustment: | 0 | | |

**File Contents History**

| Number | Date | Contents Description | PTO | APPL | START |
|---|---|---|---|---|---|
| 66.5 | 02/07/2007 | PTA 36 MONTHS | | | |
| 66 | 02/27/2007 | PATENT ISSUE DATE USED IN PTA CALCULATION | | | |
| 65 | 01/26/2007 | EXPORT TO FINAL DATA CAPTURE | | | |
| 64 | 01/25/2007 | DISPATCH TO FDC | | | |
| 63 | 01/16/2007 | FINISHED INITIAL DATA CAPTURE | | | |
| 62 | 01/17/2007 | DISPATCH TO FDC | | | |
| 61 | 11/29/2006 | ISSUE FEE PAYMENT VERIFIED | | | |
| 60 | 11/29/2006 | ISSUE FEE PAYMENT RECEIVED | | | |
| 59 | 12/06/2006 | REVERSAL OF ISSUE FEE PAYMENT | | | |
| 58 | 11/29/2006 | RESPONSE TO REASONS FOR ALLOWANCE | | | |
| 57 | 12/04/2006 | APPLICATION IS CONSIDERED READY FOR ISSUE | | | |
| 56 | 11/29/2006 | ISSUE FEE PAYMENT VERIFIED | | | |
| 55 | 10/04/2006 | MAIL MISCELLANEOUS COMMUNICATION TO APPLICANT | | | |
| 54 | 09/28/2006 | MISCELLANEOUS COMMUNICATION TO APPLICANT - NO ACTION COUNT | | | |
| 53 | 09/14/2006 | CORRESPONDENCE ADDRESS CHANGE | | | |
| 52 | 09/14/2006 | CHANGE IN POWER OF ATTORNEY (MAY INCLUDE ASSOCIATE POA) | | | |
| 51 | 09/12/2006 | SEQUENCE FORWARDED TO PUBS ON TAPE | | | |
| 50 | 09/01/2006 | EXPORT TO INITIAL DATA CAPTURE | | | |
| 49 | 08/29/2006 | MAIL NOTICE OF ALLOWANCE | | | |
| 48 | 08/29/2006 | MAIL EXAMINER'S AMENDMENT | | | |
| 47 | 08/25/2006 | NOTICE OF ALLOWANCE DATA VERIFICATION COMPLETED | | | |
| 46 | 08/25/2006 | EXAMINER'S AMENDMENT COMMUNICATION | | | |

| | | | | | |
|---|---|---|---|---|---|
| 45 | 08/25/2006 | ISSUE REVISION COMPLETED | | | |
| 44 | 08/25/2006 | DOCUMENT VERIFICATION | | | |
| 43 | 08/25/2006 | NOTICE OF ALLOWABILITY | | | |
| 42 | 07/05/2006 | EXAMINER INTERVIEW SUMMARY RECORD (PTOL - 413) | | | |
| 40 | 08/21/2006 | CORRESPONDENCE ADDRESS CHANGE | | | |
| 39 | 07/13/2006 | MAIL NON-FINAL REJECTION | | | |
| 38 | 07/10/2006 | NON-FINAL REJECTION | | | |
| 37 | 06/26/2006 | INFORMATION DISCLOSURE STATEMENT CONSIDERED | | | |
| 36 | 06/26/2006 | INFORMATION DISCLOSURE STATEMENT (IDS) FILED | | 70 | 32 |
| 35 | 01/16/2004 | INFORMATION DISCLOSURE STATEMENT CONSIDERED | | | |
| 34 | 11/14/2003 | INFORMATION DISCLOSURE STATEMENT CONSIDERED | | | |
| 33 | 04/26/2006 | DATE FORWARDED TO EXAMINER | | | |
| 32 | 04/17/2006 | RESPONSE TO ELECTION / RESTRICTION FILED | | 5 | 30 |
| 31 | 04/17/2006 | REQUEST FOR EXTENSION OF TIME - GRANTED | | | |
| 30 | 01/12/2006 | MAIL RESTRICTION REQUIREMENT | 481 | | -1 |
| 29 | 01/09/2006 | REQUIREMENT FOR RESTRICTION / ELECTION | | | |
| 28 | 11/15/2004 | IFW TSS PROCESSING BY TECH CENTER COMPLETE | | | |
| 27 | 11/15/2004 | CASE DOCKETED TO EXAMINER IN GAU | | | |
| 26 | 01/16/2004 | REFERENCE CAPTURE ON IDS | | | |
| 25 | 01/16/2004 | INFORMATION DISCLOSURE STATEMENT (IDS) FILED | | | |
| 24 | 11/24/2003 | PRELIMINARY AMENDMENT | | | |
| 23 | 11/14/2003 | REFERENCE CAPTURE ON IDS | | | |
| 22 | 11/14/2003 | INFORMATION DISCLOSURE STATEMENT (IDS) FILED | | | |
| 21 | 10/19/2004 | APPLICATION RETURN FROM OIPE | | | |
| 20 | 10/19/2004 | APPLICATION RETURN TO OIPE | | | |
| 19 | 10/19/2004 | APPLICATION RETURN FROM OIPE | | | |
| 18 | 10/19/2004 | APPLICATION IS NOW COMPLETE | | | |
| 17 | 10/19/2004 | APPLICATION RETURN TO OIPE | | | |
| 16 | 10/19/2004 | APPLICATION DISPATCHED FROM OIPE | | | |
| 15 | 10/19/2004 | APPLICATION IS NOW COMPLETE | | | |
| | | PAYMENT OF ADDITIONAL FILING | | | |

| | | | | | |
|---|---|---|---|---|---|
| 14 | 09/24/2004 | FEE/PREEXAM | | 122 | 8 |
| 11 | 07/18/2003 | CLAIM PRELIMINARY AMENDMENT | | | |
| 9 | 09/24/2004 | A STATEMENT BY ONE OR MORE INVENTORS SATISFYING THE REQUIREMENT UNDER 35 USC 115, OATH OF THE APPLIC | | | |
| 8 | 02/25/2004 | NOTICE MAILED--APPLICATION INCOMPLETE--FILING DATE ASSIGNED | | | |
| 6 | 11/07/2003 | CLEARED BY L&R (LARS) | | | |
| 5 | 10/09/2003 | INTENTIONALLY REFERRED BY OIPE OR L&R | | | |
| 4 | 09/16/2003 | IFW SCAN & PACR AUTO SECURITY REVIEW | | | |
| 3 | 07/31/2003 | CRF IS GOOD TECHNICALLY / ENTERED INTO DATABASE | | | |
| 2 | 07/18/2003 | CRF DISK HAS BEEN RECEIVED BY PREEXAM / GROUP / PCT | | | |
| 1 | 07/18/2003 | INITIAL EXAM TEAM NN | | | |

**Search Another: Application#** Search

**EXPLANATION OF PTA CALCULATION**

**EXPLANATION OF PTE CALCULATION**

To go back use Back button on your browser toolbar.

Back to PALM | ASSIGNMENT | OASIS | Home page

UNITED STATES PATENT AND TRADEMARK OFFICE

Commissioner for Patents
United States Patent and Trademark Office
P.O. Box 1450
Alexandria, VA 22313-1450
www.uspto.gov

May 21, 2008

Michael D. Ruse
AMYLIN PHARMACEUTICALS, INC.
9360 Towne Centre Drive
San Diego, CA 92121

Patent No.: 7,183,254 B2
Application No.: 10/623,189
Inventor(s): DePaoli, et al.
Issued: February 27, 2007
Title: **USE OF LEPTIN FOR TREATING HUMAN LIPOATROPHY AND METHOD OF DETERMINING PREDISPOSITION TO SAID TREATMENT**

Re: Request for Certificate of Correction

Consideration has been given your request for the issuance of a certificate of correction for the above-identified patent under the provisions of Rule(s) 1.322 and/or 1.323.

Assignees' names and addresses (assignment data) printed in a patent, are based *solely* on information supplied in the appropriate space for identifying the assignment data, i.e., item 3 of the Issue Fee Transmittal Form PTOL-85B. Granting of a request under 37 CFR 3.81(b) is required to correct applicant's error providing ***incorrect or erroneous*** assignment data, *before* issuance of a Certificate of Correction, under 37 CFR 1.323 *(see Manual of Patent Examining Procedures (M.P.E.P) Chp.1400, sect. 1481).* This procedure is required *at any time after the issue fee is paid,* including after issuance of the patent.

In view of the foregoing, your request, in this matter, is hereby denied.

A request to correct the Assignee under 37 CFR 3.81(b) should include:

A. **the processing fee set forth in 37 CFR 1.117(h) (currently $130);**
B. a statement that the failure to include the correct assignee name on the PTOL-85B was inadvertent; and
C. a copy of the Notice of Recordation of Assignment Document, reflecting the reel and frame number where the assignment(s) is recorded and/or reflecting proof of *the date* the assignment was submitted for recordation.

*In the Request*, Applicant(s) may request that the file be forwarded to Certificates of Correction Branch, for issuance of a Certificate of Correction, if the Request is granted.

Any request under 37 CFR 3.81(b) should be directed to the following address or facsimile number:

| | |
|---|---|
| By mail: | Mail Stop PETITIONS<br>Commissioner for Patents<br>Post Office Box 1450<br>Alexandria, VA 22313-1450 |
| By hand: | Customer Service Window<br>Mail Stop Petitions<br>Randolph Building<br>401 Dulany Street<br>Alexandria, VA 22314 |
| By fax: | (571) 273-0025<br>ATTN: Office of Petitions |

If a fee (currently $100) was previously submitted for consideration of a Request for Certificate of Correction, under CFR 1.323, to correct assignment data, no additional fee is required.

**Virginia Tolbert**
For Mary Diggs, Supervisor
Decisions & Certificate of Correction Branch
(703) 305-8309 or (703) **308-9390 ext 113**

vt

UNITED STATES PATENT AND TRADEMARK OFFICE

Commissioner for Patents
United States Patent and Trademark Office
P.O. Box 1450
Alexandria, VA 22313-1450
www.uspto.gov

INTELLECTUAL PROPERTY DEPARTMENT
AMYLIN PHARMACEUTICALS, INC.
9360 TOWNE CENTRE DRIVE
SAN DIEGO CA 92121

MAILED

MAY 28 2009

OFFICE OF PETITIONS

In re Patent No. 7,183,254 :
Issued: February 27, 2007 :
Application No. 10/623,189 : ON PETITION
Filed: July 18, 2003 :
Attorney Docket Number: **1311US-CON** :

This is a decision on the petition, filed November 3, 2008, under 37 CFR 1.183 and 1.323 which is treated under 37 CFR 3.81(b)[1], to correct the assignee's name on the front of the Patent.

The petition is **GRANTED**.

Petitioner states that the names of the second and third assignees, were inadvertently not included on the Fee(s) Transmittal form PTOL-85(b) at the time of payment of the issue fee. Accordingly, petitioner requests that a certificate of correction be issued to reflect the name of the second assignee on the front page of the Letters Patent.

37 CFR 3.81(b), effective June 25, 2004, reads:

> *After payment of the issue fee:* Any request for issuance of an application in the name of the assignee submitted after the date of payment of the issue fee, and any request for a patent to be corrected to state the name of the assignee, must state that the assignment was submitted for recordation as set forth in § 3.11 before issuance of the patent, and must include a request for a certificate of correction under § 1.323 of this chapter (accompanied by the fee set forth in § 1.20(a) and the processing fee set forth in § 1.17(i) of this chapter.

Office assignment records reflect that THE GOVERNMENT OF THE UNITED STATES OF AMERICA, AS REPRESENTED BY THE SECRETARY, DEPARTMENT OF

---

[1] *See* Official Gazette of June 22, 2004

HEALTH AND HUMAN SERVICES and the BOARD OF REGENTS, THE UNIVERSITY OF TEXAS SYSTEM, are also assignees of record. Accordingly, as the request complies with the provisions of 37 CFR 3.81(b), it would be appropriate for a certificate of correction to issue.

The petition fee and the fee for the certificate of correction have been properly applied.

Inquiries concerning this decision should be directed to the undersigned at (571) 272-3212. Any questions concerning the issuance of a certificate of correction should be directed to the Certificates of Correction Branch at (703) 305-8309.

This file is being referred to the Certificates of Correction Branch for issuance of a certificate of correction.

Patricia Faison-Ball

Patricia Faison-Ball
Senior Petitions Attorney
Office of Petitions

UNITED STATES PATENT AND TRADEMARK OFFICE

Commissioner for Patents
United States Patent and Trademark Office
P.O. Box 1450
Alexandria, VA 22313-1450
www.uspto.gov

Hologic Patent Department
attn; Darry Pattinson
Sr. IP Paralegal
250 Campus Drive
Marlborough MA 01752

**COPY MAILED**

NOV 0 6 2008

**OFFICE OF PETITIONS**

| | | |
|---|---|---|
| In re Application of | : | |
| Snoeren et al. | : | |
| Application No. 10/623191 | : | |
| Filing or 371(c) Date: 07/18/2003 | : | ON PETITION |
| Attorney Docket Number: | : | |
| 19.033011 (R-232) | : | |

This is a decision on the petition under 37 CFR 1.137(b), filed July 21, 2008, to revive the above-identified application.

This Petition is hereby **dismissed**.

Any further petition to revive the above-identified application must be submitted within TWO (2) MONTHS from the mail date of this decision. Extensions of time under 37 CFR 1.136(a) are permitted. The reconsideration request should include a cover letter entitled "Request for Reconsideration of Petition under [insert the applicable code section]". This is **not** final agency action within the meaning of 5 U.S.C. § 704.

The above-identified application became abandoned for failure to timely and properly reply to the final Office action, mailed December 17, 2007. The Office action set a three (3) month period for reply from the mail date of the Office action. Extensions of time were available under 37 CFR 1.136(a). No reply having been received, the application became abandoned on March 18, 2008. A Notice of Abandonment was mailed July 17, 2008.

Applicant files the present petition, and an Amendment in response to the Office action.

**Applicable law, Rules and MPEP**

A grantable petition under 37 CFR 1.137(b) must be accompanied by: (1) the required reply, unless previously filed; (2) the petition fee as set forth in 37 CFR 1.17(m); (3) a statement that the entire delay in filing the required reply from the due date for the reply until the filing of a grantable petition pursuant to 37 CFR 1.137(b) was unintentional; and (4) any terminal disclaimer (and fee as set forth in 37 CFR 1.20(d)) required by 37 CFR 1.137(d). Where there is

a question as to whether either the abandonment or the delay in filing a petition under 37 CFR 1.137 was unintentional, the Director may require additional information. See MPEP 711.03(c)(II)(C) and (D). The instant petition lacks item(s) (1).

**Analysis and conclusion**

The Examiner has reviewed the Amendment filed with the petition, and concluded that the Amendment fails to place the application in condition for allowance.

While a power of attorney and change of address has been filed in this case, because the address given on the petition differs from the address of record, a courtesy copy of this decision is being mailed to the address noted on the petition. All future correspondence regarding this application will be mailed solely to the address of record.

Further correspondence with respect to this matter should be addressed as follows:

By mail: Director for Patents
PO Box 1450
Alexandria, VA 22313-1450

By FAX: (571) 273-8300
Attn: Office of Petitions

By hand: Customer Service Window
Randolph Building
401 Dulany Street
Alexandria, VA 22314

Inquiries regarding the Amendment should be directed to the Examiner. Telephone inquiries concerning this petition Decision should be directed to the undersigned at (571) 272-3232.

/Derek L. Woods/
Derek L. Woods
Attorney
Office of Petitions

CC: LAW OFFICE OF BRIAN J. DAUITO
886 ILIMA COURT
PALO ALTO, CA 94306

UNITED STATES PATENT AND TRADEMARK OFFICE

Commissioner for Patents
United States Patent and Trademark Office
P.O. Box 1450
Alexandria, VA 22313-1450
www.uspto.gov

Hologic Patent Department
attn: Darry Pattinson
Sr. IP Paralegal
250 Campus Drive
Marlborough MA 01752

COPY MAILED

JAN 29 2009

OFFICE OF PETITIONS

| | | |
|---|---|---|
| In re Application of | : | |
| Snoeren et al. | : | |
| Application No. 10/623191 | : | |
| Filing or 371(c) Date: 07/18/2003 | : | ON PETITION |
| Attorney Docket Number: | : | |
| 19.033011 (R-232) | : | |

This is a decision on the request for reconsideration of petition under 37 CFR 1.137(b), filed November 28, 2008, to revive the above-identified application.

The application became abandoned for failure to timely file a reply within the meaning of 37 CFR 1.113 to the final Office action of December 17, 2007. The proposed reply required for consideration of a petition to revive must be a Notice of Appeal (and appeal fee required by 37 CFR 41.20(b)(2), an amendment that *prima facie* places the application in condition for allowance, a Request for Continued Examination and submission (37 CFR 1.114), or the filing of a continuing application under 37 CFR 1.53(b). See MPEP 711.03(c)(III)(A)(2). No extensions of time pursuant to the provisions of 37 CFR 1.136(a) were obtained. Accordingly, the date of abandonment of this application is March 18, 2008.

A petition to revive the application under 37 CFR 1.137(b), filed July 21, 2008, was dismissed in a Decision mailed November 6, 2008, for failing to meet the requirements of a grantable petition under 37 CFR 1.137(b).

The petition satisfies the requirements of 37 CFR 1.137(b) in that petitioner has supplied (1) the reply in the form of a Request for Continued Examination (RCE) and fee, and the submission required by 37 CFR 1.114; (2) the petition fee (filed with the original petition on April 17, 2007); and (3) a proper statement of unintentional delay (filed with the original petition on April 17, 2007) [1].

[1] 37 CFR 1.137(b)(3) requires a statement that "the entire delay in filing the required reply from the due date for the reply until the filing of a grantable petition pursuant to 37 CFR 1.137(b) was unintentional." Since the statement appears in the original petition filed July 21, 2008, and the present petition requests reconsideration of the original petition, the renewed petition is being construed as incorporating the required statement of unintentional delay. Petitioner must notify the Office if this is **not** a correct reading of the statement appearing in the petition.

This application is being referred to Technology Center AU 2624 for processing of the RCE and for appropriate action by the Examiner in the normal course of business on the amendment submitted in accordance with 37 CFR 1.114.

Telephone inquiries concerning this decision should be directed to the undersigned at (571) 272-3232.

/Derek L. Woods/
Derek L. Woods
Attorney
Office of Petitions

CC: LAW OFFICE OF BRIAN J. DAUITO
886 ILIMA COURT
PALO ALTO, CA 94306

UNITED STATES PATENT AND TRADEMARK OFFICE

UNITED STATES DEPARTMENT OF COMMERCE
United States Patent and Trademark Office
Address: COMMISSIONER FOR PATENTS
P.O. Box 1450
Alexandria, Virginia 22313-1450
www.uspto.gov

KLARQUIST SPARKMAN LLP
121 S.W. SALMON STREET
SUITE 1600
PORTLAND, OR 97204

Mail Date: 04/21/2010

| | | |
|---|---|---|
| **Applicant** | : Ming-Chieh Lee | : DECISION ON REQUEST FOR |
| **Patent Number** | : 7602851 | : RECALCULATION of PATENT |
| **Issue Date** | : 10/13/2009 | : TERM ADJUSTMENT IN VIEW |
| **Appliction No** | : 10/623,195 | : OF WYETH AND NOTICE OF INTENT TO |
| **Filed** | : 07/18/2003 | : ISSUE CERTIFICATE OF CORRECTION |
| | | : |

The Request for Recalculation is **GRANTED** to the extent indicated.

The patent term adjustment has been determined to be **895** days. The USPTO will *sua sponte* issue a certificate of correction reflecting the amount of PTA days determined by the recalculation.

Prior to the issuance of the certificate of correction, the USPTO will afford patentee an opportunity to be heard and request reconsideration. Accordingly, patentee has **one month or thirty (30) days**, whichever is longer, to file a request for reconsideration of this patent term adjustment calculation. See 35 U.S.C. 154(b)(3)(B)(ii) and 37 CFR 1.322(a)(4). No extensions of time will be granted under 37 CFR 1.136.

Patentee should use document code PET.OP if electronically filing a request for reconsideration of this patent term adjustment calculation. The patentee must also include the information required by 37 CFR 1.705(b)(2) and the fee required by 37 CFR 1.18(e). If patentee does not file a timely request for reconsideration of this patent term adjustment calculation including the information required by 37 CFR 1.705(b)(2) and the fee required by 37 CFR 1.18(e), the USPTO will issue a certificate of correction reflecting the PTA determination noted above.

Patentee should be aware that in order to preserve the right to review in the United States District Court for the District of Columbia of the USPTO patent term adjustment determination, patentee must ensure that he or she also take the steps required under 35 U.S.C. 154(b)(4)(A) in a timely manner. Nothing in the request for recalculation should be construed as providing an alternative time frame for commencing a civil action under 35 U.S.C. 154(b)(4)(A).

Any questions concerning this decision should be directed to the Office of Patent Legal Administration at 571-272-7702.

UNITED STATES PATENT AND TRADEMARK OFFICE

Commissioner for Patents
United States Patent and Trademark Office
P.O. Box 1450
Alexandria, VA 22313-1450
www.uspto.gov

INTELLECTUAL PROPERTY / TECHNOLOGY LAW
PO BOX 14329
RESEARCH TRIANGLE PARK, NC 27709

COPY MAILED
FEB 28 2006
OFFICE OF PETITIONS

In re Application of :
Bruce Baretz et al :
Application No. 10/623,198 : ON PETITION
Filed: July 18, 2003 :
Attorney Docket No. ATMI-198-CON

This is a decision on the petition, filed February 27, 2006 under 37 CFR 1.313(c)(2) to withdraw the above-identified application from issue after payment of the issue fee.

The petition is **GRANTED**.

The above-identified application is withdrawn from issue for consideration of a submission under 37 CFR 1.114 (request for continued examination). See 37 CFR 1.313(c)(2).

**Petitioner is advised that the issue fee paid on September 2, 2005 in the above-identified application cannot be refunded. If, however, the above-identified application is again allowed, petitioner may request that it be applied towards the issue fee required by the new Notice of Allowance.**[1]

Telephone inquiries should be directed to Irvin Dingle at (571) 272-3210.

This matter is being referred to Technology Center AU 2814 for processing of the request for continued examination under 37 CFR 1.114 and for consideration of the concurrently filed Information Disclosure Statement.

Irvin Dingle
Petitions Examiner
Office of Petitions

---

[1] The request to apply the issue fee to the new Notice may be satisfied by completing and returning the new Issue Fee Transmittal Form PTOL-85(b), which includes the following language thereon: Commissioner for Patents is requested to apply the Issue Fee and Publication Fee (if any) or re-apply any previously paid issue fee to the application identified above. Petitioner is advised that, whether a fee is indicated as being due or not, the Issue Fee Transmittal Form **must** be completed and timely submitted to avoid abandonment. Note the language in bold text on the first page of the Notice of Allowance and Fee(s) Due (PTOL-85).

UNITED STATES PATENT AND TRADEMARK OFFICE

UNITED STATES DEPARTMENT OF COMMERCE
United States Patent and Trademark Office
Address: COMMISSIONER FOR PATENTS
P.O. Box 1450
Alexandria, Virginia 22313-1450
www.uspto.gov

PHILIP S. JOHNSON
JOHNSON & JOHNSON
ONE JOHNSON & JOHNSON PLAZA
NEW BRUNSWICK, NJ 08933-7003

Mail Date: 04/23/2010

| | | |
|---|---|---|
| **Applicant** | : Rickey D. Hart | : DECISION ON REQUEST FOR |
| **Patent Number** | : 7637949 | : RECALCULATION of PATENT |
| **Issue Date** | : 12/29/2009 | : TERM ADJUSTMENT IN VIEW |
| **Application No** | : 10/623,212 | : OF WYETH AND NOTICE OF INTENT TO |
| **Filed** | : 07/18/2003 | : ISSUE CERTIFICATE OF CORRECTION |
| | | : |

The Request for Recalculation is **GRANTED** to the extent indicated.

The patent term adjustment has been determined to be **628** days. The USPTO will *sua sponte* issue a certificate of correction reflecting the amount of PTA days determined by the recalculation.

Prior to the issuance of the certificate of correction, the USPTO will afford patentee an opportunity to be heard and request reconsideration. Accordingly, patentee has **one month or thirty (30) days**, whichever is longer, to file a request for reconsideration of this patent term adjustment calculation. See 35 U.S.C. 154(b)(3)(B)(ii) and 37 CFR 1.322(a)(4). No extensions of time will be granted under 37 CFR 1.136.

Patentee should use document code PET.OP if electronically filing a request for reconsideration of this patent term adjustment calculation. The patentee must also include the information required by 37 CFR 1.705(b)(2) and the fee required by 37 CFR 1.18(e). If patentee does not file a timely request for reconsideration of this patent term adjustment calculation including the information required by 37 CFR 1.705(b)(2) and the fee required by 37 CFR 1.18(e), the USPTO will issue a certificate of correction reflecting the PTA determination noted above.

Patentee should be aware that in order to preserve the right to review in the United States District Court for the District of Columbia of the USPTO patent term adjustment determination, patentee must ensure that he or she also take the steps required under 35 U.S.C. 154(b)(4)(A) in a timely manner. Nothing in the request for recalculation should be construed as providing an alternative time frame for commencing a civil action under 35 U.S.C. 154(b)(4)(A).

Any questions concerning this decision should be directed to the Office of Patent Legal Administration at 571-272-7702.

UNITED STATES PATENT AND TRADEMARK OFFICE

COMMISSIONER FOR PATENTS
UNITED STATES PATENT AND TRADEMARK OFFICE
P.O. BOX 1450
ALEXANDRIA, VA 22313-1450
www.uspto.gov

MICHELLE L. EVANS
GUNN, LEE & HANOR
700 N. ST. MARY'S STREET
SUITE 1500
SAN ANTONIO TX 78205

COPY MAILED

APR 21 2004

OFFICE OF PETITIONS

| | |
|---|---|
| In re Application of<br>Gramling<br>Application No. 10/623,222<br>Deposited: July 21, 2003<br>Attorney Docket No. P-7988<br>For: GUTTER RETAINING SYSTEM | DECISION DISMISSING<br>PETITION |

This is a decision on the petition, filed December 19, 2003 (Express Mail date December 18, 2003), requesting that the above-identified application be accorded a filing date of July 21, 2003. The petition will be treated under 37 CFR 1.53(e).

The petition inder 37 CFR 1.53(e) is **DISMISSED**. Any further reconsideration must be submitted within TWO (2) MONTHS from the mail date of this decision. Extensions of time under 37 CFR 1.136(a) are permitted.

The application was deposited on July 21, 2003. On December 8, 2003, the Office of Initial Patent Examination mailed a " Notice of Incomplete Nonprovisional Application" (Notice) informing petitioner that drawings of applicant's invention were missing and that the filing date of the application would be the date drawings were submitted.

In response to the Notice, petitioner timely filed the present petition. Petitioner requests that Office accord a July 21, 2003 filing date to the application on the basis that the allegedly omitted drawings were received in the Patent and Trademark Office (PTO) on July 21, 2003.

Unfortunately, petitioner has not submitted the $130.00 petition fee required by the December 8, 2003 Notice, or any evidence, such as an itemized date stamped return receipt postcard, that proves the omitted drawings were received in the Office on July 21, 2003.

Therefore, the petition is dismissed.

Petitioner is encouraged to submit the $130.00 petition fee and evidence that the Office received the omitted drawings on July 21, 2003. Petitioner may request a refund of the $130.00 petition fee, if it is determined that the omitted drawings were indeed filed on July 21, 2003.

If petitioner is unable to prove the drawings were filed on July 21, 2003, petitioner should submit a newly executed oath or declaration covering the omitted drawings. If petitioner selects this option, the filing date of the application will be the date that the omitted drawings are received in the Office.

Further correspondence with respect to this matter should be addressed as follows:

**By mail:** Mail Stop PETITION
Commissioner for Patents
Post Office Box 1450
Alexandria, VA 22313-1450
ATTN: E. Shirene Willis

**By hand:** Crystal Plaza 1 Lobby
2011 South Clark Place
Room 1B03
Arlington, VA 22202
ATTN: E. Shirene Willis

**By FAX:** (703) 872-9306
ATTN: Office of Petitions -- E. Shirene Willis

Any inquiries pertaining to this matter may be directed to the undersigned at (703) 308-6712.

E Shirene Willis

E. Shirene Willis
Senior Petitions Attorney
Office of Petitions

UNITED STATES PATENT AND TRADEMARK OFFICE

Commissioner for Patents
United States Patent and Trademark Office
P.O. Box 1450
Alexandria, VA 22313-1450
www.uspto.gov

MICHELLE L. EVANS
GUNN, LEE & HANOR
700 N. ST. MARY'S STREET
SUITE 1500
SAN ANTONIO TX 78205

COPY MAILED
JUN 2 9 2004
OFFICE OF PETITIONS

| | |
|---|---|
| In re Application of<br>Gramling<br>Application No. 10/623,222<br>Filed: July 21, 2003<br>Attorney Docket No. P-7988<br>For: GUTTER RETAINING SYSTEM | DECISION GRANTING<br>PETITION |

This is a decision on the reconsideration petition under 37 CFR 1.53(e), filed May 28, 2004, requesting that the above-identified application be accorded a filing date of July 21, 2003.

The application was deposited on July 21, 2003. On December 8, 2003, the Office of Initial Patent Examination mailed a " Notice of Incomplete Nonprovisional Application" (Notice) informing petitioner that drawings of applicant's invention were missing and that the filing date of the application would be the date drawings were submitted.

In response to the Notice, petitioner timely filed a petition on December 19, 2003 (Express Mail date December 18, 2003). Petitioner requested that Office accord a July 21, 2003 filing date to the application on the basis that the allegedly omitted drawings were received in the Patent and Trademark Office (PTO) on July 21, 2003.

Unfortunately, petitioner did not submit any evidence, such as an itemized date stamped return receipt postcard, that proves the omitted drawings were received in the Office on July 21, 2003. Therefore, the petition was dismissed.

The present reconsideration petition is accompanied by a copy of applicant's itemized postcard receipt showing an Office of Initial Patent Examination date stamp citing July 21, 2003 as the date of receipt. The postcard lists, *inter alia*, that the filing includes 3 pages of drawings.

The return postcard constitutes *prima facie* evidence that 3 pages of drawings were filed on July 21, 2003. MPEP 503. Accordingly, the request is granted. No petition fee has been or will be charged in connection with this matter.

The application is being returned to Office of Initial Patent Examination for further processing,

Best Available Copy

with a filing date of **July 21, 2003**, using the copy of the 3 pages of drawings submitted with the instant petition. Office records will be corrected to show that 3 pages of drawings were present on filing.

Any inquiries pertaining to this matter may be directed to the undersigned at (703) 308-6712.

E Shirene Willis

E. Shirene Willis
Senior Petitions Attorney
Office of Petitions

Best Available Copy

UNITED STATES PATENT AND TRADEMARK OFFICE

Commissioner for Patents
United States Patent and Trademark Office
P.O. Box 1450
Alexandria, VA 22313-1450
www.uspto.gov

MEDTRONIC VASCULAR, INC.
IP LEGAL DEPARTMENT
3576 UNOCAL PLACE
SANTA ROSA CA 95403

**COPY MAILED**

MAR 2 3 2007

**OFFICE OF PETITIONS**

| | | |
|---|---|---|
| In re Application of | : | |
| Fitzhugh et al. | : | DECISION ON PETITION |
| Application No. 10/623,239 | : | |
| Filed: 07-17-2003 | : | |
| Attorney Docket No. PA497 DIV1 | : | |

This is in response to the petition under 37 CFR 1.47(a), filed July 17, 2003.

In accordance with 37 CFR 1.63(d)(3), applicants have submitted a copy of the executed declaration submitted in Application No. 09/972,219, filed October 4, 2001, of which the present filing is a divisional application. The petition was not accompanied by a copy of the decision granting the petition under 37 CFR 1.47(a) in the prior application. However, in order to expedite processing of this application, a copy of the decision mailed on October 4, 2002, granting Rule 1.47(a) status in the prior application has been made and placed in the present application.

As Rule 1.47(a) status was granted in the prior application, this application is hereby accorded Rule 1.47(a) status. As no petition is necessary to accord Rule 1.47(a) status in this application, the petition is **dismissed as moot.** No petition fee is necessary.

Pursuant to 37 CFR 1.47(c), the Office is dispensing with the notice provision in the present application because notice was provided after the grant of Rule 1.47(a) status in the prior application.

The matter is being referred to the Office of Patent Publications for issuance of a patent.

Telephone inquiries regarding this decision should be directed to the undersigned at (571) 272-3211.

Christina Tartera Donnell

Christina Tartera Donnell
Senior Petitions Attorney
Office of Petitions

UNITED STATES PATENT AND TRADEMARK OFFICE

COMMISSIONER FOR PATENT
UNITED STATES PATENT AND TRADEMARK OFFIC
WASHINGTON, D.C. 20231
www.uspto.go

Paper No. 8

CHRISTINE ACEVES
MEDTRONIC AVE
3576 UNOCAL PLACE
SANTA ROSA, CA 95403

COPY MAILED

OCT 0 4 2002

OFFICE OF PETITIONS

In re Application of
Anthony L. Fitzhugh et al
Application No. 09/972,219
Filed: October 4, 2001
For: HIGHLY CROSS-LINKED, EXTREMELY HYDROPHOBIC NITRIC OXIDE-RELEASING POLYMERS AND METHODS FOR THEIR MANUFACTURE AND USE

: DECISION GRANTING
:STATUS UNDER 37 CFR 1.47(a)

This is in response to the petition under 37 CFR 1.47(a), filed July 16, 2002.

The petition is granted.

Petitioner has shown that the non-signing inventor has refused to join in the filing of the above-identified application.

The above-identified application and papers have been reviewed and found in compliance with 37 CFR 1.47(a). This application is hereby accorded Rule 1.47(a) status. As provided in Rule 1.47(c), this Office will forward notice of this application's filing to the non-signing inventor at the address given in the petition. Notice of the filing of this application will also be published in the Official Gazette.

Telephone inquiries regarding this decision should be directed to Irvin Dingle at (703) 306-5684.

This application is being forwarded to Technology Center 1600.

Frances Hicks

Frances Hicks
Lead Petitions Examiner
Office of Petitions
Office of the Deputy Commissioner
for Patent Examination Policy

UNITED STATES PATENT AND TRADEMARK OFFICE

COMMISSIONER FOR PATENT
UNITED STATES PATENT AND TRADEMARK OFFIC
WASHINGTON, D.C. 2023
www.uspto.go

ANTHONY L. FITZHUGH, M.D.
2117 INDEPENDENCE ST.
FREDERICK, MD 21702

COPY MAILED

OCT 0 4 2002

OFFICE OF PETITIONS

In re Application of
Anthony L. Fitzhugh; Robert Cafferata; Larry K. Keefer
Application No. 09/972,219
Filed: October 4, 2001
For: HIGHLY CROSS-LINKED, EXTREMELY HYDROPHOBIC NITRIC OXIDE-RELEASING POLYMERS AND METHODS FOR THEIR MANUFACTURE AND USE

Dear Mr. Fitzhugh:

You are named as a joint inventor in the above identified United States patent application, filed under the provisions of 35 U.S.C. 116 (United States Code), and 37 CFR 1.47(a), Rules of Practice in Patent Cases. Should a patent be granted on the application you will be designated therein as a joint inventor.

As a named inventor you are entitled to inspect any paper in the file wrapper of the application, order copies of all or any part thereof (at a prepaid cost per 37 CFR 1.19) or make your position of record in the application. Alternatively, you may arrange to do any of the preceding through a registered patent attorney or agent presenting written authorization from you. If you care to join in the application, counsel of record (see below) would presumably assist you. Joining in the application would entail the filing of an appropriate oath or declaration by you pursuant to 37 CFR 1.63.

Telephone inquiries regarding this communication should be directed to the Irvin Dingle at (703) 306-5684. Requests for information regarding your application should be directed to the File Information Unit at (703) 308-2733. Information regarding how to pay for and order a copy of the application, or a specific paper in the application, should be directed to Certification Division at (703) 308-9726 or 1 (800) 972-6382 (outside the Washington D.C. area).

Frances Hicks

Frances Hicks
Lead Petitions Examiner
Office of Petitions
Office of the Deputy Commissioner
for Patent Examination Policy

cc:

Christine Aceves
Medtronic Ave
3576 Unocal Place
Santa Rosa, CA 95403

UNITED STATES PATENT AND TRADEMARK OFFICE

OFFICE

NORRIS, MCLAUGHLIN & MARCUS, PA
875 THIRD AVENUE
18TH FLOOR
NEW YORK NY 10022

JUN 30 2008

| | | |
|---|---|---|
| In re Application of | : | |
| HORN, JURGEN, | : | **DECISION ON PETITION** |
| Application No. 10/623, 241 | : | |
| Filed: July 18, 2003 | : | |
| Attorney Docket No. 100723-14 | : | |

This is a decision on the Petition To Withdraw Holding of Abandonment (CFR 1.181), received in the United States Patent and Trademark Office (USPTO) on June 24, 2008.

The petition is **DISMISSED.** Any request for reconsideration of this decision, or as explained below, filing a petition seeking revival under 37 CFR § 1.137, must be filed within TWO MONTHS (2) from the mail date of this decision.

The application was held abandoned for failure to timely pay the issue fee as required in the Notice Of Allowance and Fee(s) Due, mailed February 14, 2008, which set a three (3) month statutory period for reply. A Notice of Abandonment was mailed June 9, 2008.

The Office acknowledges the timely receipt of Part B – Fee(s) Transmittal (Transmittal) on March 22, 2008, as evidenced by the "Office Date" stamp thereon. However, without the inclusion of the Deposit Account Number on the form there was no authorization to charge the required fees.

As an additional aid to applicants, the rule as proposed has been amended to include §§ 1.311(b)(1) and (b)(2) that can act as safety mechanisms. Where it is clear that an applicant actually intends to pay the issue fee and publication fee (if required) such as by submitting an incorrect issue fee or publication fee, or a fee transmittal form (or letter) for payment of the fees, a request to charge the correct issue fee or any publication fee due to any deposit account identified in a previously filed authorization to charge **such** fees, will be allowed to act a payment of the correct issue fee.

Petitioner should review the amended rules pertaining to general authorization to pay fees. See 65 FR 54647 September 8, 2000, revised 69 FR 56481 September 21, 2004, effective September 21, 2004.

Unfortunately, the application file does not reveal a previously filed authorization to charge **such** fee(s) or specifically the issue fee.

## Add that the applicant will be sent to the Office of Petitions to consider the 1.137 petition.

Further correspondence with respect to filing the petition under 37 CFR 1.137 should be directed to the Office of Petitions at 571-272-3282 or addressed as follows:

*By mail:* Mail Stop Petitions
Commissioner for Patents
Office of Petitions
P O Box 1450
Alexandria, VA 22313-1450

Telephone inquires concerning this decision be directed to the undersigned in the Office of Patent Publication at 703-305-9250 x 175.

Kay D. Pinkney
Application Assistance Unit
Office of Data Management

UNITED STATES PATENT AND TRADEMARK OFFICE

Commissioner for Patents
United States Patent and Trademark Office
P.O. Box 1450
Alexandria, VA 22313-1450
www.uspto.gov

COPY MAILED

OCT 13 2009

OFFICE OF PETITIONS

**NORRIS, MCLAUGHLIN & MARCUS, PA**
**875 THIRD AVENUE**
**18TH FLOOR**
**NEW YORK NY 10022**

| | | |
|---|---|---|
| In re Application of | : | |
| Jurgen HORN | : | |
| Application No. 10/623,241 | : | DECISION ON PETITION |
| Filed: July 18, 2003 | : | |
| Attorney Docket No. 100723-14 / BEIL WOLFF 29 | : | |

This is a decision on the petition under the unintentional provisions of 37 CFR 1.137(b), filed July 10, 2008 to revive the above-identified application.

The petition is **GRANTED**.

This application became abandoned for failure to timely pay the issue and publication fees on or before May 14, 2008, as required by the Notice of Allowance and Fee(s) Due, February 14, 2008, which set a statutory period for reply of three (3) months. Accordingly, the application became abandoned on May 15, 2008.

The petition satisfies the requirements of 37 CFR 1.137(b) in that petitioner has supplied (1) the reply in the form of payment of the issue fee of $1,440.00 and publication fee of $300.00; (2) the petition fee of $1,540.00; and (3) a proper statement of unintentional delay. Accordingly, the issue and publication fee payments are accepted as being unintentionally delayed.

It is not apparent whether the person signing the statement of unintentional delay was in a position to have firsthand or direct knowledge of the facts and circumstances of the delay at issue. Nevertheless, such statement is being treated as having been made as the result of a reasonable inquiry into the facts and circumstances of such delay. See 37 CFR 10.18(b) and Changes to Patent Practice and Procedure; Final Rule Notice, 62 Fed. Reg. 53131, 53178 (October 10, 1997), 1203 Off. Gaz. Pat. Office 63, 103 (October 21, 1997). In the event that such an inquiry has not been made, petitioner must make such an inquiry. If such inquiry results in the discovery that it is not correct that the entire delay in filing the required reply from the due

date for the reply until the filing of a grantable petition pursuant to 37 CFR 1.137(b) was unintentional, petitioner must notify the Office.

Telephone inquiries concerning this decision should be directed to Michelle R. Eason at (571) 272-4231.

This application is being referred to Office of Data Management.

Michelle R. Eason
Paralegal Specialist
Office of Petitions

UNITED STATES PATENT AND TRADEMARK OFFICE

Commissioner for Patents
United States Patent and Trademark Office
P.O. Box 1450
Alexandria, VA 22313-1450
www.uspto.gov

JAN 11 2005

MAILED

JAN 11 2005

OFFICE OF THE DIRECTOR
TC 3600

Lanny R. Lee
5090 N. Harbor City Blvd.
Melbourn, FL 32940

In re application of
Lanny R. Lee
Application No. 10/623,260
Filed: July 19, 2003
For: PERSONAL FLOTATION DEVICE

**DECISION ON PETITION TO MAKE SPECIAL (APPLICANT'S AGE)**

This is a decision on the petition submitted on October 7, 2004 under 37 CFR 1.102 (c) to make the above-identified application special under the accelerated examination procedure set forth in MPEP 708.02, Section IV: Applicant's Age.

The petition is **GRANTED**.

An application may be accorded special status upon the filing of a petition providing evidence showing that the applicant is at least 65 years old. Such a showing may be provided by evidence such as a birth certificate or a statement from the applicant.

The evidence submitted with the petition is a drivers license for Lanny R. Lee indicating that he is at least 65 years of age.

The examiner is directed (1) to make an interference search for possible interfering applications, (2) to promptly examine this application out of turn, and (3) if any interfering application is discovered, to examine such application simultaneously and state in the first official letter of such application that it is being taken out of turn because of a possible interference.

Petitioner is advised that this application will continue to be special, throughout its entire prosecution and pendency, including interference or appeal, if any, only if petitioner makes a prompt ***bona fide*** effort, in response to each Office action, to place the application in condition for allowance, even if it is necessary to conduct an interview with the examiner to accomplish this purpose.

**SUMMARY**: Petition to Make Special **GRANTED**.

Randolph A. Reese
Special Programs Examiner
Technology Center 3600
(703) 308-2121

RAR/dcg: 11/24/04

UNITED STATES PATENT AND TRADEMARK OFFICE

COMMISSIONER FOR PATENTS
UNITED STATES PATENT AND TRADEMARK OFFICE
P.O. BOX 1450
ALEXANDRIA, VA 22313-1450
www.uspto.gov

Allison Johnson, P.A.
2925 Dean Parkway
Suite 300
Minneapolis, MN 55416

COPY MAILED

AUG 2 5 2005

OFFICE OF PETITIONS

In re Application of
Anne E. Spinks
Application No. 10/623,278
Filed: July 18, 2003
Attorney Docket No. 99-113-US-02

DECISION ON PETITION
UNDER 37 CFR 1.78(a)(3)

This is a decision on the petition under 37 CFR 1.78(a)(3), filed January 18, 2005, to accept an unintentionally delayed claim under 35 U.S.C. § 120 for the benefit of priority to the prior-filed nonprovisional application set forth in the amendment filed with the petition.

The petition is **GRANTED**.

A petition for acceptance of a claim for late priority under 37 CFR 1.78(a)(3) is only applicable to those applications filed on or after November 29, 2000. Further, the petition is appropriate only after the expiration of the period specified in 37 CFR 1.78(a)(2)(ii). In addition, the petition under 37 CFR 1.78(a)(3) must be accompanied by:

**(1)** the reference required by 35 U.S.C. § 120 and 37 CFR 1.78(a)(2)(i) of the prior-filed application, unless previously submitted;
**(2)** the surcharge set forth in § 1.17(t); and
**(3)** a statement that the entire delay between the date the claim was due under 37 CFR 1.78(a)(2)(ii) and the date the claim was filed was unintentional. The Commissioner may require additional information where there is a question whether the delay was unintentional.

All the above requirements having been satisfied, the late claim for priority under 35 U.S.C. § 120 is accepted as being unintentionally delayed.

***The granting of the petition to accept the delayed benefit claim to the prior-filed application under 37 CFR 1.78(a)(3) should not be construed as meaning that this application is entitled to the benefit of the prior-filed application. In order for this application to be entitled to the benefit of the prior-filed application, all other requirements under 35 U.S.C. § 120 and 37 CFR 1.78(a)(1) and (a)(2) must be met. Similarly, the fact that the corrected Filing Receipt***

***accompanying this decision on petition includes the prior-filed application should not be construed as meaning that applicant is entitled to the claim for benefit of priority to the prior-filed application noted thereon. Accordingly, the examiner will, in due course, consider this benefit claim and determine whether the application is entitled to the benefit of the earlier filing date.***

Any inquiries concerning this decision may be directed to Marianne Jenkins at (571) 272-3223. All other inquiries concerning either the examination procedures or status of the application should be directed to the Technology Center.

This matter is being referred to Technology Center Art Unit 1772 for appropriate action on the amendment filed January 18, 2005, including consideration by the examiner of applicant's entitlement to claim benefit of priority under 35 U.S.C. § 120 to the prior-filed application.

Frances Hicks

Frances M. Hicks
Lead Petitions Examiner
Office of Petitions

UNITED STATES PATENT AND TRADEMARK OFFICE

Commissioner for Patents
United States Patent and Trademark Office
P.O. Box 1450
Alexandria, VA 22313-1450
www.uspto.gov
DIW Jun-06

KIRSTEN K. STONE, DIRECTOR OF PATENTS & TECHNOLOGY
H.B. FULLER COMPANY, PATENT DEPARTMENT
1200 WILLOW LAKE BLVD.
P.O. BOX 64683
ST. PAUL MN 55164-0683

COPY MAILED
JUN 0 5 2006
OFFICE OF PETITIONS

| | | |
|---|---|---|
| In re Application of | : | |
| Anne E. Spinks | : | |
| Application No. 10/623,278 | : | ON PETITION |
| Filed: 18 July, 2003 | : | |
| Atty Docket No. 99-113-US-02 | : | |

This is a decision on the petition filed under 37 CFR 1.137(a) on 31 March, 2006, which is treated as a petition to withdraw the holding of abandonment of the above-identified application.

The petition is **GRANTED**.

The application was held abandoned on 10 December, 2005, for failure to timely respond to the non-final Office action mailed on 9 September, 2005, which set a three (3) month shortened statutory period for reply. Notice of Abandonment was mailed on 20 March, 2006.

Petitioner asserts that the Office action mailed on 9 September, 2005, was never received. Specifically, petitioner asserts that the Office action mailed on 9 September, 2005, was not mailed to the correct address.

In the absence of any irregularity in the mailing, there is a strong presumption that the Office action was properly mailed to the address of record.

A review of the record reveals that the correspondence address appears to have been changed in error after applicant filed a Power of Attorney and Change of Correspondence Address Indication Form on 14 February, 2005. The form indicates a revocation and appointment of attorneys, but does not request a change in the correspondence address. Nevertheless, a different address was provided on the cover sheet accompanying said form, and the correspondence address was inadvertently changed to reflect the

address provided on the cover letter. As such, the showing of record is that petitioners did not intend to change the correspondence address.

Additionally, a review of the official file reveals that the Office action mailed on 9 September, 2005, was returned as undeliverable on 19 September, 2005.

As such, the showing of record is that there was an irregularity in the mailing of the Office action mailed on 9 September, 2005, and that due to said irregularity, the Office action mailed on 9 September, 2005, was not received.

As such, the showing of record is that the Office action was not mailed to the current correspondence address.

Accordingly, the holding of abandonment is withdrawn, and the Notice of Abandonment mailed on 20 March, 2006, is vacated.

The correspondence address has now been changed in Office records.

As the holding of abandonment has been withdrawn, the petition under 37 CFR 1.137(a) is unnecessary and will be dismissed as moot. The petition fee will be credited to counsel's deposit account.

As petitioner filed on 5 May, 2006, amendment in response to the Office action mailed on 9 September, 2005, the amendment filed with the present petition will be accepted as timely filed.

The file is being referred to Technology Center Art Unit 1772 for consideration of the amendment filed on 5 May, 2006.

Telephone inquiries regarding this decision may be directed to the undersigned at 571-272-3231.

DWood

Douglas I. Wood
Senior Petitions Attorney
Office of Petitions

UNITED STATES PATENT AND TRADEMARK OFFICE

COMMISSIONER FOR PATENTS
UNITED STATES PATENT AND TRADEMARK OFFICE
P.O. BOX 1450
ALEXANDRIA, VA 22313-1450
www.uspto.gov

ALLEN, DYER, DOPPELT, MILBRATH & GILCHRIST, PA
P.O. BOX 3791
ORLANDO, FL 32802-3791

COPY MAILED

APR 1 5 2004

OFFICE OF PETITIONS

In re Application of
Haischmann, Merzhauser, Stiller, and Reuther
Application No. 10/623,279
Filed: July 18, 2003
Attorney Docket No. 0090096
For: DEVICE FOR RINSING A BODY CAVITY

: DECISION REFUSING STATUS
: UNDER 37 CFR 1.47(a)

This is a decision on the petition under 37 CFR 1.47(a) filed February 23, 2004 (certificate of mailing dated February 18, 2004).

The petition under 37 CFR 1.47(a) is **dismissed.**

Any request for reconsideration under this decision must be submitted within TWO (2) MONTHS from the mail date of this decision. Extensions of time under 37 CFR 1.136(a) are permitted. Failure to respond will result in the abandonment of this application. Any response should be titled "Request for Reconsideration of Petition Under 37 CFR 1.47(a).

The above-identified application was filed on July 18, 2003, without a proper oath or declaration or the filing fee. Accordingly, a "Notice to File Missing Parts of Nonprovisional Application" was mailed on November 18, 2003, requiring an executed oath or declaration and a surcharge for the late filing of the oath or declaration, and a filing fee. The instant petition and exhibits were filed on February 23, 2004, along with a request for an extension of time within the first month.

A grantable petition under 37 CFR 1.47(a) requires:

(1) proof that the non-signing inventor(s) cannot be reached or refuses to sign the oath or declaration after having been presented with the application papers (specification, claims, and drawings);

(2) an acceptable oath or declaration in compliance with 35 U.S.C. §§ 115 and 116;

(3) the petition fee,

(4) a statement of the last known address of the non-signing inventor,

The instant petition lacks items (1) and (4) as set forth above.

As to item (4), the last known address for inventor Haischmann was not provided. Petitioner must provide the last known address for each non-signing inventor even if that address is probably not correct.

The Office must be able to make an attempt to inform the non-signing inventors that the application has been accorded status under 37 CFR 1.47.

As to item (1), it is noted that petitioner maintains that inventor Haischmann has refused to join the prosecution of the application, however; when such a refusal is alleged, petitioner must provide details regarding the same. Section 409.03(d) of the *Manual of Patent Examining Procedure* (MPEP) provides, in pertinent part, that:

> [w]here a refusal of the inventor to sign the application papers is alleged, the circumstances of the presentation of the application papers and of the refusal must be specified in a statement of facts by the person who presented the inventor with the application papers and/or to whom the refusal was made. Statements made by a party not present when an oral refusal is made will not be accepted.
>
> When it is concluded . . . that a non-signing inventor's conduct constitutes a refusal, all facts upon which that conclusion is based should be stated in the statement of facts in support of the petition or directly in the petition. If there is documentary evidence to support facts alleged in the petition or in any statement of facts, such evidence should be submitted.

The declaration of Marc Engelhardt merely states that inventor Haischmann has refused to execute the declaration, but does not provide any details as to the alleged refusal as is required by Section 409.03(d) of the MPEP. Any renewed petition file must provide a first-hand account of inventor Haischmann's alleged refusal to join the prosecution of the application.

Please further note that an evidentiary documents originally written in German must be accompanied by an English translation of the same so that the undersigned can read it.

Deposit account 01-0484 will be charged $130.00 for the instant petition fee.

Further correspondence with respect to this matter should be addressed as follows:

By mail: Mail Stop Petitions
Commissioner for Patents,
PO Box 1450
Alexandria, VA 22313-1450

By FAX: (703) 872-9306
Attn: Office of Petitions

Telephone inquiries should be directed to the undersigned (703) 305-0010.

Kenya A. McLaughlin

Kenya A. McLaughlin
Petitions Attorney
Office of Petitions

UNITED STATES PATENT AND TRADEMARK OFFICE

Commissioner for Patents
United States Patent and Trademark Office
P.O. Box 1450
Alexandria, VA 22313-1450
www.uspto.gov

ALLEN, DYER, DOPPELT, MILBRATH & GILCHRIST, PA
P.O. BOX 3791
ORLANDO, FL 32802-3791

COPY MAILED
JUL 1 6 2004
OFFICE OF PETITIONS

In re Application of :
Haischmann, Merzhauser, Stiller, and Reuther :
Application No.: 10/623,279 : DECISION NOTING JOINDER
Filed: July 18, 2003 :
Attorney Docket No: 0090096 :
FOR: DEVICE FOR RINSING A BODY CAVITY

This is in response to the renewed petition filed June 18, 2004 (certificate of mailing dated June 15 2004), noting the joinder of inventor Haischmann in the above-cited application.

In view of the joinder of the inventor, further consideration under 37 CFR 1.47(a) is not necessary. This application does not have any Rule 1.47(a) status and no such status should appear on the file wrapper. This application need not be returned to this Office for further consideration under 37 CFR 1.47(a).

The Manual of Patent Examining Procedure ("MPEP"), § 409.03(j) provides that "[i]n the event the previously nonsigning inventor decides to join the application by filing an executed oath or declaration complying with 37 CFR 1.63, the oath or declaration will be placed in the application file."

Accordingly, the declaration for inventor Haischmann has been entered and made of record.

This application is being forwarded to the Office of Initial Patent Examination for further processing.

Telephone inquiries should be directed to the undersigned at (703) 305-0010.

Kenya A. McLaughlin

Kenya A. McLaughlin
Petitions Attorney
Office of Petitions

UNITED STATES PATENT AND TRADEMARK OFFICE

COMMISSIONER FOR PATENTS
UNITED STATES PATENT AND TRADEMARK OFFICE
P.O. BOX 1450
ALEXANDRIA, VA 22313-1450
www.uspto.gov

J C PATENTS, INC.
4 VENTURE, SUITE 250
IRVINE, CA 92618

**COPY MAILED**

JUN 2 0 2005

**OFFICE OF PETITIONS**

In re Application of :
Tzu-Liang Tsai :
Application No. 10/623,327 :
Filed: July 15, 2003 :
Attorney Docket No. UCIP384 :

ON PETITION

This is a decision on the petition, filed March 21, 2005, to revive the above-identified application under the provisions of 37 CFR 1.137(b).

The petition is **GRANTED**.

The application became abandoned for a failure to reply in a timely manner to the non-final Office action mailed June 22, 2004. A Notice of Abandonment was mailed on December 29, 2004. In response, on March 21, 2005, the present petition was filed.

The petition is found to comply with the requirements of 37 CFR 1.137(b).

Telephone inquiries concerning this decision may be directed to the undersigned at (571) 272-3204. All other inquiries regarding this application should be directed to the Technology Center.

The application file is being forwarded to Technology Center AU 3679 for consideration of the amendment filed March 21, 2005.

Sherry D. Brinkley
Petitions Examiner
Office of Petitions
Office of the Deputy Commissioner
for Patent Examination Policy

UNITED STATES PATENT AND TRADEMARK OFFICE

Commissioner for Patents
United States Patent and Trademark Office
P.O. Box 1450
Alexandria, VA 22313-1450
www.uspto.gov

MERCHANT & GOULD PC
P.O.BOX 2903
MINNEAPOLIS MN 55402-0903

COPY MAILED

JUL 01 2005

OFFICE OF PETITIONS

In re Application of
Richard Daniel Colvin et al
Application No. 10/623,347
Filed: July 18, 2003
Attorney Docket No. 2376.0017

DECISION GRANTING PETITION
UNDER 37 CFR 1.137(b)

This is a decision on the petition under 37 CFR 1.137(b), filed April 8, 2005, to revive the above-identified application.

The petition is **GRANTED**.

The petition satisfies the conditions for revival pursuant to the provisions of 37 CFR 1.137(b) in that (1) the reply in the form of an amendment; (2) the petition fee; and (3) the required statement of unintentional delay have been received. Accordingly, the reply to the nonfinal Office action of June 25, 2004, is accepted as having been unintentionally delayed.

Telephone inquiries concerning this decision should be directed to the undersigned at (571) 272-3208.

This matter is being forwarded to Technology Center AU 2123.

Karen Creasy

Karen Creasy
Petitions Examiner
Office of Petitions
Office of the Deputy Commissioner
for Patent Examination Policy

UNITED STATES PATENT AND TRADEMARK OFFICE

Commissioner for Patents
United States Patent and Trademark Office
P.O. Box 1450
Alexandria, VA 22313-1450
www.uspto.gov

Jean M. Macheledt
501 Skysail Lane
Suite B100
Fort Collins, CO 80525-3133

COPY MAILED
DEC 20 2006
OFFICE OF PETITIONS

| | | |
|---|---|---|
| In re Application of | : | |
| Larry J. Salmen et al. | : | |
| Application No. 10/623,363 | : | DECISION ON PETITION |
| Filed: July 17, 2003 | : | TO WITHDRAW |
| Attorney Docket No. INA-108A | : | FROM RECORD |

This is a decision on the Request to Withdraw as attorney or agent of record under 37 C.F.R. § 1.36(b), filed September 21, 2006.

The request is **APPROVED**.

A grantable request to withdraw as attorney/agent of record must be signed by every attorney/agent seeking to withdraw or contain a clear indication that one attorney is signing on behalf of another/others. A request to withdraw will not be approved unless at least 30 (thirty) days would remain between the date of approval and the later of the expiration date of a time to file a response or the expiration date of the maximum time period which can be extended under 37 C.F.R. § 1.136(a).

The request was signed by Jean Macheledt on behalf of all attorneys of record.

All attorneys/agents associated with the have been withdrawn.

Applicant is reminded that there is no attorney of record at this time.

The request to change the correspondence of record is not acceptable as the requested correspondence address is not that of: (1) the first named signing inventor; or (2) an intervening assignee of the entire interest under 37 C.F.R 3.71. All future communications from the Office will be directed to the first named signing inventor at the first copied address below until otherwise properly notified by the applicant.

There is no outstanding Office action at this time.

Telephone inquiries concerning this decision should be directed to Terri Williams at 571-272-2991

Terri Williams
Terri Williams
Petitions Examiner
Office of Petitions

cc: **Larry J. Salmen**
700 Breakwater Drive
Ft. Collins, CO 80525

cc: **Paul W. Martin, Esq.**
NCR Corporation, Legal Department/IP Section
1700 S. Patterson Blvd.
Dayton, OH 45479-001

UNITED STATES PATENT AND TRADEMARK OFFICE

UNITED STATES DEPARTMENT OF COMMERCE
United States Patent and Trademark Office
Address: COMMISSIONER FOR PATENTS
P.O. Box 1450
Alexandria, Virginia 22313-1450
www.uspto.gov

| APPLICATION NUMBER | FILING OR 371 (c) DATE | FIRST NAMED APPLICANT | ATTY. DOCKET NO./TITLE |
|---|---|---|---|
| 10/623,363 | 07/17/2003 | Larry J. Salmen | INA-108A |

**CONFIRMATION NO. 3165**

*OC000000021664817*

*OC000000021664817*

28304
JEAN M. MACHELEDT
501 SKYSAIL LANE
SUITE B100
FORT COLLINS, CO 80525-3133

Date Mailed: 12/19/2006

## NOTICE REGARDING CHANGE OF POWER OF ATTORNEY

This is in response to the Power of Attorney filed 09/21/2006.

- The withdrawal as attorney in this application has been accepted. Future correspondence will be mailed to the new address of record. 37 CFR 1.33.

---

Terri S. Williams

TERRI S WILLIAMS
OP (571) 272-2991

FORMER ATTORNEY/AGENT COPY

UNITED STATES PATENT AND TRADEMARK OFFICE

Commissioner for Patents
United States Patent and Trademark Office
P.O. Box 1450
Alexandria, VA 22313-1450
www.uspto.gov

SKYPLUS TECHNOLOGIES, LLC
c/o MR. PADRAIC E. MULVIHILL, EXECUTIVE V.P.
1310 TRADEPORT DRIVE-CORPORATE OFFICES
JACKSONVILLE FL 32218

COPY MAILED
SEP 28 2006
OFFICE OF PETITIONS

In re Application of

Barney Kuoyen Huang. :

Application No. 10/623,365

: DECISION ON PETITION

Filed: July 21, 2003

:

Attorney Docket No. BL001

This is a decision on the petition under 37 CFR 1.137(b), filed March 31, 2006, to revive the above-identified application.

The petition is **GRANTED**.

The above-cited application became abandoned for failure to reply in a timely manner to the Notice of Non-Compliant Amendment mailed July 15, 2005, which set a shortened period for reply of one (1) month from its mailing date. No extension of time pursuant to 37 CFR 1.136(a) was obtained within the allowable period. Accordingly, the application became abandoned on August 16, 2005. A Notice of Abandonment was mailed on February 3, 2006.

The amendment filed March 31, 2006 is noted.

It is not apparent whether the person signing the statement of unintentional delay was in a position to have firsthand or direct knowledge of the facts and circumstances of the delay at issue. Nevertheless, such statement is being treated as having been made as the result of a reasonable inquiry into the facts and circumstances of such delay. See 37 CFR 10.18(b) and Changes to Patent Practice and Procedure; Final Rule Notice, 62 Fed. Reg. 53131, 53178 (October 10, 1997), 1203 Off. Gaz. Pat. Office 63, 103 (October 21, 1997). In the event that such an inquiry has not been made, petitioner must make such an inquiry. If such inquiry results in the discovery that it is not correct that the entire delay in filing the required reply from the due date for the reply until the filing of a grantable petition pursuant to 37 CFR 1.137(b) was unintentional, petitioner must notify the Office.

There is no indication that the person signing the instant petition was ever given a power of attorney or authorization of agent to prosecute the above-identified application. While the

request, filed May 5, 2006, to appoint the attorney associated with customer number 57780 is noted, petitioner is advised that no registered attorneys were associated with that customer number.

The application is being forwarded to Technology Center 3600, GAU 3671 for further processing.

Telephone inquiries concerning this decision should be directed to the undersigned at (571) 272-3222.

Kenya A. McLaughlin
Petitions Attorney
Office of Petitions

UNITED STATES PATENT AND TRADEMARK OFFICE

Commissioner for Patents
United States Patent and Trademark Office
P.O. Box 1450
Alexandria, VA 22313-1450
www.uspto.gov

PATREA L. PABST
PABST PATENT GROUP LLP
400 COLONY SQUARE
SUITE 1200
ATLANTA GA 30361

COPY MAILED
NOV 3 0 2006
OFFICE OF PETITIONS

| | | |
|---|---|---|
| In re Application of | : | |
| Elizabeth M. Denholm et al. | : | |
| Application No. 10/623,383 | : | DECISION ON PETITION |
| Filed: July 18, 2003 | : | TO WITHDRAW |
| Attorney Docket No. IT 106 CON | : | FROM RECORD |
| | : | |

This is a decision on the Request to Withdraw as attorney or agent of record under 37 C.F.R. § 1.36(b), filed September 25, 2006.

The request is **NOT APPROVED**.

A grantable request to withdraw as attorney/agent of record must be signed by every attorney/agent seeking to withdraw or contain a clear indication that one attorney is signing on behalf of another/others. A request to withdraw will not be approved unless at least 30 (thirty) days would remain between the date of approval and the later of the expiration date of a time to file a response or the expiration date of the maximum time period which can be extended under 37 C.F.R. § 1.136(a).

The request cannot be approved because there remain less than 30 (thirty days) between the date of this decision and the maximum extendable time period for filing a response to the Office action mailed on June 5, 2006.

All future communications from the Office will continue to be directed to the above-listed address until otherwise notified by applicant.

Telephone inquiries concerning this decision should be directed to Terri Williams at 571-272- 2991.

T. Williams
Terri Williams
Petitions Examiner
Office of Petitions

cc: **Li-Hsien Rin-Laures, M.D., Esq.**
233 South Wacker
6300 Sears Tower
Chicago, IL 60606-6357

UNITED STATES PATENT AND TRADEMARK OFFICE

COMMISSIONER FOR PATENTS
UNITED STATES PATENT AND TRADEMARK OFFICE
P.O. BOX 1450
ALEXANDRIA, VA 22313-1450
www.uspto.gov

Paper No.

STEUBING MCGUINESS & MANARAS LLP
30 NAGOG PARK DRIVE
ACTON MA 01720

**COPY MAILED**

**SEP 1 5 2003**

**OFFICE OF PETITIONS**

| | |
|---|---|
| In re Application of | : |
| Ould-Brahim | : |
| Application No. 10/623,400 | :DECISION GRANTING PETITION |
| Filed: 17 July, 2003 | : |
| Attorney Docket No. 120.288. 38898-0047 | : |

This is a decision on the petition filed on 11 August, 2003, requesting that the above-identified application be accorded a filing date of 17 July, 2003, instead of a filing date of 18 July, 2003.

Petitioner requests the earlier filing date on the basis that the application was deposited in Express Mail service on 17 July, 2003, pursuant to the requirements of 37 CFR 1.10. Petitioner acknowledges that the date of the deposit in Express Mail shown on petitioner's Express Mail receipt, as completed by the USPS, is 18 July, 2003, but argues that the application was actually deposited with the USPS on 17 July, 2003.

The present petition is accompanied by, *inter alia*, a copy of USPS Express Mail Label No. EV329723873US, the Label Number found on the itemized transmittal letter accompanying the application papers, showing a "date-in" of 07/18/03. Petitioner has included an affidavit of counsel's office manager, Carol Mahoney, stating that she deposited the application in an Express Mail drop box on 17 July, 2003, prior to the last scheduled pickup of the day. Petitioners have also included a copy of a letter to the client prepared for and signed by petitioner's counsel on 17 July, 2003, after the application was deposited in Express Mail service and within one business day of deposit.

In view of the evidence present in the file, it is concluded that the correct date of deposit in Express Mail service is 17 July, 2003. Therefore, the application is entitled to a filing date of 17 July, 2003.

The petition is granted. No petition fee is due and none has been charged.

It is noted that petitioner asserts that counsel's office manager completed the "date-in" before depositing the application in Express Mail, and that the USPS altered the "date-in". In future Express Mail filings, the "date-in" must be completed by the USPS, not petitioner. The entry of the "date-in" by the USPS verifies the date the USPS accepted the application. If petitioner completes the "date-in", however, that date does **not** serve as evidence of the date that the USPS accepted the application.

The application is being returned to Office of Initial Patent Examination for further processing with a filing date of 17 July, 2003.

Telephone inquiries may be directed to the undersigned at 703-308-6918.

Douglas I. Wood
Senior Petitions Attorney
Office of Petitions

UNITED STATES PATENT AND TRADEMARK OFFICE

COMMISSIONER FOR PATENTS
UNITED STATES PATENT AND TRADEMARK OFFICE
P.O. BOX 1450
ALEXANDRIA, VA 22313-1450
www.uspto.gov

Paper No.

HEWLETT PACKARD COMPANY
P O BOX 272400, 3404 E.
HARMONY ROAD
INTELLECTUAL PROPERTY
ADMINISTRATION
FORT COLLINS CO 80527-2400

**COPY MAILED**

SEP 0 2 2008

**OFFICE OF PETITIONS**

| | | |
|---|---|---|
| In re Application of | : | |
| Chheda et al. | : | DECISION ON PETITION |
| Application No. 10/623,417 | : | |
| Filed: July 18, 2003 | : | |
| Atty Docket No. 200308578-1 | : | |

This is a decision on the PETITION FOR REVIVAL OF AN APPLICATION FOR PATENT ABANDONED UNINTENTIONALLY UNDER 37 CFR 1.137(b) filed June 23, 2008.

The petition is **GRANTED**.

The above-identified application became abandoned for failure to file a reply to the non-final Office action mailed August 24, 2007. This Office action set a shortened statutory period for reply of three (3) months, with extensions of time obtainable under § 1.136(a). No reply received and no extension of time obtained, the application became abandoned on November 25, 2007. A courtesy Notice of Abandonment was sent on May 19, 2008.

The petition includes the required reply in the form of an amendment and the required statement of unintentional delay. The petition fee set forth in 37 CFR § 1.17(m) has been charged to Deposit Account No. 08-2025, as authorized. No terminal disclaimer is required.

Technology Center AU 2116 has been advised of this decision. The application is, thereby, forwarded to the examiner for

consideration of the amendment submitted on petition filed June 23, 2008.

Telephone inquiries specific to this decision should be directed to the undersigned at (571) 272-3219.

Nancy Johnson
Senior Petitions Attorney
Office of Petitions

UNITED STATES PATENT AND TRADEMARK OFFICE

UNITED STATES DEPARTMENT OF COMMERCE
United States Patent and Trademark Office
Address: COMMISSIONER FOR PATENTS
P.O. Box 1450
Alexandria, Virginia 22313-1450
www.uspto.gov

PROSKAUER ROSE LLP
One International Place
Boston, MA 02110

Mail Date: 04/20/2010

| | | |
|---|---|---|
| **Applicant** | : Yuli Zhou | : DECISION ON REQUEST FOR |
| **Patent Number** | : 7660761 | : RECALCULATION of PATENT |
| **Issue Date** | : 02/09/2010 | : TERM ADJUSTMENT IN VIEW |
| **Appliction No** | : 10/623,434 | : OF WYETH AND NOTICE OF INTENT TO |
| **Filed** | : 07/17/2003 | : ISSUE CERTIFICATE OF CORRECTION |
| | | : |

The Request for Recalculation is **GRANTED** to the extent indicated.

The patent term adjustment has been determined to be **1244** days. The USPTO will *sua sponte* issue a certificate of correction reflecting the amount of PTA days determined by the recalculation.

Prior to the issuance of the certificate of correction, the USPTO will afford patentee an opportunity to be heard and request reconsideration. Accordingly, patentee has **one month or thirty (30) days**, whichever is longer, to file a request for reconsideration of this patent term adjustment calculation. See 35 U.S.C. 154(b)(3)(B)(ii) and 37 CFR 1.322(a)(4). No extensions of time will be granted under 37 CFR 1.136.

Patentee should use document code PET.OP if electronically filing a request for reconsideration of this patent term adjustment calculation. The patentee must also include the information required by 37 CFR 1.705(b)(2) and the fee required by 37 CFR 1.18(e). If patentee does not file a timely request for reconsideration of this patent term adjustment calculation including the information required by 37 CFR 1.705(b)(2) and the fee required by 37 CFR 1.18(e), the USPTO will issue a certificate of correction reflecting the PTA determination noted above.

Patentee should be aware that in order to preserve the right to review in the United States District Court for the District of Columbia of the USPTO patent term adjustment determination, patentee must ensure that he or she also take the steps required under 35 U.S.C. 154(b)(4)(A) in a timely manner. Nothing in the request for recalculation should be construed as providing an alternative time frame for commencing a civil action under 35 U.S.C. 154(b)(4)(A).

Any questions concerning this decision should be directed to the Office of Patent Legal Administration at 571-272-7702.

UNITED STATES PATENT AND TRADEMARK OFFICE

UNITED STATES DEPARTMENT OF COMMERCE
United States Patent and Trademark Office
Address: COMMISSIONER FOR PATENTS
P.O. Box 1450
Alexandria, Virginia 22313-1450
www.uspto.gov

PROSKAUER ROSE LLP
One International Place
Boston, MA 02110

Mail Date: 04/21/2010

| | | |
|---|---|---|
| **Applicant** | : Yuli Zhou | : DECISION ON REQUEST FOR |
| **Patent Number** | : 7660761 | : RECALCULATION of PATENT |
| **Issue Date** | : 02/09/2010 | : TERM ADJUSTMENT IN VIEW |
| **Appliction No** | : 10/623,434 | : OF WYETH AND NOTICE OF INTENT TO |
| **Filed** | : 07/17/2003 | : ISSUE CERTIFICATE OF CORRECTION |
| | | : |

The Request for Recalculation is **GRANTED** to the extent indicated.

The patent term adjustment has been determined to be **1244** days. The USPTO will *sua sponte* issue a certificate of correction reflecting the amount of PTA days determined by the recalculation.

Prior to the issuance of the certificate of correction, the USPTO will afford patentee an opportunity to be heard and request reconsideration. Accordingly, patentee has **one month or thirty (30) days**, whichever is longer, to file a request for reconsideration of this patent term adjustment calculation. See 35 U.S.C. 154(b)(3)(B)(ii) and 37 CFR 1.322(a)(4). No extensions of time will be granted under 37 CFR 1.136.

Patentee should use document code PET.OP if electronically filing a request for reconsideration of this patent term adjustment calculation. The patentee must also include the information required by 37 CFR 1.705(b)(2) and the fee required by 37 CFR 1.18(e). If patentee does not file a timely request for reconsideration of this patent term adjustment calculation including the information required by 37 CFR 1.705(b)(2) and the fee required by 37 CFR 1.18(e), the USPTO will issue a certificate of correction reflecting the PTA determination noted above.

Patentee should be aware that in order to preserve the right to review in the United States District Court for the District of Columbia of the USPTO patent term adjustment determination, patentee must ensure that he or she also take the steps required under 35 U.S.C. 154(b)(4)(A) in a timely manner. Nothing in the request for recalculation should be construed as providing an alternative time frame for commencing a civil action under 35 U.S.C. 154(b)(4)(A).

Any questions concerning this decision should be directed to the Office of Patent Legal Administration at 571-272-7702.

UNITED STATES PATENT AND TRADEMARK OFFICE

Commissioner for Patents
United States Patent and Trademark Office
P.O. Box 1450
Alexandria, VA 22313-1450
www.uspto.gov

JJGJR.: 08-06

Paper No:__

DADE BEHRING INC.
LEGAL DEPARTMENT
1717 DEERFIELD ROAD
DEERFIELD IL 60015

COPY MAILED
SEP 1 1 2006
OFFICE OF PETITIONS

| | | |
|---|---|---|
| In re Application of | : | |
| Lee, et al. | : | DECISION |
| Application No. 10/623,436 | : | |
| Filing Date: 18 July, 2003 | : | |
| Attorney Docket No.: DCS-9158 | : | |

This is a revised decision on the petition filed on 20 June, 2006, requesting withdrawal of the holding of abandonment under 37 C.F.R. §1.181.

For the reasons set forth below, the petition as considered under 37 C.F.R. §1.181 is **DISMISSED**.

**NOTES:**

**Monitoring of the status of applications on Private PAIR and charges or lack thereof to one's deposit account can inform one's management of application responses and provide an indication when mailings of Office actions should be expected and/or if transactions have occurred.**

**Status Inquiries filed at three (3) or four (4) month intervals provide a demonstration of diligence and attention in supporting a petition seeking relief under 37 C.F.R. §1.181 because regulatory requirements require the filing of such a petition within two (2) months of the act complained of.**

(1) Any petition (and fee) for reconsideration of this decision must be submitted

within two (2) months from the mail date of this decision. Extensions of time under 37 C.F.R. §1.136(a) are permitted. The reconsideration request should include a cover letter entitled "Renewed Petition under 37 C.F.R. §1.181."

(If Petitioner is unable to present even a satisfactory showing to support a petition under 37 C.F.R. §1.137(a), and Petitioner's only alternative will be to file a petition under 37 C.F.R. §1.137(b).)

(2) Thereafter, there will be no further reconsideration of this matter.[1]

## BACKGROUND

The record reflects that:

- Petitioner failed to reply timely and properly to the Notice to File Corrected Application Papers (Notice of Allowance Mailed) mailed on 3 February, 2006, with reply due absent an extension of time on or before Monday, 6 March, 2006 (30 days);
- the application went abandoned after midnight 6 March, 2006;
- the Office mailed the Notice of Abandonment on 12 June, 2006;
- on 20 June, 2006, Petitioner filed the instant petition with the allegation that he had filed a reply on 9 February, 2006, and a copy of the reply averred to have been filed, however, Petitioner provided no FAX-back receipt evidencing Office receipt, and, further, Petitioner appears to have transmitted such reply as may have been sent to a number other than the Office FAX-filing line ((571) 273-8300), as required and designated in the Rules of Practice, the Manual of Patent Examining Procedure (see: MPEP §502.01(I)(A)), the Official Gazette and the Office website (www.uspto.gov).

Out of an abundance of caution, Petitioners always are reminded that the filing of a petition under 37 C.F.R. §1.181 does not toll any periods that may be running any action by the Office and a petition seeking relief under the regulation must be filed within two (2) months of the act complained of (see: 37 C.F.R. §1.181(f)), and those registered to practice *and* all others who

---

[1] For more than a century, punctuality and due diligence, equally with good faith, have been deemed essential requisites to the success of those who seek to obtain the special privileges of the patent law, and they are demanded in the interest of the public and for the protection of rival inventors. See: Porter v. Louden, 7 App.D.C. 64 (C.A.D.C. 1895), citing Wollensak v. Sargent, 151 U.S. 221, 228, 38 L. Ed. 137, 14 S. Ct. 291 (1894). An invention benefits no one unless it is made public, and the rule of diligence should be so applied as to encourage reasonable promptness in conferring this benefit upon the public. Automatic Electric Co. v. Dyson, 52 App. D.C. 82; 281 F. 586 (C.A.D.C. 1922). Generally, 35 U.S.C. §6; 37 C.F.R.§§1.181, 182, 183.

make representations before the Office are reminded to inquire into the underlying facts of representations made to the Office and support averments with the appropriate documentation–since all owe to the Office the continuing duty to disclose.[2]

## STATUTES, REGULATIONS AND ANALYSIS

Congress has authorized the Commissioner to "revive an application if the delay is shown to the

---

[2] See supplement of 17 June, 1999. The Patent and Trademark Office is relying on petitioner's duty of candor and good faith and accepting a statement made by Petitioner. See Changes to Patent Practice and Procedure, 62 Fed. Reg. at 53160 and 53178, 1203 Off. Gaz. Pat. Office at 88 and 103 (responses to comments 64 and 109)(applicant obligated under 37 C.F.R. §10.18 to inquire into the underlying facts and circumstances when providing statements to the Patent and Trademark Office).

Specifically, the regulations at 37 C.F.R. §10.18 provide:

**§ 10.18 Signature and certificate for correspondence filed in the Patent and Trademark Office.**
(a) For all documents filed in the Office in patent, trademark, and other non-patent matters, except for correspondence that is required to be signed by the applicant or party, each piece of correspondence filed by a practitioner in the Patent and Trademark Office must bear a signature by such practitioner complying with the provisions of §1.4(d), §1.4(e), or § 2.193(c)(1) of this chapter.
(b) By presenting to the Office (whether by signing, filing, submitting, or later advocating) any paper, the party presenting such paper, whether a practitioner or non-practitioner, is certifying that—
(1) All statements made therein of the party's own knowledge are true, all statements made therein on information and belief are believed to be true, and all statements made therein are made with the knowledge that whoever, in any matter within the jurisdiction of the Patent and Trademark Office, knowingly and willfully falsifies, conceals, or covers up by any trick, scheme, or device a material fact, or makes any false, fictitious or fraudulent statements or representations, or makes or uses any false writing or document knowing the same to contain any false, fictitious or fraudulent statement or entry, shall be subject to the penalties set forth under 18 U.S.C. 1001, and that violations of this paragraph may jeopardize the validity of the application or document, or the validity or enforceability of any patent, trademark registration, or certificate resulting therefrom; and
(2) To the best of the party's knowledge, information and belief, formed after an inquiry reasonable under the circumstances, that —
(i) The paper is not being presented for any improper purpose, such as to harass someone or to cause unnecessary delay or needless increase in the cost of prosecution before the Office;
(ii) The claims and other legal contentions therein are warranted by existing law or by a nonfrivolous argument for the extension, modification, or reversal of existing law or the establishment of new law;
(iii) The allegations and other factual contentions have evidentiary support or, if specifically so identified, are likely to have evidentiary support after a reasonable opportunity for further investigation or discovery; and
(iv) The denials of factual contentions are warranted on the evidence, or if specifically so identified, are reasonably based on a lack of information or belief.
(c) Violations of paragraph (b)(1) of this section by a practitioner or non-practitioner may jeopardize the validity of the application or document, or the validity or enforceability of any patent, trademark registration, or certificate resulting therefrom. Violations of any of paragraphs (b)(2)(i) through (iv) of this section are, after notice and reasonable opportunity to respond, subject to such sanctions as deemed appropriate by the Commissioner, or the Commissioner's designee, which may include, but are not limited to, any combination of —
(1) Holding certain facts to have been established;
(2) Returning papers;
(3) Precluding a party from filing a paper, or presenting or contesting an issue;
(4) Imposing a monetary sanction;
(5) Requiring a terminal disclaimer for the period of the delay; or
(6) Terminating the proceedings in the Patent and Trademark Office.
(d) Any practitioner violating the provisions of this section may also be subject to disciplinary action. See § 10.23(c)(15).
[Added 50 FR 5175, Feb. 6, 1985, effective Mar. 8, 1985; para. (a) revised, 58 FR 54494, Oct. 22, 1993, effective Nov. 22, 1993; paras. (a) & (b) revised, paras. (c) & (d) added, 62 FR 53131, Oct. 10, 1997, effective Dec. 1, 1997; para. (a) revised, 69 FR 56481, Sept. 21, 2004, effective Oct. 21, 2004]

satisfaction of the Commissioner to have been "unavoidable." 35 U.S.C. §133 (1994).[3]

The regulations at 37 C.F.R. §1.137(a) and (b) set forth the requirements for a petitioner to revive a previously unavoidably or unintentionally, respectively, abandoned application under this congressional grant of authority. The language of 35 U.S.C. §133 and 37 C.F.R. §1.137(a) is clear, unambiguous, and without qualification: the delay in tendering the reply to the outstanding Office action, as well as filing the first petition seeking revival, must have been unavoidable for the reply now to be accepted on petition.[4]

Delays in responding properly raise the question whether delays are unavoidable.[5] Where there is a question whether the delay was unavoidable, Petitioners must meet the burden of establishing that the delay was unavoidable within the meaning of 35 U.S.C. §133 and 37 C.F.R. §1.137(a).[6] And the Petitioner must be diligent in attending to the matter.[7] Failure to do so does not constitute the care required under Pratt, and so cannot satisfy the test for diligence and due care.

(By contrast, unintentional delays are those that do not satisfy the very strict statutory and regulatory requirements of unavoidable delay, and also, by definition, are not intentional.[8])).

Allegations as to the Request to
Withdraw the Holding of Abandonment

The courts have determined the construct for properly supporting a petition seeking withdrawal of a holding of abandonment.[9]

---

[3] 35 U.S.C. §133 provides:
**35 U.S.C. §133 Time for prosecuting application.**
Upon failure of the applicant to prosecute the application within six months after any action therein, of which notice has been given or mailed to the applicant, or within such shorter time, not less than thirty days, as fixed by the Commissioner in such action, the application shall be regarded as abandoned by the parties thereto, unless it be shown to the satisfaction of the Commissioner that such delay was unavoidable.

[4] Therefore, by example, an unavoidable delay in the payment of the Filing Fee might occur if a reply is shipped by the US Postal Service, but due to catastrophic accident, the delivery is not made.

[5] See: *Changes to Patent Practice and Procedure*; *Final Rule Notice*, 62 *Fed. Reg.* at 53158-59 (October 10, 1997), 1203 *Off. Gaz. Pat. Office* at 86-87 (October 21, 1997).

[6] See: In re Application of G, 11 USPQ2d 1378, 1380 (Comm'r Pats. 1989).

[7] See: Diligence in Filing Petitions to Revive and Petitions to Withdraw the Holding of Abandonment, 1124 Off. Gaz. Pat. Office 33 (March 19, 1991). It was and is Petitioner's burden to exercise diligence in seeking either to have the holding of abandonment withdrawn or the application revived. See 1124 Off. Gaz. Pat. Office supra.

[8] Therefore, by example, an unintentional delay in the reply might occur if the reply and transmittal form are to be prepared for shipment by the US Postal Service, but other pressing matters distract one's attention and the mail is not timely deposited for shipment.

[9] See: Delgar v. Schulyer, 172 USPQ 513 (D.D.C. 1971).

The commentary at MPEP §711.03(c) provides:

* * *

**B. Petition To Withdraw Holding of Abandonment Based on Evidence That a Reply Was Timely Mailed or Filed**

37 C.F.R. §1.10(c) through §1.10(e) and §1.10(g) set forth procedures for petitioning the Director of the USPTO to accord a filing date to correspondence as of the date of deposit of the correspondence as "Express Mail." A petition to withdraw the holding of abandonment relying upon a timely reply placed in "Express Mail" must include an appropriate petition under 37 C.F.R. §1.10(c), (d), * (e), or (g) (see MPEP § 513). When a paper is shown to have been mailed to the Office using the "Express Mail" procedures, the paper must be entered in PALM with the "Express Mail" date.

Similarly, applicants may establish that a reply was filed with a postcard receipt that properly identifies the reply and provides *prima facie* evidence that the reply was timely filed. See MPEP § 503. For example, if the application has been held abandoned for failure to file a reply to a first Office action, and applicant has a postcard receipt showing that an amendment was timely filed in response to the Office action, then the holding of abandonment should be withdrawn upon the filing of a petition to withdraw the holding of abandonment. When the reply is shown to have been timely filed based on a postcard receipt, the reply must be entered into PALM using the date of receipt of the reply as shown on the post card receipt.

<u>Where a certificate of mailing under 37 C.F.R. §1.8, but not a postcard receipt, is relied upon</u> in a petition to withdraw the holding of abandonment, see 37 C.F.R. §1.8(b) and MPEP § 512. As stated in 37 C.F.R §1.8(b)(3) the statement that attests to the previous timely mailing or transmission of the correspondence must be on a personal knowledge basis, or to the satisfaction of the Director of the USPTO. If the statement attesting to the previous timely mailing is not made by the person who signed the Certificate of Mailing (i.e., there is no personal knowledge basis), then the statement attesting to the previous timely mailing should include evidence that supports the conclusion that the

> correspondence was actually mailed (e.g., copies of a mailing log establishing that correspondence was mailed for that application). When the correspondence is shown to have been timely filed based on a certificate of mailing, the correspondence is entered into PALM with the actual date of receipt (i.e., the date that the duplicate copy of the papers was filed with the statement under 37 C.F.R. §1.8).
>
> 37 C.F.R. §1.8(b) also permits applicant to notify the Office of a previous mailing or transmission of correspondence and submit a statement under 37 C.F.R. 1.8(b)(3) accompanied by a duplicate copy of the correspondence when a reasonable amount of time (e.g., more than one month) has elapsed from the time of mailing or transmitting of the correspondence. Applicant does not have to wait until the application becomes abandoned before notifying the Office of the previous mailing or transmission of the correspondence. Applicant should check the private Patent Application Information Retrieval (PAIR) system for the status of the correspondence before notifying the Office. See MPEP § 512.
>
> * * *

Thus, Petitioner appears not to have satisfied the showing requirements described above.

## CONCLUSION

Because Petitioner has not satisfied the burdens set forth in Delgar v. Schulyer, the petition as considered under 37 C.F.R. §1.181 hereby is **dismissed**.

## ALTERNATIVE VENUE

It appears that, because Petitioner failed to file of record a response to the Office action in question, Petitioner's only alternative to irretrievable abandonment may be petition alleging unintentional delay under 37 C.F.R. §1.137(b).[10]

Petitioner may wish to file such a petition to the Commissioner requesting revival of an application abandoned due to unintentional delay. (See: http://www.uspto.gov/web/offices/pac/mpep/documents/0700_711_03_c.htm#sect711.03c )

---

[10] The regulations at 37 C.F.R. §1.183 sets forth that waiver of the rules is "subject to such other requirements as may be imposed."

A petition to revive on the grounds of unintentional delay must be filed promptly and such petition must be accompanied by the reply (the amendment), the petition fee, and a statement that "the entire delay in filing the required reply from the due date for the reply until the filing of a grantable petition was unintentional." (The statement is in the form available online.)

Further correspondence with respect to this matter should be addressed as follows:[11]

By mail: Commissioner for Patents[12]
P.O. Box 1450
Alexandria, VA 22313-1450

By FAX: IFW Formal Filings
(571) 273-8300
ATTN.: Office of Petitions

By hand: Mail Stop: Petition
Customer Service Window
Randolph Building
401 Dulany Street
Alexandria, VA 22314

While telephone inquiries regarding this decision may be directed to the undersigned at (571) 272-3214, it is noted that all practice before the Office is in writing (see: 37 C.F.R. §1.2[13]) and the proper authority for action on any matter in this regard are the statutes (35 U.S.C.), regulations (37 C.F.R.) and the commentary on policy (MPEP). Therefore, no telephone discussion may be controlling or considered authority for Petitioner's action(s).

John J. Gillon, Jr.
Senior Attorney
Office of Petitions

---

[11] On July 15, 2005, the Central Facsimile (FAX) Number changed to (571) 273-8300. The old FAX number no longer is in service and (571) 273-8300 will be the only facsimile number recognized for centralized delivery. (For further information. see: http://www.uspto.gov/web/offices/pac/dapp/opla/preognotice/cfax062005.pdf.)

[12] To determine the appropriate addresses for other subject-specific correspondence, refer to the USPTO Web site at www.uspto.gov.

[13] The regulations at 37 C.F.R. §1.2 provide:
**§1.2 Business to be transacted in writing.**
All business with the Patent and Trademark Office should be transacted in writing.The personal attendance of applicants or their attorneys or agents at the Patent and Trademark Office is unnecessary. The action of the Patent and Trademark Office will be based exclusively on the written record in the Office. No attention will be paid to any alleged oral promise, stipulation,or understanding in relation to which there is disagreement or doubt.

UNITED STATES PATENT AND TRADEMARK OFFICE

Commissioner for Patents
United States Patent and Trademark Office
P.O. Box 1450
Alexandria, VA 22313-1450
www.uspto.gov
DIW Nov-06

DADE BEHRING INC.
LEGAL DEPARTMENT
1717 DEERFIELD ROAD
DEERFIELD IL 60015

COPY MAILED

NOV 20 2006

OFFICE OF PETITIONS

| | | |
|---|---|---|
| In re Application of | : | |
| Lee et al. | : | |
| Application No. 10/623,436 | : | DECISION ON PETITION |
| Filed: 18 July, 2003 | : | |
| Atty Docket No. DCS-9158 | : | |

This is a decision on the petition filed on 10 November, 2006, under 37 CFR 1.137(b),[1] to revive the above-identified application.

The petition is **GRANTED**.

The application became abandoned on 6 March, 2006, for failure to timely reply to the Notice to File Corrected Application Papers *Notice of Allowance Mailed*, mailed on 3 February, 2006, which set

---

[1] Effective December 1, 1997, the provisions of 37 CFR 1.137(b) now provide that where the delay in reply was unintentional, a petition may be filed to revive an abandoned application or a lapsed patent pursuant to 37 CFR 1.137(b). A grantable petition filed under the provisions of 37 CFR 1.137(b) must be accompanied by:

(1) the required reply, unless previously filed. In a nonprovisional application abandoned for failure to prosecute, the required reply may be met by the filing of a continuing application. In a nonprovisional utility or plant application filed on or after June 8, 1995, and abandoned for failure to prosecute, the required reply may also be met by the filing of a request for continuing examination in compliance with § 1.114. In an application or patent, abandoned or lapsed for failure to pay the issue fee or any portion thereof, the required reply must be the payment of the issue fee or any outstanding balance thereof. In an application, abandoned for failure to pay the publication fee, the required reply must include payment of the publication fee.

(2) the petition fee as set forth in 37 CFR 1.17(m);

(3) a statement that the entire delay in filing the required reply from the due date for the reply until the filing of a grantable petition pursuant to 37 CFR 1.137(b) was unintentional. The Commissioner may required additional information where there is a question whether the delay was unintentional; and

(4) any terminal disclaimer (and fee as set forth in 37 CFR 1.20(d)) required pursuant to 37 CFR 1.137(c)).

a 30 day period for reply. The filing of the present petition precedes the mailing of Notice of Abandonment. The petition to withdraw the holding of abandonment filed on 20 June, 2006, was dismissed on 11 September, 2006.

Petitioners have filed the requested correction to the specification.

As the issue fee has been paid, the application may issue without the requested correction to the specification. As such, it is suggested that applicants may wish to file a certificate of correction (along with the required $100.00) fee, to effect the directed correction.

This application is being referred to the Publishing Division for processing into a patent.

Telephone inquiries concerning this matter may be directed to the undersigned at (571)272-3231.

D Wood

Douglas I. Wood
Senior Petitions Attorney
Office of Petitions

UNITED STATES PATENT AND TRADEMARK OFFICE

Commissioner for Patents
United States Patent and Trademark Office
P.O. Box 1450
Alexandria, VA 22313-1450
www.uspto.gov

SEP 17 2004

PITTS AND BRITTIAN P C
P O BOX 51295
KNOXVILLE TN 37950-1295

| | | |
|---|---|---|
| In re Application of | : | |
| D. W. Townsend et al | : | |
| Serial No. 10/623,437 | : | DECISION ON PETITION |
| Filed: July 18, 2003 | : | |
| Title: Combined PET and X-Ray CT Tomograph | : | |

This is in response to applicants' petition filed June 18, 2003, to make the above-identified application special under the provisions of 37 CFR 1.102(c), based on the age of the applicant.

Applicant has satisfied the provisions set forth in M.P.E.P. 708.02, IV. Therefore the petition is **GRANTED**.

**The application will be forwarded to the examiner for action on the merits commensurate with this decision.**

Should there be any questions with regard to this letter please contact John Kittle by letter addressed to the Director, Technology Center 3700/2900, P.O. Box 1450 Alexandria, VA 22313-1450, or by telephone at (703) 308-0873 or by facsimile transmission at (703) 308-3139.

John E. Kittle

John E. Kittle
Director
Technology Center 3700/2900

UNITED STATES PATENT AND TRADEMARK OFFICE

Commissioner for Patents
United States Patent and Trademark Office
P.O. Box 1450
Alexandria, VA 22313-1450
www.uspto.gov

SPRINT
6391 SPRINT PARKWAY
KSOPHT0101-Z2100
OVERLAND PARK KS 66251-2100

MAILED

JUL 13 2009

OFFICE OF PETITIONS

In re Application
David Welch
Application No. 10/623,439
Filed: July 17, 2003
Attorney Docket No. **2333**

: DECISION ON APPLICATION
: FOR PATENT TERM ADJUSTMENT

This is in response to the "REQUEST FOR RECONSIDERATION OF PATENT TERM ADJUSTMENT UNDER 37 C.F.R. 1.705(b)-(d)" filed May 7, 2009. Applicant requests that the determination of patent term adjustment be corrected from nine hundred six (906) days to one thousand six hundred twenty-eight (1628) days. Applicant requests this correction on the basis that the Office will take in excess of three years to issue this patent and in light of the recent court decision in Wyeth v. Dudas, No. 07-1492 (D.D.C. September 30, 2008).

As the instant application for patent term adjustment requests reconsideration of the patent term adjustment as it relates to the Office's failure to issue the patent within 3 years of the filing date, a decision is being **held in abeyance** until after the actual patent date. Knowledge of the actual date the patent issues is required to calculate the amount, if any, of additional patent term patentee is entitled to for Office failure to issue the patent within 3 years. See § 1.703(b).

Applicant is given TWO (2) MONTHS from the issue date of the patent to file a written request for reconsideration of the patent term adjustment for Office failure to issue the patent within 3 years. A copy of this decision should accompany the request. Applicant may seek such consideration without payment of an additional fee. However, as to all other bases for seeking reconsideration of the patent term adjustment indicated in the patent, all requirements of § 1.705(d) must be met. Requests for reconsideration on other bases must be timely filed and must include payment of the required fee.

Rather than file the request for reconsideration of Patent Term Adjustment at the time of the mailing of the notice of allowance, applicant is advised that they may wait until the time of the issuance of the patent and file a request for reconsideration of the patent term pursuant to 37 CFR 1.705(d). The USPTO notes that it does not calculate the

amount of time earned pursuant to 37 CFR 1.702(b) until the time of the issuance of the patent and accordingly, the Office will consider any request for reconsideration of the patent term adjustment due to an error in the calculation of 37 CFR 1.702(b) to be timely if the request for reconsideration is filed within two months of the issuance of the patent.

The Office acknowledges submission of the $200.00 fee set forth in 37 CFR 1.18(e). No additional fees are required.

The application is being forwarded to the Office of Data Management for issuance of the patent. The patent term adjustment indicated on the patent (as shown on the Issue Notification mailed about three weeks prior to patent issuance) will include any additional adjustment accrued both for Office delay in issuing the patent more than four months after payment of the issue fee and satisfaction of all outstanding requirements, and for the Office taking in excess of three years to issue the patent (to the extent that the three-year period does not overlap with periods already accorded).

Telephone inquiries specific to this decision should be directed to Senior Petitions Attorney Patricia Faison-Ball at (571) 272-3212.

Kery A. Fries

Kery A. Fries
Senior Legal Advisor
Office of Patent Legal Administration
Office of Deputy Commissioner
for Examination Policy

UNITED STATES PATENT AND TRADEMARK OFFICE

UNITED STATES DEPARTMENT OF COMMERCE
United States Patent and Trademark Office
Address: COMMISSIONER FOR PATENTS
P.O. Box 1450
Alexandria, Virginia 22313-1450
www.uspto.gov

SPRINT
6391 SPRINT PARKWAY
KSOPHT0101-Z2100
OVERLAND PARK, KS 66251-2100

Mail Date: 04/21/2010

| | | |
|---|---|---|
| **Applicant** | : David Welch | : DECISION ON REQUEST FOR |
| **Patent Number** | : 7573867 | : RECALCULATION of PATENT |
| **Issue Date** | : 08/11/2009 | : TERM ADJUSTMENT IN VIEW |
| **Appliction No** | : 10/623,439 | : OF WYETH AND NOTICE OF INTENT TO |
| **Filed** | : 07/17/2003 | : ISSUE CERTIFICATE OF CORRECTION |
| | | : |

The Request for Recalculation is **GRANTED** to the extent indicated.

The patent term adjustment has been determined to be **1757** days. The USPTO will *sua sponte* issue a certificate of correction reflecting the amount of PTA days determined by the recalculation.

Prior to the issuance of the certificate of correction, the USPTO will afford patentee an opportunity to be heard and request reconsideration. Accordingly, patentee has **one month or thirty (30) days**, whichever is longer, to file a request for reconsideration of this patent term adjustment calculation. See 35 U.S.C. 154(b)(3)(B)(ii) and 37 CFR 1.322(a)(4). No extensions of time will be granted under 37 CFR 1.136.

Patentee should use document code PET.OP if electronically filing a request for reconsideration of this patent term adjustment calculation. The patentee must also include the information required by 37 CFR 1.705(b)(2) and the fee required by 37 CFR 1.18(e). If patentee does not file a timely request for reconsideration of this patent term adjustment calculation including the information required by 37 CFR 1.705(b)(2) and the fee required by 37 CFR 1.18(e), the USPTO will issue a certificate of correction reflecting the PTA determination noted above.

Patentee should be aware that in order to preserve the right to review in the United States District Court for the District of Columbia of the USPTO patent term adjustment determination, patentee must ensure that he or she also take the steps required under 35 U.S.C. 154(b)(4)(A) in a timely manner. Nothing in the request for recalculation should be construed as providing an alternative time frame for commencing a civil action under 35 U.S.C. 154(b)(4)(A).

Any questions concerning this decision should be directed to the Office of Patent Legal Administration at 571-272-7702.

UNITED STATES PATENT AND TRADEMARK OFFICE

Commissioner for Patents
United States Patent and Trademark Office
P.O. Box 1450
Alexandria, VA 22313-1450
www.uspto.gov
DIW d7-04

RICHARD S. MACMILLAN
MACMILLAN, SOBANSKI & TODD, LLC
ONE MARITIME PLAZA, FOURTH FLOOR
720 WATER STREET
TOLEDO OH 43604

COPY MAILED

JUL 1 9 2004

OFFICE OF PETITIONS

| | |
|---|---|
| In re Application of | : |
| Joder, Cox, and Baugh | : |
| Application No. 10/623,478 | : DECISION ACCORDING STATUS |
| Filed: 18 July, 2003 | : UNDER 37 CFR 1.47(a) |
| Attorney Docket No. 1-23428 | : |

This is in response to the petition under 37 CFR 1.47(a)[1] filed on 26 April, 2004 (certificate of mailing date 22 April, 2004). The petition is **GRANTED**.

Petitioners have shown that non-signing inventor Anthony J. Baugh has refused to sign the declaration and cannot be reached. Specifically, petitioners have shown, via the statement of petitioner's registered patent attorney Richard S. MacMillan that a copy of the application papers was sent on several occasions to the last known addresses of the non-signing joint inventor. The non-signing inventor informed counsel during a telephone call that the application papers had been misplaced. A subsequent set of application papers, states counsel, was returned as undeliverable by was returned as undeliverable by Federal Express.

This application and papers have been reviewed and found in compliance with 37 CFR 1.47(a). This application is hereby accorded Rule 1.47(a) status.

---

[1]A grantable petition under 37 CFR 1.47(a) requires:

(1) proof that the non-signing inventor cannot be reached or refuses to sign the oath or declaration after having been presented with the application papers (specification, claims and drawings);

(2) an acceptable oath or declaration in compliance with 35 U.S.C. §§ 115 and 116;

(3) the petition fee; and

(4) a statement of the last known address of the non-signing inventor.

As provided in Rule 1.47(c), this Office will forward notice of this application's filing to the non-signing inventor at the address given in the Declaration. Notice of the filing of this application will also be published in the Official Gazette.

The application is being forwarded to Technology Center 2100 for examination in due course.

Telephone inquiries related to this decision should be directed to the undersigned at 703-308-6918.

D Wood

Douglas I. Wood
Senior Petitions Attorney
Office of Petitions

UNITED STATES PATENT AND TRADEMARK OFFICE

Commissioner for Patents
United States Patent and Trademark Office
P.O. Box 1450
Alexandria, VA 22313-1450
www.uspto.gov
DIW 07-04

Anthony J. Baugh
9326 Soaring Hill Place
Ft. Wayne IN 46804

COPY MAILED
JUL 1 9 2004
OFFICE OF PETITIONS

In re Application of
Joder et al.
Application No. 10/623,478
Filed: 18 July, 2003
For: Method, Appratus, and System for Quality Performance Evaluation of a Supplier Base

Dear Mr. Baugh:

You are named as a joint inventor in the above identified United States patent application, filed under the provisions of 35 U.S.C. 116 (United States Code), and 37 CFR 1.47(a), Rules of Practice in Patent Cases. Should a patent be granted on the application you will be designated therein as a joint inventor.

As a named inventor you are entitled to inspect any paper in the file wrapper of the application, order copies of all or any part thereof (at a prepaid cost per 37 CFR 1.19) or make your position of record in the application. Alternatively, you may arrange to do any of the preceding through a registered patent attorney or agent presenting written authorization from you. If you care to join the application, counsel of record (see below) would presumably assist you. Joining in the application would entail the filing of an appropriate oath or declaration by you pursuant to 37 CFR 1.63.

Telephone inquiries regarding this communication should be directed to the undersigned at 703/308-6918. Requests for information regarding your application should be directed to the File Information Unit at 703/308-2733. Information regarding how to pay for and order a copy of the application, or a specific paper in the application, should be directed to Certification Division at 703/308-9726 or 1-800-972-6382 (outside the Washington D.C. area).

D Wood

Douglas I. Wood
Senior Petitions Attorney
Office of Petitions

RICHARD S. MACMILLAN
MACMILLAN, SOBANSKI & TODD, LLC
ONE MARITIME PLAZA, FOURTH FLOOR
720 WATER STREET
TOLEDO OH 43604

UNITED STATES PATENT AND TRADEMARK OFFICE

Commissioner for Patents
United States Patent and Trademark Office
P.O. Box 1450
Alexandria, VA 22313-1450
www.uspto.gov

TOWNSEND AND TOWNSEND AND CREW, LLP
TWO EMBARCADERO CENTER
EIGHTH FLOOR
SAN FRANCISCO CA 94111-3834

**COPY MAILED**

DEC 2 3 2005

**OFFICE OF PETITIONS**

In re Application of :
Cory M. Panattoni :
Application No. 10/623,480 :
Filed: July 18, 2003 :
Attorney Docket No. 002558-068710US :

ON PETITION

This is a decision on the petition filed October 13, 2005 under 37 CFR 1.137(b),[1] to revive the above-identified application.

The petition under 37 CFR 1.137 (b) is **GRANTED**.

This application became abandoned September 1, 2005 for failure to timely pay the issue fee on or before August 31, 2005. Accordingly, a Notice of Abandonment was mailed September 28, 2005.

The issue fee and petition fee have been applied. All other requirements of 37 CFR 1.137(b) having now been met, this matter is being referred to the Publishing Division to be processed into a patent.

Telephone inquiries concerning this matter may be directed to the undersigned Petitions Attorney at (571) 272-3212.

Patricia Faison-Ball

Patricia Faison-Ball
Senior Petitions Attorney
Office of Petitions

---

[1] Effective December 1, 1997, the provisions of 37 CFR 1.137(b) now provide that where the delay in reply was unintentional, a petition may be filed to revive an abandoned application or a lapsed patent pursuant to 37 CFR 1.137(b). A grantable petition filed under the provisions of 37 CFR 1.137(b) must be accompanied by:

(1) the required reply, unless previously filed. In a nonprovisional application abandoned for failure to prosecute, the required reply may be met by the filing of a continuing application. In a nonprovisional application filed on or after June 8, 1995, and abandoned for failure to prosecute, the required reply may also be met by the filing of a request for continued examination in compliance with § 1.114. In an application or patent, abandoned or lapsed for failure to pay the issue fee or any portion thereof, the required reply must be the payment of the issue fee or any outstanding balance thereof.

(2) the petition fee as set forth in 37 CFR 1.17(m);

(3) a statement that the entire delay in filing the required reply from the due date for the reply until the filing of a grantable petition pursuant to 37 CFR 1.137(b) was unintentional. The Commissioner may required additional information where there is a question whether the delay was unintentional; and

(4) any terminal disclaimer (and fee as set forth in 37 CFR 1.20(d)) required pursuant to 37 CFR 1.137(c)).

## SPE RESPONSE FOR CERTIFICATE OF CORRECTION

Paper No.: _____

DATE : 05/25/06

TO SPE OF : ART UNIT 2837

SUBJECT : Request for Certificate of Correction for Appl. No.: **10/623509** Patent No.: **6949899**

Please respond to this request for a certificate of correction within 7 days.

Please review the requested changes/corrections as shown in the **COCIN** document(s) in the IFW application image. No new matter should be introduced, nor should the scope or meaning of the claims be changed.

Please complete the response (see below) and forward the completed response to scanning using document code **COCX**.

***Angela Green***

**Certificates of Correction Branch**

**703-308-9390 ext. 123**

**Thank You For Your Assistance**

**The request for issuing the above-identified correction(s) is hereby:**

Note your decision on the appropriate box.

- ☒ **Approved** — **All** changes apply.
- ☐ **Approved in Part** — Specify below which changes **do not** apply.
- ☐ **Denied** — State the reasons for denial below.

**Comments:** _____

_____

_____

_____

_____

**SPE** **Art Unit** 2837

Ex L. Nguyen

## SPE RESPONSE FOR CERTIFICATE OF CORRECTION

Paper No.: _____

DATE : 5/3/06

TO SPE OF : ART UNIT 2861

SUBJECT : Request for Certificate of Correction for Appl. No.: 10/623,543 Patent No.: 6896348

Please respond to this request for a certificate of correction within 7 days.

Please review the requested changes/corrections as shown in the **COCIN** document(s) in the IFW application image. No new matter should be introduced, nor should the scope or meaning of the claims be changed.

Please complete the response (see below) and forward the completed response to scanning using document code **COCX**.


**Lamonte M. Newsome**
**Certificates of Correction Branch**
**703-308-9390 ext. 112**


**Thank You For Your Assistance**

**The request for issuing the above-identified correction(s) is hereby:**

Note your decision on the appropriate box.

- ☑ **Approved** — All changes apply.
- ☐ **Approved in Part** — Specify below which changes **do not** apply.
- ☐ **Denied** — State the reasons for denial below.

**Comments:** _____

SPE

2861
Art Unit

UNITED STATES PATENT AND TRADEMARK OFFICE

Commissioner for Patents
United States Patent and Trademark Office
P.O. Box 1450
Alexandria, VA 22313-1450
www.uspto.gov

SEED INTELLECTUAL PROPERTY LAW GROUP PLLC
701 FIFTH AVE
SUITE 5400
SEATTLE WA 98104

**COPY MAILED**

AUG 22 2007

**OFFICE OF PETITIONS**

In re Application of
Kim
Application No. 10/623,567
Filed: July 22, 2003
Attorney Docket No. 120161.402

DECISION ON PETITION

This is a decision on the petition under 37 CFR §1.137(b), filed May 4, 2007 to revive the above-identified application.

This application became abandoned for failure to timely submit corrected drawings, as required by the Notice of Allowability which was mailed December 20, 2006 and set a 3 month period for reply. Extensions of time were not available under 37 CFR §1.136(a). Accordingly, this application became abandoned on March 21, 2007. A Notice of Abandonment was mailed on April 25, 2007.

The requirements for a grantable petition under 37 CFR §1.137(b) have been met. This petition is hereby **Granted**.

It is not apparent whether the person signing the statement of unintentional delay was in a position to have firsthand or direct knowledge of the facts and circumstances of the delay at issue. Nevertheless, such statement is being treated as having been made as the result of a reasonable inquiry into the facts and circumstances of such delay. See 37 CFR 10.18(b). In the event that such an inquiry has not been made, petitioner must make such an inquiry. If such inquiry results in the discovery that it is not correct that the entire delay in filing the required reply from the due date for the reply until the filing of a grantable petition pursuant to 37 CFR 1.137(b) was unintentional, petitioner must notify the Office

The Office acknowledges receipt of corrected drawings submitted with the instant petition.

This application is being forwarded to the Office of Patent Publication for processing into a

patent.

Telephone inquiries concerning this matter should be directed to the undersigned at (571) 272-3215.

Charlema R. Grant

Charlema R. Grant
Petition Attorney
Office of Petitions

UNITED STATES PATENT AND TRADEMARK OFFICE

COMMISSIONER FOR PATENTS
UNITED STATES PATENT AND TRADEMARK OFFICE
P.O. BOX 1450
ALEXANDRIA, VA 22313-1450
www.uspto.gov

WILMER CUTLER PICKERING HALE AND DORR LLP
1875 PENNSYLVANIA AVE., NW
WASHINGTON DC 20004

**COPY MAILED**

MAY 10 2006

**OFFICE OF PETITIONS**

Applicant: Pratt
Appl. No.: 10/623,577
Filing Date: July 22, 2004
Title: LIQUID DOSAGE FORMULATIONS OF DONEPEZIL
Attorney Docket No.: 61368-223339
Pub. No.: US 2004/0214863 A1
Pub. Date: October 28, 2004

This is a decision on the request for a corrected patent application publication under 37 CFR 1.221, filed on March 24, 2006, for the above-identified application.

The request is DISMISSED.

The instant request is that the application be republished because the patent application publication contains the contents of another application.

37 CFR 1.221 (b) is applicable "only when the Office makes a material mistake which is apparent from Office records.... Any request for a corrected publication or revised patent application publication other than provided as provided in paragraph (a) of this section must be filed within two months from the date of the patent application publication. This period is not extendable." A material mistake must affect the public's ability to appreciate the technical disclosure of the patent application publication, to determine the scope of the patent application publication, or to determine the scope of the provisional rights that an applicant may seek to enforce upon issuance of a patent. [1]

The request for corrected publication received on March 24, 2006, was not timely filed under 37 CFR 1.221(b).

Due to the nature of the errors in this publication, the office will *sua sponte* publish a corrected patent application publication. The corrected patent application publication will be published in due course, unless the application is allowed and the patent issues before the application is republished.

[1] Changes to Implement Eighteen-Month Publication of Patent Applications, 65 FR 57023, 57038 (Sept. 20, 2000), 1239, Off. Gaz. Pat. Office Notices 63, 75 (Oct. 10, 2000) (final rule).

The documents scanned on September 4, 2003, which were improperly indexed as specification, claims and drawings and published have been relabeled as a foreign reference.

Inquiries relating to this matter may be directed to Mark Polutta at (571) 272-7709 (voice).

Mark O. Polutta
Office of Patent Legal Administration
Office of the Deputy Commissioner
for Patent Examination Policy

Enclosure: Corrected Filing Receipt

UNITED STATES PATENT AND TRADEMARK OFFICE

Commissioner for Patents
United States Patent and Trademark Office
P.O. Box 1450
Alexandria, VA 22313-1450
www.uspto.gov

FISH & RICHARDSON PC
P O BOX 1022
MINNEAPOLIS, MN 55440-1022

COPY MAILED
MAY 0 3 2006
OFFICE OF PETITIONS

| | |
|---|---|
| In re Application of | : |
| Isamu Kobori et al | : |
| Application No. 10/623,581 | : DECISION GRANTING PETITION |
| Filed: July 22, 2003 | : UNDER 37 CFR 1.313(c)(2) |
| Attorney Docket No. 07977-024003 | : |

This is a decision on the petition, filed May 2, 2006, under 37 CFR 1.313(c)(2) to withdraw the above-identified application from issue after payment of the issue fee.

The petition is **GRANTED**.

The above-identified application is withdrawn from issue for consideration of a submission under 37 CFR 1.114 (request for continued examination). See 37 CFR 1.313(c)(2).

***Petitioner is advised that the issue fee paid on March 14, 2006 in the above-identified application cannot be refunded. If, however, the above-identified application is again allowed, petitioner may request that it be applied towards the issue fee required by the new Notice of Allowance.***[1]

Telephone inquiries should be directed to the undersigned at (571) 272-3218.

This matter is being referred to Technology Center AU 2812 for processing of the request for continued examination under 37 CFR 1.114 and for consideration of the Information Disclosure Statement.

Frances Hicks
Petitions Examiner
Office of Petitions

C:\Documents and Settings\FHicks\My Documents\470\may9\623581.wpd

---

[1] *The request to apply the issue fee to the new Notice may be satisfied by completing and returning the new Part B – Fee(s) Transmittal Form (along with any balance due at the time of submission), which includes the following language thereon: "The Director of the USPTO is requested to apply the Issue Fee and Publication Fee (if any) or to re-apply any previously paid issue fee in the application identified above. Petitioner is advised that, whether a fee is indicated as being due or not, the Issue Fee Transmittal Form* ***must*** *be completed and timely submitted to avoid abandonment. Note the language in bold text on the first page of the Notice of Allowance and Fee(s) Due (PTOL-85).*

UNITED STATES PATENT AND TRADEMARK OFFICE

UNITED STATES DEPARTMENT OF COMMERCE
United States Patent and Trademark Office
Address: COMMISSIONER FOR PATENTS
P.O. Box 1450
Alexandria, Virginia 22313-1450
www.uspto.gov

DICKSTEIN SHAPIRO LLP
1825 EYE STREET NW
Washington, DC 20006-5403

Mail Date: 04/21/2010

| | | |
|---|---|---|
| **Applicant** | : Haike Guan | : DECISION ON REQUEST FOR |
| **Patent Number** | : 7580159 | : RECALCULATION of PATENT |
| **Issue Date** | : 08/25/2009 | : TERM ADJUSTMENT IN VIEW |
| **Appliction No** | : 10/623,603 | : OF WYETH AND NOTICE OF INTENT TO |
| **Filed** | : 07/22/2003 | : ISSUE CERTIFICATE OF CORRECTION |
| | | : |

The Request for Recalculation is **GRANTED** to the extent indicated.

The patent term adjustment has been determined to be **1798** days. The USPTO will *sua sponte* issue a certificate of correction reflecting the amount of PTA days determined by the recalculation.

Prior to the issuance of the certificate of correction, the USPTO will afford patentee an opportunity to be heard and request reconsideration. Accordingly, patentee has **one month or thirty (30) days**, whichever is longer, to file a request for reconsideration of this patent term adjustment calculation. See 35 U.S.C. 154(b)(3)(B)(ii) and 37 CFR 1.322(a)(4). No extensions of time will be granted under 37 CFR 1.136.

Patentee should use document code PET.OP if electronically filing a request for reconsideration of this patent term adjustment calculation. The patentee must also include the information required by 37 CFR 1.705(b)(2) and the fee required by 37 CFR 1.18(e). If patentee does not file a timely request for reconsideration of this patent term adjustment calculation including the information required by 37 CFR 1.705(b)(2) and the fee required by 37 CFR 1.18(e), the USPTO will issue a certificate of correction reflecting the PTA determination noted above.

Patentee should be aware that in order to preserve the right to review in the United States District Court for the District of Columbia of the USPTO patent term adjustment determination, patentee must ensure that he or she also take the steps required under 35 U.S.C. 154(b)(4)(A) in a timely manner. Nothing in the request for recalculation should be construed as providing an alternative time frame for commencing a civil action under 35 U.S.C. 154(b)(4)(A).

Any questions concerning this decision should be directed to the Office of Patent Legal Administration at 571-272-7702.

UNITED STATES PATENT AND TRADEMARK OFFICE

Commissioner for Patents
United States Patent and Trademark Office
P.O. Box 1450
Alexandria, VA 22313-1450
www.uspto.gov

BUCHANAN, INGERSOLL & ROONEY PC
POST OFFICE BOX 1404
ALEXANDRIA VA 22313-1404

**COPY MAILED**

JUN 15 2007

**OFFICE OF PETITIONS**

In re Patent No. 6876299 :
Issue Date: 04/05/2005 :
Application No. 10/623622 : DECISION ON PETITION
Filed: 07/22/2003 :
Attorney Docket No. 000409-046 :

This is a decision on the petition styled under 37 CFR 1.182 which is treated as a petition under 37 CFR 1.181 (no fee), filed on 8 February, 2007, requesting issuance of a duplicate Letters Patent for the above-identified patent.

The petition is **GRANTED**.

Petitioner states that the original Letters Patent was never received.

The required showing to establish nonreceipt of an Office communication must include a statement from the practitioner stating that the Office communication (in this case, the original Letters Patent) was not received by the practitioner and attesting to the fact that a search of the file jacket and docket records indicates that the Letters Patent was not received. A copy of the docket record where the nonreceived Letters Patent would have been entered had it been received and docketed must be attached to and referenced in practitioner's statement. *See* MPEP § 711.03(c) and 1156 Official Gazette 53 (November 16, 1993).

The petition is accompanied by the evidence required to establish nonreceipt of the original Letters patent. Accordingly, Publishing Division is directed to issue a duplicate Letters Patent.

The petition fee will be refunded.

Telephone inquiries concerning this decision may be directed to the undersigned at (571) 272-3231. Inquiries regarding the issuance of a duplicate Letters Patent may be directed to Krystal Paige in the Publishing Division at (703) 308-9250, Ext. 139.

A copy of this decision is being faxed to Publishing Division for issuance of a duplicate Letters Patent.

D Wood

Douglas I. Wood
Senior Petitions Attorney
Office of Petitions

cc: Krystal Paige, South Tower, 8th Floor (Fax No. (571) 270-9937

UNITED STATES PATENT AND TRADEMARK OFFICE

UNITED STATES DEPARTMENT OF COMMERCE
United States Patent and Trademark Office
Address: COMMISSIONER FOR PATENTS
P.O. Box 1450
Alexandria, Virginia 22313-1450
www.uspto.gov

WOOD, PHILLIPS, KATZ, CLARK & MORTIMER
500 W. MADISON STREET
SUITE 3800
CHICAGO, IL 60661

Mail Date: 04/21/2010

| | | |
|---|---|---|
| **Applicant** | : Edward J. McGunn | : DECISION ON REQUEST FOR |
| **Patent Number** | : 7591361 | : RECALCULATION of PATENT |
| **Issue Date** | : 09/22/2009 | : TERM ADJUSTMENT IN VIEW |
| **Appliction No** | : 10/623,624 | : OF WYETH AND NOTICE OF INTENT TO |
| **Filed** | : 07/21/2003 | : ISSUE CERTIFICATE OF CORRECTION |
| | | : |

The Request for Recalculation is **GRANTED** to the extent indicated.

The patent term adjustment has been determined to be **1031** days. The USPTO will *sua sponte* issue a certificate of correction reflecting the amount of PTA days determined by the recalculation.

Prior to the issuance of the certificate of correction, the USPTO will afford patentee an opportunity to be heard and request reconsideration. Accordingly, patentee has **one month or thirty (30) days**, whichever is longer, to file a request for reconsideration of this patent term adjustment calculation. See 35 U.S.C. 154(b)(3)(B)(ii) and 37 CFR 1.322(a)(4). No extensions of time will be granted under 37 CFR 1.136.

Patentee should use document code PET.OP if electronically filing a request for reconsideration of this patent term adjustment calculation. The patentee must also include the information required by 37 CFR 1.705(b)(2) and the fee required by 37 CFR 1.18(e). If patentee does not file a timely request for reconsideration of this patent term adjustment calculation including the information required by 37 CFR 1.705(b)(2) and the fee required by 37 CFR 1.18(e), the USPTO will issue a certificate of correction reflecting the PTA determination noted above.

Patentee should be aware that in order to preserve the right to review in the United States District Court for the District of Columbia of the USPTO patent term adjustment determination, patentee must ensure that he or she also take the steps required under 35 U.S.C. 154(b)(4)(A) in a timely manner. Nothing in the request for recalculation should be construed as providing an alternative time frame for commencing a civil action under 35 U.S.C. 154(b)(4)(A).

Any questions concerning this decision should be directed to the Office of Patent Legal Administration at 571-272-7702.

UNITED STATES PATENT AND TRADEMARK OFFICE

COMMISSIONER FOR PATENTS
UNITED STATES PATENT AND TRADEMARK OFFICE
P.O. BOX 1450
ALEXANDRIA, VA 22313-1450
www.uspto.gov

ROSENBERG, KLEIN & LEE
3458 ELLICOTT CENTER DRIVE-SUITE 101
ELLICOTT CITY MD 21043

COPY MAILED

APR 22 2004

OFFICE OF PETITIONS

In re Application of
Muh-Rong Wang
Application No. 10/623,633
Filed: July 22, 2003
Attorney's Docket No. MR1917-129

ON PETITION

This is a decision on the petition styled under 37 CFR 1.181 and filed December 18, 2003, which is treated as a petition under 37 CFR 1.182, requesting that the Notice of Omitted Item(s) in a Nonprovisional Application, "Notice", mailed November 28, 2003, be withdrawn.

The petition is **GRANTED**.

The application was filed July 22, 2003. However, on November 28, 2003, the Office of Initial Patent Examination mailed a "Notice" stating, that the application had been accorded a filing date but that Figures 3-4, as described in the specification, appeared to have been omitted.

In response, on December 18, 2003, the present petition was filed. Petitioners argue that six sheets of drawings were filed upon application and that Figures 3 -4 were included with the other application papers filed on July 22, 2003.

Upon a review of the application file, Figures 3-4 have been located among the application papers filed on July 22, 2003.

The petition is **GRANTED**. The "Notice" mailed November 28, 2003 is vacated.

In view of the above, no petition fee is necessary and none has been charged.

The application is being forwarded to the Office of Initial Patent Examination for further processing.

Telephone inquiries related to this decision should be directed to the undersigned Petitions Attorney at (703) 305-4497.

Patricia Faison-Ball

Patricia Faison-Ball
Senior Petitions Attorney
Office of Petitions

UNITED STATES PATENT AND TRADEMARK OFFICE

Commissioner for Patents
United States Patent and Trademark Office
P.O. Box 1450
Alexandria, VA 22313-1450
www.uspto.gov

ALEX NICOLAESCU
Ericsson Canada Inc.
Patent Department (LMC/M/P)
8400 Decarie Blvd.
Town Mount Royal QC H4P 2N2 CA CANADA

COPY MAILED

OCT 09 2007

OFFICE OF PETITIONS

In re Application of :
Joong et al. :
Application No. 10/623,638 : DECISION ON PETITION
Filed: 07/22/2003 :
Attorney Docket No. P17370US2 :

This is a decision on the petition filed September 10, 2007, to withdraw the holding of abandonment for the above-identified application.

On February 8, 2007, the Office mailed a nonfinal Office Action, which set a three-month shortened statutory period for reply. In the absence of a timely filed response, the application was held abandoned on May 9, 2007. A Notice of Abandonment was mailed on August 22, 2007.

In the present petition, the practitioner requested that the Office withdraw the holding of abandonment due to non-receipt of the nonfinal Office Action.

**PETITION TO WITHDRAW THE HOLDING OF ABANDONMENT**

A review of the record indicates no irregularity in the mailing of the nonfinal Office Action, and in the absence of any irregularity in the mailing, there is a strong presumption that the nonfinal Office Action was properly mailed to the address of record. This presumption may be overcome by a showing that the nonfinal Office action was not in fact received. The showing required to establish non-receipt of an Office communication must include a statement from the practitioner, stating that the practitioner did not receive the Office communication and attesting to the fact that a search of the file jacket and docket records indicates that the Office communication was not received. A copy of the docket record where the non-received Office communication would have been entered had it been received and docketed must be attached to and referenced in practitioner's statement. See MPEP 711.03(c)(I)(A). For example, if a three-month period for reply was set in the non-received Office communication, a copy of the docket report showing all replies docketed for a date three months from the mail date of the non-received Office communication must be submitted as documentary proof of non-receipt of the Office communication. The showing outlined above may not be sufficient if there are circumstances

that point to a conclusion that the Office communication may have been lost after receipt rather than a conclusion that the Office communication was lost in the mail (*e.g.* if the practitioner has a history of not receiving Office communications).

After reviewing the documents submitted on petition, the Office concludes that the showing of record is sufficient to warrant withdrawal of the holding of abandonment. The practitioner for applicants submitted copies of docket records where the nonfinal Office Action would have been entered had it been received and docketed. The practitioner attested to the fact that a search of the file jacket and docket records indicated that the nonfinal Office Action was not received. Accordingly, applicants presented the required showing under 37 CFR 1.181.

The petition under 37 CFR 1.181 is **GRANTED**. No petition fee is required.

Technology Center Art Unit 2132 has been advised of this decision. The matter is being referred to the Technology Center's technical support staff for mailing of a new nonfinal Office action. The three (3) month shortened statutory time period for responding to the nonfinal Office action will be set to run from the mailing date of the new nonfinal Office action.

Telephone inquiries related to this decision may be directed to the undersigned at (571) 272-3211.

Christina Tartera Donnell

Christina Tartera Donnell
Senior Petitions Attorney
Office of Petitions

UNITED STATES PATENT AND TRADEMARK OFFICE

Commissioner for Patents
United States Patent and Trademark Office
P.O. Box 1450
Alexandria, VA 22313-1450
www.uspto.gov

Samuel W. Apicelli, Esquire
Duane Morris LLP
305 North Front Street
P.O. Box 1003
Harrisburg PA 17108-1003

COPY MAILED

MAY 2 0 2004

OFFICE OF PETITIONS

In re Application of
ENEVOLDSEN, PER A.
Application No. 10/623,641
Filed: July 21, 2003
For: NECKLACES AND BRACELETS WITH KEEPERS

: Three
: Week
: Letter

A petition for access under 37 CFR 1.14(a)(1) and (h) was filed by Chris Caseiro on behalf of Chamilia, LLC. for access to the above-identified application on April 21, 2004, with proof of service on a Mr. Michael Lund.

Mr. Samuel Apicelli stated to Michael L. Lewis of this Office that he is uncertain if he received a complete copy of the petition and attachments from Mr. Lund and requested a copy of the petition and attachments filed with the Office. Accordingly, a copy of the petition papers filed April 21, 2004 is enclosed.

A member of the public may be entitled to access if "special circumstances" are shown which warrant a grant of access under 35 U.S.C. § 122. See Manual of Patent Examining Procedure (MPEP), Section 103. Assuming, arguendo, that Pandora or its related businesses has filed such an application, the use of such application to interfere with the business of others may be such special circumstances. Ex parte Bonnie-B Co. Inc., 1923 C.D. 42; In re Application for Trimless Cabinets, 128 USPQ 95 (Comm'r Pats. 1960); and In re Crossman, Kenrick, and LeMieux, 187 USPQ 367 (PTO Sol. 1975).

Petitioner states that access should be granted to the above-identified application because of alleged interference in their business which they believe constitutes special circumstances. Several incidents of the alleged interference are described in the petition. The petition has two pages of Pandora ads which contain the phrase "patent pending" as well as declarations by Lisa Whirlow and Kathy Riley to support the allegation of interference.

Petitioner requests that the Pandora patent(s) and/or application(s) be identified and access to the any unpublished applications be granted to review the rights claimed and minimize the harm to its business.

Applicants are hereby given THREE WEEKS from the date of this letter to file a response to this letter. Applicant is requested to confirm the identity of the application(s) with the subject matter of the petition together with any response opposing or permitting access. If applicant fails to respond within the three week period, petitioner may be allowed access to the entire application.

Any correspondence with respect to this matter should be addressed as follows:

By mail: Mail Stop Petition
Commissioner for Patents
P.O. Box 1450
Alexandria, Virginia

By FAX: (703) 872-9306
Attn: Office Patent Legal Administration/Michael L. Lewis

Telephone inquiries should be directed to Michael L. Lewis at (703) 306-5585.

Karin Ferriter
Senior Legal Advisor
Office of Patent Legal Administration
Office of the Deputy Commissioner
for Patent Examination Policy

Attachment: Petition filed April 21, 2004

UNITED STATES PATENT AND TRADEMARK OFFICE

COMMISSIONER FOR PATENTS
UNITED STATES PATENT AND TRADEMARK OFFICE
P.O. BOX 1450
ALEXANDRIA, VA 22313-1450
www.uspto.gov

DEC 27 2004

Samuel W. Apicelli, Esquire
Duane Morris LLP
305 North Front Street
P.O. Box 1003
Harrisburg, PA

MAILED
DEC 27 2004
OFFICE OF THE DIRECTOR
TC 3600

In re application of
Per A. Enevoldsen
Application No. 10/623,641
Filed: July 21, 2003
For: NECKLACES AND BRACELETS WITH KEEPERS

**DECISION ON REQUEST FOR WITHDRAWAL OF ATTORNEY**

This is a decision on the request filed on September 13, 2004 under 37 CFR 1.36 and MPEP 402.06, requesting permission to withdraw as the attorney of record in the above-identified application.

The request is **NOT APPROVED**.

Under 37 CFR 1.36 an attorney may withdraw only upon application to and approval by the Commissioner. It should be noted that a withdrawal is effective when approved, not when filed. Besides giving due notice to his or her client and delivering to the client all papers and property to which the client is entitled as specified under 37 CFR 10.40, approval of such a request requires that the following conditions be met:

A) Each attorney of record must sign the notice of withdrawal, or the notice must contain a clear indication of one attorney signing on behalf of another, because the Office does not recognize law firms;

B) A proper reason for the withdrawal as enumerated in 37 CFR 10.40(b) or subsection (1)-(6) of 37 CFR 10.40(c) must be provided; and

C) If withdrawal is requested in accordance with 37 CFR 10.40(c) above, there must be at least 30 days between approval of the withdrawal and the later of the expiration date of a time period for reply or the expiration date of the period which can be obtained by a petition and fee for extension of time under 37 CFR 1.136(a).

The request to withdraw as attorney in the above-identified application is not approved because the request does not comply with item B) above.

In this regard, absent a proper statement submitted in accordance with 37 CFR 3.73(b) providing documentary evidence of a chain of title from the original owner to the assignee, or a statement specifying where this evidence is recorded in the Office (e.g., reel and frame number), the "client" referred to in 37 CFR 10.40 is seen as being the individual who conferred power upon the attorneys, in this case, Per A. Enevoldsen. Therefore, the stated reason for withdrawal "that the Assignee has chosen an alternate counsel", is improper because there is no evidence in the file record establishing the assignee as the "client". A proper reason for withdrawal as enumerated in 37 CFR 10.40(b) subsections (1)-(4) or subsections (1)-(6) of 37 CFR 10.40(c) must be provided.

Randolph A. Reese

Randolph A. Reese
Special Programs Examiner
Patent Technology Center 3600
(703) 308-2121

RAR/rwg: 10/21/04

CC:

William R. Hansen, Esq.
Lathrop & Gage
230 Park Avenue
New York, NY 10169

UNITED STATES PATENT AND TRADEMARK OFFICE

COMMISSIONER FOR PATENTS
UNITED STATES PATENT AND TRADEMARK OFFICE
P.O. BOX 1450
ALEXANDRIA, VA 22313-1450
www.uspto.gov

DEC 27 2004

MAILED

DEC 27 2004
OFFICE OF THE DIRECTOR
TC 3600

Samuel W. Apicelli, Esquire
Duane Morris LLP
305 North Front Street
P.O. Box 1003
Harrisburg, PA 17108-1003

In re application of
Per A. Enevoldsen
Application No. 10/623,641
Filed: July 21, 2003
For: NECKLACES AND BRACELETS WITH KEEPERS

**DECISION ON PETITION TO MAKE SPECIAL (INFRINGEMENT)**

This is a decision on the petition under 37 C.F.R § 1.102(d) filed August 29, 2003 to make the above-identified application special.

The petition requests that the above-identified application be made special under the procedure set forth in M.P.E.P. § 708.02, item II: Infringement.

MPEP 708.02 states that a Petition to Make Special based on Infringement must have the following: (1) the appropriate petition fee under 37 CFR 1.17(h); (2) a statement by the assignee, applicant, or attorney alleging: (A) that there is an infringing device or product actually on the market or method in use; (B) that a rigid comparison of the alleged infringing device, product or method with the claims of the application has been made, and that, in his or her opinion, some of the claims are unquestionably infringed; and (C) that he or she has made a careful and thorough search of the prior art, or has good knowledge of the prior art, and has sent a copy of the references deemed most closely related to the subject matter encompassed by the claims.

The petition filed August 29, 2003 meets all of the requirements above and, therefore, the petition is **GRANTED**.

In compliance with element 2(C) above, an Information Disclosure Statement was filed on April 13, 2004.

The examiner is directed (1) to make an interference search for possible interfering applications; (2) to promptly examine this application out of turn; and (3) if any interfering application is discovered, to examine such application simultaneously and state in the first official letter of such application that it is being taken out of turn because of a possible interference.

Petitioner is advised that this application will continue to be special, throughout its entire prosecution and pendency, including interference and appeal, if any, only if petitioner makes a prompt *bona fide* effort, in response to each Office action, to place the application in condition for allowance, even if it is necessary to conduct an interview with the examiner to accomplish this purpose.

Randolph A. Reese
Special Programs Examiner
Technology Center 3600
(703) 308-2121

RAR/rwg: 10/21/04

CC:

William R. Hansen, Esq.
Lathrop & Gage
230 Park Avenue
New York, NY 10169

UNITED STATES PATENT AND TRADEMARK OFFICE

Commissioner for Patents
United States Patent and Trademark Office
P.O. Box 1450
Alexandria, VA 22313-1450
www.uspto.gov

Samuel W. Apicelli, Esq.
DUANE MORRIS, LLP
305 North Front Street
P.O. Box 1003
Harrisburg, PA 17108

(for patent owner)

COPY MAILED

MAR 20 2007

OFFICE OF PETITIONS

Roger C. Knapp, Esq.
SLATER & MATSIL, LLP
17950 Preston Rd. Suite 1000
Dallas, TX 75252

(for third party requester)

Applicant: Enevoldsen
Appl. No.: 10/623,641
Filing Date: July 21, 2003
U.S. Publication No.: US 2004/0144131 A1
Pub. Date: July 29, 2004
U.S. Patent No.: 7,007,507
Issue Date: March 7, 2006
Title: NECKLACES AND BRACELETS WITH KEEPERS
Attorney Docket No.: CHA-001

This decision is in response to the "Petition to Access a Pending Patent Application Under 37 C.F.R. 1.14" received on July 21, 2004 and applicant's paper in response "Response to Petition for Access Under 37 C.F.R. 1.14" received on June 9, 2004, for the above-identified application.

The petition is before the Office of Patent Legal Administration for decision.

The petition is **DISMISSED as moot.**

## DECISION

37 C.F.R. 1.11(a) Files Open to the Public states:

(a) The specification, drawings, and all papers relating to the file of: A published application; ***a patent;*** or a statutory invention registration *are open to inspection by the public, and copies may be obtained upon the payment of the fee set forth in § 1.19 (b)(2).* If an application was published in redacted form pursuant to § 1.217, the complete file wrapper and contents of the patent application will not be available if: The requirements of paragraphs (d)(1), (d)(2), and (d)(3) of § 1.217 have been met in the application; and the application is still pending.

Therefore, since the application has already issued as U.S. Patent 7,007,507 B2, published on March 7, 2009, the request is deemed moot.

## CONCLUSION

1. The petition is **DISMISSED as moot.**

2. Inquiries relating to this matter may be directed to Joseph F. Weiss, Jr. at (571) 272-7759.

HIRAM H. BERNSTEIN
Senior Legal Advisor
Office of Patent Legal Administration
Office of the Deputy Commissioner
for Patent Examination Policy

UNITED STATES PATENT AND TRADEMARK OFFICE

Commissioner for Patents
United States Patent and Trademark Office
P.O. Box 1450
Alexandria, VA 22313-1450
www.uspto.gov

**OLIFF & BERRIDGE**
**P.O. BOX 19928**
**ALEXANDRIA VA 22320**

COPY MAILED

AUG 1 1 2005

OFFICE OF PETITIONS

ON PETITION

| | | |
|---|---|---|
| In re Application of | : | |
| Ryuji Ishii | : | |
| Application No. 10/623,649 | : | |
| Filed: July 22, 2003 | : | |
| Attorney Docket No. 116645 | : | |

This is a decision on the petition, filed August 10, 2005, under 37 CFR 1.313(c)(2) to withdraw the above-identified application from issue after payment of the issue fee.

The petition is **GRANTED**.

The above-identified application is withdrawn from issue for consideration of a submission under 37 CFR 1.114 (request for continued examination). See 37 CFR 1.313(c)(2).

**Petitioner is advised that the issue fee paid on July 22, 2005 in the above-identified application cannot be refunded. If, however, the above-identified application is again allowed, petitioner may request that it be applied towards the issue fee required by the new Notice of Allowance.**[1]

Telephone inquiries should be directed to the undersigned at (571) 272-3208.

The examiner of Technology Center AU 2818 will consider the request for continued examination under 37 CFR 1.114.

Karen Creasy

Karen Creasy
Petitions Examiner
Office of Petitions
Office of the Deputy Commissioner
for Patent Examination Policy

---

[1] The request to apply the issue fee to the new Notice may be satisfied by completing and returning the new Issue Fee Transmittal Form PTOL-85(b), which includes the following language thereon: "Commissioner for Patents is requested to apply the Issue Fee and Publication Fee (if any) or re-apply any previously paid issue fee to the application identified above." Petitioner is advised that, whether a fee is indicated as being due or not, the Issue Fee Transmittal Form **must** be completed and timely submitted to avoid abandonment. Note the language in bold text on the first page of the Notice of Allowance and Fee(s) Due (PTOL-85).

UNITED STATES PATENT AND TRADEMARK OFFICE

Commissioner for Patents
United States Patent and Trademark Office
P.O. Box 1450
Alexandria, VA 22313-1450
www.uspto.gov

**FITCH EVEN TABIN & FLANNERY**
**120 SOUTH LASALLE STREET**
**SUITE 1600**
**CHICAGO IL 60603-3406**

COPY MAILED
MAR 15 2010

| | | |
|---|---|---|
| In re Application of | : | |
| James G. GATTO | : | |
| Application No. 10/623,656 | : | DECISION ON PETITION |
| Filed: July 22, 2003 | : | UNDER 37 CFR 1.78(a)(3) |
| Attorney Docket No. 94517 | : | |

This is a decision on the petition under 37 CFR 1.78(a)(3), filed December 02, 2009, to accept an unintentionally delayed claim under 35 U.S.C. § 120 for the benefit of priority to the prior-filed nonprovisional applications set forth in the amendment filed with the petition.

The petition is **GRANTED**.

A petition for acceptance of a claim for late priority under 37 CFR 1.78(a)(3) is only applicable to those applications filed on or after November 29, 2000. Further, the petition is appropriate only after the expiration of the period specified in 37 CFR 1.78(a)(2)(ii). In addition, the petition under 37 CFR 1.78(a)(3) must be accompanied by:

**(1)** the reference required by 35 U.S.C. § 120 and 37 CFR 1.78(a)(2)(i) of the prior-filed application, unless previously submitted;
**(2)** the surcharge set forth in § 1.17(t); and
**(3)** a statement that the entire delay between the date the claim was due under 37 CFR 1.78(a)(2)(ii) and the date the claim was filed was unintentional. The Director may require additional information where there is a question whether the delay was unintentional.

All of the above requirements having been satisfied, the late claim for priority under 35 U.S.C. § 120 is accepted as being unintentionally delayed.

***The granting of the petition to accept the delayed benefit claim to the prior-filed applications under 37 CFR 1.78(a)(3) should not be construed as meaning that this application is entitled to the benefit of the prior-filed applications. In order for this application to be entitled to the benefit of the prior-filed applications, all other requirements under 35 U.S.C. § 120 and 37 CFR 1.78(a)(1) and (a)(2) must be met. Similarly, the fact that the corrected Filing Receipt accompanying this decision on petition includes the prior-filed applications should not be construed as meaning that applicant is entitled to the claim for benefit of priority to the prior-filed applications noted thereon. Accordingly, the examiner will, in due course, consider this benefit claim and determine whether the application is entitled to the benefit of the earlier filing date.***

A corrected Filing Receipt, which includes the priority claim to the prior-filed nonprovisional applications, accompanies this decision on petition.

Any inquiries concerning this decision may be directed to Michelle R. Eason at (571) 272-4231. All other inquiries concerning either the examination procedures or status of the application should be directed to the Technology Center.

This application is being forwarded to Technology Center Art Unit 2887 for consideration by the examiner of applicant's entitlement to claim benefit of priority under 35 U.S.C. § 120 to the prior-filed applications.

Thurman K. Page
Petition Examiner
Office of Petitions

**ATTACHMENT**: Corrected Filing Receipt

UNITED STATES PATENT AND TRADEMARK OFFICE

UNITED STATES DEPARTMENT OF COMMERCE
United States Patent and Trademark Office
Address: COMMISSIONER FOR PATENTS
P.O. Box 1450
Alexandria, Virginia 22313-1450
www.uspto.gov

| APPLICATION NUMBER | FILING or 371(c) DATE | GRP ART UNIT | FIL FEE REC'D | ATTY.DOCKET.NO | TOT CLAIMS | IND CLAIMS |
|---|---|---|---|---|---|---|
| 10/623,656 | 07/22/2003 | 2887 | 780 | 94517 | 27 | 4 |

**CONFIRMATION NO. 4748**

**CORRECTED FILING RECEIPT**

22242
FITCH EVEN TABIN & FLANNERY
120 SOUTH LASALLE STREET
SUITE 1600
CHICAGO, IL 60603-3406

*OC000000040500936*

Date Mailed: 03/15/2010

Receipt is acknowledged of this non-provisional patent application. The application will be taken up for examination in due course. Applicant will be notified as to the results of the examination. Any correspondence concerning the application must include the following identification information: the U.S. APPLICATION NUMBER, FILING DATE, NAME OF APPLICANT, and TITLE OF INVENTION. Fees transmitted by check or draft are subject to collection. Please verify the accuracy of the data presented on this receipt. **If an error is noted on this Filing Receipt, please submit a written request for a Filing Receipt Correction. Please provide a copy of this Filing Receipt with the changes noted thereon. If you received a "Notice to File Missing Parts" for this application, please submit any corrections to this Filing Receipt with your reply to the Notice. When the USPTO processes the reply to the Notice, the USPTO will generate another Filing Receipt incorporating the requested corrections**

**Applicant(s)**

James G. Gatto, Great Falls, VA;

**Power of Attorney:** The patent practitioners associated with Customer Number 22242

**Domestic Priority data as claimed by applicant**

This application is a CON of 10/237,933 09/10/2002 PAT 6,796,492
which is a CON of 09/922,935 08/07/2001 PAT 7,661,590
which is a CON of 09/658,622 09/08/2000 ABN
which is a DIV of 08/670,599 06/26/1996 PAT 6,149,055
which is a CIP of 08/421,486 04/13/1995 PAT 5,546,523

**Foreign Applications**

**If Required, Foreign Filing License Granted:** 03/25/2004

The country code and number of your priority application, to be used for filing abroad under the Paris Convention, is **US 10/623,656**

**Projected Publication Date:** Not Applicable

**Non-Publication Request:** No

**Early Publication Request:** No

**Title**

ELECTRONIC FUND TRANSFER OR TRANSACTION SYSTEM

**Preliminary Class**

235

## PROTECTING YOUR INVENTION OUTSIDE THE UNITED STATES

Since the rights granted by a U.S. patent extend only throughout the territory of the United States and have no effect in a foreign country, an inventor who wishes patent protection in another country must apply for a patent in a specific country or in regional patent offices. Applicants may wish to consider the filing of an international application under the Patent Cooperation Treaty (PCT). An international (PCT) application generally has the same effect as a regular national patent application in each PCT-member country. The PCT process **simplifies** the filing of patent applications on the same invention in member countries, but **does not result** in a grant of "an international patent" and does not eliminate the need of applicants to file additional documents and fees in countries where patent protection is desired.

Almost every country has its own patent law, and a person desiring a patent in a particular country must make an application for patent in that country in accordance with its particular laws. Since the laws of many countries differ in various respects from the patent law of the United States, applicants are advised to seek guidance from specific foreign countries to ensure that patent rights are not lost prematurely.

Applicants also are advised that in the case of inventions made in the United States, the Director of the USPTO must issue a license before applicants can apply for a patent in a foreign country. The filing of a U.S. patent application serves as a request for a foreign filing license. The application's filing receipt contains further information and guidance as to the status of applicant's license for foreign filing.

Applicants may wish to consult the USPTO booklet, "General Information Concerning Patents" (specifically, the section entitled "Treaties and Foreign Patents") for more information on timeframes and deadlines for filing foreign patent applications. The guide is available either by contacting the USPTO Contact Center at 800-786-9199, or it can be viewed on the USPTO website at http://www.uspto.gov/web/offices/pac/doc/general/index.html.

For information on preventing theft of your intellectual property (patents, trademarks and copyrights), you may wish to consult the U.S. Government website, http://www.stopfakes.gov. Part of a Department of Commerce initiative, this website includes self-help "toolkits" giving innovators guidance on how to protect intellectual property in specific countries such as China, Korea and Mexico. For questions regarding patent enforcement issues, applicants may call the U.S. Government hotline at 1-866-999-HALT (1-866-999-4158).

## LICENSE FOR FOREIGN FILING UNDER

## Title 35, United States Code, Section 184

## Title 37, Code of Federal Regulations, 5.11 & 5.15

**GRANTED**

The applicant has been granted a license under 35 U.S.C. 184, if the phrase "IF REQUIRED, FOREIGN FILING LICENSE GRANTED" followed by a date appears on this form. Such licenses are issued in all applications where the conditions for issuance of a license have been met, regardless of whether or not a license may be required as

set forth in 37 CFR 5.15. The scope and limitations of this license are set forth in 37 CFR 5.15(a) unless an earlier license has been issued under 37 CFR 5.15(b). The license is subject to revocation upon written notification. The date indicated is the effective date of the license, unless an earlier license of similar scope has been granted under 37 CFR 5.13 or 5.14.

This license is to be retained by the licensee and may be used at any time on or after the effective date thereof unless it is revoked. This license is automatically transferred to any related applications(s) filed under 37 CFR 1.53(d). This license is not retroactive.

The grant of a license does not in any way lessen the responsibility of a licensee for the security of the subject matter as imposed by any Government contract or the provisions of existing laws relating to espionage and the national security or the export of technical data. Licensees should apprise themselves of current regulations especially with respect to certain countries, of other agencies, particularly the Office of Defense Trade Controls, Department of State (with respect to Arms, Munitions and Implements of War (22 CFR 121-128)); the Bureau of Industry and Security, Department of Commerce (15 CFR parts 730-774); the Office of Foreign AssetsControl, Department of Treasury (31 CFR Parts 500+) and the Department of Energy.

**NOT GRANTED**

No license under 35 U.S.C. 184 has been granted at this time, if the phrase "IF REQUIRED, FOREIGN FILING LICENSE GRANTED" DOES NOT appear on this form. Applicant may still petition for a license under 37 CFR 5.12, if a license is desired before the expiration of 6 months from the filing date of the application. If 6 months has lapsed from the filing date of this application and the licensee has not received any indication of a secrecy order under 35 U.S.C. 181, the licensee may foreign file the application pursuant to 37 CFR 5.15(b).

UNITED STATES PATENT AND TRADEMARK OFFICE

Commissioner for Patents
United States Patent and Trademark Office
P.O. Box 1450
Alexandria, VA 22313-1450
www.uspto.gov

MORRISON & FOERSTER LLP
1650 TYSONS BOULEVARD
SUITE 400
MCLEAN, VA 22102

MAILED

MAR 25 2009

OFFICE OF PETITIONS

| | | |
|---|---|---|
| In re Patent No. 7,478,809 | : | |
| Issue Date: January 20, 2009 | : | |
| Application No. 10/623,734 | : | ON PETITION |
| Filed: July 22, 2003 | : | |
| Attorney Docket No. 204552029100 | : | |

This is a decision on the petition filed January 22, 2009, which is being treated as a request under 37 CFR 3.81(b)[1] to correct the name of the assignee on the front page of the above-identified patent by way of a Certificate of Correction.

The request is **GRANTED**. The $130 petition fee was charged to counsel's deposit account as authorized.

While it is noted that the requirements of 37 CFR 3.81(b) were satisfied in the petition filed January 22, 2009, a decision on the petition was never rendered. However, on March 3, 2009, the Office issued the requested Certificate of Correction. Accordingly, the present petition is granted *nunc pro tunc*.

Telephone inquiries concerning this decision may be directed to the undersigned at (571) 272-3204.

Sherry D. Brinkley
Petitions Examiner
Office of Petitions

[1] *See* MPEP 1309, subsection II; and Official Gazette of June 22, 2004.

UNITED STATES PATENT AND TRADEMARK OFFICE

Commissioner for Patents
United States Patent and Trademark Office
P.O. Box 1450
Alexandria, VA 22313-1450
www.uspto.gov

MAILED

OCT 25 2004

DIRECTOR'S OFFICE
TECHNOLOGY CENTER 3600

Whiteford, Taylor & Preston, LLP
Attn: Gregory M. Stone
Seven Saint Paul Street
Baltimore, MD 21202-1626

In re application of:
Terry L. Rein Sr., et al.
Application No. 10/623,766
Filed: July 21, 2003
For: MINING DRILL STEELS

: **DECISION ON REQUEST**
: **FOR WITHDRAWAL OF**
: **ATTORNEY**

This is a decision on the request filed on April 29, 2004, under 37 CFR 1.36 and MPEP 402.06, requesting permission to withdraw as the attorney of record in the above-identified application.

The request is **NOT APPROVED**.

Under 37 CFR 1.36 an attorney may withdraw only upon application to and approval by the Commissioner. It should be noted that a withdrawal is effective when approved, not when filed. Besides giving due notice to his or her client and delivering to the client all papers and property to which the client is entitled as specified under 37 CFR 10.40, approval of such a request requires that the following conditions be met:

A) Each attorney of record must sign the notice of withdrawal, or the notice must contain a clear indication of one attorney signing on behalf of another, because the Office does not recognize law firms;

B) A proper reason for the withdrawal as enumerated in 37 CFR 10.40(b) or subsection (1)-(6) of 37 CFR 10.40(c) must be provided; and

C) If withdrawal is requested in accordance with 37 CFR 10.40(c) above, there must be at least 30 days between approval of the withdrawal and the later of the expiration date of a time period for reply or the expiration date of the period which can be obtained by a petition and fee for extension of time under 37 CFR 1.136(a).

The request to withdraw as attorney is not accepted in the above-identified application because the request lacks conditions A) and C) above.

As to condition A), the attorney Gregory M. Stone does not have power of attorney in this application. There is no record of power of attorney ever being given to the attorney making the request.

As to condition C) there is no longer 30 days for the applicant to respond to the outstanding Office action mailed April 26, 2004.

Steven N. Meyers
Special Programs Examiner
Patent Technology Center 3600
(703) 308-3868

SNM/dcg: 10/19/04

UNITED STATES PATENT AND TRADEMARK OFFICE

COMMISSIONER FOR PATENTS
UNITED STATES PATENT AND TRADEMARK OFFICE
P.O. BOX 1450
ALEXANDRIA, VA 22313-1450
www.uspto.gov

Paper No.

Wilson & Ham
PMB: 348 2530 Berryessa Road
San Jose, CA 95132

COPY MAILED

OCT 29 2004

OFFICE OF PETITIONS

| | | |
|---|---|---|
| In re Application of: | : | |
| Foote et al. | : | |
| Application No. 10/623,784 | : | DECISION GRANTING |
| Filed: July 21, 2003 | : | STATUS UNDER |
| Title of Invention: | : | |
| MULTIPROTOCOL LABEL SWITCHING | : | 37 CFR 1.47(a) |
| (MPLS) EDGE SERVICE EXTRACTION | : | |

This is in response to a petition under 37 CFR 1.47(a), filed December 22, 2003, to allow the other inventor(s) to proceed with the application on behalf of himself or herself and the nonsigning inventor(s).

The petition is **granted**.

The above-identified application and papers have been reviewed and found in compliance with 37 CFR 1.47(a). This application is hereby accorded Rule 1.47(a) status.

Petitioner has shown that the non-signing inventor, Kumar Muhta, refuses to join in the application.

As provided in Rule 1.47(a), this Office will forward notice of this application's filing to the non-signing inventor at the addresses given in the Petition. Notice of the filing of this application will also be published in the Official Gazette.

The application file is being returned to the Office of Initial Patent Examination for continued processing.

Telephone inquiries related to this decision may be directed to the undersigned at (571) 272-3232.

Derek L. Woods
Attorney Advisor
Office of Petitions

UNITED STATES PATENT AND TRADEMARK OFFICE

COMMISSIONER FOR PATENTS
UNITED STATES PATENT AND TRADEMARK OFFICE
P.O. BOX 1450
ALEXANDRIA, VA 22313-1450
www.uspto.gov

MAIL

NOV 02 2004

DIRECTOR OFFICE
TECHNOLOGY CENTER 2600

STEVENS DAVIS MILLER & MOSHER, LLP
1615 L STREET, NW
SUITE 850
WASHINGTON DC 20036

In re Application of :
Naoyasu MIYAGAWA, et al. :
Application No. 10/623,811 :
Filed: July 22, 2003 :
For: MULTICARRIER TRANSMISSION METHOD AND APPARATUS :

DECISION ON PETITION TO MAKE SPECIAL

This is a decision on the petition filed July 21, 2004 under Manual of Patent Examination Procedure §708.02, VIII requesting accelerated examination.

The petition under Manual of Patent Examination Procedure §708.02, VIII, must:
(1) be filed prior to receiving any examination by the examiner,
(2) be accompanied by the required fee- $130,
(3) the claims should be directed to a single invention (if it is determined that the claims pertain to more than one invention, then applicant will have to make an election without traverse or forfeit accelerated examination status),
(4) state that a pre-examination search was made, and fully discuss the search method employed, such as classes and subclasses searched, publications, Chemical abstracts, patents, etc. A search made by a foreign patent office satisfies this requirement,
(5) be accompanied by a copy of each of the references most closely related to the subject matter encompassed by the claims if said references are not already of record,
(6) fully discuss the references, pointing out with the particularity required by 37 C.F.R. §1.111 (b) and (c), how the claimed subject matter is patentable over the references.

The petition is **GRANTED**.

The application will retain its special status throughout its entire prosecution, including any appeal to the Board of Patent Appeals and Interferences, subject only to diligent prosecution by the applicant. The application file is being forwarded to the examiner for appropriate action in due course.

Kenneth A. Wieder
Special Program Examiner
Technology Center 2600
Communications

UNITED STATES PATENT AND TRADEMARK OFFICE

COMMISSIONER FOR PATENTS
UNITED STATES PATENT AND TRADEMARK OFFICE
P.O. BOX 1450
ALEXANDRIA, VA 22313-1450
www.uspto.gov

Paper No. 3

STEVENS, DAVIS, MILLER & MOSHER, LLP
1615 L STREET, NW, SUITE 850
PO BOX 34387
WASHINGTON, DC 20043-4387

COPY MAILED
NOV 05 2003
OFFICE OF PETITIONS

| | |
|---|---|
| In re Application of | : |
| Itahara et al. | : |
| Application No. 10/470,584 | : DECISION GRANTING PETITION |
| Filed: 22 July, 2003 | : |
| Attorney Docket No. L9289.03143 | : |

This is a decision on the petition styled as a petition requesting a serial number for an application, filed on 28 October, 2003, which is treated as a petition under 37 CFR 1.53(e) to accord the above-identified application a filing date of 22 July, 2003.

The petition is granted.

Petitioner asserts that the above-identified application was filed on 22 July, 2003, but was subsequently lost in the U.S. Patent and Trademark Office. In support, petitioner presents a return postcard bearing a USPTO "Office-date" stamp dated 22 July, 2003. The postcard itemizes the filing of, *inter alia*, 51 pages of specification, 10 claims, an abstract, and 23 sheets of drawings, and identifies the application by first named inventor's name, attorney docket number, and the attorney's law firm's name and address. The petition was also accompanied by two copies of 51 pages of written description, six (6) pages containing 10 claims, one (1) page of abstract, and 23 sheets of drawings. Petitioner requests that the application be accorded a filing date of 22 July, 2003, the date that the specification, claims, and drawings were filed in the USPTO.

In view of petitioners' postcard receipt, the evidence is convincing that the application papers deposited on 22 July, 2003, included, *inter alia*, 51 pages of written description, 10

Copied from 10470584 on 05/17/2005

claims, and 23 sheets of drawings, which were subsequently misplaced in the USPTO. Therefore, the application was complete on filing and entitled to a filing date of 23 July, 2003.

In view of the above, the petition is granted. No petition fee is due and none has been charged.

The application has been assigned Application No. 10/470,584. All future correspondence regarding this application should reference this number.

The application file is being forwarded to Office of Initial Patent Examination for further processing with a filing date of 22 July, 2003, using the copy of the specification, claims, and drawings supplied with the present petition.

Telephone inquiries specific to this matter should be directed to the undersigned at (703) 308-6918.

DWood

Douglas I. Wood
Senior Petitions Attorney
Office of Petitions

Copied from 10470584 on 05/17/2005

UNITED STATES PATENT AND TRADEMARK OFFICE

COMMISSIONER FOR PA
UNITED STATES PATENT AND TRADEMARK O
P.O. BOX
ALEXANDRIA, VA 22313
WWW.USP

Paper No.

**COPY MAILED**

DEC 23 2003

**OFFICE OF PETITIONS**

ADAM J. CERMAK
P.O. BOX 7518
ALEXANDRIA, VA 22307-7518

In re Application of
Flohr et al.
Application No. 10/623,812
Filed: July 22, 2003
Title: BURNER AND PILOT BURNER

DECISION ON PETITION

This is a decision on the "PETITION UNDER 37 C.F.R. § 1.182 FOR FILING DATE OF A NON-PROVISIONAL PATENT APPLICATION" filed November 12, 2003, requesting that the above-identified application be accorded a filing date of July 22, 2003.

The petition is **DISMISSED AS MOOT**.

On petition filed November 12, 2003, applicants assert that application papers in the above-identified application were filed in the United States Patent and Trademark Office on July 22, 2003. However, petitioner has not received a Official Filing Receipt (or other paper) acknowledging receipt of the application nor can applicants find this application within the PTO's PAIR system associated with the attorney of record's Customer Number.

Applicants are advised that the application papers originally filed on July 22, 2003 (which appear to correspond to the papers provided on petition) are of record in the Office, and are considered received in the Office on July 22, 2003. The papers of record have been assigned application No. 10/623,812. All further correspondence concerning this application should be directed to application No. 10/623,812.

Thus, the instant petition involves a moot issue.

Nonetheless, PALM records further indicate that on December 2, 2003, the date of drafting of this decision, the Office of Initial Patent Examination (OIPE) mailed a Notice advising applicants of the filing status of this application. Upon review of this notification, applicants may determine if the filing of a petition pursuant to § 1.53(e)(2) is necessary.

At this time, no petition fee is required and none has been charged.

Telephone inquiries concerning this matter may be directed to the undersigned at (703) 305-0309.

Nancy Johnson
Senior Petitions Attorney
Office of Petitions

UNITED STATES PATENT AND TRADEMARK OFFICE

COMMISSIONER FOR PATE
UNITED STATES PATENT AND TRADEMARK OFF
P.O. BOX 14
ALEXANDRIA, VA 22313-14
www.uspto

Paper No.

ADAM J. CERMAK
P.O. BOX 7518
ALEXANDRIA, VA 22307-7518

COPY MAILED

DEC 2 3 2003

OFFICE OF PETITIONS

In re Application of
Flohr et al.
Application No. 10/623,812
Filed: July 22, 2003
Title: BURNER AND PILOT BURNER

LETTER

This is in response to the "Request to Withdraw Petition as Moot" filed December 5, 2003, requesting that the PETITION UNDER 37 C.F.R. § 1.182 FOR FILING DATE OF A NON-PROVISIONAL PATENT APPLICATION" filed November 12, 2003 be withdrawn.

The request is **DENIED**.

Applicants request that the petition be withdrawn as moot in view of their receipt on December 2, 2003 of a filing receipt advising applicants of the filing date and application number of this application. Alternatively, applicants request that if a decision on the petition has been made that it be vacated as moot.

A decision on the prior petition has already been rendered (and is being forwarded to applicants under separate cover). The decision dismissed the petition as moot and advised applicants of the filing date and application number of the application consistent with the information provided on the December 2, 2003 filing receipt. The decision was made prior to applicants advising the Office of their knowledge of the filing date and application number. As such, the decision appropriately responded to the petition. It is inappropriate to render this decision moot due to the events occurring subsequent to its drafting.

Telephone inquiries concerning this communication may be directed to the undersigned at (703) 305-0309.

Nancy Johnson

Nancy Johnson
Senior Petitions Attorney
Office of Petitions

UNITED STATES PATENT AND TRADEMARK OFFICE

COMMISSIONER FOR PATENTS
UNITED STATES PATENT AND TRADEMARK OFFICE
P.O. BOX 1450
ALEXANDRIA, VA 22313-1450
www.uspto.gov

**DATE:** June 14, 2010
**TO:** Certificates of Correction Branch
**FROM:** Walter Benson
SPE, Art Unit 2837
**SUBJECT:** REQUEST FOR CERTIFICATE OF CORRECTION

Please issue a Certificate of Correction in U. S. Letters Patent No. 6,940,248 as specified on the attached Certificate.

/Walter Benson/
Walter Benson, SPE
Art Unit 2837

# UNITED STATES PATENT AND TRADEMARK OFFICE

# CERTIFICATE

Patent No. 6,940,248
Patented: September 6, 2005

On petition requesting issuance of a certificate for correction of inventorship pursuant to 35 U.S.C. 256, it has been found that the above identified patent, through error and without deceptive intent, improperly sets forth the inventorship. Accordingly, it is hereby certified that the correct inventorship of this patent is:

| | |
|---|---|
| ROBERT L. MARESA | Hopkinton, MA |
| THOMAS AHO | Hudson, MA |
| JAMES A. PARISON | New Ipswich, NH |

/Walter Benson/
Walter Benson
Supervisory Patent Examiner
Art Unit 2837

UNITED STATES PATENT AND TRADEMARK OFFICE

Commissioner for Patents
United States Patent and Trademark Office
P.O. Box 1450
Alexandria, VA 22313-1450
www.uspto.gov

JAMES D. HALL
BOTKIN & HALL, LLP
105 E. JEFFERSON BLVD.
SUITE 400
SOUTH BEND, IN 46601

**COPY MAILED**

AUG 3 1 2005

**OFFICE OF PETITIONS**

In re Application of :
Ching Cheng Chen :
Application No. 10/623,820 : DECISION ON PETITION UNDER
Application Filing Date: July 21, 2003 : 37 CFR 1.137(f)
Attorney Docket No. 270-004IQAMerica

This is a decision on the petition under 37 CFR 1.137(f), filed August 17, 2005, to revive the instant non-provisional application.

The petition under 37 CFR 1.137(f) is granted.

This application became abandoned pursuant to 35 U.S.C. § 122(b)(2)(B(iii) for failure to timely notify the Office of the filing of an application in a foreign country.

A petition under 37 CFR 1.137(f) must be accompanied by: (1) the reply which is met by the notification of such filing in a foreign country or under a multinational treaty[1]; (2) the petition fee as set forth in 37 CFR 1.17(m), and (3) a statement that the entire delay in filing the required reply from the due date of the reply until the filing of a grantable petition was unintentional. The Commissioner may require additional information where there is a question whether the delay was unintentional.

The instant petition is found in compliance with 37 CFR 1.137(f).

Accordingly, the failure to timely notify the Office of a foreign filing within 45 days as provided by 35 U.S.C. § 122(b)(2)(B)(iii) is accepted as having been unintentionally delayed.

Further inquiries regarding this decision may be directed to the undersigned at (571)272-3222.

Kenya A. McLaughlin
Petitions Attorney
Office of Petitions

[1] The filing of a petition under this section will not relieve applicant of his obligation to reply to any outstanding Office action.

UNITED STATES PATENT AND TRADEMARK OFFICE

COMMISSIONER FOR PATENTS
UNITED STATES PATENT AND TRADEMARK OFFICE
P.O. BOX 1450
ALEXANDRIA, VA 22313-1450
WWW.USPTO.GOV

Paper No. None

LERNER AND GREENBERG, PA
P O BOX 2480
HOLLYWOOD FL 33022-2480

**COPY MAILED**

SEP 16 2005

**OFFICE OF PETITIONS**

In re Application of
Hans-Heinrich Viehmann
Application No. 10/623,824
Patent No.: 6,888,744
Filing Date: July 21, 2003
Issue Date: May 3, 2005
Attorney Docket No. : MUH-12735
Title: SELECTION DEVICE FOR A SEMICONDUCTOR MEMORY DEVICE

DECISION ON PETITION
UNDER 37 C.F.R. §1.55(A)(2)

This is a decision on the petition under 37 CFR 1.55(a)(2), filed April 28, 2005, for entry of priority papers submitted after the date the issue fee was paid.

The petition is **granted**.

Receipt is acknowledged of papers submitted under 35 U.S.C. § 119.

The priority papers are accepted as timely filed and have been placed of record in the file. Since the reference to the foreign priority claim did not appear on the printed patent, Petitioner may request a certificate of correction pursuant to the provisions of 37 C.F.R. §1.323 and pay the $100 fee therefor.

Any questions concerning this decision on petition should be directed to Senior Attorney Paul Shanoski at (571) 272-3225.

Frances Hicks
Petitions Examiner
Office of Petitions
United States Patent and Trademark Office

UNITED STATES PATENT AND TRADEMARK OFFICE

Commissioner for Patents
United States Patent and Trademark Office
P.O. Box 1450
Alexandria, VA 22313-1450
www.uspto.gov

**WELSH & KATZ, LTD**
**120 S RIVERSIDE PLAZA**
**22ND FLOOR**
**CHICAGO, IL 60606**

**COPY MAILED**

DEC 14 2004

**OFFICE OF PETITIONS**

ON PETITION

| | | |
|---|---|---|
| In re Application of | : | |
| Hori et al. | : | |
| Application No. 10/623,832 | : | |
| Filed: July 21, 2003 | : | |
| Attorney Docket No. 8614/88476 | : | |

This is a decision on the petition under 37 C.F.R. § 1.137(b), filed November 1, 2004, to revive the above-identified application.

The petition is **GRANTED.**

The above-identified application became abandoned for failure to reply in a timely manner to the Notice to File Missing Parts of Application (Notice) mailed October 23, 2003. The Notice set a period for reply of two (2) months from the mail date of the Notice. No extensions of time under the provisions of 37 CFR 1.136(a) were obtained. Accordingly, the above-identified application became abandoned on December 24, 2003. A Notice of Abandonment was mailed on October 21, 2004.

Petitioner has met the requirements to revive the above-identified application pursuant to 37 CFR 1.137(b).

This matter is being referred to the Office of Initial Patent Examination for further processing.

Telephone inquiries regarding this decision should be directed to the undersigned at (571) 272-3282.

Liana Chase
Petitions Examiner
Office of Petitions
Office of the Deputy Commissioner
for Patent Examination Policy

## SPE RESPONSE FOR CERTIFICATE OF CORRECTION

Paper No.: _____

DATE : 01/09/09

TO SPE OF : ART UNIT 2624

SUBJECT : Request for Certificate of Correction for Appl. No.: 10623847 Patent No.: 7463770 B2

Please respond to this request for a certificate of correction within 7 days.

**FOR IFW FILES:**

Please review the requested changes/corrections as shown in the **COCIN** document(s) in the IFW application image. No new matter should be introduced, nor should the scope or meaning of the claims be changed.

Please complete the response (see below) and forward the completed response to scanning using document code **COCX**.

**FOR PAPER FILES:**

Please review the requested changes/corrections as shown in the attached certificate of correction. Please complete this form (see below) and forward it with the file to:

**Certificates of Correction Branch (CofC)**
**South Tower - 9A22**
**Palm Location 7580**
**You can fax the Directors/SPE response to 571-270-9990**

_____
**Certificates of Correction Branch**
**703-308-9390 ext.** _____

**Thank You For Your Assistance**

**The request for issuing the above-identified correction(s) is hereby:**
Note your decision on the appropriate box.

- ☒ **Approved** — **All** changes apply.
- ☐ **Approved in Part** — Specify below which changes **do not** apply.
- ☐ **Denied** — State the reasons for denial below.

**Comments:** _____

SPE: Matthew C. Bella

MATTHEW C. BELLA
SUPERVISORY PATENT EXAMINER
TECHNOLOGY CENTER 2600

## SPE RESPONSE FOR CERTIFICATE OF CORRECTION

Paper No.: _____

DATE : 01/09/09

TO SPE OF : ART UNIT 2624

SUBJECT : Request for Certificate of Correction for Appl. No.: 10623847 Patent No.: 7463770 B2

Please respond to this request for a certificate of correction within 7 days.

**FOR IFW FILES:**

Please review the requested changes/corrections as shown in the **COCIN** document(s) in the IFW application image. No new matter should be introduced, nor should the scope or meaning of the claims be changed.

Please complete the response (see below) and forward the completed response to scanning using document code **COCX**.

**FOR PAPER FILES:**

Please review the requested changes/corrections as shown in the attached certificate of correction. Please complete this form (see below) and forward it with the file to:

**Certificates of Correction Branch (CofC)**
**South Tower - 9A22**
**Palm Location 7580**
**You can fax the Directors/SPE response to 571-270-9990**

_____
**Certificates of Correction Branch**
**703-308-9390 ext.** _____

**Thank You For Your Assistance**

**The request for issuing the above-identified correction(s) is hereby:**
Note your decision on the appropriate box.

- ☑ **Approved** — **All** changes apply.
- ☐ **Approved in Part** — Specify below which changes **do not** apply.
- ☐ **Denied** — State the reasons for denial below.

**Comments:** _____

SPE: Matthew C. Bella

MATTHEW C. BELLA
SUPERVISORY PATENT EXAMINER
TECHNOLOGY CENTER 2600

UNITED STATES PATENT AND TRADEMARK OFFICE

Commissioner for Patents
United States Patent and Trademark Office
P.O. Box 1450
Alexandria, VA 22313-1450
www.uspto.gov

**NIXON PEABODY LLP**
**401 9TH STREET, NW**
**SUITE 900**
**WASHINGTON DC 20004-2128**

COPY MAILED
JUL 1 8 2006
OFFICE OF PETITIONS

| | | |
|---|---|---|
| In re Application of | : | |
| Jun Koyama et al | : | |
| Application No. 10/623,857 | : | ON PETITION |
| Filed: July 22, 2003 | : | |
| Attorney Docket No. 740756-2633 | : | |

This is a decision on the petition, filed July 17, 2006, under 37 CFR 1.313(c)(2) to withdraw the above-identified application from issue after payment of the issue fee.

The petition is **GRANTED**.

The above-identified application is withdrawn from issue for consideration of a submission under 37 CFR 1.114 (request for continued examination). See 37 CFR 1.313(c)(2).

**Petitioner is advised that the issue fee paid on June 12, 2006, in the above-identified application cannot be refunded. If, however, the above-identified application is again allowed, petitioner may request that it be applied towards the issue fee required by the new Notice of Allowance.**[1]

Telephone inquiries should be directed to the undersigned at (571) 272-3208.

The examiner of Technology Center AU 2629 will consider the request for continued examination under 37 CFR 1.114.

Karen Creasy
Petitions Examiner
Office of Petitions

---

[1] The request to apply the issue fee to the new Notice may be satisfied by completing and returning the new Issue Fee Transmittal Form PTOL-85(b), which includes the following language thereon: "Commissioner for Patents is requested to apply the Issue Fee and Publication Fee (if any) or re-apply any previously paid issue fee to the application identified above." Petitioner is advised that, whether a fee is indicated as being due or not, the Issue Fee Transmittal Form **must** be completed and timely submitted to avoid abandonment. Note the language in bold text on the first page of the Notice of Allowance and Fee(s) Due (PTOL-85).

## SPE RESPONSE FOR CERTIFICATE OF CORRECTION

Paper No.: _____

DATE : October 15, 2007

TO SPE OF : ART UNIT 3754 Kevin P. Shaver

SUBJECT : Request for Certificate of Correction for Appl. No.: 10/623,858 Patent No.: 7182221 B2

Please respond to this request for a certificate of correction within 7 days.

Please review the requested changes/corrections as shown in the **COCIN** document(s) in the IFW application image. No new matter should be introduced, nor should the scope or meaning of the claims be changed.

Please complete the response (see below) and forward the completed response to scanning using document code **COCX**.

Antonia Johnson
**Certificates of Correction Branch**
**703-308-9390 ext.** 111

**Thank You For Your Assistance**

**The request for issuing the above-identified correction(s) is hereby:**
Note your decision on the appropriate box.

- ☑ **Approved** — **All** changes apply.
- ☐ **Approved in Part** — Specify below which changes **do not** apply.
- ☐ **Denied** — State the reasons for denial below.

**Comments:** _____

Kevin P. Shaver
**SPE**

3754
**Art Unit**

# UNITED STATES PATENT AND TRADEMARK OFFICE

UNITED STATES DEPARTMENT OF COMMERCE
United States Patent and Trademark Office
Address: COMMISSIONER FOR PATENTS
P.O. Box 1450
Alexandria, Virginia 22313-1450
www.uspto.gov

| APPLICATION NO. | FILING DATE | FIRST NAMED INVENTOR | ATTORNEY DOCKET NO. | CONFIRMATION NO. |
|---|---|---|---|---|
| 10/623,885 | 07/21/2003 | Gerardo Ramos Lucatero | RAMOS | 7627 |

45498 7590 05/17/2005

RISTO A. RINNE, JR.
COMPLETE PATENTING SERVICES
2173 EAST FRANCISCO BOULEVARD, SUITE E
SAN RAFAEL, CA 94901

| EXAMINER |
|---|
| PONOMARENKO, NICHOLAS |

| ART UNIT | PAPER NUMBER |
|---|---|
| 2834 | |

DATE MAILED: 05/17/2005

Please find below and/or attached an Office communication concerning this application or proceeding.

UNITED STATES PATENT AND TRADEMARK OFFICE

Commissioner for Patents
United States Patent and Trademark Office
P.O. Box 1450
Alexandria, VA 22313-1450
www.uspto.gov

*In re* Application of LUCATERO, GERARDO RAMOS
Appl. No.: 10/623,885
Filed: July 21, 2003
For: Electric Generating Convertible Bicycle

**WITHDRAWAL FROM ISSUE**
*37 CFR 1.313*

MAY 17 2005

The purpose of this communication is to inform you that the above identified application is being withdrawn from issue pursuant to 37 CFR 1.313.

The application is being withdrawn to permit reopening of prosecution. The reasons therefor will be communicated to you by the examiner.

U.S. Patent and Trademark Office records reveal that the issue fee has been paid. The applicant may request a refund, or may request that the fee be credited to a deposit account. However, applicant may wait until the application is either again found allowable or held abandoned. If the application is allowed, upon receipt of a new Notice of Allowance and Fees Due, applicant may request that the previously submitted issue fee and publication fee be applied toward payment of the issue fee and publication fee in the amount identified on the new Notice of Allowance and Issue and Publication Fee Due. If the application is abandoned, applicant may request either a refund or a credit to a specified Deposit Account.

The application is being forwarded to the examiner for action.

Richard Seidel
Director
Patent Examining Technology Center 2800

RISTO A. RINNE, JR.
COMPLETE PATENTING SERVICES
2173 EAST FRANCISCO BOULEVARD, SUITE E
SAN RAFAEL, CA 94901

United States
Patent And
Trademark Office

P.O. Box 1450, Alexandria, Virginia 22313-1450 – www.uspto.gov

**PETITION DECISION**

07/14/04

Fleit, Kain, Gibbons, Gutman,
Bongini & Bianco P.L.
551 NW 77th Street, Suite 111
Boca Raton, Fl 33487

Dear Applicant:

The Box PG Pub replacement drawings for application number 10/623890 received on 07/12/04 by the U. S. Patent and Trademark Office will be included for patent publication.

Telephone inquiries should be directed to Kaletus King, Office of Pre-Grant Publication 703 605-4283.

Kaletus King

Signature of Reviewer, Office of Pre-Grant Publication

UNITED STATES PATENT AND TRADEMARK OFFICE

Commissioner for Patents
United States Patent and Trademark Office
P.O. Box 1450
Alexandria, VA 22313-1450
www.uspto.gov

**CANTOR COLBURN, LLP - IBM ARC DIVISION**
**20 CHURCH STREET, 22ND FLOOR**
**HARTFORD, CT 06103**

COPY MAILED

JUN 26 2008

OFFICE OF PETITIONS

In re Application of :
**BINNIG**, et al. :
Application No. 10/623,916 :
Filed: July 21, 2003 :
Attorney Docket No. **CH920000082US1** :

DECISION ON PETITION
UNDER 37 CFR 1.137(b)

This is a decision on the petition under the unintentional provisions of 37 CFR 1.137(b), filed August 13, 2007, to revive the above-identified application.

The petition is **GRANTED.**

This application became abandoned for failure to timely pay the issue and publication fees on or before June 1, 2006, as required by the Notice of Allowance and Fee(s) Due, mailed March 1, 2006. Accordingly, the date of abandonment of this application is June 2, 2006.

The petition satisfies the requirements of 37 CFR 1.137(b) in that petitioner has supplied (1) the reply in the form of payment of the issue fee of $1400 and the publication fee of $300, (2) the petition fee of $1500; and (3) an adequate statement of unintentional delay.

It is not apparent whether the person signing the statement of unintentional delay was in a position to have firsthand or direct knowledge of the facts and circumstances of the delay at issue. Nevertheless, such statement is being treated as having been made as the result of a reasonable inquiry into the facts and circumstances of such delay. See 37 CFR 10.18(b) and Changes to Patent Practice and Procedure; Final Rule Notice, 62 Fed. Reg. 53131, 53178 (October 10, 1997), 1203 Off. Gaz. Pat. Office 63, 103 (October 21, 1997). In the event that such an inquiry has not been made, petitioner must make such an inquiry. If such inquiry results in the discovery that it is not correct that the entire delay in filing the required reply from the due date for the reply until the filing of a grantable petition pursuant to 37 CFR 1.137(b) was unintentional, petitioner must notify the Office.

If the person signing the petition desires to receive future correspondence regarding this application, the appropriate power of attorney document must be submitted. While a courtesy copy of this decision is being mailed to the person signing the petition, all future correspondence will be directed to the address currently of record until appropriate instructions are received.

Telephone inquiries concerning this decision should be directed to Monica A. Graves at (571) 272-7253.

This application is being referred to the Office of Data Management for processing into a patent.

Brian W. Brown
Petitions Examiner
Office of Petitions

Cc: **RICHARD M. GOLDMAN**
**371 ELAN VILLAGE LANE, SUITE 208**
**SAN JOSE, CA 95134**

UNITED STATES PATENT AND TRADEMARK OFFICE

Commissioner for Patents
United States Patent and Trademark Office
P.O. Box 1450
Alexandria, VA 22313-1450
www.uspto.gov

**MYERS BIGEL SIBLEY & SAJOVEC**
**PO BOX 37428**
**RALEIGH NC 27627**

MAILED

FEB 17 2009

OFFICE OF PETITIONS

| | | |
|---|---|---|
| In re Application of | : | |
| **VANCE,** Vicki B. | : | |
| Application No. 10/623,930 | : | DECISION ON PETITION |
| Filed: July 21, 2003 | : | TO WITHDRAW |
| Attorney Docket No. **9536-3** | : | FROM RECORD |
| | : | |

This is a decision on the Request to Withdraw as attorney or agent of record under 37 C.F.R. § 1.36(b), filed December 22, 2008.

The request is **NOT APPROVED**.

A grantable request to withdraw as attorney/agent of record must be signed by every attorney/agent seeking to withdraw or contain a clear indication that one attorney is signing on behalf of another/others. The Office requires the practitioner(s) requesting withdrawal to certify that he, she, or they have: (1) given reasonable notice to the client, prior to the expiration of the response period, that the practitioner(s) intends to withdraw from employment; (2) delivered to the client or a duly authorized representative of the client all papers and property (including funds) to which the client is entitled; and (3) notified the client of any responses that may be due and the time frame within which the client must respond, pursuant 37 CFR 10.40(c).

The request cannot be approved because there is no indication that the acts noted in the above-identified certifications have been performed.

All future communications from the Office will continue to be directed to the above-listed address until otherwise notified by applicant.

Telephone inquiries concerning this decision should be directed to Michelle R. Eason at 571-272- 4231.

Michelle R. Eason
Paralegal Specialist
Office of Petitions

cc: **MR. NEIL BATAVIA**
**DORITY & MANNING, P.A.**
**ONE LIBERTY SQUARE**
**55 BEATTIE PLACE, SUITE 1600**
**GREENVILLE, SC 29601**

UNITED STATES PATENT AND TRADEMARK OFFICE

Commissioner for Patents
United States Patent and Trademark Office
P.O. Box 1450
Alexandria, VA 22313-1450
www.uspto.gov

**JAMES C. SMITH**
**336 HARDER ROAD**
**HAYWARD, CA 94544**

**COPY MAILED**

APR 0 3 2007

**OFFICE OF PETITIONS**

| | | |
|---|---|---|
| In re Application of | : | |
| Smith, James C. | : | |
| Application No. 10/623,933 | : | ON PETITION |
| Filed: July 21, 2003 | : | |
| Title: CLOSURE DEVICE FOR CONTAINERS | : | |

This is a decision on the petition under 37 C.F.R. § 1.137(b), filed January 8, 2007, to revive the above-identified application.

The petition is **GRANTED.**

The petition satisfies the conditions for revival pursuant to the provisions of 37 CFR 1.137(b) in that (1) the reply in the form of a Request for Continued Examination (RCE); (2) the petition fee; and (3) the required statement of unintentional delay have been received. Accordingly, the response has been accepted as having been unintentionally delayed.

This matter is being referred to Technology Center 3700 for processing of the Request for Continued Examination under 37 CFR 1.114 filed with the instant petition.

Telephone inquiries regarding this decision should be directed to the undersigned at (571) 272-3206.

Liana Walsh
Petitions Examiner
Office of Petitions

UNITED STATES PATENT AND TRADEMARK OFFICE

Commissioner for Patents
United States Patent and Trademark Office
P.O. Box 1450
Alexandria, VA 22313-1450
www.uspto.gov

JJGJR.: 04-06

Paper No:__

JUSTIN S. RERKO
& ASSOCIATES, L.L.C.
19836 ELLSWORTH DR.
STRONGSVILLE OH 44149

**COPY MAILED**

APR 11 2006

**OFFICE OF PETITIONS**

| | | |
|---|---|---|
| In re Application of | : | |
| Keene | : | DECISION |
| Application No. 10/623,936 | : | |
| Filing Date: 21 July, 2003 | : | |
| Attorney Docket No.: 5-904 | : | |

This is a revised decision on the petition filed on 15 March, 2006, requesting withdrawal of the holding of abandonment under 37 C.F.R. §1.181.

For the reasons set forth below, the petition as considered under 37 C.F.R. §1.181 is **DISMISSED**.

NOTES:

(1) Any petition (and fee) for reconsideration of this decision must be submitted within two (2) months from the mail date of this decision. Extensions of time under 37 C.F.R. §1.136(a) are permitted. The reconsideration request should include a cover letter entitled "Renewed Petition under 37 C.F.R. §1.181."

(It is noted, however, that Petitioner may be unable to present a satisfactory showing to support a petition under 37 C.F.R. §1.181, and Petitioner's only alternative will be to file a petition under 37 C.F.R. §1.137(b).)

(2) Thereafter, there will be no further reconsideration of this matter.

BACKGROUND

The record reflects that:

- Petitioner failed to reply timely and properly to the final Office action mailed on 28 June, 2005, with reply due absent an extension of time on or before 28 September, 2005;
- the application went abandoned after midnight 28 September, 2005;
- the Office mailed the Notice of Abandonment on 2 February, 2006;
- on 18 March, 2005, Petitioner filed the instant petition, with only an averment that Petitioner timely filed the reply in question and copies of the papers averred to have been timely filed–Petitioner appears to have ignored the requirements set forth at MPEP §711.03(c) regarding matters such as this.

**Moreover, proper monitoring of the status of one's applications on Private PAIR will inform one's management of application responses and provide one an indication when mailings of Office actions should be expected.**

## STATUTES, REGULATIONS AND ANALYSIS

Congress has authorized the Commissioner to "revive an application if the delay is shown to the satisfaction of the Commissioner to have been "unavoidable." 35 U.S.C. §133 (1994).[1]

The regulations at 37 C.F.R. §1.137(a) and (b) set forth the requirements for a petitioner to revive a previously unavoidably or unintentionally, respectively, abandoned application under this congressional grant of authority. The language of 35 U.S.C. §133 and 37 C.F.R. §1.137(a) is clear, unambiguous, and without qualification: the delay in tendering the reply to the outstanding Office action, as well as filing the first petition seeking revival, must have been unavoidable for the reply now to be accepted on petition.[2]

---

[1] 35 U.S.C. §133 provides:
**35 U.S.C. §133 Time for prosecuting application.**
Upon failure of the applicant to prosecute the application within six months after any action therein, of which notice has been given or mailed to the applicant, or within such shorter time, not less than thirty days, as fixed by the Commissioner in such action, the application shall be regarded as abandoned by the parties thereto, unless it be shown to the satisfaction of the Commissioner that such delay was unavoidable.

[2] Therefore, by example, an unavoidable delay in the payment of the Filing Fee might occur if a reply is shipped by the US Postal Service, but due to catastrophic accident, the delivery is not made.

Delays in responding properly raise the question whether delays are unavoidable.[3] Where there is a question whether the delay was unavoidable, Petitioners must meet the burden of establishing that the delay was unavoidable within the meaning of 35 U.S.C. §133 and 37 C.F.R. §1.137(a).[4] And the Petitioner must be diligent in attending to the matter.[5] Failure to do so does not constitute the care required under Pratt, and so cannot satisfy the test for diligence and due care.

(By contrast, unintentional delays are those that do not satisfy the very strict statutory and regulatory requirements of unavoidable delay, and also, by definition, are not intentional.[6]))

Allegations as to the Request to
Withdraw the Holding of Abandonment

The courts have determined the construct for properly supporting a petition seeking withdrawal of a holding of abandonment.[7]

The commentary at MPEP §711.03(c) provides:

* * *

> **B. Petition To Withdraw Holding of Abandonment Based on Evidence That a Reply Was Timely Mailed or Filed**
>
> 37 C.F.R. §1.10(c) through §1.10(e) and §1.10(g) set forth procedures for petitioning the Director of the USPTO to accord a filing date to correspondence as of the date of deposit of the correspondence as "Express Mail." A petition to withdraw the holding of abandonment relying upon a timely reply placed in "Express Mail" must include an appropriate petition under 37 C.F.R. §1.10(c), (d), * (e), or (g) (see MPEP § 513). When a paper is shown to have been mailed to the Office using the "Express Mail" procedures, the paper must be entered in PALM with the "Express Mail" date.

---

[3] See: *Changes to Patent Practice and Procedure; Final Rule Notice*, 62 *Fed. Reg.* at 53158-59 (October 10, 1997), 1203 *Off. Gaz. Pat. Office* at 86-87 (October 21, 1997).

[4] See: In re Application of G, 11 USPQ2d 1378, 1380 (Comm'r Pats. 1989).

[5] See: Diligence in Filing Petitions to Revive and Petitions to Withdraw the Holding of Abandonment, 1124 Off. Gaz. Pat. Office 33 (March 19, 1991). It was and is Petitioner's burden to exercise diligence in seeking either to have the holding of abandonment withdrawn or the application revived. See 1124 Off. Gaz. Pat. Office supra.

[6] Therefore, by example, an unintentional delay in the reply might occur if the reply and transmittal form are to be prepared for shipment by the US Postal Service, but other pressing matters distract one's attention and the mail is not timely deposited for shipment.

[7] See: Delgar v. Schulyer, 172 USPQ 513 (D.D.C. 1971).

Similarly, applicants may establish that a reply was filed with a postcard receipt that properly identifies the reply and provides *prima facie* evidence that the reply was timely filed. See MPEP § 503. For example, if the application has been held abandoned for failure to file a reply to a first Office action, and applicant has a postcard receipt showing that an amendment was timely filed in response to the Office action, then the holding of abandonment should be withdrawn upon the filing of a petition to withdraw the holding of abandonment. When the reply is shown to have been timely filed based on a postcard receipt, the reply must be entered into PALM using the date of receipt of the reply as shown on the post card receipt.

Where a certificate of mailing under 37 C.F.R. §1.8, but not a postcard receipt, is relied upon in a petition to withdraw the holding of abandonment, see 37 C.F.R. §1.8(b) and MPEP § 512. As stated in 37 C.F.R §1.8(b)(3) the statement that attests to the previous timely mailing or transmission of the correspondence must be on a personal knowledge basis, or to the satisfaction of the Director of the USPTO. If the statement attesting to the previous timely mailing is not made by the person who signed the Certificate of Mailing (i.e., there is no personal knowledge basis), then the statement attesting to the previous timely mailing should include evidence that supports the conclusion that the correspondence was actually mailed (e.g., copies of a mailing log establishing that correspondence was mailed for that application). When the correspondence is shown to have been timely filed based on a certificate of mailing, the correspondence is entered into PALM with the actual date of receipt (i.e., the date that the duplicate copy of the papers was filed with the statement under 37 C.F.R. §1.8).

37 C.F.R. §1.8(b) also permits applicant to notify the Office of a previous mailing or transmission of correspondence and submit a statement under 37 C.F.R. 1.8(b)(3) accompanied by a duplicate copy of the correspondence when a reasonable amount of time (e.g., more than one month) has elapsed from the time of mailing or transmitting of the correspondence. Applicant does not have to wait until the application becomes abandoned before notifying the Office of the previous mailing or transmission of the correspondence. Applicant should check the private Patent Application Information Retrieval (PAIR) system for the status of

the correspondence before notifying the Office. See MPEP § 512.

* * *

Thus, Petitioner appears not to have satisfied the showing requirements described above.

## CONCLUSION

Because Petitioner has not satisfied the burdens set forth in Delgar v. Schulyer, the petition as considered under 37 C.F.R. §1.181 hereby is **dismissed**.

## ALTERNATIVE VENUE

Petitioner's only alternative to irretrievable abandonment may be a petition alleging unintentional delay under 37 C.F.R. §1.137(b).[8]

Petitioner may wish to file such a petition to the Commissioner requesting revival of an application abandoned due to unintentional delay. (See: http://www.uspto.gov/web/offices/pac/mpep/documents/0700_711_03_c.htm#sect711.03c )

A petition to revive on the grounds of unintentional delay must be filed promptly and such petition must be accompanied by the reply (the amendment), the petition fee, and a statement that "the entire delay in filing the required reply from the due date for the reply until the filing of a grantable petition was unintentional." (The statement is in the form available online.)

Further correspondence with respect to this matter should be addressed as follows:[9]

By mail: Commissioner for Patents[10]
P.O. Box 1450
Alexandria, VA 22313-1450

By FAX: IFW Formal Filings
(571) 273-8300
ATTN.: Office of Petitions

---

[8] The regulations at 37 C.F.R. §1.183 sets forth that waiver of the rules is "subject to such other requirements as may be imposed."

[9] On July 15, 2005, the Central Facsimile (FAX) Number changed to (571) 273-8300. The old FAX number no longer is in service and (571) 273-8300 will be the only facsimile number recognized for centralized delivery. (For further information. see: http://www.uspto.gov/web/offices/pac/dapp/opla/preognotice/cfax062005.pdf .)

[10] To determine the appropriate addresses for other subject-specific correspondence, refer to the USPTO Web site at www.uspto.gov.

By hand: Mail Stop: Petition
Customer Service Window
Randolph Building
401 Dulany Street
Alexandria, VA 22314

Telephone inquiries concerning this decision may be directed to the undersigned at (571) 272-3214.

John J. Gillon, Jr.
Senior Attorney
Office of Petitions

UNITED STATES PATENT AND TRADEMARK OFFICE

Commissioner for Patents
United States Patent and Trademark Office
P.O. Box 1450
Alexandria, VA 22313-1450
www.uspto.gov

RENNER OTTO
BOISSELLE & SKLAR, LLP
1621 EUCLID AVENUE
NINETEENTH FLOOR
CLEVELAND OH 44115

COPY MAILED

DEC 07 2009

OFFICE OF PETITIONS

In re Application of :
Keene :
Application No. 10/623,936 : DECISION
Filed: 21 July, 2003 :
Attorney Docket No. 5-904 :

This is a decision on the petition filed on 19 August, 2009, pursuant to 37 C.F.R. §1.137(b) for revival of an application abandoned due to unintentional delay .

The petition under 37 C.F.R. §1.137(b) is **DISMISSED**.

**NOTE:**

The 11 April, 2006, dismissal of the 15 March, 2006, petition pursuant to 37 C.F.R. §1.181 to withdraw the holding of abandonment contained the following caution to Petitioner and Applicant: "A petition to revive on the grounds of unintentional delay must be filed promptly and such petition must be accompanied by the reply (the amendment), the petition fee, and a statement that '"the entire delay in filing the required reply from the due date for the reply until the filing of a grantable petition was unintentional."'

It appears that the petition of 19 August, 2009, is the first substantive action taken since that decision.

Petitioner and Applicant have not detailed the underlying facts of the more than 40 month delay since that decision and must do so on any renewed petition.

Any further petition to revive must be submitted within TWO (2) MONTHS from the mail date of this decision. Extensions of time under 37 C.F.R. §1.136(a) are permitted. The reconsideration request should include a cover letter entitled "Renewed Petition under 37 C.F.R. §1.137(b)."

This is **not** a final agency action within the meaning of 5 U.S.C.§704.

As to the Allegations
of Unintentional Delay

The requirements of a grantable petition pursuant to 37 C.F.R. §1.137(b) are the petition and fee therefor, a reply, a proper statement of unintentional delay under the regulation, and, where applicable, a terminal disclaimer and fee. (However, it does not appear that a terminal disclaimer and fee are due here.)

**Petitioner does not appear to have addressed satisfactorily the statement/showing-of-delay requirement under the rule. This deficiency must be overcome.**

**Petitioners' attentions always are directed to the guidance in the Commentary at MPEP §711.03(c )(II).**

BACKGROUND

The record reflects as follows:

Former Counsel/then-Petitioner failed to reply timely and properly to the final Office action mailed on 28 June, 2005, with reply due absent an extension of time on or before 28 September, 2005;

The application went abandoned after midnight 28 September, 2005;

The Office mailed the Notice of Abandonment on 2 February, 2006;

On 18 March, 2006, former Counsel/then-Petitioner filed a petition pursuant to 37 C.F.R. §1.181 to withdraw the holding of abandonment, but included therewith only an averment that Petitioner timely filed the reply in question and copies of the papers averred to have been timely filed—in so doing, former Counsel/then-Petitioner appeared to have ignored the requirements set forth at MPEP §711.03(c). The petition was dismissed on 11 April, 2006, with an 11 June, 2006, due date for any further petition by former Counsel/then-Petitioner and/or Applicant.

It appears that a 31 December, 2007, Revocation/Power of Attorney was entered/acknowledged on 14 January, 2008, and the acknowledgement thereof returned to the Office on 22 January, 2008.

A subsequent Revocation/Power of Attorney was filed on 6 May, 2009.

On 19 August, 2009, Petitioner filed a petition pursuant to 37 C.F.R. §1.137(b), with fee, a reply in the form of a request for continued examination (RCE) with fee and submission in the form of an amendment pursuant to 37 C.F.R. §1.114, and made a statement of unintentional delay—however, it does not appear that Petitioner was the person in whose control the application was at the time of abandonment and there is no showing provided as to the factual basis for the averred unintentional delays that have occurred since midnight 28 September, 2005, and since midnight 1 June, 2006, (the reply due date for any renewed petition following the 11 April, 2006, decision).

**Again, Petitioners' attentions always are directed to the guidance in the Commentary at MPEP §711.03(c )(II).**

The availability of applications and application papers online to applicants/practitioners who diligently associate their Customer Number with the respective application(s) now provides an applicant/practitioner on-demand information as to events/transactions in an application.

Out of an abundance of caution, Petitioners always are reminded that those registered to practice and all others who make representations before the Office **must** inquire into the underlying facts of representations made to the Office and support averments with the appropriate documentation–since all owe to the Office the continuing duty to disclose.[1]

## STATUTES, REGULATIONS AND ANALYSIS

Congress has authorized the Commissioner to "revive an application if the delay is shown to the satisfaction of the Commissioner to have been "unavoidable." 35 U.S.C. §133 (1994).[2]
The regulations at 37 C.F.R. §1.137(a) and (b) set forth the requirements for a Petitioner to revive a previously unavoidably or unintentionally, respectively, abandoned application under this congressional grant of authority.

Unintentional delays are those that do not satisfy the very strict statutory and regulatory requirements of unavoidable delay, and also, by definition, are not intentional.[3]))

---

[1] See supplement of 17 June, 1999. The Patent and Trademark Office is relying on petitioner's duty of candor and good faith and accepting a statement made by Petitioner. See Changes to Patent Practice and Procedure, 62 Fed. Reg. at 53160 and 53178, 1203 Off. Gaz. Pat. Office at 88 and 103 (responses to comments 64 and 109)(applicant obligated under 37 C.F.R. §10.18 to inquire into the underlying facts and circumstances when providing statements to the Patent and Trademark Office).

[2] 35 U.S.C. §133 provides:

**35 U.S.C. §133 Time for prosecuting application.**

Upon failure of the applicant to prosecute the application within six months after any action therein, of which notice has been given or mailed to the applicant, or within such shorter time, not less than thirty days, as fixed by the Commissioner in such action, the application shall be regarded as abandoned by the parties thereto, unless it be shown to the satisfaction of the Commissioner that such delay was unavoidable.

[3] Therefore, by example, an unintentional delay in the reply might occur if the reply and transmittal form are to be prepared for shipment by the US Postal Service, but other pressing matters distract one's attention and the mail is not timely deposited for shipment.

As to Allegations of
Unintentional Delay

As indicated above, the requirements of a grantable petition pursuant to 37 C.F.R. §1.137(b) are the petition and fee therefor, a proper reply, a proper statement and/or showing of unintentional delay under the regulation, and, where applicable, a terminal disclaimer and fee.

As discussed above, it does not appear that Petitioner has satisfied the statement/showing-of-delay requirement under the rule.

## CONCLUSION

Accordingly, the petition under 37 C.F.R. §1.137(b) is **dismissed**.

Further correspondence with respect to this matter should be addressed as follows:

By Mail: Mail Stop PETITION
Commissioner for Patents
P. O. Box 1450
Alexandria, VA 22313-1450

By hand: U. S. Patent and Trademark Office
Customer Service Window, Mail Stop Petitions
Randolph Building
401 Dulany Street
Alexandria, VA 22314

By facsimile: **(571) 273-8300**
Attn: Office of Petitions

Telephone inquiries regarding this decision may be directed to the undersigned at (571) 272-3214—it is noted, however, that all practice before the Office is in writing (see: 37 C.F.R. §1.2[4]) and the proper authority for action on any matter in this regard are the statutes (35 U.S.C.), regulations (37 C.F.R.) and the commentary on policy (MPEP). Therefore, no telephone discussion may be controlling or considered authority for Petitioner's action(s).

/John J. Gillon, Jr./
John J. Gillon, Jr.
Senior Attorney
Office of Petitions

[4] The regulations at 37 C.F.R. §1.2 provide:
**§1.2 Business to be transacted in writing.**
All business with the Patent and Trademark Office should be transacted in writing. The personal attendance of Petitioners or their attorneys or agents at the Patent and Trademark Office is unnecessary. The action of the Patent and Trademark Office will be based exclusively on the written record in the Office. No attention will be paid to any alleged oral promise, stipulation, or understanding in relation to which there is disagreement or doubt.

UNITED STATES PATENT AND TRADEMARK OFFICE

Commissioner for Patents
United States Patent and Trademark Office
P.O. Box 1450
Alexandria, VA 22313-1450
www.uspto.gov

RENNER OTTO
BOISSELLE & SKLAR, LLP
1621 EUCLID AVENUE
NINETEENTH FLOOR
CLEVELAND OH 44115

COPY MAILED
MAR 17 2010

| | | |
|---|---|---|
| In re Application of | : | |
| Keene | : | |
| Application No. 10/623,936 | : | DECISION |
| Filed: 21 July, 2003 | : | |
| Attorney Docket No. 5-904 | : | |

This is a decision on the petition filed on 5 January, 2010, pursuant to 37 C.F.R. §1.137(b) for revival of an application abandoned due to unintentional delay.

The petition under 37 C.F.R. §1.137(b) is **GRANTED**.

As to the Allegations
of Unintentional Delay

The requirements of a grantable petition pursuant to 37 C.F.R. §1.137(b) are the petition and fee therefor, a reply, a proper statement of unintentional delay under the regulation, and, where applicable, a terminal disclaimer and fee. (However, it does not appear that a terminal disclaimer and fee are due here.)

*The attentions of Petitioner always are directed to the guidance in the Commentary at MPEP §711.03(c)(II).*

## BACKGROUND

The record reflects as follows:

Former Counsel/then-Petitioner failed to reply timely and properly to the final Office action mailed on 28 June, 2005, with reply due absent an extension of time on or before 28 September, 2005;

The application went abandoned after midnight 28 September, 2005;

The Office mailed the Notice of Abandonment on 2 February, 2006;

On 18 March, 2006, former Counsel/then-Petitioner filed a petition pursuant to 37 C.F.R. §1.181 to withdraw the holding of abandonment, but included therewith only an averment that Petitioner timely filed the reply in question and copies of the papers averred to have been timely filed—in so doing, former Counsel/then-Petitioner appeared to have ignored the requirements set forth at MPEP '711.03(c). The petition was dismissed on 11 April, 2006, with an 11 June, 2006, due date for any further petition by former Counsel/then-Petitioner and/or Applicant.

It appears that a 31 December, 2007, Revocation/Power of Attorney was entered/acknowledged on 14 January, 2008, and the acknowledgement thereof returned to the Office on 22 January, 2008.

A subsequent Revocation/Power of Attorney was filed on 6 May, 2009.

On 19 August, 2009, Petitioner filed a petition pursuant to 37 C.F.R. §1.137(b), with fee, a reply in the form of a request for continued examination (RCE) with fee and submission in the form of an amendment pursuant to 37 C.F.R. §1.114, and made a statement of unintentional delay—however, it did not appear that Petitioner was the person in whose control the application at the time of abandonment and there was no showing provided as to the factual basis for the averred unintentional delays that occurred after midnight 28 September, 2005, and after midnight 11 June, 2006, (the reply due date for any renewed petition following the 11 April, 2006, decision). The petition was dismissed on 7 December, 2009.

On 5 January, 2010, Petitioner filed a petition pursuant to 37 C.F.R. §1.137(b), with fee, pointed to the previously filed reply and made a showing of unintentional delay through an extended statement by the Applicant.

Petitioners' attentions always are directed to the guidance in the Commentary at MPEP §711.03(c )(II).

The record (including the petitions filed on 15 March, 2006, on 19 August, 2009, and on 5 January, 2010) does not necessitate a finding that the delay between midnight 28 September, 2005 (the date of abandonment), and 5 January, 2010 (the date of the filing of grantable petition), was not unintentional.

Rather, the Patent and Trademark Office is relying in this matter on the duty of candor and good faith of Petitioner/Applicant James R. Keene and Counsel Neil A. DuChez (Reg. No. 26,725) when accepting Petitioners' representation that the delay in filing the response <u>was</u> unintentional.[1]

---

[1] <u>See</u> <u>Changes to Patent Practice and Procedure</u>, 62 <u>Fed. Reg.</u> at 53160 and 53178, 1203 <u>Off. Gaz. Pat. Office</u> at 88 and 103 (responses to comments 64 and 109)(applicant obligated under 37 C.F.R. '10.18 to inquire into the underlying facts and circumstances when providing the statement required by 37 C.F.R. '1.137(b) to the Patent and Trademark Office).

The availability of applications and application papers online to applicants/practitioners who diligently associate their Customer Number with the respective application(s) now provides an applicant/practitioner on-demand information as to events/transactions in an application.

Out of an abundance of caution, Petitioners always are reminded that those registered to practice and all others who make representations before the Office **must** inquire into the underlying facts of representations made to the Office and support averments with the appropriate documentation–since all owe to the Office the continuing duty to disclose.[2]

## STATUTES, REGULATIONS AND ANALYSIS

Congress has authorized the Commissioner to "revive an application if the delay is shown to the satisfaction of the Commissioner to have been "unavoidable." 35 U.S.C. §133 (1994).[3]
The regulations at 37 C.F.R. §1.137(a) and (b) set forth the requirements for a Petitioner to revive a previously unavoidably or unintentionally, respectively, abandoned application under this congressional grant of authority.

Unintentional delays are those that do not satisfy the very strict statutory and regulatory requirements of unavoidable delay, and also, by definition, are not intentional.[4]))

### As to Allegations of Unintentional Delay

The requirements of a grantable petition pursuant to 37 C.F.R. §1.137(b) are the petition and fee therefor, a reply, a proper statement of unintentional delay under the regulation, and, where applicable, a terminal disclaimer and fee.

It appears that the requirements under the rule have been satisfied.

## CONCLUSION

Accordingly, the petition pursuant to 37 C.F.R. §1.137(b) is **granted**.

---

[2] See supplement of 17 June, 1999. The Patent and Trademark Office is relying on petitioner's duty of candor and good faith and accepting a statement made by Petitioner. See Changes to Patent Practice and Procedure, 62 Fed. Reg. at 53160 and 53178, 1203 Off. Gaz. Pat. Office at 88 and 103 (responses to comments 64 and 109)(applicant obligated under 37 C.F.R. §10.18 to inquire into the underlying facts and circumstances when providing statements to the Patent and Trademark Office).

[3] 35 U.S.C. §133 provides:

**35 U.S.C. §133 Time for prosecuting application.**
Upon failure of the applicant to prosecute the application within six months after any action therein, of which notice has been given or mailed to the applicant, or within such shorter time, not less than thirty days, as fixed by the Commissioner in such action, the application shall be regarded as abandoned by the parties thereto, unless it be shown to the satisfaction of the Commissioner that such delay was unavoidable.

[4] Therefore, by example, an unintentional delay in the reply might occur if the reply and transmittal form are to be prepared for shipment by the US Postal Service, but other pressing matters distract one's attention and the mail is not timely deposited for shipment.

The instant application is released to the Technology Center/AU 3600/3635 for further processing in due course.

Petitioner may find it beneficial to view Private PAIR within a fortnight of the instant decision to ensure that the revival has been acknowledged by the TC/AU in response to this decision. It is noted that all inquiries with regard to that change in status need be directed to the TC/AU where that change of status must be effected—that does not occur in the Office of Petitions.

Telephone inquiries regarding this decision may be directed to the undersigned at (571) 272-3214—it is noted, however, that all practice before the Office is in writing (see: 37 C.F.R. §1.2[5]) and the proper authority for action on any matter in this regard are the statutes (35 U.S.C.), regulations (37 C.F.R.) and the commentary on policy (MPEP). Therefore, no telephone discussion may be controlling or considered authority for Petitioner's action(s).

/John J. Gillon, Jr./
John J. Gillon, Jr.
Senior Attorney
Office of Petitions

[5] The regulations at 37 C.F.R. §1.2 provide:
**§1.2 Business to be transacted in writing.**
All business with the Patent and Trademark Office should be transacted in writing. The personal attendance of applicants or their attorneys or agents at the Patent and Trademark Office is unnecessary. The action of the Patent and Trademark Office will be based exclusively on the written record in the Office. No attention will be paid to any alleged oral promise, stipulation, or understanding in relation to which there is disagreement or doubt.

UNITED STATES PATENT AND TRADEMARK OFFICE

Commissioner for Patents
United States Patent and Trademark Office
P.O. Box 1450
Alexandria, VA 22313-1450
www.uspto.gov

DEC -1 2004

| | | |
|---|---|---|
| In re Application of | : | |
| Jan LeVine | : | |
| Serial No. 10/623,943 | : | DECISION ON PETITION |
| Filed: July 21, 2003 | : | TO WITHDRAW AS ATTORNEY |
| For: SHOE TAP PROTECTORS | : | |

By papers filed on July 15, 2004, counsel has petitioned to withdraw as attorney of record in this application.

The petition is GRANTED.

Applicant is advised that the correspondence address for this application is:

Jan LeVine
SK Ventures LLC
21618 Los Alimos Street
Chatsworth, CA 91311

E. Rollins-Cross, Director
Technology Center 3700

Haynes and Boone, LLP
1000 Louisiana, Suite 4300
Houston, TX 77002

UNITED STATES PATENT AND TRADEMARK OFFICE

COMMISSIONER FOR PATENTS
UNITED STATES PATENT AND TRADEMARK OFFICE
P.O. BOX 1450
ALEXANDRIA, VA 22313-1450
WWW.USPTO.GOV

Paper No. None

BEYER WEAVER & THOMAS LLP
P.O. BOX 778
BERKELEY CA 94704-0778

COPY MAILED
JAN 0 9 2004
OFFICE OF PETITIONS

In re Application of
Kurt R. Lehman et al.
Application No. 10/623,953
Filed: July 21, 2003
Attorney Docket No. KLA1P015AD2/P611A2
Title: In-Situ Metalization Monitoring using Eddy Current Measurements During the Process for Removing the Film

DECISION ON PETITION

This is a decision on the petition filed on September 22, 2003, pursuant to 37 C.F.R. §1.137(f), to revive the above-identified application.

A grantable petition pursuant to 37 CFR 1.137(f) must be accompanied by:

(1) Notification of the filing of an application in a foreign country or under a multinational treaty that requires 18 month publication[1];
(2) The petition fee as set forth in 37 C.F.R. § 1.17(m), and;
(3) A statement that the entire delay in filing the notice from the date that the notice was due under 35 U.S.C. §122(b)(2)(B)(iii) until the date the notice was filed was unintentional. The Commissioner may require additional information where there is a question whether the delay was unintentional.

On September 22, 2003, the instant petition was filed with the Office. Petitioner states that the instant nonprovisional application is the subject of an application filed in either a foreign country or under a multinational agreement. Unfortunately, notification of the filing of the foreign or international application did not accompany this filing.

As such, petitioner has not met the first requirement above.

1 See PTO/SB/36 and paragraph on PTO/SB/64a for further information. Both may be downloaded at http://www.uspto.gov/web/forms/index.html.

In view of the foregoing, this petition is **DISMISSED**. Any request for reconsideration of this decision must be submitted within **TWO (2) MONTHS** from the mail date of this decision. Extensions of time under 37 CFR 1.136(a) are permitted. The reconsideration request should include a cover letter entitled "Renewed Petition under 37 CFR 1.137(f)." Petitioner must submit the date which the foreign or international application was filed.

Petitioner is reminded that if an applicant makes a nonpublication request and then rescinds the nonpublication request before or on the date a counterpart application is filed in an eighteen-month publication country, the application will be treated as if the nonpublication request were never made, and any petition fee would be refunded.

The reply to this letter may be submitted by mail[2], hand-delivery[3], or facsimile[4].

**The application file will be retained in the Office of Petitions for two (2) months.**

Telephone inquiries regarding *this decision* should be directed to the undersigned at (703) 305-0011.

Paul Shanoski
Attorney
Office of Petitions
United States Patent and Trademark Office

2 Mail Stop Petition, Commissioner for Patents, United States Patent and Trademark Office, P.O. Box 1450, Alexandria, VA, 22313-1450.
3 Customer Window, Mail Stop Petition, Crystal Plaza Two, Lobby, Room 1B03, Arlington, Virginia 22202.
4 (703) 872-9306, attention Office of Petitions, Attorney Paul Shanoski.

UNITED STATES PATENT AND TRADEMARK OFFICE

COMMISSIONER FOR PATENTS
UNITED STATES PATENT AND TRADEMARK OFFICE
P.O. BOX 1450
ALEXANDRIA, VA 22313-1450
WWW.USPTO.GOV

Paper No. None

BEYER WEAVER & THOMAS LLP
P.O. BOX 778
BERKELEY CA 94704-0778

**COPY MAILED**

**MAR 0 4 2004**

**OFFICE OF PETITIONS**

In re Application of
Kurt R. Lehman et al.
Application No. 10/623,953
Filed: July 21, 2003
Attorney Docket No. KLA1P015AD2/P611A2
Title: In-Situ Metalization Monitoring using Eddy Current Measurements During the Process for Removing the Film

DECISION ON RENEWED PETITION

This is a decision on the renewed petition filed January 29, 2004, pursuant to 37 C.F.R. §1.137(f), to revive the above-identified application.

A grantable petition pursuant to 37 CFR 1.137(f) must be accompanied by:

(1) Notification of the filing of an application in a foreign country or under a multinational treaty that requires 18 month publication[1];
(2) The petition fee as set forth in 37 C.F.R. § 1.17(m), and;
(3) A statement that the entire delay in filing the notice from the date that the notice was due under 35 U.S.C. §122(b)(2)(B)(iii) until the date the notice was filed was unintentional. The Commissioner may require additional information where there is a question whether the delay was unintentional.

On September 22, 2003, the original petition was filed with the Office, which was dismissed via the mailing of a decision on January 9, 2004, for failure to include notification of the filing of the foreign or international application.

With the renewed petition, Petitioner sets forth that the instant nonprovisional application is the subject of an application filed in either a foreign or an international application on December 22, 2000.

1 See PTO/SB/36 and paragraph on PTO/SB/64a for further information. Both may be downloaded at http://www.uspto.gov/web/forms/index.html.

The record discloses that on July 21, 2003, the date of filing of the instant application, a Request and Certification under 35 USC 122(b)(2)(B)(i) was filed, certifying that "the invention disclosed in the attached **application has not and will not** be the subject of an application filed in another country, or under a multilateral agreement, that requires publication at eighteen months after filing." This request was signed by the petitioner, over the equivalent of his registration number[2].

On September 22, 2003, the original petition was filed, which constituted the equivalent of a Request to Rescind the Nonpublication Request. This request did not reveal the filing date of the international application. With the renewed petition, Petitioner now requests under 35 USC 122(b)(2)(B)(ii) that the Request and Certification under 35 USC 122(b)(2)(B)(i) be rescinded and the application revived because this application became abandoned for failure to notify the Office within 45 days of the filing of a corresponding international or foreign application. In this regard, petitioner states that an international or foreign application corresponding to the instant application was filed on **December 22, 2000**, which is **prior** to the date of filing the instant application.

The instant nonprovisional application did not become abandoned as a result of the published international application filed prior to the present application. In this regard, 35 USC 122(b)(2)(B)(iii) states:

An applicant who has made a request under clause (i) but who **subsequently files, in a foreign country or under a multilateral international agreement** specified in clause (i), an application directed to the invention disclosed in the application filed in the Patent and Trademark Office, shall notify the Director of such filing not later than 45 days **after the date of the filing of such foreign or international application**. A failure of the applicant to provide such notice within the prescribed period shall result in the application being regarded as abandoned, unless it is shown to the satisfaction of the Director that the delay in submitting the notice was unintentional (emphasis added).

The facts of this case are that the subject application was filed on December 22, 2000, and the corresponding application was filed July 21, 2003. The statute does not provide for the situation where a certification under 35 USC 122(b)(2)(B)(i) was made, despite the fact that an application was previously filed in another country or under a multilateral agreement. The statute at 35 USC 122(b)(2)(B)(iii) only provides for revival in the situation where a certification was made under 35 USC 122(b)(2)(B)(i) at the time of filing the application and an application was subsequently filed in a foreign country without notifying the Office within 45 days of the filing thereof.

In view of the above, and since this application did not become abandoned pursuant to the provisions of 35 USC 122(b)(2)(B)(iii), a petition to revive under the provisions of 37 CFR 1.137(f)is inappropriate and must be dismissed.

Therefore, the petition is **DISMISSED AS INAPPROPRIATE**.

The previous Request and Certification under 35 U.S.C. §122(b)(2)(B)(i), filed with the original application papers, has been rescinded. Unfortunately, due to a software problem the Office is currently experiencing, the Office cannot determine the projected publication date at this time.

2 The Petitioner has a limited recognition to practice before the Office, pursuant to 37 C.F.R. §10.9(b).

The rules and statutory provisions governing the operations of the US Patent and Trademark Office require payment of a fee on filing each petition[3]. Payment of the $1,300 petition fee is acknowledged.

After the mailing of this decision, the application file will be forwarded to Technology Center 2800 for further processing.

Telephone inquiries regarding *this decision* should be directed to the undersigned at (703) 305-0011.

Paul Shanoski
Attorney
Office of Petitions
United States Patent and Trademark Office

3 35 USC §41(a)(7).

UNITED STATES PATENT AND TRADEMARK OFFICE

COMMISSIONER FOR PATENTS
UNITED STATES PATENT AND TRADEMARK OFFICE
P.O. BOX 1450
ALEXANDRIA, VA 22313-1450
WWW.USPTO.GOV

Paper No. None

BEYER WEAVER & THOMAS LLP
P.O. BOX 778
BERKELEY CA 94704-0778

COPY MAILED
MAR 0 4 2004
OFFICE OF PETITIONS

In re Application of
Kurt R. Lehman et al.
Application No. 10/623,953
Filed: July 21, 2003
Attorney Docket No. KLA1P015AD2/P611A2
Title: In-Situ Metalization Monitoring using Eddy Current Measurements During the Process for Removing the Film

DECISION ON RENEWED PETITION

This is a decision on the renewed petition filed January 29, 2004, pursuant to 37 C.F.R. §1.137(f), to revive the above-identified application.

A grantable petition pursuant to 37 CFR 1.137(f) must be accompanied by:

(1) Notification of the filing of an application in a foreign country or under a multinational treaty that requires 18 month publication[1];
(2) The petition fee as set forth in 37 C.F.R. § 1.17(m), and;
(3) A statement that the entire delay in filing the notice from the date that the notice was due under 35 U.S.C. §122(b)(2)(B)(iii) until the date the notice was filed was unintentional. The Commissioner may require additional information where there is a question whether the delay was unintentional.

On September 22, 2003, the original petition was filed with the Office, which was dismissed via the mailing of a decision on January 9, 2004, for failure to include notification of the filing of the foreign or international application.

With the renewed petition, Petitioner sets forth that the instant nonprovisional application is the subject of an application filed in either a foreign or an international application on December 22, 2000.

DOCKET NO:
DOCKETED:
DUE DATE:
ACTION:
VILA: VASSOC:
BEAER WEAVER & THOMAS

1 See PTO/SB/36 and paragraph on PTO/SB/64a for further information. Both may be downloaded at http://www.uspto.gov/web/forms/index.html.

The record discloses that on July 21, 2003, the date of filing of the instant application, a Request and Certification under 35 USC 122(b)(2)(B)(i) was filed, certifying that "the invention disclosed in the attached **application has not and will not** be the subject of an application filed in another country, or under a multilateral agreement, that requires publication at eighteen months after filing." This request was signed by the petitioner, over the equivalent of his registration number[2].

On September 22, 2003, the original petition was filed, which constituted the equivalent of a Request to Rescind the Nonpublication Request. This request did not reveal the filing date of the international application. With the renewed petition, Petitioner now requests under 35 USC 122(b)(2)(B)(ii) that the Request and Certification under 35 USC 122(b)(2)(B)(i) be rescinded and the application revived because this application became abandoned for failure to notify the Office within 45 days of the filing of a corresponding international or foreign application. In this regard, petitioner states that an international or foreign application corresponding to the instant application was filed on **December 22, 2000**, which is **prior** to the date of filing the instant application.

The instant nonprovisional application did not become abandoned as a result of the published international application filed prior to the present application. In this regard, 35 USC 122(b)(2)(B)(iii) states:

> An applicant who has made a request under clause (i) but who **subsequently files, in a foreign country or under a multilateral international agreement** specified in clause (i), an application directed to the invention disclosed in the application filed in the Patent and Trademark Office, shall notify the Director of such filing not later than 45 days **after the date of the filing of such foreign or international application**. A failure of the applicant to provide such notice within the prescribed period shall result in the application being regarded as abandoned, unless it is shown to the satisfaction of the Director that the delay in submitting the notice was unintentional (emphasis added).

The facts of this case are that the subject application was filed on December 22, 2000, and the corresponding application was filed July 21, 2003. The statute does not provide for the situation where a certification under 35 USC 122(b)(2)(B)(i) was made, despite the fact that an application was previously filed in another country or under a multilateral agreement. The statute at 35 USC 122(b)(2)(B)(iii) only provides for revival in the situation where a certification was made under 35 USC 122(b)(2)(B)(i) at the time of filing the application and an application was subsequently filed in a foreign country without notifying the Office within 45 days of the filing thereof.

In view of the above, and since this application did not become abandoned pursuant to the provisions of 35 USC 122(b)(2)(B)(iii), a petition to revive under the provisions of 37 CFR 1.137(f)is inappropriate and must be dismissed.

Therefore, the petition is **DISMISSED AS INAPPROPRIATE**.

The previous Request and Certification under 35 U.S.C. §122(b)(2)(B)(i), filed with the original application papers, has been rescinded. Unfortunately, due to a software problem the Office is currently experiencing, the Office cannot determine the projected publication date at this time.

---

2 The Petitioner has a limited recognition to practice before the Office, pursuant to 37 C.F.R. §10.9(b).

The rules and statutory provisions governing the operations of the US Patent and Trademark Office require payment of a fee on filing each petition[3]. Payment of the $1.300 petition fee is acknowledged.

After the mailing of this decision, the application file will be forwarded to Technology Center 2800 for further processing.

Telephone inquiries regarding *this decision* should be directed to the undersigned at (703) 305-0011.

Paul Shanoski
Attorney
Office of Petitions
United States Patent and Trademark Office

3 35 USC §41(a)(7).

UNITED STATES PATENT AND TRADEMARK OFFICE

Commissioner for Patents
United States Patent and Trademark Office
P.O. Box 1450
Alexandria, VA 22313-1450
www.uspto.gov

**BRUCE E. GARLICK**
**P.O. BOX 160727**
**AUSTIN, TX 78716-0727**

COPY MAILED

DEC 0 7 2007

OFFICE OF PETITIONS

| | | |
|---|---|---|
| In re Application of | : | |
| Yin, Guangming | : | |
| Application No. 10/623,992 | : | ON PETITION |
| Filed: July 21, 2003 | : | |
| Attorney Docket No. BP2517 | : | |

This is a decision on the petition under 37 CFR 1.181, filed November 8, 2007, requesting the withdrawal of the holding of abandonment in the above-identified application and has been so treated.

The petition to withdraw the holding of abandonment is **GRANTED.**

The above-identified application was held abandoned for failure to timely reply to the non-final Office action mailed July 31, 2006, which set a shortened statutory period for reply of three (3) months. A reply was due on or before October 31, 2006. A Notice of Abandonment was mailed on April 5, 2007.

Petitioner states that the reply was in fact timely filed. To support this assertion, petitioner has supplied a copy of the previously mailed correspondence, which bears a certificate of mailing or facsimile transmission date of December 31, 2006.

In view of the above, the holding of abandonment is hereby withdrawn and the application restored to pending status. A petition to withdraw the holding of abandonment under the provisions of 37 CFR 1.181 does not require a fee and none has been charged.

This matter is being referred to Technology Center AU 2815 for further examination on the merits.

Telephone inquiries concerning this decision should be directed to the undersigned at (571) 272-3206.

Liana Walsh
Petitions Examiner
Office of Petitions

UNITED STATES PATENT AND TRADEMARK OFFICE

Commissioner for Patents
United States Patent and Trademark Office
P.O. Box 1450
Alexandria, VA 22313-1450
www.uspto.gov

3M INNOVATIVE PROPERTIES COMPANY
PO BOX 33427
ST. PAUL MN 55133-3427

COPY MAILED
JUN 0 1 2006
OFFICE OF PETITIONS

In re Application of :
Nerad, et al. :
Application No. 10/624,012 : ON PETITION
Filed: July 21, 2003 :
Attorney Docket No. 58785US002 :
For: METHOD AND APPARATUS FOR INKJET PRINTING USING RADIATION CURABLE INK

This is a decision on the petition under 37 CFR 1.181, filed April 26, 2006, requesting that the Office withdraw the holding of abandonment of the above-identified application.

The petition under 37 CFR 1.181 is **GRANTED**.

This application was held abandoned for failure to respond in a timely manner to the Notice of Allowance and Fee(s) Due, mailed June 2, 2005, which set forth a three (3) month period for reply. The Office contended that this application became abandoned on September 3, 2005 for failure to reply. A Notice of Abandonment was mailed on April 6, 2006.

Petitioners assert a RCE and IDS were timely transmitted via facsimile to and received by the Office on June 10, 2005. The undersigned finds this assertion completely convincing as these documents are present in the application file.

The petition under 37 CFR 1.181 is **granted** and the Notice of Abandonment is **vacated**. No petition fee has been or will be charged in connection with this matter. Pursuant to petitioners' authorization, the RCE fee of $790.00 will be charged to deposit account no. 13-3723 on mailroom date June 10, 2005.

Accordingly, the application file will be forwarded to Technology Center A.U. 2861 for consideration of the RCE and IDS filed on June 10, 2005.

Telephone inquiries pertaining to this matter may be directed to the undersigned at (571) 272-3230.

E. Shirene Willis
Senior Petitions Attorney
Office of Petitions
Office of the Deputy Commissioner
for Patent Examination Policy

UNITED STATES PATENT AND TRADEMARK OFFICE

Commissioner for Patents
United States Patent and Trademark Office
P.O. Box 1450
Alexandria, VA 22313-1450
www.uspto.gov

Paper No.

THE PROCTER & GAMBLE COMPANY
Global Legal Department - IP
Sycamore Building - 4th Floor
299 East Sixth Street
CINCINNATI OH 45202

**COPY MAILED**

JAN 22 2009

**OFFICE OF PETITIONS**

| | | |
|---|---|---|
| In re Application of | : | DECISION ON PETITION |
| Davenport et al. | : | |
| Application No. 10/624,017 | : | |
| Filed: July 21, 2003 | : | |
| Attorney Docket No. P124C2 | : | |

This is a decision on the PETITION FOR REVIVAL OF AN APPLICATION FOR PATENT ABANDONED UNINTENTIONALLY UNDER 37 CFR 1.137(b) filed August 25, 2008.

The petition is **GRANTED**.

The above-identified application became abandoned for failure to pay the Issue Fee and Publication Fee within three months of the mailing date, October 19, 2007, of the Notice of Allowance and Fee(s) Due. This Office action set a three-month nonextendable statutory period for reply. An issue fee transmittal was received on January 15, 2008 with no authorization for payment of the required fees. No further reply filed, the above-identified application became abandoned effective January 20, 2008. A courtesy Notice of Abandonment was mailed on June 24, 2008.

This petition includes the required reply[1] in the form of payment of the Issue Fee and Publication Fee; payment of the petition fee set forth in 37 CFR § 1.17(m); and the required statement of unintentional delay. No terminal disclaimer is required.

[1] The Notice of Allowability did not set forth a distinct but concurrent requirement for corrected drawings.

It is concluded that all requirements of 37 CFR 1.137(b) have been met.

The Office of Data Management has been advised of this decision. The application is, thereby, forwarded for processing into a patent.

Telephone inquiries related to this decision should be directed to the undersigned at (571) 272-3219.

Nancy Johnson
Senior Petitions Attorney
Office of Petitions

UNITED STATES PATENT AND TRADEMARK OFFICE

COMMISSIONER FOR PATENTS
UNITED STATES PATENT AND TRADEMARK OFFICE
P.O. BOX 1450
ALEXANDRIA, VA 22313-1450
www.uspto.gov

BP America Inc.
Docket Clerk, BP Legal, M.C. 5East
4101 Winfield Road
Warrenville IL 60555

COPY MAILED

FEB 12 2007

OFFICE OF PETITIONS

| | | |
|---|---|---|
| In re Application of | : | |
| CASAL et al | : | |
| Application No.: 10/624,022 | : | DECISION ON PETITION |
| Filing Date: July 21, 2003 | : | UNDER 37 CFR 1.137(b) |
| Attorney Docket No.: BP949302 | : | |

This is a decision on the petition under 37 CFR 1.137(b), filed October 16, 2006, to revive the above-identified application.

The petition is **GRANTED.**

The above-identified application became abandoned for failure to reply in a timely manner to the non-final Office action mailed March 29, 2005, which set a shortened statutory period for reply of three (3) months. A three (3) month extension of time under the provisions of 37 CFR 1.136(a) was obtained. Accordingly, by operation of law, the above-identified application became abandoned on September 29, 2005.

The petition satisfies the conditions for revival pursuant to the provisions of 37 CFR 1.137(b) in that (1) the reply in the form of an amendment and arguments; (2) the petition fee; and (3) the required statement of unintentional delay have been received. Accordingly, the reply to the non-final Office action mailed March 29, 2005 is accepted as having been unintentionally delayed.

The Notice of Abandonment mailed September 27, 2006 is hereby VACATED.

This application is being referred to Technology Center AU 1743 for appropriate action on the reply in due course.

Telephone inquiries concerning this decision should be directed to the undersigned at (571) 272-3301.

Daniel Stemmer
Legal Examiner
Office of the Deputy Commissioner
for Patent Examination Policy

UNITED STATES PATENT AND TRADEMARK OFFICE

Commissioner for Patents
United States Patent and Trademark Office
P.O. Box 1450
Alexandria, VA 22313-1450
www.uspto.gov

Paper No.

FROMMER LAWRENCE & HAUG
745 FIFTH AVENUE- 10TH FL.
NEW YORK, NY 10151

**COPY MAILED**

**AUG 2 0 2004**

**OFFICE OF PETITIONS**

| | | |
|---|---|---|
| In re Application of | : | |
| Allan et al. | : | |
| Application No. 10/624,049 | : | ON PETITION |
| Filed: July 21, 2003 | : | |
| Atty Docket No. 454313-2180.3 | : | |

This is a decision on the "RESPONSE TO NOTICE OF OMITTED ITEMS AND PETITION TO BE AWARDED FILING DATE," filed May 26, 2004, requesting a filing date of July 21, 2003 with Figure 7A considered a part of the original application disclosure.

The application was filed on July 21, 2003. However, on April 15, 2004, the Office mailed a "Notice of Omitted Items" stating that the application had been accorded a filing date; however, Figure 7A described in the specification appeared to have been omitted.

In response, the present petition was filed requesting, in effect, that the application be amended to include the drawing of Figure 7A described in the specification. Petitioner describes Figure 7A as being inadvertently omitted. Petitioner points out that the application as filed included an incorporation by reference of a prior application containing Figure 7A. Petitioner submitted a copy of their return postcard to show that a declaration for patent was among the items submitted on filing.

The petition is **dismissed.**

The mailing of a "Notice of Omitted Items" permits the applicant to either: (1) promptly establish prior receipt in the PTO of the drawing(s) at issue (generally by way of a date-stamped postcard receipt (MPEP 503)), or (2) promptly submit the omitted drawing(s) in a nonprovisional application and accept the date of such submission as the application filing date. An applicant asserting that the missing drawing was in fact deposited in the PTO with the application papers must file a petition (and the appropriate petition fee) with evidence of such deposit. An applicant desiring to submit the omitted drawing in a nonprovisional application and accept the date of such submission as the application filing date must file any omitted drawing(s) with an oath or declaration in compliance with 37 CFR 1.63 and 1.64 referring to such drawing(s) and a petition under 37 CFR 1.182 (with the petition fee under 37 CFR 1.17(h)) requesting the later filing date within two months of the date of the "Notice of Omitted Items" (37 CFR 1.181(f)).

In this case, petitioner neither asserts that the missing drawing was deposited on July 21, 2003, nor requests the May 26, 2004 (the date the drawing was supplied) filing date.

Instead, applicants seek to rely on the incorporation by reference statement and thereby, to amend the application to include the drawing figure 7A. However, no petition under 37 CFR 1.182 is necessary for that purpose. New drawings may be entered by the primary examiner without petition so long as the new drawings contain no new matter. See MPEP § 608.02(a).

Accordingly, the petition is inappropriate and is subject to dismissal.

It is noted that the application transmittal letter identified this application as a continuation of prior application No. 08/884,514 and specifically incorporated by reference the disclosure of the prior application. MPEP 201.06(c) states that:

> . . . an applicant may incorporate by reference the prior application by including, in the application-as-filed, a statement that such specifically enumerated prior application or applications are "hereby incorporated herein by reference." The statement may appear in the specification or in the application transmittal letter. The inclusion of this incorporation by reference of the prior application(s) will permit an applicant to amend the continuation or divisional application to include any subject matter in such prior application(s), <u>without the need for a petition</u> provided the continuation or divisional application is entitled to a filing date notwithstanding the incorporation by reference.
> (Emphasis supplied)

Obviously, in view of the incorporation by reference of the prior application, the drawing of Figure 7A is not new matter if it was a part of the disclosure of the prior application. Applicants should file a preliminary amendment requesting entry of the figure prior to the first Office action on the merits.

The application is being returned to the Office of Initial Patent Examination for further processing with a filing date of July 21, 2003, including an indication in Office records that 17 sheets of drawings were present on filing.

Telephone inquiries related to this decision may be directed to the undersigned at (703) 305-0309.

Nancy Johnson

Nancy Johnson
Senior Petitions Attorney
Office of Petitions

# UNITED STATES PATENT AND TRADEMARK OFFICE

UNITED STATES DEPARTMENT OF COMMERCE
United States Patent and Trademark Office
Address: COMMISSIONER FOR PATENTS
P.O. Box 1450
Alexandria, Virginia 22313-1450
www.uspto.gov

| APPLICATION NO. | FILING DATE | FIRST NAMED INVENTOR | ATTORNEY DOCKET NO. | CONFIRMATION NO. |
|---|---|---|---|---|
| 10/624,069 | 07/21/2003 | Rakesh Agrawal | ARC920030034US1 | 6946 |

29154 7590 03/26/2008
FREDERICK W. GIBB, III
Gibb & Rahman, LLC
2568-A RIVA ROAD
SUITE 304
ANNAPOLIS, MD 21401

| EXAMINER |
|---|
| PADMANABHAN, KAVITA |

| ART UNIT | PAPER NUMBER |
|---|---|
| 2161 | |

| MAIL DATE | DELIVERY MODE |
|---|---|
| 03/26/2008 | PAPER |

**Please find below and/or attached an Office communication concerning this application or proceeding.**

The time period for reply, if any, is set in the attached communication.

UNITED STATES PATENT AND TRADEMARK OFFICE

Commissioner for Patents
United States Patent and Trademark Office
P.O. Box 1450
Alexandria, VA 22313-1450
www.uspto.gov

Frederick W. Gibb, III
GIBB & RAHMAN, LLC
2568-A Riva Raod
Suite 304
Annapolis, MD 21401

In re Application of:
AGRAWAL et al.
Application No. 10/624,069
Filed: July 21, 2003
For: MINING ASSOCIATION RULES OVER PRIVACY PRESERVING DATA

**DECISION ON PETITION UNDER 37 C.F.R. § 1.181**

This is a decision on the petition, filed on 02 November 2006, under 37 CFR § 1.182. The petition is being treated as a petition under 37 CFR § 1.181 to invoke Supervisory Authority of the Director and to request the Director to order the Examiner to enter and consider the declaration filed on 26 September 2006.

The petition is **DISMISSED AS MOOT**.

37 C.F.R. § 1.114(d) states, in part:

> If an applicant timely files a submission and fee set forth in § 1.17(e), the Office will withdraw the finality of any Office action and the submission will be entered and considered...

37 C.F.R. § 1.181(c) states, in part:

> When a petition is taken from an action or requirement of an examiner in the ex parte prosecution of an application, or in the ex parte or inter partes prosecution of a reexamination proceeding, it may be required that there have been a proper request for reconsideration (§ 1.111) and a repeated action by the examiner...

A review of application file history, it revolves that the declaration dated 26 September 2006 was filed to replace the declaration of 11 April 2006 and was filed after the Final Office action mailed 28 June 2006 and but before the filing of RCE on 27 October 2006. Pursuant to 37 C.F.R. § 1.114(d), the declaration and amendment of 26 September 2006 was entered and considered by the examiner.

Accordingly, the petition of 02 November 2006 is **DISMISSED AS MOOT**. Further, pursuant to 37 C.F.R. § 1.181(c), the petition is hereby **DISMISSED** and treated as a request for

reconsideration of the holding deficiency of the declaration. A delay to render a decision on the petition is hereby regretted.

Any inquiry concerning this decision should be directed to the undersigned whose telephone number is (571) 272-3613.

Vincent N. Trans
Quality Assurance Specialist
(Formerly Special Program Examiner)
Technology Center 2100
Computer Architecture, Software, and
Information Security

UNITED STATES PATENT AND TRADEMARK OFFICE

Commissioner for Patents
United States Patent and Trademark Office
P.O. Box 1450
Alexandria, VA 22313-1450
www.uspto.gov

FREDERICK W. GIBB, III
Gibb & Rahman, LLC
2568-A RIVA ROAD
SUITE 304
ANNAPOLIS MD 21401

**COPY MAILED**

AUG 0 1 2008

**OFFICE OF PETITIONS**

| | | |
|---|---|---|
| In re Application of | : | |
| Agrawal, et al. | : | |
| Application No.: 10/624,069 | : | ON PETITION |
| Filing Date: July 21, 2003 | : | |
| Attorney Docket No. ARC920030034US1 | : | |

This is a decision on the petition under 37 CFR 1.47 filed July 3, 2008, which will be treated as a petition under 37 CFR 1.183 to waive the requirements of 37 CFR 1.131.

The petition is **granted**.

The record reflects that the joint inventors named in subject application executed the declaration required by 37 CFR 1.63, and that the executed declaration was filed on July 21, 2003. Petitioner now files the instant petition under 37 CFR 1.47(a) because one of the joint inventors has constructively refused to sign the declaration under 37 CFR 1.131. Petitioner requests that the declaration under 37 CFR 1.131 be accepted without the signature of inventor Agrawal.

It is noted that the provisions of 37 CFR 1.47 only apply to the execution of the original oath or declaration under 37 CFR 1.63. A petition under 37 CFR 1.47 is not appropriate in this case because the joint inventors executed the original declaration. Relief can be granted, pursuant to 37 CFR 1.183, by the waiver or suspension of the requirements of 37 CFR 1.131 as to inventor Agrawal.

37 CFR 1.183 permits, in an extraordinary situation, waiver of a rule which is not a requirement of the statute, where justice requires such waiver, and applicant has requested a waiver of the requirement that the 37 CFR 1.131(b)(1) declaration be signed by all the joint inventors.

The instant petition is accompanied by an appropriate showing that inventor Agrawal has refused to execute the declaration under 37 CFR 1.131. Accordingly, the declaration of July 3, 2008, signed by inventors Evfimievski and Srikant, will be accepted as though it was signed by joint inventors Evfimievski, Srikant, and Agrawal as required by 37 CFR 1.131.

The fee for the petition under 37 CFR 1.183 is $400.00 as per 37 CFR 1.183 and 1.17(f). Deposit account 09-0441 will be charged an additional $200.00, accordingly.

The application file will be forwarded to Technology Center 2100, GAU 2161 for further processing.

Telephone inquiries regarding this matter should be directed to the undersigned at (571) 272-3222.

Kenya A. McLaughlin

Kenya A. McLaughlin
Petitions Attorney
Office of Petitions

UNITED STATES PATENT AND TRADEMARK OFFICE

COMMISSIONER FOR PATENTS
UNITED STATES PATENT AND TRADEMARK OFFICE
P.O. BOX 1450
ALEXANDRIA, VA 22313-1450
www.uspto.gov

MAIL

AUG 1 0 2004

DIRECTOR OFFICE
TECHNOLOGY CENTER 2600

Bose McKinney & Evans LLP
2700 First Indiana Plaza
135 North Pennsylvania Street
Indianapolis, Indiana 46204

In re Application of
David D. Griner, et al.
Application No. 10/624,077
Filed: July 21, 2003
For: **SYSTEM AND METHOD OF CREATING DIGITAL RECORDINGS OF LIVE PERFORMANCES**

DECISION ON PETITION TO MAKE SPECIAL

This is a decision on the petition filed May 21, 2004 under 37 CFR §1.102(d) (and supplemented on June 18, 2004) to make the application special.

A grantable petition under 37 CFR §1.102(d) and MPEP §708.02, section II (Infringement), must be accompanied by the required fee and a statement alleging:

(1) that there is an infringing device or product actually on the market or method in use;
(2) that a rigid comparison of the alleged infringing device, product, or method with the claims of the application has been made, and that, in his or her opinion, some of the claims are unquestionably infringed; and
(3) that he or she has made or caused to be made a careful and thorough search of the prior art or has a good knowledge of the pertinent prior art.

Further, Applicant must provide a copy of each of the references deemed most closely related to the subject matter encompassed by the claims if the references are not already of record.

Applicant's submission is deficient in that no references have been submitted. As stated, Applicant must provide a copy of each of the references deemed most closely related to the subject matter if the references are not already of record. It is not clear whether the art already submitted within the application is deemed most closely related to the subject matter given that there was no discussion with respect to references within Applicants' petition or the supplement.

Accordingly, the Petition is **DENIED**.

The application file is being forwarded to Central Files to await examination in its proper turn based on its effective filing date. Any request for reconsideration must be filed within two months of the mailing date of this decision.

It is noted that Applicant's petition supplement was for the purpose of clarifying the Assignee information and referencing an alleged submission by Applicants on April 29, 2004. However, there is no record of either Assignee mentioned in the Petition (and supplement) associated with the application. In addition, there is no submission of record for April 29, 2004.

Dwayne D. Bost
Special Program Examiner
Technology Center 2600
Communications
(703) 305-4778

UNITED STATES PATENT AND TRADEMARK OFFICE

COMMISSIONER FOR PATENTS
UNITED STATES PATENT AND TRADEMARK OFFICE
P.O. BOX 1450
ALEXANDRIA, VA 22313-1450
www.uspto.gov

MAIL

MAR 07 2005

DIRECTOR OFFICE
TECHNOLOGY CENTER 2600

BAKER BOTTS L.L.P.
2001 ROSS AVENUE
SUITE 600
DALLAS TX 75201-2980

In re Application of
David D. Griner, et al.
Application No. 10/624,077
Filed: July 21, 2003
For: **SYSTEM AND METHOD OF CREATING DIGITAL RECORDINGS OF LIVE PERFORMANCES**

DECISION ON PETITION TO MAKE SPECIAL

This is a decision on the petition filed May 21, 2004 under 37 CFR §1.102(d), supplemented on June 18, 2004, and supplemented again on August 18, 2004, to make the application special.

A grantable petition under 37 CFR §1.102(d) and MPEP §708.02, section II (Infringement), must be accompanied by the required fee and a statement alleging:

(1) that there is an infringing device or product actually on the market or method in use;
(2) that a rigid comparison of the alleged infringing device, product, or method with the claims of the application has been made, and that, in his or her opinion, some of the claims are unquestionably infringed; and
(3) that he or she has made or caused to be made a careful and thorough search of the prior art or has a good knowledge of the pertinent prior art.

The petitioner has satisfied all the above-listed requirements. Accordingly, the petition is **GRANTED**.

It is noted that the subject application has been allowed and is currently in the issuance process.

Dwayne D. Bost
Special Program Examiner
Technology Center 2600
Communications
(703) 305-4778

UNITED STATES PATENT AND TRADEMARK OFFICE

Commissioner for Patents
United States Patent and Trademark Office
P.O. Box 1450
Alexandria, VA 22313-1450
www.uspto.gov

SHLESINGER FITZSIMMONS & SHLESINGER
SUITE 1323
183 EAST MAIN STREET
ROCHESTER NY 14604

**COPY MAILED**

NOV 29 2007

**OFFICE OF PETITIONS**

| | | |
|---|---|---|
| In re Application of | : | |
| Maurizio Iotti | : | |
| Application No. 10/624,118 | : | ON PETITION |
| Filed: July 21, 2003 | : | |

This is a decision on the petition to revive an unintentionally abandoned application under 37 CFR 1.137(b), filed March 12, 2007.

The petition under 37 CFR 1.137(b) is **GRANTED**.

The above-identified application became abandoned for failure to timely pay the issue fee in response to the Notice of Allowance mailed May 19, 2005. This notice set a statutory period for reply of three (3) months. No issue fee having been received, the application became abandoned on August 20, 2005. The Office mailed a Notice of Abandonment on September 28, 2005.

With the instant petition, applicant paid the petition fee, made the proper statement of unintentional delay, and submitted the required reply in the form of the issue fee.

The matter is being forwarded to the Office of Patent Publication for processing into a patent.

Telephone inquiries related to this decision should be directed to the undersigned at (571)272-3207.

Cliff Congo
Petitions Attorney
Office of Petitions

## SPE RESPONSE FOR CERTIFICATE OF CORRECTION

Paper No.: X

DATE : July 28, 2008

TO SPE OF : ART UNIT 2874

SUBJECT : Request for Certificate of Correction for Appl. No.: 10/624128 Patent No.: 7031574 B2

A response is requested with respect to a request for a certificate of correction.

With respect to the change(s) requested to correct Office and/or Applicant's errors, should the patent read as shown in the certificate of correction attached herewith or the COCIN document(s), in IFW images for the above-identified patented application? No new matter should be introduced, nor should the scope or meaning of the claims be changed.

If the response is for an IFW, within 7 days, please complete and forward the response, to the employee (named below) via scanning into application images, using document code **COCX**.

DO NOT SENT TO ATTORNEY

If the response is for a paper file wrapper, please complete the response and forward the response with the paper file wrapper, to the employee (named below), within 7 days, to:

**Certificates of Correction Branch (CofC)**
**South Tower - 9A22**
**Palm Location 7580**

You can fax the Director's/SPE response to 571-270-9990

*LAMONTE NEWSOME*
**Certificates of Correction Branch**
**703-308-9390 ext. 112**

**Thank You For Your Assistance**

**The request for issuing the above-identified correction(s) is hereby:**
Note your decision on the appropriate box.

- ☑ **Approved** — **All** changes apply.
- ☐ **Approved in Part** — Specify below which changes **do not** apply.
- ☐ **Denied** — State the reasons for denial below.

**Comments:** _____

SPE

2874
Art Unit

U.S. DEPARTMENT OF COMMERCE Patent and Trademark Office

UNITED STATES PATENT AND TRADEMARK OFFICE

Commissioner for Patents
United States Patent and Trademark Office
P.O. Box 1450
Alexandria, VA 22313-1450
www.uspto.gov

PHILIP S. JOHNSON
JOHNSON & JOHNSON
ONE JOHNSON & JOHNSON PLAZA
NEW BRUNSWICK, NJ 08933-7003

**COPY MAILED**

JAN 2 4 2008

**OFFICE OF PETITIONS**

ON PETITION

In re Application of :
Yaron Keidar :
Application No. 10/624,151 :
Filed: July 21, 2003 :
Attorney Docket No. BIO-5015 NP :

This is a decision on the petition under 37 CFR 1.137(b), filed September 21, 2006, to revive the above-identified application.

The petition is **DISMISSED.**

Any request for reconsideration of this decision must be submitted within TWO (2) MONTHS from the mail date of this decision. Extensions of time under 37 CFR 1.136(a) are permitted. The reconsideration request should include a cover letter entitled "**Renewed Petition under 37 CFR 1.137(b)**." This is **not** final agency action within the meaning of 5 U.S.C. § 704.

A grantable petition under 37 CFR 1.137(b) must be accompanied by: (1) the required reply, unless previously filed; (2) the petition fee as set forth in 37 CFR 1.17(m); (3) a statement that the entire delay in filing the required reply from the due date for the reply until the filing of a grantable petition pursuant to 37 CFR 1.137(b) was unintentional; and (4) any terminal disclaimer (and fee as set forth in 37 CFR 1.20(d)) required by 37 CFR 1.137(c). Where there is a question as to whether either the abandonment or the delay in filing a petition under 37 CFR 1.137 was unintentional, the Commissioner may require additional information. See MPEP 711.03(c)(III)(C) and (D). The instant petition lack(s) item(s) (1).

A petition to revive cannot be granted where there is an outstanding requirement(s). The above-identified application became abandoned for failure to submit the Issue fee and Publication fee in a timely manner in reply to the Notice of Allowance mailed June 15, 2005, which set a statutory period for reply of three (3) months. Accordingly, the above-identified application became abandoned on September 16, 2005. Accordingly, the petition to revive cannot be granted until the $1440 Issue fee and $300 Publication fee is received.

Further correspondence with respect to this matter should be addressed as follows:

| | |
|---|---|
| By mail: | Mail Stop PETITION<br>Commissioner for Patents<br>Post Office Box 1450<br>Alexandria, VA 22313-1450 |
| By hand: | Customer Service Window<br>Randolph Building<br>401 Dulany Street<br>Alexandria, VA 22314 |
| By facsimile: | (571) 273-8300<br>ATTN: Office of Petitions |

Telephone inquiries concerning this decision should be directed to the undersigned at (571) 272-3210.

Irvin Dingle
Petitions Examiner
Office of Petitions

UNITED STATES PATENT AND TRADEMARK OFFICE

Commissioner for Patents
United States Patent and Trademark Office
P.O. Box 1450
Alexandria, VA 22313-1450
www.uspto.gov

PHILIP S. JOHNSON
JOHNSON & JOHNSON
ONE JOHNSON & JOHNSON PLAZA
NEW BRUNSWICK, NJ 08933-7300

**COPY MAILED**

SEP 29 2008

**OFFICE OF PETITIONS**

| | | |
|---|---|---|
| In re Application of | : | |
| Yaron Keidar | : | |
| Application No. 10/624,151 | : | ON PETITION |
| Filed: July 21, 2003 | : | |
| Attorney Docket No. BIO-5015 NP | : | |

This is a decision on the renewed petition filed April 22, 2008 under 37 CFR 1.137(b), to revive the above-identified application.

The petition is **GRANTED.**

Telephone inquiries concerning this decision should be directed to the undersigned at (571) 272-3210.

This matter is being referred to the Publishing Division for further processing.

Irvin Dingle
Petitions Examiner
Office of Petitions

UNITED STATES PATENT AND TRADEMARK OFFICE

Commissioner for Patents
United States Patent and Trademark Office
P.O. Box 1450
Alexandria, VA 22313-1450
www.uspto.gov

**PHILIP S. JOHNSON**
**JOHNSON & JOHNSON**
**ONE JOHNSON & JOHNSON PLAZA**
**NEW BRUNSWICK NJ 08933-7003**

COPY MAILED

NOV 1 4 2008

OFFICE OF PETITIONS

| | | |
|---|---|---|
| In re Application of | : | |
| Yaron Keidar | : | |
| Application No. 10/624,151 | : | DECISION GRANTING PETITION |
| Filed: July 21, 2003 | : | UNDER 37 CFR 1.313(c)(2) |
| Attorney Docket No. BIO-5015 NP | : | |

This is a decision on the petition under 37 CFR 1.313(c)(2), filed October 16, 2008, to withdraw the above-identified application from issue after payment of the issue fee.

The petition is **GRANTED**.

The above-identified application is withdrawn from issue for consideration of a submission under 37 CFR 1.114 (request for continued examination). *See* 37 CFR 1.313(c)(2).

***Petitioner is advised that the issue fee paid on April 22, 2008 cannot be refunded. If, however, this application is again allowed, petitioner may request that it be applied towards the issue fee required by the new Notice of Allowance.***[1]

Telephone inquiries should be directed to the undersigned at (571) 272-3208.

This application is being referred to Technology Center AU 3739 for processing of the request for continued examination under 37 CFR 1.114 and for consideration of the concurrently filed IDS.

/Karen Creasy/
Karen Creasy
Petitions Examiner
Office of Petitions

---

[1] *The request to apply the issue fee to the new Notice may be satisfied by completing and returning the new Part B – Fee(s) Transmittal Form (along with any balance due at the time of submission). Petitioner is advised that the Issue Fee Transmittal Form* ***must*** *be completed and timely submitted to avoid abandonment of the application.*

0

Docket No. BIO 5015NP

**CERTIFICATE OF EFS TRANSMISSION**

I hereby certify that this paper (along with any paper referred to as being attached or enclosed) is being transmitted to the United States Patent and Trademark Office on the date shown below via the "Electronic Filing System" in accordance with 37 C.F.R. § 1.6(a)(4).

| Vincent J. Serrao | /Vincent J. Serrao/ | October 16, 2008 |
|---|---|---|
| Type or print name | Signature | Date |

**IN THE UNITED STATES PATENT AND TRADEMARK OFFICE**

Applicants : Yaron Keidar Confirmation No. 5652

Serial No. : 10/624,151 Art Unit: 3739

Filed : July 21, 2003 Examiner: Vrettakos, Peter

For : Ablation Device with Spiral Array Ultrasound Transducer

Commissioner for Patents
Box RCE
P.O. Box 1450
Alexandria, VA 22313-1450

Dear Sirs:

Applicant hereby petitions for withdrawal of the above-referenced application from issuance. Please charge the appropriate fee pursuant to 37 CFR §1.17(h) to Johnson & Johnson Deposit Account No. 10-0750/BIO-5015USNP/VJS.

The issue fee for the above-identified application was submitted via facsimile April 22, 2008.

The documents listed on Form PTO-1449 & MPEP609D came to the Applicant's attention. Applicant requests continued examination of the application under 37 CFR §1.114 and authorize the payment of any fee pursuant to 38 CFR § 1.17(e) to Johnson & Johnson Deposit Account No. 10-0750/BIO-5015USNP/VJS.

Adjustment date: 11/14/2008 CKHLOK
10/16/2008 INTEFSW 00006748 100750 10624151
02 FC:1808 130.00 CR

11/14/2008 CKHLOK 00000002 100750 10624151
01 FC:1464 130.00 DA

An Information Disclosure Statement is submitted herewith in accordance with 37 CFR §1.114(b).

Please withdraw the above-referenced application from issuance so that the Information Disclosure Statement may be considered in a Request for Continued Examination.

Respectfully submitted,

/Vincent J. Serrao/
Vincent J. Serrao, Reg. # 47,072
Attorney for Applicants

Johnson & Johnson
One Johnson & Johnson Plaza
New Brunswick, NJ 08933-7003
(732) 524-1163
DATED: October 16, 2008

UNITED STATES PATENT AND TRADEMARK OFFICE

Commissioner for Patents
United States Patent and Trademark Office
P.O. Box 1450
Alexandria, VA 22313-1450
www.uspto.gov

Paper No.

MYERS BIGEL SIBLEY & SAJOVEC
PO BOX 37428
RALEIGH NC 27627

COPY MAILED

APR 2 9 2004

OFFICE OF PETITIONS

| | | |
|---|---|---|
| In re Application of | : | |
| Duane Firman | : | |
| Application No. 10/624,160 | : | DECISION GRANTING |
| Filed: July 21, 2003 | : | PETITION |
| Attorney Docket No. 9400-32 | : | |

This is a decision on the "PETITION TO ACCORD THE PROPER FILING DATE," filed April 5, 2004, requesting that the above-identified application be accorded a filing date of July 21, 2003, rather than the presently accorded filing date of July 22, 2003.

Petitioner maintains that on July 21, 2003, the application was deposited as "Express Mail" in the U.S. Postal Service. In support thereof, applicant submits, inter alia, a transmittal letter specifically identifying the papers being filed therewith and noting thereon the Express Mail mailing label No. "EV318421245US"; a copy of the Express Mail mailing label; and a copy of petitioner's filing receipt.

The evidence supports a conclusion that the instant petition was filed promptly within the meaning of § 1.10(c)(1). The transmittal specifically identifies the papers being filed, was in fact received with the application papers, and bears the Express Mail mailing label number. Thus, petitioner has shown that the "Express Mail" mailing label number "EV318421245US" was placed on the papers prior to the original mailing.

A review of the "Express Mail" mailing label reveals that it bears both a handwritten date-in of July 22, 2003 and a USPS postmark of July 21, 2003. The Official USPS postmark corroborates petitioner's claim that the application papers were deposited in Express Mail service on July 21, 2003.

In view thereof, the petition is GRANTED.

No petition fee is required.

The Office of Initial Patent Examination (OIPE) has been directed, pursuant to this decision, to **correct the filing date to July 21, 2003**.

Telephone inquires related to this decision may be directed to the undersigned at (703) 305-0309.

Nancy Johnson
Senior Petitions Attorney
Office of Petitions

BEST AVAILABLE COPY

PTO/SB/05 (03-01)
Approved for use through 10/31/2002. OMB 0651-0032
U.S. Patent and Trademark Office; U.S. DEPARTMENT OF COMMERCE

Please type a plus sign (+) inside this box → [+]

Under the Paperwork Reduction Act of 1995, no persons are required to respond to a collection of information unless it displays a valid OMB control number.

08306 U.S. PTO
10/624170
07/21/03

# UTILITY PATENT APPLICATION TRANSMITTAL

(Only for new nonprovisional applications under 37 CFR 1.53(b))

| | |
|---|---|
| Attorney Docket No. | 1554/SYMBP152US |
| First Inventor | Raj Bridgelall |
| Title | ARCHITECTURE FOR SECURE REVERSE... |
| Express Mail Label No. | EV330021237US |

## APPLICATION ELEMENTS

See MPEP chapter 600 concerning utility patent application contents.

ADDRESS TO: Assistant Commissioner for Patents
Box Patent Application
Washington, DC 20231

1. [✓] Fee Transmittal Form (e.g., PTO/SB/17) *(Submit an original and a duplicate for fee processing)*
2. [ ] Applicant claims small entity status. See 37 CFR 1.27.
3. [✓] Specification [*Total Pages* 49 ] *(preferred arrangement set forth below)*
   - Descriptive title of the invention
   - Cross Reference to Related Applications
   - Statement Regarding Fed sponsored R & D
   - Reference to sequence listing, a table, or a computer program listing appendix
   - Background of the Invention
   - Brief Summary of the Invention
   - Brief Description of the Drawings *(if filed)*
   - Detailed Description
   - Claim(s)
   - Abstract of the Disclosure
4. [✓] Drawing(s) *(35 U.S.C. 113)* [ *Total Sheets* 9 ]
5. Oath or Declaration [ *Total Pages* 3 ]
   a. [✓] Newly executed (original or copy)
   b. [ ] Copy from a prior application (37 CFR 1.63 (d)) *(for continuation/divisional with Box 18 completed)*
      i. [ ] DELETION OF INVENTOR(S) Signed statement attached deleting inventor(s) named in the prior application, see 37 CFR 1.63(d)(2) and 1.33(b).
6. [ ] Application Data Sheet. See 37 CFR 1.76
7. [ ] CD-ROM or CD-R in duplicate, large table or Computer Program *(Appendix)*
8. Nucleotide and/or Amino Acid Sequence Submission *(if applicable, all necessary)*
   a. [ ] Computer Readable Form (CRF)
   b. Specification Sequence Listing on:
      i. [ ] CD-ROM or CD-R (2 copies); or
      ii. [ ] paper
   c. [ ] Statements verifying identity of above copies

## ACCOMPANYING APPLICATION PARTS

9. [✓] Assignment Papers (cover sheet & document(s))
10. [ ] 37 CFR 3.73(b) Statement *(when there is an assignee)* [✓] Power of Attorney
11. [ ] English Translation Document *(if applicable)*
12. [ ] Information Disclosure Statement (IDS)/PTO-1449 [ ] Copies of IDS Citations
13. [ ] Preliminary Amendment
14. [✓] Return Receipt Postcard (MPEP 503) *(Should be specifically itemized)*
15. [ ] Certified Copy of Priority Document(s) *(if foreign priority is claimed)*
16. [✓] Nonpublication Request under 35 U.S.C. 122 (b)(2)(B)(i). Applicant must attach form PTO/SB/35 or its equivalent.
17. [✓] Other: Express Mail Certificate

18. If a CONTINUING APPLICATION, *check appropriate box, and supply the requisite information below and in a preliminary amendment, or in an Application Data Sheet under 37 CFR 1.76:*

[ ] Continuation [ ] Divisional [ ] Continuation-in-part (CIP) of prior application No.: _____/_____

*Prior application information:* *Examiner* _____ *Group Art Unit:* _____

**For CONTINUATION OR DIVISIONAL APPS only: The entire disclosure of the prior application, from which an oath or declaration is supplied under Box 5b, is considered a part of the disclosure of the accompanying continuation or divisional application and is hereby incorporated by reference. The incorporation can only be relied upon when a portion has been inadvertently omitted from the submitted application parts.**

## 19. CORRESPONDENCE ADDRESS

[✓] *Customer Number or Bar Code Label* 23623 *(Insert Customer No. or Attach bar code label here)* or [ ] *Correspondence address below*

| | | | | | |
|---|---|---|---|---|---|
| Name | Amin & Turocy, LLP | | | | |
| Address | 24th Floor, National City Center<br>1900 East 9th Street | | | | |
| City | Cleveland | State | Ohio | Zip Code | 44114 |
| Country | | Telephone | 216-696-8730 | Fax | 216-696-8731 |

| | | | |
|---|---|---|---|
| Name (Print/Type) | Himanshu S. Amin | Registration No. (Attorney/Agent) | 40,894 |
| Signature | | Date | July 21, 2003 |

Burden Hour Statement: This form is estimated to take 0.2 hours to complete. Time will vary depending upon the needs of the individual case. Any comments on the amount of time you are required to complete this form should be sent to the Chief Information Officer, U.S. Patent and Trademark Office, Washington, DC 20231. DO NOT SEND FEES OR COMPLETED FORMS TO THIS ADDRESS. SEND TO: Assistant Commissioner for Patents, Box Patent Application, Washington, DC 20231.

17235 U.S. PTO
07/21/03

PTO/SB/17 (01-03)
Approved for use through 04/30/2003. OMB 0651-0032
U.S. Patent and Trademark Office; U.S. DEPARTMENT OF COMMERCE
Under the Paperwork Reduction Act of 1995, no persons are required to respond to a collection of information unless it displays a valid OMB control number.

# FEE TRANSMITTAL for FY 2003

*Effective 01/01/2003. Patent fees are subject to annual revision.*

☐ Applicant claims small entity status. See 37 CFR 1.27

**TOTAL AMOUNT OF PAYMENT** ($) 2,764.00

| *Complet if Kn wn* | |
|---|---|
| Application Number | |
| Filing Date | Herewith |
| First Named Inventor | Raj Bridgelall |
| Examiner Name | |
| Art Unit | |
| Attorney Docket No. | 1554/SYMBP152US |

## METHOD OF PAYMENT *(check all that apply)*

☐ Check ☐ Credit card ☐ Money Order ☐ Other ☐ None

☑ Deposit Account:

Deposit Account Number: 50-1063

Deposit Account Name: Amin & Turocy, LLP

**The Commissioner is authorized to:** *(check all that apply)*

☑ Charge fee(s) indicated below ☑ Credit any overpayments

☑ Charge any additional fee(s) during the pendency of this application

☐ Charge fee(s) indicated below, **except for the filing fee** to the above-identified deposit account.

## FEE CALCULATION

### 1. BASIC FILING FEE

| Large Entity Fee Code | Large Entity Fee ($) | Small Entity Fee Code | Small Entity Fee ($) | Fee Description | Fee Paid |
|---|---|---|---|---|---|
| 1001 | 750 | 2001 | 375 | Utility filing fee | 750.00 |
| 1002 | 330 | 2002 | 165 | Design filing fee | |
| 1003 | 520 | 2003 | 260 | Plant filing fee | |
| 1004 | 750 | 2004 | 375 | Reissue filing fee | |
| 1005 | 160 | 2005 | 80 | Provisional filing fee | |

**SUBTOTAL (1)** ($) 750.00

### 2. EXTRA CLAIM FEES FOR UTILITY AND REISSUE

| | | Extra Claims | | Fee from below | Fee Paid |
|---|---|---|---|---|---|
| Total Claims | 111 | -20** = 91 | x | 18.00 | = 1,638.00 |
| Independent Claims | 7 | - 3** = 4 | x | 84.00 | = 336.00 |
| Multiple Dependent | | | | | = |

| Large Entity Fee Code | Large Entity Fee ($) | Small Entity Fee Code | Small Entity Fee ($) | Fee Description |
|---|---|---|---|---|
| 1202 | 18 | 2202 | 9 | Claims in excess of 20 |
| 1201 | 84 | 2201 | 42 | Independent claims in excess of 3 |
| 1203 | 280 | 2203 | 140 | Multiple dependent claim, if not paid |
| 1204 | 84 | 2204 | 42 | ** Reissue independent claims over original patent |
| 1205 | 18 | 2205 | 9 | ** Reissue claims in excess of 20 and over original patent |

**SUBTOTAL (2)** ($) 1,974.00

***or number previously paid, if greater; For Reissues, see above*

## FEE CALCULATION (continued)

### 3. ADDITIONAL FEES

| Large Entity Fee Code | Large Entity Fee ($) | Small Entity Fee Code | Small Entity Fee ($) | Fee Description | Fee Paid |
|---|---|---|---|---|---|
| 1051 | 130 | 2051 | 65 | Surcharge - late filing fee or oath | |
| 1052 | 50 | 2052 | 25 | Surcharge - late provisional filing fee or cover sheet | |
| 1053 | 130 | 1053 | 130 | Non-English specification | |
| 1812 | 2,520 | 1812 | 2,520 | For filing a request for *ex parte* reexamination | |
| 1804 | 920* | 1804 | 920* | Requesting publication of SIR prior to Examiner action | |
| 1805 | 1,840* | 1805 | 1,840* | Requesting publication of SIR after Examiner action | |
| 1251 | 110 | 2251 | 55 | Extension for reply within first month | |
| 1252 | 410 | 2252 | 205 | Extension for reply within second month | |
| 1253 | 930 | 2253 | 465 | Extension for reply within third month | |
| 1254 | 1,450 | 2254 | 725 | Extension for reply within fourth month | |
| 1255 | 1,970 | 2255 | 985 | Extension for reply within fifth month | |
| 1401 | 320 | 2401 | 160 | Notice of Appeal | |
| 1402 | 320 | 2402 | 160 | Filing a brief in support of an appeal | |
| 1403 | 280 | 2403 | 140 | Request for oral hearing | |
| 1451 | 1,510 | 1451 | 1,510 | Petition to institute a public use proceeding | |
| 1452 | 110 | 2452 | 55 | Petition to revive - unavoidable | |
| 1453 | 1,300 | 2453 | 650 | Petition to revive - unintentional | |
| 1501 | 1,300 | 2501 | 650 | Utility issue fee (or reissue) | |
| 1502 | 470 | 2502 | 235 | Design issue fee | |
| 1503 | 630 | 2503 | 315 | Plant issue fee | |
| 1460 | 130 | 1460 | 130 | Petitions to the Commissioner | |
| 1807 | 50 | 1807 | 50 | Processing fee under 37 CFR 1.17(q) | |
| 1806 | 180 | 1806 | 180 | Submission of Information Disclosure Stmt | |
| 8021 | 40 | 8021 | 40 | Recording each patent assignment per property (times number of properties) | 40.00 |
| 1809 | 750 | 2809 | 375 | Filing a submission after final rejection (37 CFR 1.129(a)) | |
| 1810 | 750 | 2810 | 375 | For each additional invention to be examined (37 CFR 1.129(b)) | |
| 1801 | 750 | 2801 | 375 | Request for Continued Examination (RCE) | |
| 1802 | 900 | 1802 | 900 | Request for expedited examination of a design application | |

Other fee (specify) _____

*Reduced by Basic Filing Fee Paid

**SUBTOTAL (3)** ($) 40.00

| SUBMITTED BY | | | | (Complete *(if applicable)* | |
|---|---|---|---|---|---|
| *Name (Print/Type)* | Himanshu S. Amin | *Registration No. (Attorney/Agent)* | 40,894 | *Telephone* 216-696-8730 | |
| *Signature* | | | | *Date* | July 21 , 2003 |

**WARNING: Information on this form may become public. Credit card information should not be included on this form. Provide credit card information and authorization on PTO-2038.**

This collection of information is required by 37 CFR 1.17 and 1.27. The information is required to obtain or retain a benefit by the public which is to file (and by the USPTO to process) an application. Confidentiality is governed by 35 U.S.C. 122 and 37 CFR 1.14. This collection is estimated to take 12 minutes to complete, including gathering, preparing, and submitting the completed application form to the USPTO. Time will vary depending upon the individual case. Any comments on the amount of time you require to complete this form and/or suggestions for reducing this burden, should be sent to the Chief Information Officer, U.S. Patent and Trademark Office, U.S. Department of Commerce, Washington, DC 20231. DO NOT SEND FEES OR COMPLETED FORMS TO THIS ADDRESS. **SEND TO: Commissioner for Patents, Washington, DC 20231.**

*If you need assistance in completing the form, call 1-800-PTO-9199 (1-800-786-9199) and select option 2.*

PTO/SB/35 (11-00)
Approved for use through 10/31/2002. OMB 0651-0031
U.S. Patent and Trademark Office; U. S. DEPARTMENT OF COMMERCE
Under the Paperwork Reduction Act of 1995, no persons are required to respond to a collection of information unless it displays a valid OMB control number.

| REQUEST AND CERTIFICATION UNDER 35 U.S.C. 122(b)(2)(B)(i) | First Named Inventor | Raj Bridgelall |
|---|---|---|
| | Title | ARCHITECTURE FOR SECURE REVERSE... |
| | Atty Docket Number | 1554/SYMBP152US |

I hereby certify that the invention disclosed in the attached application **has not and will not be** the subject of an application filed in another country, or under a multilateral agreement, that requires publication at eighteen months after filing. I hereby request that the attached application not be published under 35 U.S.C. 122(b).

July 21 , 2003
Date

Signature

Himanshu S. Amin, Reg. No. 40,894
Typed or printed name

This request must be signed in compliance with 37 CFR 1.33(b) and submitted with the application **upon filing.**

Applicant may rescind this nonpublication request at any time. If applicant rescinds a request that an application not be published under 35 U.S.C. 122(b), the application will be scheduled for publication at eighteen months from the earliest claimed filing date for which a benefit is claimed.

If applicant subsequently files an application directed to the invention disclosed in the attached application in another country, or under a multilateral international agreement, that requires publication of applications eighteen months after filing, the applicant **must** notify the United States Patent and Trademark Office of such filing within forty-five (45) days after the date of the filing of such foreign or international application. **Failure to do so will result in abandonment of this application (35 U.S.C. 122(b)(2)(B)(iii)).**

Burden Hour Statement: This collection of information is required by 37 CFR 1.213(a). The information is used by the public to request that an application not be published under 35 U.S.C. 122(b) (and the PTO to process that request). Confidentiality is governed by 35 U.S.C. 122 and 37 CFR 1.14. This form is estimated to take 6 minutes to complete. This time will vary depending upon the needs of the individual case. Any comments on the amount of time you are required to complete this form should be sent to the Chief Information Officer, U.S. Patent and Trademark Office, Washington, DC 20231. DO NOT SEND FEES OR COMPLETED FORMS TO THIS ADDRESS. SEND TO: Assistant Commissioner for Patents, Washington, DC 20231.

UNITED STATES PATENT AND TRADEMARK OFFICE

Commissioner for Patents
United States Patent and Trademark Office
P.O. Box 1450
Alexandria, VA 22313-1450
www.uspto.gov

COPY MAILED

SEP 1 0 2009

OFFICE OF PETITIONS

FAY SHARPE LLP
1228 EUCLID AVENUE, 5TH FLOOR
THE HALLE BUILDING
CLEVELAND, OH 44115

In re Application of
Philip W. Dalrymple, III, et al.
Application No. 10/624,195
Filed: July 22, 2003
Attorney Docket No. MDTI 2 00001 US

ON PETITION

This is a decision in response to the petition, filed June 24, 2009, to revive the above-identified application under the provisions of 37 CFR 1.137(b).

The petition is **GRANTED**.

The application became abandoned for failure to reply in a timely manner to the non-final Office action mailed October 7, 2008, which set a shortened statutory period for reply of three (3) months. No extension of time under the provisions of 37 CFR 1.136(a) was obtained. Accordingly, the application became abandoned on January 8, 2009. A Notice of Abandonment was mailed on April 13, 2009. On June 24, 2009, the present petition was filed.

The petition satisfies the conditions for revival pursuant to the provisions of 37 CFR 1.137(b) in that petitioner has supplied (1) a proposed reply in the form of an amendment; (2) the petition fee of $1,620; and (3) an adequate statement of unintentional delay.

The application is being referred to Technology Center AU 2194 for appropriate action by the Examiner in the normal course of business on the response filed June 24, 2009.

Telephone inquiries concerning this decision should be directed to the undersigned at (571) 272-3204. Inquiries relating to further prosecution should be directed to the Technology Center.

Sherry D. Brinkley
Petitions Examiner
Office of Petitions

UNITED STATES PATENT AND TRADEMARK OFFICE

COMMISSIONER FOR PATENTS
UNITED STATES PATENT AND TRADEMARK OFFICE
P.O. BOX 1450
ALEXANDRIA, VA 22313-1450
www.uspto.gov

MAILED

JUN 2 2004

Office of the Director
Group 3600

GRANT R. CLAYTON
CLAYTON HOWARTH & CANNON, PC
P.O. BOX 1909
Sandy, UT 84091-1909

In re application of
Bibian J. Rendon
Application No. 10/624,205
Filed: July 21, 2003
For: VEHICULAR PERMIT DISPLAY

**DECISION ON PETITION TO MAKE SPECIAL (APPLICANT'S AGE)**

This is a decision on the petition submitted on July 21, 2003 under 37 CFR 1.102 (c) to make the above-identified application special under the accelerated examination procedure set forth in MPEP 708.02, Section IV: Applicant's Age.

The petition is **GRANTED**.

An application may be accorded special status upon the filing of a petition providing evidence showing that the applicant is at least 65 years old. Such a showing may be provided by evidence such as a birth certificate or a statement from the applicant.

The evidence submitted with the petition is a statement signed by Mr. Rendon indicating that he is at least 65 years of age.

The examiner is directed (1) to make an interference search for possible interfering applications, (2) to promptly examine this application out of turn, and (3) if any interfering application is discovered, to examine such application simultaneously and state in the first official letter of such application that it is being taken out of turn because of a possible interference.

Petitioner is advised that this application will continue to be special, throughout its entire prosecution and pendency, including interference or appeal, if any, only if petitioner makes a prompt ***bona fide*** effort, in response to each Office action, to place the application in condition for allowance, even if it is necessary to conduct an interview with the examiner to accomplish this purpose.

**SUMMARY**: Petition to Make Special **GRANTED**.

Kenneth Dorner
Special Programs Examiner
Technology Center 3600
(703) 308-0866

pav: 5/22/04

## SPE RESPONSE FOR CERTIFICATE OF CORRECTION

Paper No.: _____

DATE : 2/7/07

TO SPE OF : ART UNIT 2133

SUBJECT : Request for Certificate of Correction on Patent No.: 7103824

A response is requested with respect to the accompanying request for a certificate of correction.

Please complete this form and return with file, within 7 days to:
Palm location **7580, Certificates of Correction Branch – South Tower – 9A22**
If response is for an IFW, **return to employee (named below) via PUBSCofC Team in MADRAS.**
With respect to the change(s) requested, correcting Office and/or Applicant's errors, should the patent read as shown in the certificate of correction (COCIN)? No new matter should be introduced, nor should the scope or meaning of the claims be changed.

Valerie Jackson

**Thank You For Your Assistance**

**Certificates of Correction Branch**
***Tel. No. 703-308-9390 ext. 114***

**The request for issuing the above-identified correction(s) is hereby:**
Note your decision on the appropriate box.

- ☑ **Approved** — **All** changes apply.
- ☐ **Approved in Part** — Specify below which changes **do not** apply.
- ☐ **Denied** — State the reasons for denial below.

**Comments:**

OK to enter

JACQUES LOUIS-JACQUES
SUPERVISORY PATENT EXAMINER
TECHNOLOGY CENTER 2100

**SPE**

2112
**Art Unit**

## SPE RESPONSE FOR CERTIFICATE OF CORRECTION

**Paper No**.:20080721

**DATE** : August 12, 2008

**TO SPE OF** : ART UNIT 2112 (formally 2133)

**SUBJECT** : Request for Certificate of Correction on Patent No.: 7,103,824

A response is requested with respect to the accompanying request for a certificate of correction.

Please complete this form and return with file, within **7** days to:
**Certificates of Correction Branch - PK 3-910**
Palm location **7590** - Tel. No. 305-8201

With respect to the change(s) requested, correcting Office and/or Applicant's errors, should the patent read as shown in the certificate of correction? No new matter should be introduced, nor should the scope or meaning of the claims be changed.

**Thank You For Your Assistance** **Certificates of Correction Branch**

**The request for issuing the above-identified correction(s) is hereby:**
Note your decision on the appropriate box.

☒ **Approved** **All** changes apply.

☐ **Approved in Part** Specify below which changes **do not** apply.

☐ **Denied** State the reasons for denial below.

**Comments:**

All changes are approved.
This approval is on behalf of SPE Jacques Louis-Jacques of AU 2112

**SPE:** /Gilberto Barron Jr./ **Art Unit** 2132

UNITED STATES PATENT AND TRADEMARK OFFICE

Commissioner for Patents
United States Patent and Trademark Office
P.O. Box 1450
Alexandria, VA 22313-1450
www.uspto.gov

STEVEN G. K. LEE
CHEVRON TEXACO CORPORATION
P.O. BOX 6006
SAN FAMON CA 94583-0806

COPY MAILED

JUL 16 2007

OFFICE OF PETITIONS

| | | |
|---|---|---|
| In re Application of | : | |
| Pierre Tequi et al | : | |
| Application No. 10/624,240 | : | DECISION GRANTING PETITION |
| Filed: July 22, 2003 | : | UNDER 37 CFR 1.137(b) |
| Attorney Docket No. T-6119 | : | |

This is a decision on the petition under 37 CFR 1.137(b), filed February 20, 2007, to revive the above-identified application.

The petition is **GRANTED**.

The petition satisfies the conditions for revival pursuant to the provisions of 37 CFR 1.137(b) in that (1) the reply in the form of an RCE and an amendment; (2) the petition fee; and (3) the required statement of unintentional delay have been received. Accordingly, the reply to the Final Rejection of July 14, 2006, is accepted as having been unintentionally delayed.

Telephone inquiries concerning this decision should be directed to the undersigned at (571) 272-3208.

This matter is being referred to Technology Center AU 1714.

Karen Creasy

Karen Creasy
Petitions Examiner
Office of Petitions

UNITED STATES PATENT AND TRADEMARK OFFICE

Commissioner for Patents
United States Patent and Trademark Office
P.O. Box 1450
Alexandria, VA 22313-1450
www.uspto.gov

Steven G.K. Lee
Chevron Texaco Corporation
P.O. Box 6006
San Ramon CA 94583-0806

COPY MAILED

JAN 17 2008

OFFICE OF PETITIONS

| | | |
|---|---|---|
| In re Application of | : | |
| TEQUI et al. | : | |
| Application No. 10/624,240 | : | DECISION ON PETITION |
| Filed: 07/22/2003 | : | |
| Attorney Docket No. T-6119 | : | |

This is a decision on the "PETITION UNDER 37 C.F.R. § 1.182 TO WITHDRAW RECORDED TERMINAL DISCLAIMER," filed December 4, 2007.

Applicant requests that the Office withdraw the terminal disclaimer filed April 27, 2006. As the examiner has concurred, the requested relief can be favorably considered. Accordingly, the petition is **granted**.

There is no indication that practitioner, Dale L. Rieger, was ever empowered to prosecute the instant application. If petitioner desires to receive future correspondence regarding this application, the appropriate power of attorney documentation and change of correspondence address must be submitted. A courtesy copy of this decision will be mailed to petitioner at the address indicated in the petition. However, all future correspondence will be directed to the address of record until such time as appropriate instructions are received to the contrary.

This matter is being referred to the Office of Patent Publication for issuance of a patent.

Telephone inquiries regarding this decision should be directed to the undersigned at (571) 272-3211.

Christina T. Donnell

Christina Tartera Donnell
Senior Petitions Attorney
Office of Petitions

Cc: Dale L. Rieger
JONES DAY
222 East 41st Street
New York, NY 10017-6702

UNITED STATES PATENT AND TRADEMARK OFFICE

Commissioner for Patents
United States Patent and Trademark Office
P.O. Box 1450
Alexandria, VA 22313-1450
www.uspto.gov

**SHEMWELL MAHAMEDI LLP**
**4880 STEVENS CREEK BOULEVARD**
**SUITE 201**
**SAN JOSE, CA 95129**

COPY MAILED
OCT 1 3 2006
OFFICE OF PETITIONS

| | | |
|---|---|---|
| In re Application of<br>Sashikanth Chandrasekaran<br>Application No. 10/624,242<br>Filed: July 21, 2003<br>Attorney Docket No. ORCL.P102 | :<br>:<br>:<br>:<br>: | DECISION ON PETITION<br>TO WITHDRAW<br>FROM RECORD |

This is a decision on the Request to Withdraw as attorney or agent of record under 37 C.F.R. § 1.36(b), filed October 13, 2005.

The petition is **NOT APPROVED.**

A review of the file record indicates that the power of attorney to Charles E. Shemwell, along with all of the other attorneys associated with customer no. 30554, has been revoked by the assignee of the patent application. Accordingly, the request to withdraw under 37 C.F.R. §1.36(b) is **moot.**

All future communications from the Office will be directed to the below-listed address of record until otherwise notified by applicant.

This application is being referred to the Office of Initial Patent Examination.

Telephone inquiries concerning this decision should be directed to Karen Creasy at 571-272- 3208.

Karen Creasy
Petitions Examiner
Office of Petitions

cc:

**HICKMAN PALERMO TRUONG &**
**BECKER/ORACLE**
**2055 GATEWAY PLACE**
**SUITE 550**
**SAN JOSE CA 95110-1089**

UNITED STATES PATENT AND TRADEMARK OFFICE

Commissioner for Patents
United States Patent and Trademark Office
P.O. Box 1450
Alexandria, VA 22313-1450
www.uspto.gov

**ROCKWELL COLLINS, INC.**
**ATTENTION: KYLE EPPELE**
**M/S 124-323**
**400 COLLINS RD. NE**
**CEDAR RAPIDS, IA 52498**

COPY MAILED

AUG 15 2008

| | | |
|---|---|---|
| In re Application of | : | |
| Kronfeld, et. al. | : | |
| Application No. 10/624,244 | : | DECISION ON PETITION |
| Filed: July 22, 2003 | : | |
| Attorney Docket No. 03CR149/KE | : | |

This is a decision on the petition under the unintentional provisions of 37 CFR 1.137(b), filed January 3, 2008, to revive the above-identified application.

The petition is **GRANTED**.

This application became abandoned for failure to timely pay the issue fee on or before August 21, 2007, as required by the Notice of Allowance and Fee(s) Due, mailed May 21, 2007. Accordingly, the date of abandonment of this application is August 22, 2007. A Notice of Abandonment was mailed September 13, 2007.

The petition satisfies the requirements of 37 CFR 1.137(b) in that petitioner has supplied (1) the reply in the form of payment of the issue fee of $1440, (2) the petition fee of $1540 ; and (3) a proper statement of unintentional delay.

Telephone inquiries concerning this decision should be directed to Alicia Kelley at (571) 272-6059.

This application is being referred to the Office of Data Management for processing into a patent.

Sherry D. Brinkley
Petitions Examiner
Office of Petitions

UNITED STATES PATENT AND TRADEMARK OFFICE

Commissioner for Patents
United States Patent and Trademark Office
P.O. Box 1450
Alexandria, VA 22313-1450
www.uspto.gov

QUALCOMM INCORPORATED
5775 MOREHOUSE DR.
SAN DIEGO CA 92121

COPY MAILED

AUG 13 2008

| | | |
|---|---|---|
| In re Application of | : | |
| Gurkanwal Sahota et al. | : | |
| Application No. 10/624,247 | : | DECISION ON PETITION |
| Filed: July 21, 2003 | : | |
| Attorney Docket No. 990307C1 | : | |

This is a decision on the petition under the unintentional provisions of 37 CFR 1.137(b), filed January 17, 2008, to revive the above-identified application.

The petition is **GRANTED**.

The application became abandoned for failure to reply in a timely manner to the non-final Office action mailed, February 12, 2007, which set a shortened statutory period for reply of three (3) months. No extensions of time under the provisions of 37 CFR 1.136(a) were obtained. Accordingly, the application became abandoned on May 13, 2007.

The petition satisfies the requirements of 37 CFR 1.137(b) in that petitioner has supplied (1) the reply in the form of an amendment, (2) the petition fee of $1540.00, and (3) a proper statement of unintentional delay.

It is not apparent whether the statement of unintentional delay was signed by a person who would have been in a position of knowing that the entire delay in filing the required reply from the due date for the reply until the filing of a grantable petition pursuant to 37 CFR 1.137(b) was unintentional. Nevertheless, in accordance with 37 CFR 10.18, the statement is accepted as constituting a certification of unintentional delay. However, in the event that petitioner has no knowledge that the delay was unintentional, petitioner must make such an inquiry to ascertain that, in fact, the delay was unintentional. If petitioner discovers that the delay was intentional, petitioner must so notify the Office.

There is no indication that the person signing the instant petition was ever given a power of attorney or authorization of agent to prosecute the above-identified application. In accordance with 37 CFR 1.34(a), the signature appearing on the petition shall constitute a representation to the United States Patent and Trademark Office that he/she is authorized to represent the particular party in whose behalf he/she acts. However, if petitioner desires to receive future correspondence regarding this application, the appropriate power of attorney or authorization of agent must be submitted.

Telephone inquiries concerning this decision should be directed to JoAnne Burke at (571) 272-4584.

This application is being referred to Technology Center AU 2618 for appropriate action by the Examiner in the normal course of business on the reply received.

Irvin Dingle
Petitions Examiner
Office of Petitions

UNITED STATES PATENT AND TRADEMARK OFFICE

Commissioner for Patents
United States Patent and Trademark Office
P.O. Box 1450
Alexandria, VA 22313-1450
www.uspto.gov

AARON WININGER
SQUIRE SANDERS & DEMPSEY, LLP
600 HANSEN WAY
PALO ALTO, CA 94304-1043

COPY MAILED

JUN 21 2004

OFFICE OF PETITIONS

| | | |
|---|---|---|
| In re Application of | : | |
| Nam Hoon Baik et al | : | |
| Application No. 10/624,248 | : | NOTICE |
| Filed: July 22, 2003 | : | |
| Attorney Docket No. 61282.00006 | | |

This is a notice regarding your request for acceptance of a fee deficiency submission under 37 CFR 1.28. On September 1, 1998, the Court of Appeals for the Federal Circuit held that 37 CFR 1.28(c) is the sole provision governing the time for correction of the erroneous payment of the issue fee as a small entity. **See DH Technology v. Synergystex International, Inc. 154 F.3d 1333, 47 USPQ2d 1865 (Fed. Cir. Sept. 1, 1998).**

The Office no longer investigates or rejects original or reissue applications under 37 CFR 1.56. **1098 Off. Gaz. Pat. Office 502 (January 3, 1989)**. Therefore, nothing in this Notice is intended to imply that an investigation was done.

Your fee deficiency submission under 37 CFR 1.28 is hereby **ACCEPTED**.

Inquiries related to this communication should be directed to the Office of Petitions Staff at (703) 305-9285.

This file is being forwarded to Technology Center AU 2171.

Irvin Dingle
Petitions Examiner
Office of Petitions
Office of the Deputy Commissioner
for Patent Examination Policy

UNITED STATES PATENT AND TRADEMARK OFFICE

Commissioner for Patents
United States Patent and Trademark Office
P.O. Box 1450
Alexandria, VA 22313-1450
www.uspto.gov

AARON WININGER
SQUIRE SANDERS & DEMPSEY, LLP
600 HANSEN WAY
PALO ALTO, CA 94304-1043

COPY MAILED
JUN 1 8 2004
OFFICE OF PETITIONS

| | | |
|---|---|---|
| In re Application of | : | |
| Kwanyoung Lee et al | : | |
| Application No. 10/624,251 | : | NOTICE |
| Filed: July 22, 2003 | : | |
| Attorney Docket No. 61282.00005 | | |

This is a notice regarding your request for acceptance of a fee deficiency submission under 37 CFR 1.28. On September 1, 1998, the Court of Appeals for the Federal Circuit held that 37 CFR 1.28(c) is the sole provision governing the time for correction of the erroneous payment of the issue fee as a small entity. **See DH Technology v. Synergystex International, Inc. 154 F.3d 1333, 47 USPQ2d 1865 (Fed. Cir. Sept. 1, 1998).**

The Office no longer investigates or rejects original or reissue applications under 37 CFR 1.56. **1098 Off. Gaz. Pat. Office 502 (January 3, 1989)**. Therefore, nothing in this Notice is intended to imply that an investigation was done.

Your fee deficiency submission under 37 CFR 1.28 is hereby **ACCEPTED**.

Inquiries related to this communication should be directed to the Office of Petitions Staff at (703) 305-9285.

This file is being forwarded to Technology Center AU 1711.

Irvin Dingle
Petitions Examiner
Office of Petitions
Office of the Deputy Commissioner
for Patent Examination Policy

UNITED STATES PATENT AND TRADEMARK OFFICE

Commissioner for Patents
United States Patent and Trademark Office
P.O. Box 1450
Alexandria, VA 22313-1450
www.uspto.gov

COPY MAILED
SEP 1 2 2006
OFFICE OF PETITIONS

BARNES & THORNBURG LLP
P.O. BOX 2786
CHICAGO, IL 60690-2786

In re Application of Hart et al. :
Application No. 10/624,284 : Decision on Petition
Filing Date: July 21, 2003 :
Attorney Docket No. 27726-93386 :

This is a decision on the petition under 37 CFR 1.137(b), filed March 7, 2006, to revive the above-identified application.

The petition is **granted**.

The above-identified application became abandoned for failure to reply in a timely manner to the non-final Office action mailed July 21, 2004, which set a shortened statutory period for reply of three (3) months. An extension of time under the provisions of 37 CFR 1.136(a) was not obtained. Accordingly, the above-identified application became abandoned on October 22, 2004. A Notice of Abandonment was mailed on March 7, 2005.

The instant petition requests revival of the application.

Petitioner has met the requirements to revive the above-identified application pursuant to 37 CFR 1.137(b). Therefore, the petition is granted and the application is revived.

An extension of time fee is unnecessary when filing a petition under 37 CFR 1.137. Therefore, the $1,020 extension of time fee has been credited back to petitioner's deposit account.

Technology Center Art Unit 1761 will be informed of the instant decision and the application will be further examined in due course.

Telephone inquiries regarding this communication should be directed to Petitions Attorney Steven Brantley at (571) 272-3203.

Charles Steven Brantley
Senior Petitions Attorney
Office of Petitions

## SPE RESPONSE FOR CERTIFICATE OF CORRECTION

**Paper No**.:20080825

**DATE** : August 25, 2008

**TO SPE OF** : ART UNIT 3761

**SUBJECT** : Request for Certificate of Correction on Patent No.: 7,118,546

A response is requested with respect to the accompanying request for a certificate of correction.

Please complete this form and return with file, within **7** days to:
**Certificates of Correction Branch - ST (South Tower) 9A22**
Palm location **7590** - Tel. No. (703) 305-8309

With respect to the change(s) requested, correcting Office and/or Applicant's errors, should the patent read as shown in the certificate of correction? No new matter should be introduced, nor should the scope or meaning of the claims be changed.

**Thank You For Your Assistance** **Certificates of Correction Branch**

**The request for issuing the above-identified correction(s) is hereby:**

Note your decision on the appropriated box.

☒ **Approved** All changes apply.

☐ **Approved in Part** Specify below which changes **do not** apply.

☐ **Denied** State the reasons for denial below.

**Comments:**

/Tatyana Zalukaeva/
Supervisory Patent Examiner, Art Unit 3761

## SPE RESPONSE FOR CERTIFICATE OF CORRECTION

Paper No.: —

DATE : 11/5/07

TO SPE OF : ART UNIT 2165

SUBJECT : Request for Certificate of Correction for Appl. No.: 10/624326 Patent No: 7171405 B2

A response is requested with respect to a request for a certificate of correction.

With respect to the change(s) requested to correct Office and/or Applicant's errors, should the patent read as shown in the certificate of correction attached herewith or the COCIN document(s), in IFW images for the above-identified patented application? No new matter should be introduced, nor should the scope or meaning of the claims be changed.

If the response is for an IFW, within 7 days, please complete and forward the response, to the employee (named below) via scanning into application images, using document code **COCX**.

If the response is for a paper file wrapper, please complete the response and forward the response with the paper file wrapper, to the employee (named below), within 7 days, to:

**Certificates of Correction Branch (CofC)**
**South Tower - 9A22**
**Palm Location 7580**

*VIRGINIA TOLBERT*
**Certificates of Correction Branch**
**703-308-9390 ext. 113**

**Thank You For Your Assistance**

**The request for issuing the above-identified correction(s) is hereby:**
Note your decision on the appropriate box.

- ☑ **Approved** — All changes apply.
- ☐ **Approved in Part** — Specify below which changes **do not** apply.
- ☐ **Denied** — State the reasons for denial below.

**Comments:** _____

APU MOFIZ
SUPERVISORY PATENT EXAMINER
**SPE**

2161
**Art Unit**

UNITED STATES PATENT AND TRADEMARK OFFICE

Commissioner for Patents
United States Patent and Trademark Office
P.O. Box 1450
Alexandria, VA 22313-1450
www.uspto.gov

**SIDLEY AUSTIN LLP**
**717 NORTH HARWOOD**
**SUITE 3400**
**DALLAS TX 75201**

**MAILED**

MAR 25 2009

OFFICE OF PETITIONS

| | |
|---|---|
| In re Application of<br>Shinichi Nishikawa<br>Application No. 10/624,331<br>Filed: July 22, 2003<br>Attorney Docket No. 15162/06050 | DECISION GRANTING PETITION<br>UNDER 37 CFR 1.313(c)(2) |

This is a decision on the petition under 37 CFR 1.313(c)(2), filed March 24, 2009, to withdraw the above-identified application from issue after payment of the issue fee.

The petition is **GRANTED**.

The above-identified application is withdrawn from issue for consideration of a submission under 37 CFR 1.114 (request for continued examination). *See* 37 CFR 1.313(c)(2).

***Petitioner is advised that the issue fee paid on March 9, 2009 cannot be refunded. If, however, this application is again allowed, petitioner may request that it be applied towards the issue fee required by the new Notice of Allowance.***[1]

Telephone inquiries should be directed to the undersigned at (571) 272-3208.

This application is being referred to Technology Center AU 1791 for processing of the request for continued examination under 37 CFR 1.114 and for consideration of the concurrently filed amendment.

/Karen Creasy/
Karen Creasy
Petitions Examiner
Office of Petitions

---

[1] *The request to apply the issue fee to the new Notice may be satisfied by completing and returning the new Part B – Fee(s) Transmittal Form (along with any balance due at the time of submission). Petitioner is advised that the Issue Fee Transmittal Form* ***must*** *be completed and timely submitted to avoid abandonment of the application.*

UNITED STATES PATENT AND TRADEMARK OFFICE

Commissioner for Patents
United States Patent and Trademark Office
P.O. Box 1450
Alexandria, VA 22313-1450
www.uspto.gov

TRASK BRITT
P O BOX 2550
SALT LAKE CITY, UT 84110

COPY MAILED

JUN 27 2005

OFFICE OF PETITIONS

| | |
|---|---|
| In re Application of | : |
| David R. Hembree | : |
| Application No. 10/624,332 | : DECISION GRANTING PETITION |
| Filed: July 22, 2003 | : UNDER 37 CFR 1.313(c)(2) |
| Atty Dkt No. 3592.8US (97-0321.08/US) | : |

This is a decision on the petition, filed June 17, 2005, under 37 CFR 1.313(c)(2) to withdraw the above-identified application from issue after payment of the issue fee.

The petition is **GRANTED**.

The above-identified application is withdrawn from issue for consideration of a submission under 37 CFR 1.114 (request for continued examination). See 37 CFR 1.313(c)(2).

***Petitioner is advised that the issue fee paid on February 18, 2005 in the above-identified application cannot be refunded. If, however, the above-identified application is again allowed, petitioner may request that it be applied towards the issue fee required by the new Notice of Allowance.***[1]

Telephone inquiries should be directed to the undersigned at (571) 272-3218.

This matter is being referred to Technology Center AU 2812 for processing of the request for continued examination under 37 CFR 1.114 and for consideration of an Information Disclosure Statement.

Frances Hicks
Petitions Examiner
Office of Petitions

---

[1] *The request to apply the issue fee to the new Notice may be satisfied by completing and returning the new Issue Fee Transmittal Form PTOL-85(b), which includes the following language thereon: "Commissioner for Patents is requested to apply the Issue Fee and Publication Fee (if any) or re-apply any previously paid issue fee to the application identified above." Petitioner is advised that, whether a fee is indicated as being due or not, the Issue Fee Transmittal Form* ***must*** *be completed and timely submitted to avoid abandonment. Note the language in bold text on the first page of the Notice of Allowance and Fee(s) Due (PTOL-85).*

DATE 8/28/07 APPLICATION NUMBER 10624333

DOC CODE PET.DEC.PUBS DOC DATE _____

DELIVER THE ATTACHED FIFLE/DOCUMENT TO THE TC SCANNING CENTER

CONTRACTOR: THE ATTACHED FILE/DOCUMENT MUST BE INDEXED AND SCANNED INTO IFW WITHIN **8** WORK HOURS; UPLOADING OF THE SCANNED IMAGES SHOULD OCCUR NO LATER THAN **16** WORK HOURS FOLLOWING RECEIPT OF THIS REQUEST

AFTER SCANNING, ORIGINAL DOCUMENTS SHOULD BE BOXED IN ACCORDANCE WITH INSTRUCTIONS

UNITED STATES PATENT AND TRADEMARK OFFICE

COMMISSIONER FOR PATENTS
UNITED STATES PATENT AND TRADEMARK OFFICE
P.O. BOX 1450
ALEXANDRIA, VA 22313-1450
www.uspto.gov

Paper No.

BRINKS HOFER GILSON & LIONE
P.O. BOX 10395
CHICAGO IL 60610

**COPY MAILED**

SEP 0 4 2007

**OFFICE OF PETITIONS**

| | | |
|---|---|---|
| In re Application of | : | DECISION ON REQUEST |
| Van Gompel et al. | : | FOR RECONSIDERATION |
| Application No. 10/624,333 | : | OF PATENT TERM ADJUSTMENT |
| Filed: 22 July, 2003 | : | |
| Attorney Docket No. | : | |
| 695-1095 | : | |

This is in response to the REQUEST FOR REVIEW OF PATENT TERM ADJUSTMENT filed on 2 July, 2007. Pursuant to their duty of good faith and candor, applicants disclose that they believe the patent term adjustment calculation was done incorrectly.

The request for review of the initial determination of patent term adjustment (PTA) is **GRANTED**.

The Office has updated the PAIR screen to reflect that the correct Patent Term Adjustment determination at the time of the mailing of the Notice of Allowance is ONE HUNDRED THIRTY SIX (136) days. A copy of the updated PAIR screen, showing the correct determination, is enclosed.

On 2 April, 2007, the Office mailed the Determination of Patent Term Adjustment under 35 U.S.C. 154(b) in the above-identified application. The Notice stated that the patent term adjustment to date is 267 days. Applicants state, as a basis for their assertion that the patent term adjustment calculation was done incorrectly, the fact that a revised Appeal Brief was filed on 22 May, 2006.

A review of the application history confirms a basis for an entry of a period of reduction. 37 CFR 1.704(c) provides, in pertinent part, that:

> Circumstances that constitute a failure of the applicant to engage in reasonable efforts to conclude processing or examination of an application also include the following circumstances, which will result in the following reduction of the period of adjustment set forth in § 1.703 to the extent that the periods are not overlapping:
>
> > (7) Submission of a reply having an omission (§1.135(c)), in which case the period of adjustment set forth in § 1.703 shall be reduced by the number of days, if any, beginning on the day after the date the reply having an omission was filed and ending on the date that the reply or other paper correcting the omission was filed;

In this instance, after the filing of an Appeal Brief on 27 February, 2006, a Notification of Non-Compliant Appeal Brief (37 CFR 41.37) was mailed, stating the brief filed on 27 February, 2006, was defective, and that an amended brief was required. In response, on 22 May, 2006, a revised Appeal Brief was filed to correct the deficiencies in the original brief. Accordingly, the PTA should have been reduced by 83 days, the number of days beginning on the day after the date the initial reply having an omission was filed, 27 February, 2006, and ending on the date that the reply or other such paper correcting the omission was filed, 22 May, 2006.

Further, it is noted that 48 days of Office delay were granted because the non-final Office action mailed on 14 August, 2006, was calculated as being mailed four (4) months and 48 days from the filing of the Appeal Brief mailed on 27 February, 2006. This calculation is incorrect in view of the fact that the Appeal Brief filed on 27 February, 2006, was defective, and a new brief required. Accordingly, the non-final Office action mailed on 14 August, 2006, was mailed within four (4) months of the filing of the revised Appeal Brief filed on 22 May, 2006, so the patent term adjustment of 48 days of Office delay is unwarranted.

In view thereof, the correct determination of PTA at the time of the mailing of the notice of allowance is ONE HUNDRED THIRTY-SIX (136) days.

As this letter was submitted as an advisement to the Office of an error in Applicant's favor, the Office will not assess the $200.00 application fee under 37 CFR 1.705(b). The Office thanks applicant for their good faith and candor in bringing this to the attention of the Office.

The application is being forwarded to the Office of Patent Publication for issuance of the application. The patent term adjustment indicated on the patent (as shown on the Issue Notification mailed about three weeks prior to patent issuance) will include any additional adjustment accrued both for Office delay in issuing the patent more than four months after payment of the issue fee and satisfaction of all outstanding requirements, and for the Office taking in excess of three years to issue the patent (to the extent that the three-year period does not overlap with periods already accorded).

Telephone inquiries specific to this matter should be directed to Senior Petitions Attorney Douglas I. Wood at (571) 272-3231.

Nancy Johnson
Senior Petitions Attorney
Office of Petitions

Enclosure: Copy of adjusted PAIR calculation

Day : Wednesday

# PALM INTRANET

Date: 8/29/2007
Time: 15:24:27

| PTA Calculations for Application: 10/624333 | | | |
|---|---|---|---|
| Application Filing Date: | 07/22/2003 | PTO Delay (PTO): | 273 |
| Issue Date of Patent: | | Three Years: | 0 |
| Pre-Issue Petitions: | 0 | Applicant Delay (APPL): | 6 |
| Post-Issue Petitions: | 0 | Total PTA (days): | 136 |
| PTO Delay Adjustment: | -131 | | |

**File Contents History**

| Number | Date | Contents Description | PTO | APPL | START |
|---|---|---|---|---|---|
| 55 | 08/29/2007 | ADJUSTMENT OF PTA CALCULATION BY PTO | | 83 | |
| 54 | 08/29/2007 | ADJUSTMENT OF PTA CALCULATION BY PTO | | 48 | |
| 42 | 04/02/2007 | MAIL NOTICE OF ALLOWANCE | | | |
| 41 | 04/02/2007 | MAIL FORMAL DRAWINGS REQUIRED | 16 | | 34 |
| 40 | 02/05/2007 | ISSUE REVISION COMPLETED | | | |
| 39 | 02/05/2007 | FORMAL DRAWINGS REQUIRED | | | |
| 38 | 02/05/2007 | NOTICE OF ALLOWANCE DATA VERIFICATION COMPLETED | | | |
| 37 | 02/05/2007 | NOTICE OF ALLOWABILITY | | | |
| 36 | 01/31/2007 | CASE DOCKETED TO EXAMINER IN GAU | | | |
| 35 | 11/30/2006 | DATE FORWARDED TO EXAMINER | | | |
| 34 | 11/17/2006 | RESPONSE AFTER NON-FINAL ACTION | | 3 | 31 |
| 33 | 11/17/2006 | OATH OR DECLARATION FILED (INCLUDING SUPPLEMENTAL) | | | |
| 32 | 11/20/2006 | CASE DOCKETED TO EXAMINER IN GAU | | | |
| 31 | 08/14/2006 | MAIL NON-FINAL REJECTION | 48 | | 25 |
| 30 | 08/07/2006 | NON-FINAL REJECTION | | | |
| 29 | 06/01/2006 | DATE FORWARDED TO EXAMINER | | | |
| 28 | 05/22/2006 | APPEAL BRIEF FILED | | | |
| 27 | 05/09/2006 | NOTICE -- DEFECTIVE APPEAL BRIEF | | | |
| 26 | 03/11/2006 | DATE FORWARDED TO EXAMINER | | | |
| 25.1 | 02/27/2006 | DEFECTIVE / INCOMPLETE APPEAL BRIEF FILED | | | |
| 25 | 02/27/2006 | APPEAL BRIEF FILED | | | |
| 24 | 12/30/2005 | NOTICE OF APPEAL FILED | | 1 | 23 |
| 23 | 09/29/2005 | MAIL FINAL REJECTION (PTOL - 326) | | | |
| 22 | 09/27/2005 | FINAL REJECTION | | | |

| | | | | | |
|---|---|---|---|---|---|
| 21 | 07/27/2005 | DATE FORWARDED TO EXAMINER | | | |
| 20 | 07/21/2005 | RESPONSE AFTER NON-FINAL ACTION | | 2 | 16 |
| 19 | 02/04/2005 | INFORMATION DISCLOSURE STATEMENT (IDS) FILED | | | |
| 18 | 01/21/2005 | REFERENCE CAPTURE ON IDS | | | |
| 17 | 01/21/2005 | INFORMATION DISCLOSURE STATEMENT (IDS) FILED | | | |
| 16 | 04/19/2005 | MAIL NON-FINAL REJECTION | 209 | | -1 |
| 15 | 04/18/2005 | NON-FINAL REJECTION | | | |
| 14 | 03/31/2005 | IFW TSS PROCESSING BY TECH CENTER COMPLETE | | | |
| 13 | 03/31/2005 | CASE DOCKETED TO EXAMINER IN GAU | | | |
| 12 | 03/10/2004 | INFORMATION DISCLOSURE STATEMENT (IDS) FILED | | | |
| 11 | 03/10/2004 | OATH OR DECLARATION FILED (INCLUDING SUPPLEMENTAL) | | | |
| 10 | 03/10/2004 | REFERENCE CAPTURE ON IDS | | | |
| 8 | 02/09/2004 | APPLICATION DISPATCHED FROM OIPE | | | |
| 7 | 02/09/2004 | APPLICATION IS NOW COMPLETE | | | |
| 6 | 01/31/2004 | CASE CLASSIFIED BY OIPE | | | |
| 4 | 10/20/2003 | CLEARED BY L&R (LARS) | | | |
| 3 | 10/09/2003 | INTENTIONALLY REFERRED BY OIPE OR L&R | | | |
| 2 | 08/24/2003 | IFW SCAN & PACR AUTO SECURITY REVIEW | | | |
| 1 | 07/22/2003 | INITIAL EXAM TEAM NN | | | |

**Search Another: Application#** Search

**EXPLANATION OF PTA CALCULATION**

**EXPLANATION OF PTE CALCULATION**

To go back use Back button on your browser toolbar.

Back to PALM | ASSIGNMENT | OASIS | Home page

UNITED STATES PATENT AND TRADEMARK OFFICE

Commissioner for Patents
United States Patent and Trademark Office
P.O. Box 1450
Alexandria, VA 22313-1450
www.uspto.gov

MAILED

JAN 20 2010

OFFICE OF PETITIONS

**HOFFMAN WARNICK LLC**
**75 STATE STREET**
**14TH FLOOR**
**ALBANY, NY 12207**

| | | |
|---|---|---|
| In re Patent No. 7,578,509 | : | |
| Issue Date: August 25, 2009 | : | |
| Application No. 10/624,338 | : | NOTICE |
| Filed: July 22, 2003 | : | |
| Attorney Docket No. GRON-0002 | : | |

This is a notice regarding your request for acceptance of a fee deficiency submission under 37 CFR 1.28.

The Office no longer investigates or rejects original or reissue patent under 37 CFR 1.56. **1098 Off. Gaz. Pat. Office 502 (January 3, 1989)**. Therefore, nothing in this Notice is intended to imply that an investigation was done.

The petition is not signed by an attorney of record. Nevertheless, in accordance with 37 CFR 1.34, the signature of Ms. Meghan Q. Toner appearing on the correspondence shall constitute a representation to the United States Patent and Trademark Office that he is authorized to represent the particular party on whose behalf she acts.

Your fee deficiency submission under 37 CFR 1.28 is hereby **ACCEPTED**.

This patent is no longer entitled to small entity status. Accordingly, all future fees paid in this patent must be paid at the large entity rate.

Inquiries related to this communication should be directed to the undersigned at (571) 272-6059.

The patent file will be forwarded to the Files Repository.

A. Kelley

Alicia Kelley
Petitions Examiner
Office of Petitions

UNITED STATES PATENT AND TRADEMARK OFFICE

Commissioner for Patents
United States Patent and Trademark Office
P.O. Box 1450
Alexandria, VA 22313-1450
www.uspto.gov

**SYNGENTA CROP PROTECTION, INC.**
**PATENT AND TRADEMARK DEPARTMENT**
**410 SWING ROAD**
**GREENSBORO, NC 27409**

**COPY MAILED**

JAN 30 2007

**OFFICE OF PETITIONS**

| | |
|---|---|
| In re Application of | : |
| Peter Maienfisch et al | : |
| Application No. 10/624,390 | : DECISION ON PETITION |
| Filed: July 22, 2003 | : UNDER 37 CFR 1.78(a)(3) |
| Attorney Docket No. P1/5-19164D7 | : |

This is a decision on the petition under 37 CFR 1.78(a)(3), filed May 9, 2006, to accept an unintentionally delayed claim under 35 U.S.C. § 120 for the benefit of priority to the prior-filed nonprovisional applications set forth in the Application Data Sheet filed with the petition.

The petition is **GRANTED**.

A petition for acceptance of a claim for late priority under 37 CFR 1.78(a)(3) is only applicable to those applications filed on or after November 29, 2000. Further, the petition is appropriate only after the expiration of the period specified in 37 CFR 1.78(a)(2)(ii). In addition, the petition under 37 CFR 1.78(a)(3) must be accompanied by:

**(1)** the reference required by 35 U.S.C. § 120 and 37 CFR 1.78(a)(2)(i) and (iii) of the prior-filed application, unless previously submitted;
**(2)** the surcharge set forth in § 1.17(t); and
**(3)** a statement that the entire delay between the date the claim was due under 37 CFR 1.78(a)(2)(ii) and the date the claim was filed was unintentional. The Director may require additional information where there is a question whether the delay was unintentional.

All of the above requirements having been satisfied, the late claim for benefit of priority under 35 U.S.C. § 120 is accepted as being unintentionally delayed.

***The granting of the petition to accept the delayed benefit claim to the prior-filed applications under 37 CFR 1.78(a)(3) should not be construed as meaning that this application is entitled to the benefit of the prior-filed applications. In order for this application to be entitled to the***

***benefit of the prior-filed applications, all other requirements under 35 U.S.C. § 120 and 37 CFR 1.78(a)(1) and (a)(2) must be met. Similarly, the fact that the corrected Filing Receipt accompanying this decision on petition includes the prior-filed applications should not be construed as meaning that applicant is entitled to the claim for benefit of priority to the prior-filed applications noted thereon. Accordingly, the examiner will, in due course, consider this benefit claim and determine whether the application is entitled to the benefit of the earlier filing date.***

A corrected Filing Receipt, which includes the priority claim to the prior-filed nonprovisional applications, accompanies this decision on petition.

Any inquiries concerning this decision may be directed to the undersigned at (571) 272-3218. All other inquiries concerning either the examination procedures or status of the application should be directed to the Technology Center.

This application is being referred to Technology Center Art Unit 1616 for consideration by the examiner of applicant's entitlement to claim benefit of priority under 35 U.S.C. § 120 to the prior-filed applications.

Frances Hicks
Petitions Examiner
Office of Petitions

**ATTACHMENT**: Corrected Filing Receipt

UNITED STATES PATENT AND TRADEMARK OFFICE

UNITED STATES DEPARTMENT OF COMMERCE
United States Patent and Trademark Office
Address: COMMISSIONER FOR PATENTS
P.O. Box 1450
Alexandria, Virginia 22313-1450
www.uspto.gov

| APPL NO. | FILING OR 371 (c) DATE | ART UNIT | FIL FEE REC'D | ATTY.DOCKET NO | DRAWINGS | TOT CLMS | IND CLMS |
|---|---|---|---|---|---|---|---|
| 10/624,390 | 07/22/2003 | 1616 | 804 | PI/5-19164/D7 | | 23 | 1 |

**CONFIRMATION NO. 6821**

**CORRECTED FILING RECEIPT**

*OC000000022224766*

26748
SYNGENTA CROP PROTECTION , INC.
PATENT AND TRADEMARK DEPARTMENT
410 SWING ROAD
GREENSBORO, NC 27409

Date Mailed: 01/30/2007

Receipt is acknowledged of this regular Patent Application. It will be considered in its order and you will be notified as to the results of the examination. Be sure to provide the U.S. APPLICATION NUMBER, FILING DATE, NAME OF APPLICANT, and TITLE OF INVENTION when inquiring about this application. Fees transmitted by check or draft are subject to collection. Please verify the accuracy of the data presented on this receipt. **If an error is noted on this Filing Receipt, please mail to the Commissioner for Patents P.O. Box 1450 Alexandria Va 22313-1450. Please provide a copy of this Filing Receipt with the changes noted thereon. If you received a "Notice to File Missing Parts" for this application, please submit any corrections to this Filing Receipt with your reply to the Notice. When the USPTO processes the reply to the Notice, the USPTO will generate another Filing Receipt incorporating the requested corrections (if appropriate).**

**Applicant(s)**

Peter Maienfisch, Rodersdorf, SWITZERLAND;
Laurenz Gsell, Basle, SWITZERLAND;

**Power of Attorney:**

Michael Glynn--27285
Luther Hall--27337
Norbert Gruenfeld--30061
Irving Fishman--30258
Joann Villamizar--30598
Kevin Mansfield--31635
William Hervey--32573
Marla Mathias--32663
W. Murray Spruill--32943
Shawn Foley--33071

**Domestic Priority data as claimed by applicant**

This application is a DIV of 09/669,209 09/25/2000 PAT 6,627,753
which is a DIV of 09/136,664 08/19/1998 PAT 6,376,487
which is a DIV of 08/464,931 06/05/1995 PAT 5,852,012
which is a DIV of 08/270,612 07/05/1994 ABN
which is a DIV of 08/091,801 07/14/1993 ABN

**Foreign Applications**

SWITZERLAND 2315/92-1 07/22/1992

**If Required, Foreign Filing License Granted:** 09/04/2003

**The country code and number of your priority application, to be used for filing abroad under the Paris**

**Convention, is US10/624,390**

**Projected Publication Date:** Not Applicable

**Non-Publication Request:** No

**Early Publication Request:** No

**Title**

Oxadiazine derivatives

**Preliminary Class**

514

## PROTECTING YOUR INVENTION OUTSIDE THE UNITED STATES

Since the rights granted by a U.S. patent extend only throughout the territory of the United States and have no effect in a foreign country, an inventor who wishes patent protection in another country must apply for a patent in a specific country or in regional patent offices. Applicants may wish to consider the filing of an international application under the Patent Cooperation Treaty (PCT). An international (PCT) application generally has the same effect as a regular national patent application in each PCT-member country. The PCT process **simplifies** the filing of patent applications on the same invention in member countries, but **does not result** in a grant of "an international patent" and does not eliminate the need of applicants to file additional documents and fees in countries where patent protection is desired.

Almost every country has its own patent law, and a person desiring a patent in a particular country must make an application for patent in that country in accordance with its particular laws. Since the laws of many countries differ in various respects from the patent law of the United States, applicants are advised to seek guidance from specific foreign countries to ensure that patent rights are not lost prematurely.

Applicants also are advised that in the case of inventions made in the United States, the Director of the USPTO must issue a license before applicants can apply for a patent in a foreign country. The filing of a U.S. patent application serves as a request for a foreign filing license. The application's filing receipt contains further information and guidance as to the status of applicant's license for foreign filing.

Applicants may wish to consult the USPTO booklet, "General Information Concerning Patents" (specifically, the section entitled "Treaties and Foreign Patents") for more information on timeframes and deadlines for filing foreign patent applications. The guide is available either by contacting the USPTO Contact Center at 800-786-9199, or it can be viewed on the USPTO website at http://www.uspto.gov/web/offices/pac/doc/general/index.html.

For information on preventing theft of your intellectual property (patents, trademarks and copyrights), you may wish to consult the U.S. Government website, http://www.stopfakes.gov. Part of a Department of Commerce initiative, this website includes self-help "toolkits" giving innovators guidance on how to protect intellectual property in specific countries such as China, Korea and Mexico. For questions regarding patent enforcement issues, applicants may call the U.S. Government hotline at 1-866-999-HALT (1-866-999-4158).

---

## LICENSE FOR FOREIGN FILING UNDER
## Title 35, United States Code, Section 184
## Title 37, Code of Federal Regulations, 5.11 & 5.15

**GRANTED**

The applicant has been granted a license under 35 U.S.C. 184, if the phrase "IF REQUIRED, FOREIGN FILING LICENSE GRANTED" followed by a date appears on this form. Such licenses are issued in all applications where the conditions for issuance of a license have been met, regardless of whether or not a license may be required as set forth in 37 CFR 5.15. The scope and limitations of this license are set forth in 37 CFR 5.15(a) unless an earlier license has been issued under 37 CFR 5.15(b). The license is subject to revocation upon written notification. The date indicated is the effective date of the license, unless an earlier license of similar scope has been granted under 37 CFR 5.13 or 5.14.

This license is to be retained by the licensee and may be used at any time on or after the effective date thereof unless it is revoked. This license is automatically transferred to any related applications(s) filed under 37 CFR 1.53(d). This license is not retroactive.

The grant of a license does not in any way lessen the responsibility of a licensee for the security of the subject matter as imposed by any Government contract or the provisions of existing laws relating to espionage and the national security or the export of technical data. Licensees should apprise themselves of current regulations especially with respect to certain countries, of other agencies, particularly the Office of Defense Trade Controls, Department of State (with respect to Arms, Munitions and Implements of War (22 CFR 121-128)); the Bureau of Industry and Security, Department of Commerce (15 CFR parts 730-774); the Office of Foreign Assets Control, Department of Treasury (31 CFR Parts 500+) and the Department of Energy.

**NOT GRANTED**

No license under 35 U.S.C. 184 has been granted at this time, if the phrase "IF REQUIRED, FOREIGN FILING LICENSE GRANTED" DOES NOT appear on this form. Applicant may still petition for a license under 37 CFR 5.12, if a license is desired before the expiration of 6 months from the filing date of the application. If 6 months has lapsed from the filing date of this application and the licensee has not received any indication of a secrecy order under 35 U.S.C. 181, the licensee may foreign file the application pursuant to 37 CFR 5.15(b).

UNITED STATES PATENT AND TRADEMARK OFFICE

MAR 30 2005

COMMISSIONER FOR PATENTS
UNITED STATES PATENT AND TRADEMARK OFFICE
P.O. BOX 1450
ALEXANDRIA, VA 22313-1450
www.uspto.gov

MAILED

MAR 30 2005

OFFICE OF THE DIRECTOR
TC 3600

TAROLLI, SUNDHEIM, COVELL & TUMMINO LLP
SUITE 1111
526 SUPERIOR AVENUE
CLEVELAND OH 44114-1400

In re Application of :
David et al. :
Serial No. 10/624,400 : WITHDRAWAL FROM ISSUE
Filed July 22, 2003 :

The purpose of this communication is to inform you that the above identified application is being withdrawn from issue pursuant to 37 CFR 1.313.

The application is being withdrawn to permit reopening of prosecution. The reasons therefor will be communicated to you by the examiner.

PTO records reveal that the issue fee has not been paid. If the issue fee has been submitted, the applicant may request a refund or may request that the fee be credited to a deposit account. However, applicant may wait until the application is either again found allowable or held abandoned. If the application is allowed, upon receipt of a new Notice of Allowance and Issue Fee Due, applicant may request that the previously submitted issue fee be applied toward payment of the issue fee in the amount identified on the new Notice of Allowance and Issue Fee Due. If the application is abandoned, applicant may request either a refund or a credit to a deposit account.

The application is being forwarded to the examiner for action.

Robert J. Oberleitner, Director
Technology Center 3600
Phone: (703) 308-1134
Fax: (703) 308-2177

UNITED STATES PATENT AND TRADEMARK OFFICE

Commissioner for Patents
United States Patent and Trademark Office
P.O. Box 1450
Alexandria, VA 22313-1450
www.uspto.gov

Paper No.

HEWLETT PACKARD COMPANY
P O BOX 272400, 3404 E. HARMONY ROAD
INTELLECTUAL PROPERTY ADMINISTRATION
FORT COLLINS CO 80527-2400

**COPY MAILED**

SEP 30 2008

**OFFICE OF PETITIONS**

| | | |
|---|---|---|
| In re Application of | : | |
| Huanzhao Zeng et al. | : | |
| Application No. 10/624,410 | : | |
| Filed: July 21, 2003 | : | DECISION ON PETITION |
| Attorney Docket No. 200300621-1 | : | PURSUANT TO |
| Title: CONFORMING OUTPUT | : | 37 C.F.R. § 1.137(B) |
| INTENSITIES OF PENS | : | |

This is a decision on the petition filed May 20, 2008, pursuant to 37 C.F.R. § 1.137(b), to revive the above-identified application.

This petition is **GRANTED**.

The above-identified application became abandoned for failure to submit the issue and publication fees in a timely manner in reply to the Notice of Allowance and Issue Fee Due, mailed November 29, 2007, which set a shortened statutory period for reply of three months. No extensions of time are permitted for transmitting issue or publication fees.[1] Accordingly, the above-identified application became abandoned on March 1, 2008. A Notice of Abandonment was mailed on March 26, 2008.

A grantable petition pursuant to 37 C.F.R. § 1.137(b) must be accompanied by:

(1) The reply required to the outstanding Office

1 See MPEP § 710.02(e).

action or notice, unless previously filed;

(2) The petition fee as set forth in 37 C.F.R. § 1.17(m);

(3) A statement that the entire delay in filing the required reply from the due date for the reply until the filing of a grantable petition pursuant to this paragraph was unintentional. The Commissioner may require additional information where there is a question whether the delay was unintentional, and;

(4) Any terminal disclaimer (and fee as set forth in 37 C.F.R. § 1.20(d)) required pursuant to paragraph (d) of this section.

With this petition, Petitioner has included the petition, issue, and publication fees, along with the proper statement of unintentional delay.

The first three requirements of Rule 1.137(b) have been met. The fourth requirement of Rule 1.137(b) is not applicable, as a terminal disclaimer is not required.

Pursuant to this decision, the Office of Patent Publication will be notified of this decision so that the present application can be processed into a patent.

Petitioner may find it beneficial to view Private PAIR within a fortnight of the present decision to ensure that the revival has been acknowledged by the Office of Patent Publication in response to this decision. It is noted that all inquiries with regard to any failure of that change in status should be directed to the Office of Patent Publication where that change of status must be effected - **the Office of Petitions cannot effectuate a change of status**.

It is noted that the address listed on the petition differs from the address of record. The application file does not indicate a change of correspondence address has been filed in this case, although the address given on the petition differs from the address of record. If Petitioner desires to receive future correspondence regarding this application, the change of correspondence address must be submitted. A courtesy copy of this decision will be mailed to Petitioner. However, all future correspondence will be directed to the address of record until such time as appropriate instructions are received to the contrary. Petitioner will not receive future correspondence related to this application unless Change of Correspondence

Address, Patent Form (PTO/SB/122) is submitted for the above-identified application. For Petitioner's convenience, a blank Change of Correspondence Address, Patent Form (PTO/SB/122), may be found at http://www.uspto.gov/web/forms/sb0122.pdf.

It is not apparent whether the person signing the statement of unintentional delay was in a position to have firsthand or direct knowledge of the facts and circumstances of the delay at issue. Nevertheless, such statement is being treated as having been made as the result of a reasonable inquiry into the facts and circumstances of such delay.[2] In the event that such an inquiry has not been made, Petitioner must make such an inquiry. If such inquiry results in the discovery that the delay was intentional, Petitioner must notify the Office.

Telephone inquiries regarding *this decision* should be directed to the undersigned at (571) 272-3225.[3] All other inquiries concerning the status of the application should be directed to the Office of Patent Publication at 571-272-4200.

/Paul Shanoski/
Paul Shanoski
Senior Attorney
Office of Petitions

cc: William J. Jacob
324 E. 11th Street, Suite 101
Kansas City, MO 64106

---

2 See 37 C.F.R. § 10.18(b); cf. Changes to Patent Practice and Procedure; Final Rule Notice, 62 Fed. Reg. 53131, 53178 (October 10, 1997), 1203 Off. Gaz. Pat. Office 63, 103 (October 21, 1997).

3 Petitioner will note that all practice before the Office should be in writing, and the action of the Office will be based exclusively on the written record in the Office. See 37 C.F.R. § 1.2. As such, Petitioner is reminded that no telephone discussion may be controlling or considered authority for any further action(s) of Petitioner.

UNITED STATES PATENT AND TRADEMARK OFFICE

Commissioner for Patents
United States Patent and Trademark Office
P.O. Box 1450
Alexandria, VA 22313-1450
www.uspto.gov

SUNG I. OH
SQUIRE, SANDERS & DEMPSEY, L.L.P.
14TH FLOOR
801 S. FIGUEROA STREET
LOS ANGELES, CA 90017

**COPY MAILED**

DEC 17 2004

**OFFICE OF PETITIONS**

| | | |
|---|---|---|
| In re Application of | : | |
| Kim, et al. | : | |
| Application No. 10/624,412 | : | ON PETITION |
| Filed: July 21, 2003 | : | |
| Attorney Docket No. 58255-00005 | : | |

This is a decision on the petition under 37 C.F.R. § 1.137(b), filed November 15, 2004, to revive the above-identified application.

The petition is **dismissed.**

Any request for reconsideration of this decision must be submitted within TWO (2) MONTHS from the mail date of this decision. Extensions of time under 37 CFR 1.136(a) are permitted. The reconsideration request should include a cover letter entitled "Renewed Petition under 37 CFR 1.137(b)."

The above-identified application became abandoned for failure to reply in a timely manner to the Notice to File Missing Parts of Application (Notice) mailed November 7, 2003. The Notice set a period for reply of two (2) months from the mail date of the Notice. No extensions of time under the provisions of 37 CFR 1.136(a) were obtained. Accordingly, the above-identified application became abandoned on January 8, 2004. A Notice of Abandonment was mailed on October 22, 2004.

Effective December 1, 1997, the provisions of 37 CFR 1.137(b) now provide that where the delay in reply was unintentional, a petition may be filed to revive an abandoned application pursuant to 37 CFR 1.137(b). A grantable petition pursuant to 37 CFR 1.137(b) must be accompanied by:

(1) the required reply, unless previously filed. In a nonprovisional application abandoned for failure to prosecute, the required reply may be met by the filing of a continuing application. In an application, abandoned or lapsed for failure to pay the issue fee or any portion thereof, the required reply must be the payment of the issue fee or any outstanding balance thereof.

(2) the petition fee as set forth in 37 CFR 1.17(m);

(3) a statement that the **entire** delay in filing the required reply from the due date for the reply until the filing of a grantable petition pursuant to 37 CFR 1.137(b) was unintentional. The Commissioner may require additional information where there is a question whether the delay was unintentional; and

(4) any terminal disclaimer (and fee set forth in 37 CFR 1.20(d)) required pursuant to 37 CFR 1.137(d).

The instant petition does not satisfy requirement (1) above.

An executed oath or declaration still has not been filed. Applicant indicates that inventor Nathan Leach refuses to sign the declaration. Accordingly, applicant must submit a petition under 37 CFR 1.47(a). See MPEP 409.03.

Further correspondence with respect to this matter should be addressed as follows:

By mail: Mail Stop Petition
Commissioner for Patents
Box 1450
Alexandria, VA 22313

By FAX: (703) 872-9306
Attn: Office of Petitions

By hand: Customer Service Window
2011 South Clark Place
Crystal Plaza Two, Lobby, Room 1B03
Arlington, VA 22202

Telephone inquiries should be directed to the undersigned at (571)272-3228.

Edward J. Tannouse
Petitions Attorney
Office of Petitions
United States Patent and Trademark Office

UNITED STATES PATENT AND TRADEMARK OFFICE

Commissioner for Patents
United States Patent and Trademark Office
P.O. Box 1450
Alexandria, VA 22313-1450
www.uspto.gov

SUNG I. OH
SQUIRE, SANDERS & DEMPSEY, L.L.P.
14TH FLOOR
801 S. FIGUEROA STREET
LOS ANGELES, CA 90017

**COPY MAILED**

FEB 07 2005

**OFFICE OF PETITIONS**

| | | |
|---|---|---|
| In re Application of | : | |
| Kim, et al. | : | |
| Application No. 10/624,412 | : | ON PETITION |
| Filed: July 21, 2003 | : | |
| Attorney Docket No. 58255-00005 | : | |

This is a decision on the renewed petition under 37 CFR 1.137(b), filed January 25, 2005, to revive the above-identified application.

The petition is **GRANTED**.

The above-identified application became abandoned for failure to reply in a timely manner to the Notice to File Missing Parts of Application (Notice) mailed November 7, 2003. The Notice set a period for reply of two (2) months from the mail date of the Notice. No extensions of time under the provisions of 37 CFR 1.136(a) were obtained. Accordingly, the above-identified application became abandoned on January 8, 2004. A Notice of Abandonment was mailed on October 22, 2004.

The file is being forwarded to Technology Center 2100 for examination *in due course*.

Telephone inquiries concerning this matter may be directed to the undersigned at (571)272-3228.

Edward J. Tannouse
Petitions Attorney
Office of Petitions
United States Patent and Trademark Office

UNITED STATES PATENT AND TRADEMARK OFFICE

Commissioner for Patents
United States Patent and Trademark Office
P.O. Box 1450
Alexandria, VA 22313-1450
www.uspto.gov

SUNG I. OH
SQUIRE, SANDERS & DEMPSEY, L.L.P.
14TH FLOOR
801 S. FIGUEROA STREET
LOS ANGELES, CA 90017

**COPY MAILED**

FEB 08 2005

**OFFICE OF PETITIONS**

| | | |
|---|---|---|
| In re Application of | : | |
| Donte Kim and Nathan Leach | : | |
| Application No. 10/624,412 | : | DECISION GRANTING PETITION |
| Filed: July 21, 2003 | : | UNDER 37 CFR 1.47(a) |
| Title: SYSTEM FOR INTERFACING SOFTWARE PROGRAMS | : | |

This is in response to the "Petition Under 37 CFR 1.47(a)," filed January 25, 2005.

The petition is **granted**.

Petitioner has shown that the non-signing inventor has refused to join in the filing of the above-identified application.

The above-identified application and papers have been reviewed and found in compliance with 37 CFR 1.47(a). This application is hereby accorded Rule 1.47(a) status. As provided in Rule 1.47(c), this Office will forward notice of this application's filing to the non-signing inventor at the address given in the petition. Notice of the filing of this application will also be published in the Official Gazette.

The file is being forwarded to Technology Center 2100 for examination *in due course*.

Telephone inquiries regarding this decision should be directed to the undersigned at (571)272-3228.

Edward J. Tannouse
Petitions Attorney
Office of Petitions
United States Patent and Trademark Office

UNITED STATES PATENT AND TRADEMARK OFFICE

Commissioner for Patents
United States Patent and Trademark Office
P.O. Box 1450
Alexandria, VA 22313-1450
www.uspto.gov

NATHAN LEACH
17407 OLD COURT DRIVE
TOMBALL, TX 77377

COPY MAILED

FEB 08 2005

OFFICE OF PETITIONS

In re Application of
Donte Kim and Nathan Leach
Application No. 10/624,412
Filed: July 21, 2003
Title: SYSTEM FOR INTERFACING SOFTWARE PROGRAMS

Dear NATHAN LEACH:

You are named as a joint inventor in the above identified United States patent application, filed under the provisions of 35 U.S.C. 116 (United States Code), and 37 CFR 1.47(a), Rules of Practice in Patent Cases. Should a patent be granted on the application you will be designated therein as a joint inventor.

As a named inventor you are entitled to inspect any paper in the file wrapper of the application, order copies of all or any part thereof (at a prepaid cost per 37 CFR 1.19) or make your position of record in the application. Alternatively, you may arrange to do any of the preceding through a registered patent attorney or agent presenting written authorization from you. If you care to join the application, counsel of record (see below) would presumably assist you. Joining in the application would entail the filing of an appropriate oath or declaration by you pursuant to 37 CFR 1.63.

Telephone inquiries regarding this communication should be directed to the undersigned at (571)272-3228. Requests for information regarding your application should be directed to the File Information Unit at (703)308-2733. Information regarding how to pay for and order a copy of the application, or a specific paper in the application, should be directed to Certification Division at (703)308-9726 or 1(800)972-6382 (outside the Washington D.C. area).

Edward J. Tannouse
Petitions Attorney
Office of Petitions
United States Patent and Trademark Office

SUNG I. OH
SQUIRE, SANDERS & DEMPSEY, L.L.P.
14TH FLOOR
801 S. FIGUEROA STREET
LOS ANGELES, CA 90017

## SPE RESPONSE FOR CERTIFICATE OF CORRECTION

**Paper No**.:20091217

**DATE** : December 17, 2009

**TO SPE OF** : ART UNIT 3634

**SUBJECT** : Request for Certificate of Correction on Patent No.: 6978821

A response is requested with respect to the accompanying request for a certificate of correction.

Please complete this form and return with file, within **7** days to:
**Certificates of Correction Branch - PK 3-910**
Palm location **7590** - Tel. No. 305-8201

With respect to the change(s) requested, correcting Office and/or Applicant's errors, should the patent read as shown in the certificate of correction? No new matter should be introduced, nor should the scope or meaning of the claims be changed.

**Thank You For Your Assistance** **Certificates of Correction Branch**

**The request for issuing the above-identified correction(s) is hereby:**
Note your decision on the appropriate box.

☒ **Approved** **All** changes apply.

☐ **Approved in Part** Specify below which changes **do not** apply.

☐ **Denied** State the reasons for denial below.

**Comments:**

**SPE:** /Katherine Mitchell/ **Art Unit** 3634

UNITED STATES PATENT AND TRADEMARK OFFICE

Commissioner for Patents
United States Patent and Trademark Office
P.O. Box 1450
Alexandria, VA 22313-1450
www.uspto.gov

Jon L. Robert
Roberts Abokhair & Mardula LLC
11800 Sunrise Valley Drive, Suite 1000
Reston, VA 20191-5302

**COPY MAILED**

SEP 19 2006

**OFFICE OF PETITIONS**

| | | |
|---|---|---|
| In re Application of | : | |
| Doug Bender | : | |
| Application No. 10/624,433 | : | DECISION ON PETITION |
| Filed: July 22, 2003 | : | TO WITHDRAW |
| Attorney Docket No. 2870-002 | : | FROM RECORD |
| | : | |

This is a decision on the Request to Withdraw as attorney or agent of record under 37 C.F.R. § 1.36(b), filed December 16, 2005.

The request is **APPROVED**.

A grantable request to withdraw as attorney/agent of record must be signed by every attorney/agent seeking to withdraw or contain a clear indication that one attorney is signing on behalf of another/others. A request to withdraw will not be approved unless at least 30 (thirty) days would remain between the date of approval and the later of the expiration date of a time to file a response or the expiration date of the maximum time period which can be extended under 37 C.F.R. § 1.136(a).

The request was signed by Jon L. Roberts, on behalf of all attorneys of record.

All attorneys/agents have been withdrawn.

Applicant is reminded that there is no attorney of record at this time.

The correspondence address of record has been changed and the new correspondence address is the address indicated below.

There is no outstanding Office at this time.

Telephone inquiries concerning this decision should be directed to Terri Williams at 571-272-2991.

David Bucci
Petitions Examiner
Office of Petitions

cc: Paul Arena
i2 Telecom International, Inc.
1200 Abernathy Road
Atlanta, GA 30328

UNITED STATES PATENT AND TRADEMARK OFFICE

UNITED STATES DEPARTMENT OF COMMERCE
United States Patent and Trademark Office
Address: COMMISSIONER FOR PATENTS
P.O. Box 1450
Alexandria, Virginia 22313-1450
www.uspto.gov

| APPLICATION NUMBER | FILING OR 371 (c) DATE | FIRST NAMED APPLICANT | ATTY. DOCKET NO./TITLE |
|---|---|---|---|
| 10/624,433 | 07/22/2003 | Doug Bender | 2870-002 |

**CONFIRMATION NO. 6426**

*OC000000019716069*

*OC000000019716069*

22208
ROBERTS ABOKHAIR & MARDULA
SUITE 1000
11800 SUNRISE VALLEY DRIVE
RESTON, VA 20191

Date Mailed: 07/21/2006

## NOTICE REGARDING CHANGE OF POWER OF ATTORNEY

This is in response to the Power of Attorney filed 12/16/2005.

- The withdrawal as attorney in this application has been accepted. Future correspondence will be mailed to the new address of record. 37 CFR 1.33.

---

Terri S. Williams

TERRI S WILLIAMS
OP (571) 272-2991

FORMER ATTORNEY/AGENT COPY

UNITED STATES PATENT AND TRADEMARK OFFICE

Commissioner for Patents
United States Patent and Trademark Office
P.O. Box 1450
Alexandria, VA 22313-1450
www.uspto.gov

JOHN A.MOLNAR,JR.
PARKER-HANNIFIN CORPORATION
6035 PARKLAND BOULEVARD
CLEVELAND OH 44124-4141

COPY MAILED

MAY 24 2005

OFFICE OF PETITIONS

| | | |
|---|---|---|
| In re Application of | : | |
| Brian D. Morrison et al | : | |
| Application No. 10/624,442 | : | DECISION GRANTING PETITION |
| Filed: July 22, 2003 | : | UNDER 37 CFR 1.137(b) |
| For: ELECTRO-STATICALLY-SHIELDED | : | |
| PROCESSING MODULE | : | |

This is a decision on the petition under 37 CFR 1.137(b), filed December 20, 2004, to revive the above-identified application.

The petition is **GRANTED**.

The above-identified application became abandoned for failure to reply in a timely manner to the Notice To File Missing Parts Of Nonprovisional Application mailed December 2, 2003, which set a period for reply of two (2) months. No extensions of time under the provisions of 37 CFR 1.136(a) were obtained. Accordingly, the above-identified application became abandoned on February 3, 2004.

It is noted that the instant application claimed at the time of filing small entity status. However, the petition to revive authorizes the charging of a large entity petition fee. Therefore, in order to facilitate the processing of the instant petition, the large entity petition fee of $1,500 has been charged to petitioner's deposit account, as well as the large entity filing and surcharge fees. If petitioner is in fact a small entity, then petitioner may request a refund of half the fees paid. *Note* 37 CFR 1.26. If small entity status is not proper, petitioner must notify the Office in writing of the lost of entitlement to small entity status. *Note* 37 CFR 1.27(g)(2).

Telephone inquiries concerning this decision should be directed to the undersigned at (571) 272-3208.

This matter is being referred to the Office of Initial Patent Examination.

Karen Creasy

Karen Creasy
Petitions Examiner
Office of Petitions
Office of the Deputy Commissioner
for Patent Examination Policy

UNITED STATES PATENT AND TRADEMARK OFFICE

COMMISSIONER FOR PATENTS
UNITED STATES PATENT AND TRADEMARK OFFICE
WASHINGTON, D.C. 20231
www.uspto.gov

Paper No.

| | |
|---|---|
| In re Application of Steven M. Casey et al. | : |
| | : DECISION GRANTING PETITION |
| Application No. 10/624454 | : TO REMAIL AN OFFICE |
| Filed: July 21, 2003 | : COMMUNICATION AND RESTART |
| Attorney Docket No. 020366-089500US | : PERIOD FOR REPLY |

This is a decision on the petition filed on March 12, 2004, requesting that the Office communication mailed on October 23, 2003 be remailed and the shortened statutory period for reply set forth in the Office communication be restarted on the new mail date.

The petition is granted.

Petitioner provided a statement that the Office communication in question was not received and provided a docket report as proof. The petition was filed within two weeks of a telephone conversation with the Patent and Trademark Office inquiring why no filing receipt was received. A substantial portion of the reply period had elapsed.

Further review of the application shows that no Office Copy of the Notice to File Missing Parts, dated October 23, 2003 is in the file.

Accordingly, the Office communication in question will be remailed and the period for reply that was originally set forth in the Office communication will be restarted to run from the new mail date of the Office communication.

Kevin Little

Kevin Little
Office of Initial Patent Examination
(703) 308-1863

UNITED STATES PATENT AND TRADEMARK OFFICE

COMMISSIONER FOR PATENTS
UNITED STATES PATENT AND TRADEMARK OFFICE
P.O. BOX 1450
ALEXANDRIA, VA 22313-1450
www.uspto.gov

FINNEGAN, HENDERSON, FARABOW, GARRETT & DUNNER
LLP
901 NEW YORK AVENUE, NW
WASHINGTON DC 20001-4413

**COPY MAILED**

AUG 1 5 2005

**OFFICE OF PETITIONS**

Applicant: Vierich et al.
Appl. No.: 10/624,490
Filing Date: July 23, 2003
Title: PARAMETERIZED DATABASE DRILL-THROUGH
Attorney Docket No.: 08005.0010
Pub. No.: US 2004/0139102 A1
Pub. Date: July 15, 2004

This is a decision on the request for corrected of patent application publication under 37 CFR 1.221(b), filed on September 15, 2004 for the above-identified application

The request is DISMISSED.

Applicant requests that the application be republished because the patent application publication contains a material error, as "define any translation" is misprinted as "determine any translation," in paragraph [0023], and "within" is misprinted as "wit", " translating" is misprinted as "slating" and "to" is misprinted as "m" in claim 17.

37 CFR 1.221 (b) is applicable "only when the Office makes a material mistake which is apparent from Office records." A material mistake must affect the public's ability to appreciate the technical disclosure of the patent application publication, to determine the scope of the patent application publication, or to determine the scope of the provisional rights that an applicant may seek to enforce upon issuance of a patent. [1]

The errors noted by requestor wherein "define any translation" is misprinted as "determine any translation," in paragraph [0023], and "within" is misprinted as "wit", " translating" is misprinted as "slating" and "to" is misprinted as "m" in claim 17 are Office errors, but the mistakes are minor typographical error, which are clearly understandable to one of ordinary skill in reading the specification and the claims. The mistakes are minor typographical errors, which are clearly understandable from reading the claims in which the terms are used, as terms are not read in a vacuum. The mistake does not affect the public's ability to appreciate the technical disclosure of the patent application publication, or determine the scope of the patent application publication or determine the scope of the provisional rights that an applicant may seek to enforce upon issuance of a patent.

[1] Changes to Implement Eighteen-Month Publication of Patent Applications, 65 FR 57023, 57038 (Sept. 20, 2000), 1239, Off. Gaz. Pat. Office Notices 63, 75 ( Oct 10, 2000) (final rule).

Furthermore, these are not material errors since the Image File Wrapper (IFW) for this application is available to the public, as of its publication date.

The errors in this published application may be due in part to the poor quality of the text in the application. While the text is legible, the text is not clear, as the text blurry.

Applicant should file applications having larger text, which is cleaner and with sufficient clarity and contrast to permit reproduction to avoid errors in the patent application publication process. See 37 CFR 1.52.

The applicant is advised that a "request for republication of an application previously published" may be filed under 37 CFR 1.221 (a). Such a request for republication "must include a copy of the application compliance with the Office's electronic filing system requirements and be accompanied by the publication fee set forth in § 1.18 (d) and the processing fee set forth in § 1.17 (i)." If the request for republication does not comply with the electronic filing system requirements, the republication will not take place and the publication fee set forth in § 1.18 (d) will be refunded. The processing fee will be retained.

Any request for republication under 37 CFR 1.221(a), must be submitted via the EFS system and questions or request for reconsideration of the decision, should be addressed as follows:

By mail to: Mail Stop PGPUB
Commissioner for Patents
P.O. Box 1450
Alexandria, Va. 22313-1450

By facsimile: 571-273-8300

Inquiries relating to this matter may be directed to Mark Polutta at (571) 272-7709 (voice)

Mark Polutta
Legal Advisor
Office of Patent Legal Administration
Office of the Deputy Commissioner
For Patent Examination Policy

UNITED STATES PATENT AND TRADEMARK OFFICE

Commissioner for Patents
United States Patent and Trademark Office
P.O. Box 1450
Alexandria, VA 22313-1450
www.uspto.gov

AUG 30 2006

HUNTON & WILLIAMS LLP
INTELLECTUAL PROPERTY DEPARTMENT
1900 K STREET, N.W.
SUITE 1200
WASHINGTON DC 20006-1109

| | |
|---|---|
| In re Application of | : |
| Jacques Colinge et al | : |
| Serial No.: 10/624,531 | : PETITION TO MAKE SPECIAL |
| Filed: July 23, 2003 | : |
| Attorney Docket No.: 64176.000005 | : |

This is in response to applicants' petition filed April 5, 2006, to make the above-identified application special under the provisions of 37 CFR 1.102(d).

Applicant has satisfied the provisions set forth in M.P.E.P. 708.02, VIII. Therefor the petition is **GRANTED**.

**The following condition applies to the grant of this petition: If, upon examination, it is determined that a restriction requirement is necessary because of multiple inventions being claimed, applicant will be required to make an election without traverse of a single invention to be prosecuted. Failure to make an election without traverse will void the special status accorded in this decision.**

**The application will be forwarded the examiner for action on the merits commensurate with this decision.**

Should there be any questions with regard to this letter please contact William R. Dixon, Jr. by letter addressed to the Director, Technology Center 1600, P.O. Box 1450, Alexandria, VA 22313-1450, or by telephone at 571-272-0519 or by facsimile transmission at the general Office facsimile number, 571-273-8300.

William R. Dixon, Jr.
Special Program Examiner
Technology Center 1600

UNITED STATES PATENT AND TRADEMARK OFFICE

Commissioner for Patents
United States Patent and Trademark Office
P.O. Box 1450
Alexandria, VA 22313-1450
www.uspto.gov

**STAAS & HALSEY LLP**
**SUITE 700**
**1201 NEW YORK AVENUE, N.W.**
**WASHINGTON DC 20005**

**COPY MAILED**

SEP 01 2006

**OFFICE OF PETITIONS**

ON PETITION

| | | |
|---|---|---|
| In re Application of | : | |
| Katsushi Sakai | : | |
| Application No. 10/624,594 | : | |
| Filed: July 23, 2003 | : | |
| Attorney Docket No. 826.1883 | : | |

This is a decision on the petition, filed August 24, 2006, under 37 CFR 1.313(c)(2) to withdraw the above-identified application from issue after payment of the issue fee.

The petition is **GRANTED.**

The above-identified application is withdrawn from issue for consideration of a submission under 37 CFR 1.114 (request for continued examination). See 37 CFR 1.313(c)(2).

**Petitioner is advised that the issue fee paid on July 21, 2006, in the above-identified application cannot be refunded. If, however, the above-identified application is again allowed, petitioner may request that it be applied towards the issue fee required by the new Notice of Allowance.**[1]

Telephone inquiries should be directed to the undersigned at (571) 272-3208.

The examiner of Technology Center AU 3661 will consider the request for continued examination under 37 CFR 1.114.

Karen Creasy

Karen Creasy
Petitions Examiner
Office of Petitions

---

[1] The request to apply the issue fee to the new Notice may be satisfied by completing and returning the new Issue Fee Transmittal Form PTOL-85(b), which includes the following language thereon: "Commissioner for Patents is requested to apply the Issue Fee and Publication Fee (if any) or re-apply any previously paid issue fee to the application identified above." Petitioner is advised that, whether a fee is indicated as being due or not, the Issue Fee Transmittal Form **must** be completed and timely submitted to avoid abandonment. Note the language in bold text on the first page of the Notice of Allowance and Fee(s) Due (PTOL-85).

UNITED STATES PATENT AND TRADEMARK OFFICE

COMMISSIONER FOR PATENTS
UNITED STATES PATENT AND TRADEMARK OFFICE
P.O. BOX 1450
ALEXANDRIA, VA 22313-1450
www.uspto.gov

Paper No. _____

Date : September 1, 2006

TO : Director, Office of Patent Publication

FROM : Office of the Deputy Commissioner
for Patent Examination Policy

SUBJECT : Withdrawal from Issue of

Applicant(s) :Katsushi Sakai
Application No. :10/624,594
Filed :July 23, 2003

The above-identified application has been assigned Patent No. 7,103,446 and an issue date of September 5, 2006.

It is hereby directed that this application be withdrawn from issue at the request of the applicant.

Do not refund the issue fee.

The following erratum should be published in the Official Gazette if the above-identified application is published in the OG of September 5, 2006:

"All reference to Patent No. 7,103,446 to Katsushi Sakai of Japan for POWER SUPPLY CONTROL DEVICE AND METHOD FOR MOBILE ROBOT appearing in the Official Gazette of September 5, 2006 should be deleted since no patent was granted."

Karen Creasy

Karen Creasy
Petitions Examiner
Office of Petitions
Office of the Deputy Commissioner
for Patent Examination Policy

cc: Paul Harrison, MDW-4B03,(FAX-273-5468)
Deneise Boyd, MDE-3D39 (FAX-273-5124)
Mary Louise McAskill, ST-8C15 (FAX 305-4372)
Niomi Farmer, ST-8C14 (FAX-305-4372)
Mary E. Johnson (Cookie), MDE-7C71 (FAX 273-0038
Duane Davis P/OPC MDE-7D89

UNITED STATES PATENT AND TRADEMARK OFFICE

Commissioner for Patents
United States Patent and Trademark Office
P.O. Box 1450
Alexandria, VA 22313-1450
www.uspto.gov

DAVID J. FRENCH
STN. "D"
P.O. BOX 2486
OTTAWA K1P 5W6
CANADA

NOV 16 2005

| | | |
|---|---|---|
| In re Application of: | : | |
| CONSTANTINOS J. JOANNOUS | : | DECISION ON PETITION |
| Serial No.: 10/624,611 | : | TO MAKE SPECIAL |
| Filed: July 23, 2003 | : | |
| Attorney Number: **JOANN-12.US(5078-12-10)** | : | |

This is a decision on the petition under 37 C.F.R. § 1.102(c), filed July 23, 2003, to make the above-identified application special.

Petitioner requests that the above-identified application be made special under the accelerated examination procedure set forth in the Manual of Patent Examining Procedure (M.P.E.P.) § 708.02, Section IV: Applicant's Age.

A grantable petition to make special under 37 C.F.R. § 1.102, and in accordance with M.P.E.P. § 708.02, Section IV, must include evidence showing that the applicant is sixty five (65) years of age or more. No fee is required for this petition.

The petition includes a statement from the applicant stating that Constantinos J. Joannous is sixty-five (65) years of age or more.

Accordingly, the petition is GRANTED.

If the examiner can make this application special without prejudice to any possible interfering applications, and s/he should make a rigid search for such, s/he is authorized to do so for the next action. Should the application be rejected, the application will not be considered special for the subsequent action unless the applicant promptly makes a bona fide effort to place the application in condition for allowance, even if it is necessary to have an interview with the examiner to accomplish this purpose.

If the examiner finds any interfering application for the same subject matter, s/he should consider such application simultaneously with this application and should state in the official letter of such application that s/he is taking it out of its turn because of possible interference.

Should an appeal be taken in this application or should this application become involved in an interference, consideration of the appeal and the interference will be expedited by all Patent and Trademark Office officials concerned, contingent likewise upon diligent prosecution by the applicant.

After allowance, this application will be given priority for printing. See M.P.E.P. § 1309.

Inquiries regarding this decision should be directed to Jose Dees at (571) 272-1569.

Jose Dees, Special Programs Examiner
Technology Center 2800
Semiconductors, Electrical and Optical
Systems and Components

## SPE RESPONSE FOR CERTIFICATE OF CORRECTION

**Paper No.:** _____

**DATE** : 3-6-06

**TO SPE OF** : ART UNIT 1638

**SUBJECT** : Request for Certificate of Correction for Appl. No.: 10/624619 B2 Patent No.: 6987212

Please respond to this request for a certificate of correction within 7 days.

Please review the requested changes/corrections as shown in the **COCIN** document(s) in the IFW application image. No new matter should be introduced, nor should the scope or meaning of the claims be changed.

Please complete the response (see below) and forward the completed response to scanning using document code **COCX**.

E James

**Certificates of Correction Branch**

**703-308-9390 ext.** _____

See req. 2-13-06 for last req. thanks item [60]

**Thank You For Your Assistance**

**The request for issuing the above-identified correction(s) is hereby:**

Note your decision on the appropriate box.

- [x] **Approved** — All changes apply.
- [ ] **Approved in Part** — Specify below which changes **do not** apply.
- [ ] **Denied** — State the reasons for denial below.

**Comments:**

No new matter or scope change.

[signature]

**SPE**

1638

**Art Unit**

## SPE RESPONSE FOR CERTIFICATE OF CORRECTION

Paper No.: _____

DATE : 03/15/07

TO SPE OF : ART UNIT 2879

SUBJECT : Request for Certificate of Correction for Appl. No.: **10/624637** Patent No.: **7091662**

Please respond to this request for a certificate of correction within 7 days.

Please review the requested changes/corrections as shown in the **COCIN** document(s) in the IFW application image. No new matter should be introduced, nor should the scope or meaning of the claims be changed.

Please complete the response (see below) and forward the completed response to scanning using document code **COCX**.


**Angela Green**
**Certificates of Correction Branch**
**703.308.9380 ext.** 123


**Thank You For Your Assistance**

**The request for issuing the above-identified correction(s) is hereby:**
Note your decision on the appropriate box.

- ☐ **Approved** — **All** changes apply.
- ☒ **Approved in Part** — Specify below which changes **do not** apply.
- ☐ **Denied** — State the reasons for denial below.

**Comments:** Change of a For. Pat. Doc 52-091364 to 9-061364 does not apply, as JP 52-091364 was a properly disclosed/submitted prior art document. JP 9-061364 is not on record as a properly disclosed/submitted prior art document.

SPE

2879
Art Unit

Staple Here Only!

PRINTER'S TRIM LINE

UNITED STATES PATENT AND TRADEMARK OFFICE

# CERTIFICATE OF CORRECTION

PATENT NO. : 7,091,662 B2

DATED : August 15, 2006

INVENTOR(S) : MITSUTOSHI HASEGAWA ET AL.



**It is certified that error appears in the above-identified patent and that said Letters Patent is hereby corrected as shown below:**

ON COVER PAGE AT (56) FOREIGN PATENT DOCUMENTS

not relevant "52-091364" should read --9-061364--.

OK COLUMN 1

Line 42, "before" should read --before being--.

OK COLUMN 3

Line 20, "before" should read --before being--.

OK COLUMN 5

Line 10, "diagram" should read --diagrams--.

OK COLUMN 8

Line 28, "suite" should read --suit--; and
Line 51, "suite" should read --suit--.

MAILING ADDRESS OF SENDER:
FITZPATRICK, CELLA, HARPER & SCINTO
30 Rockefeller Plaza
New York, New York 10112-3801
(212) 218-2100 - Telephone
(212) 218-2200 - Facsimile

PATENT NO. US 7,091,662 B2

No. of add'l. copies @ 30¢ per page

MAR - 2 2007

Form PTO 1050 (Rev. 3-82)

619287v1

Staple Here Only!

PRINTER'S TRIM LINE

UNITED STATES PATENT AND TRADEMARK OFFICE

# CERTIFICATE OF CORRECTION

PATENT NO. : 7,091,662 B2

DATED : August 15, 2006

INVENTOR(S) : MITSUTOSHI HASEGAWA ET AL.



It is certified that error appears in the above-identified patent and that said Letters Patent is hereby corrected as shown below:

OK COLUMN 9

Line 48, "suite" should read --suit--.

MAILING ADDRESS OF SENDER:

FITZPATRICK, CELLA, HARPER & SCINTO
30 Rockefeller Plaza
New York, New York 10112-3801
(212) 218-2100 - Telephone
(212) 218-2200 - Facsimile

PATENT NO. US 7,091,662 B2

No. of add'l. copies @ 30¢ per page

Form PTO 1050 (Rev. 3-82)

MAR - 2 2007

619287v1

UNITED STATES PATENT AND TRADEMARK OFFICE

Commissioner for Patents
United States Patent and Trademark Office
P.O. Box 1450
Alexandria, VA 22313-1450
www.uspto.gov

PILLSBURY WINTHROP SHAW PITTMAN LLP
P O BOX 10500
McLEAN, VA 22102

COPY MAILED

MAR 1 0 2006

OFFICE OF PETITIONS

| | | |
|---|---|---|
| In re Application of | : | |
| Erik K. Scheirer et al | : | |
| Application No. 10/624,657 | : | DECISION GRANTING PETITION |
| Filed: July 21, 2003 | : | UNDER 37 CFR 1.137(b) |
| Attorney Docket No. 07111-0304313 | : | |

This is a decision on the petition under 37 CFR 1.137(b), filed January 17, 2006, to revive the above-identified application.

The petition is **GRANTED**.

This application became abandoned for failure to timely pay the issue and publication fees on or before September 26, 2005, as required by the Notice of Allowance and Fee(s) Due, mailed June 24, 2005. Accordingly, the date of abandonment of this application is September 27, 2005. A Notice of Abandonment was mailed on January 9, 2006.

The petition satisfies the conditions for revival pursuant to the provisions of 37 CFR 1.137(b) in that (1) the reply in the form of payment of the $700 issue fee and $300 publication fee; (2) the petition fee of $750; and (3) the required statement of unintentional delay have been received. Accordingly, the issue and publication fees are accepted as having been unintentionally delayed.

Telephone inquiries concerning this decision should be directed to the undersigned at (571) 272-3218.

The application is being referred to Publishing Division for processing into a patent.

Frances Hicks
Petitions Examiner
Office of Petitions

C:\Documents and Settings\FHicks\My Documents\470\Mar9\624657.wpd

UNITED STATES PATENT AND TRADEMARK OFFICE

COMMISSIONER FOR PATENTS
UNITED STATES PATENT AND TRADEMARK OFFICE
P.O. BOX 1450
ALEXANDRIA, VA 22313-1450
www.uspto.gov

Paper No.

Jeffrey Brill
FENWICK & WEST LLP
Silicon Valley Center
801 California Street
Mountain View, CA 94041

MAILED

DEC 17 2004

Technology Center 2100

In re Application of:
Wolfgang S. Hammersmith
Application No. 10/624,658
Filed: July 21, 2003
For: CRYTOGRAPHIC KEY DISTRIBUTION USING KEY UNFOLDING

DECISION ON REQUEST TO WITHDRAW AS ATTORNEY OR AGENT

This is a decision on the Request To Withdraw from Representation filed June 07, 2004.

A grantable request to withdraw as attorney of record should indicate thereon the present mailing addresses of the attorney(s) who is/are withdrawing from the record and of the applicant. The request for withdrawal must be signed by every attorney seeking to withdraw or contain a clear indication that one attorney is signing on behalf of another/others. A request to withdraw will not be approved unless at least 30 (thirty) days would remain between the date of approval and the later of the expiration date of a time to file a response or the expiration date of the maximum time period which can be extended under 37 C.F.R. § 1. 136(a). The effective date of withdrawal being the date of decision and not the date of request. See M.P.E.P. § 402.06. 37 C.F.R. § 1.36 further requires that the applicant or patent owner be notified of the withdrawal of the attorney or agent.

The request filed June 07, 2004 meets all the requirements. Accordingly the request is **GRANTED**.

All future communications from the Office will be directed to the below-listed address until otherwise notified by applicant. This correspondence address is provided by the withdrawn attorney(s). Applicant is reminded of the obligation to promptly notify the Patent and Trademark Office (Office) of any change in correspondence address to ensure receipt of all communications from the Office.

James R. Matthews

For Vincent N. Trans
Special Program Examiner
Technology Center 2100
Computer Architecture, Software, and
Information Security
(571) 272-3613

cc: Edward J. Radlo
SONNENSCHEIN NATH & ROSENTHAL LLP
685 Market Street, 6th Floor
San Francisco, CA 94105

UNITED STATES PATENT AND TRADEMARK OFFICE

Commissioner for Patents
United States Patent and Trademark Office
P.O. Box 1450
Alexandria, VA 22313-1450
www.uspto.gov

**Sonnenschein Nath & Rosenthal, LLP**
**P.O. Box 061080**
**Wacker Drive Station, Sears Tower**
**Chicago, IL 60606-1080**

COPY MAILED

DEC 12 2007

OFFICE OF PETITIONS

| | | |
|---|---|---|
| In re Application of | : | |
| Wolfgang S. Hammersmith et al. | : | |
| Application No. 10/624,658 | : | DECISION ON PETITION |
| Filed: July 21, 2003 | : | TO WITHDRAW |
| Attorney Docket No. 44461660-8127 | : | FROM RECORD |
| | : | |

This is a decision on the Request to Withdraw as attorney or agent of record under 37 C.F.R. § 1.36(b), filed November 16, 2007.

The request is **APPROVED**.

A grantable request to withdraw as attorney/agent of record must be signed by every attorney/agent seeking to withdraw or contain a clear indication that one attorney is signing on behalf of another/others. A request to withdraw will not be approved unless at least 30 (thirty) days would remain between the date of approval and the later of the expiration date of a time to file a response or the expiration date of the maximum time period which can be extended under 37 C.F.R. § 1.136(a).

The request was signed by Edward J. Radlo on behalf of all attorneys of record who are associated with customer No. 26263. All attorneys/agents associated with the Customer Number 26263 have been withdrawn.

Applicant is reminded that there is no attorney of record at this time.

The request to change the correspondence of record is not acceptable as the requested correspondence address is not that of (1) the first named signing inventor; or (2) an assignee of the entire interest who has properly intervened under 37 C.F.R. 3.71.[1] Accordingly, all correspondence will be mailed to the first signing inventor Wolfgang S. Hammersmith. A courtesy copy of this decision will be mailed to the address indicated in the request to withdraw. If this company desires to receive future correspondence regarding this application, the proper power of attorney documents must be submitted.

[1] The power of attorney filed on January 21, 2005 was not accompanied by a proper statement under 3.73(b).

Telephone inquiries concerning this decision should be directed to Kimberly Inabinet at 571-272-4618.

Kimberly Inabinet
Petitions Examiner
Office of Petitions

cc: Wolfgang S. Hammersmith
4507 Pacific Highway East, Suite D
Tacoma, WA 98424

cc: Elizabeth Hammersmith
Chief Operating Officer
Vadium Technology, Inc.
4507 Pacific Highway East, Suite D
Tacoma, WA 98424

UNITED STATES PATENT AND TRADEMARK OFFICE

Commissioner for Patents
United States Patent and Trademark Office
P.O. Box 1450
Alexandria, VA 22313-1450
www.uspto.gov

BRINKS HOFER GILSON & LIONE
P.O. BOX 10395
CHICAGO IL 60610

In re Application of:
Van Gompel, et al
Serial No. 10/624,660
Filed: July 22, 2003

Title: **DISPOSABLE UNDERGARMENT HAVING A CUTOUT AND METHOD FOR THE MANUFACTURE THEREOF**

DECISION ON PETITION
UNDER 37 CFR § 1.181

This is responsive to the petition filed on July 26, 2007 by which petitioners request supervisory review of the restriction requirement of claims 2-7, 10-16 and 28-33 rendered in paper No. 20070319 mailed March 27, 2007 in a Final Rejection, traversed by petitioners on June 04, 2007. The petition is considered pursuant to 37 CFR 1.144 and 37 CFR 1.181, and no fee is required.

The petition is **GRANTED.**

The record shows that:

1) On June 08, 2006, the Examiner rendered a Non-Final Office action (paper No. 20060527) rejecting originally filed claims 1-16 and 28-31 in response to a previously filed restriction/election requirement. On December 06, 2006, the Examiner rendered a second written restriction requirement between nine different species with a brief explanation of the particulars of each of the species. On January 08, 2007, Applicant elected to prosecute Specie G with the indication that claims 1-8, 10-16 and 28-33 were either generic with respect to, or read on specie G. On March 27, 2007, the Examiner rendered a Final Office Action considering only claims 1 and 8 (paper No. 20070319). On April 11, 2007, Applicant initiated a telephone interview with the Examiner to discuss the decision not to examine claims 2-7, 10-16 and 28-33. On June 6, 2007, Applicants traversed the restriction requirement and the withdrawal of claims 2-7, 10-16 and 28-33 from consideration in an amendment after final following the Examiner's agreement and suggestion during the interview. On June 28, 2007, the Examiner rendered a final decision in an Advisory Action refusing to consider claims 2-7, 10-16 and 28-33. On July 07, 2007, applicant responded by filing a Request for Continued Examination (RCE).

The Examiner's rationale for holding claims 2-7, 10-16 and 28-33 withdrawn cannot be maintained for the following reason.

Although a restriction requirement could be made any time before final, the Examiner rendered a first Office action on all the claims which are presumed to be thoroughly searched in all the appropriate areas. And even though the time for making a restriction requirement may be made at any time before final action, 37 CFR 1.42 (a) set forth that "Before making a restriction requirement after the first office action on the merits, the examiner will consider whether there will be a serious burden if restriction is not required", MPEP 811 [R-3]. Referring to the office action dated December 06, 2006, the Examiner *failed to set forth any indication of a serious burden if* restriction of these claims is not made. Since no indication on the record was made of how a serious burden exists by having to examine all the claims, the Examiner has not met the requirements for making a restriction in this case.

For the reason outlined above, the restriction requirement promulgated and made final is not in accordance with proper Office procedure. Accordingly, the Office action of Mar. 27, 2007 rendered in paper No. 20070319 is hereby withdrawn.

As a further procedural note, as this decision grants Petitioner relief from the restriction requirement, the amendment after final presented June 04, 2007 is deemed responsive to which a new Office action will be rendered. The Examiner should consider doing either re-write a new restriction requirement or adopt the species election as proposed by the applicant in the petition. The application is being forwarded to the Supervisory Patent Examiner of Art Unit 3761 who will have the Examiner promulgate an action on the merits of the presently pending claims not inconsistent with this Decision.

THE PETITION IS **GRANTED**

Frederick R. Schmidt, Director
Technology Center 3700

UNITED STATES PATENT AND TRADEMARK OFFICE

UNITED STATES DEPARTMENT OF COMMERCE
United States Patent and Trademark Office
Address: COMMISSIONER FOR PATENTS
P.O. Box 1450
Alexandria, Virginia 22313-1450
www.uspto.gov

KIMBERLY-CLARK WORLDWIDE, INC.
Tara Pohlkotte
2300 Winchester Rd.
NEENAH, WI 54956

Mail Date: 04/21/2010

| | | |
|---|---|---|
| **Applicant** | : Paul T. Van Gompel | : DECISION ON REQUEST FOR |
| **Patent Number** | : 7635360 | : RECALCULATION of PATENT |
| **Issue Date** | : 12/22/2009 | : TERM ADJUSTMENT IN VIEW |
| **Appliction No** | : 10/624,660 | : OF WYETH AND NOTICE OF INTENT TO |
| **Filed** | : 07/22/2003 | : ISSUE CERTIFICATE OF CORRECTION |
| | | : |

The Request for Recalculation is **GRANTED** to the extent indicated.

The patent term adjustment has been determined to be **995** days. The USPTO will *sua sponte* issue a certificate of correction reflecting the amount of PTA days determined by the recalculation.

Prior to the issuance of the certificate of correction, the USPTO will afford patentee an opportunity to be heard and request reconsideration. Accordingly, patentee has **one month or thirty (30) days**, whichever is longer, to file a request for reconsideration of this patent term adjustment calculation. See 35 U.S.C. 154(b)(3)(B)(ii) and 37 CFR 1.322(a)(4). No extensions of time will be granted under 37 CFR 1.136.

Patentee should use document code PET.OP if electronically filing a request for reconsideration of this patent term adjustment calculation. The patentee must also include the information required by 37 CFR 1.705(b)(2) and the fee required by 37 CFR 1.18(e). If patentee does not file a timely request for reconsideration of this patent term adjustment calculation including the information required by 37 CFR 1.705(b)(2) and the fee required by 37 CFR 1.18(e), the USPTO will issue a certificate of correction reflecting the PTA determination noted above.

Patentee should be aware that in order to preserve the right to review in the United States District Court for the District of Columbia of the USPTO patent term adjustment determination, patentee must ensure that he or she also take the steps required under 35 U.S.C. 154(b)(4)(A) in a timely manner. Nothing in the request for recalculation should be construed as providing an alternative time frame for commencing a civil action under 35 U.S.C. 154(b)(4)(A).

Any questions concerning this decision should be directed to the Office of Patent Legal Administration at 571-272-7702.

UNITED STATES PATENT AND TRADEMARK OFFICE

Commissioner for Patents
United States Patent and Trademark Office
P.O. Box 1450
Alexandria, VA 22313-1450
www.uspto.gov

**PATRICK G. BURNS, ESQ.**
**GREER, BURNS & CRAIN, LTD.**
**300 SOUTH WACKER DRIVE, SUITE 2500**
**CHICAGO, IL 60606**

COPY MAILED

AUG 17 2006

OFFICE OF PETITIONS

| | | |
|---|---|---|
| In re Application of | : | |
| Keiichi Nagasaka et al | : | |
| Application No. 10/624,665 | : | DECISION ON PETITION |
| Filed: July 22, 2003 | : | UNDER 37 CFR 1.55(c) |
| Attorney Docket No. 2500.66962 | : | |

This is a decision on the petition under 37 CFR 1.55(c), filed May 25, 2006, to accept an unintentionally delayed claim under 35 U.S.C. § 119(a)-(d) for the benefit of priority to foreign Japanese Application No. 2002-214900, filed July 24, 2002.

The petition is **GRANTED**.

This pending nonprovisional application was filed after November 29, 2000, and did not include a reference to the foreign application, for which benefit is now sought, within the later of four months from the actual filing date of the application or sixteen months from the filing date of the prior foreign application. Since the claim for priority is submitted after the period specified in 37 CFR 1.55(a)(1)(i), this is an appropriate petition under the provisions of 37 CFR 1.55(c).

A petition under 37 CFR 1.55(c) to accept an unintentionally delayed claim for priority requires:

(1) The nonprovisional application claiming the benefit of an earlier filing date must be filed on or after November 29, 2000;

(2) the claim submitted with the petition must identify the prior foreign application for which priority is claimed, as well as any foreign application for the same subject matter and having a filing date before that of the application for which priority is claimed, by the application number, country, and the filing date and be included either in an oath or declaration (37 CFR 1.63(c)(2)) or in an Application Data Sheet (37 CFR 1.76(b)(6);

(3) the surcharge as set forth in 37 CFR 1.17(t);

(4) a statement that the entire delay between the date the claim was due under 37 CFR 1.55(a)(1) and the date the claim was filed was unintentional (the Director

may require additional information where there is a question whether the delay was unintentional); and

(5) the above-identified nonprovisional application must be filed within 12 months of the filing date of the foreign application.

This application was filed on July 22, 2003, which is after November 29, 2000 and within 12 months of July 24, 2002 (the filing date of the foreign application to which benefit is now being claimed). On January 20, 2004, an executed oath/declaration was received which identifies the foreign application for which priority is claimed by application number, country and filing date. The required petition fee of $1,370 was received with the petition. Lastly, petitioner has provided an adequate statement of unintentional delay.

All of the above requirements having been satisfied, the late claim for priority under 35 U.S.C. § 119(a)-(d) is accepted as being unintentionally delayed.

A corrected Filing Receipt, which includes the priority claim to the prior-filed foreign application, has been mailed in this application.

The foreign priority claim has been considered and acknowledged by the Examiner. Accordingly, this application is being directed to Publishing Division for processing into a patent.

Any inquiries directly pertaining to this matter may be directed to the undersigned at (571) 272-3218.

Frances Hicks

Frances Hicks
Petitions Examiner
Office of Petitions

UNITED STATES PATENT AND TRADEMARK OFFICE

Commissioner for Patents
United States Patent and Trademark Office
P.O. Box 1450
Alexandria, VA 22313-1450
www.uspto.gov

**STAAS & HALSEY**
**SUITE 700**
**1201 NEW YORK AVENUE, N.W.**
**WASHINGTON, DC 20005**

COPY MAILED

MAY 1 3 2005

OFFICE OF PETITIONS

In re Application of :
Kimitaka Watanabe et al :
Application No. 10/624,682 : ON PETITION
Filed: July 23, 2003 :
Attorney Docket No. 1419.1080 :

This is a decision on the petition under 37 CFR 1.313(c), filed May 12, 2005, which is being treated under 37 CFR 1.313(c)(2), to withdraw the above-identified application from issue after payment of the issue fee.

The petition is **GRANTED**.

The above-identified application is withdrawn from issue for consideration of a submission under 37 CFR 1.114 (request for continued examination). See 37 CFR 1.313(c)(2).

**Petitioner is advised that the issue fee paid on March 24, 2005 in the above-identified application cannot be refunded. If, however, the above-identified application is again allowed, petitioner may request that it be applied towards the issue fee required by the new Notice of Allowance.**[1]

Telephone inquiries should be directed to Wan Laymon at (571) 272-3220.

This matter is being referred to Technology Center AU 2879 for processing of the request for continued examination under 37 CFR 1.114.

Wan Laymon
Wan Laymon
Petitions Examiner
Office of Petitions
Office of the Deputy Commissioner
for Patent Examination Policy

[1] The request to apply the issue fee to the new Notice may be satisfied by completing and returning the new Issue Fee Transmittal Form PTOL-85(b), which includes the following language thereon: "Commissioner for Patents is requested to apply the Issue Fee and Publication Fee (if any) or re-apply any previously paid issue fee to the application identified above." Petitioner is advised that, whether a fee is indicated as being due or not, the Issue Fee Transmittal Form **must** be completed and timely submitted to avoid abandonment. Note the language in bold text on the first page of the Notice of Allowance and Fee(s) Due (PTOL-85).

UNITED STATES PATENT AND TRADEMARK OFFICE

Commissioner for Patents
United States Patent and Trademark Office
P.O. Box 1450
Alexandria, VA 22313-1450
www.uspto.gov

**BLAKELY SOKOLOFF TAYLOR & ZAFMAN**
**12400 WILSHIRE BOULEVARD**
**SEVENTH FLOOR**
**LOS ANGELES, CA 90025-1030**

COPY MAILED

MAY 13 2005

OFFICE OF PETITIONS

In re Application of :
Kimitaka Watanabe et al :
Application No. 10/624,682 :
Filed: July 23, 2003 :
Attorney Docket No. 1419.1080 :

ON PETITION

This is a decision on the petition under 37 CFR 1.313(c)(2), filed May 9, 2005, to withdraw the above-identified application from issue after payment of the issue fee.

The petition is **GRANTED**.

The above-identified application is withdrawn from issue for consideration of a submission under 37 CFR 1.114 (request for continued examination). See 37 CFR 1.313(c)(2).

**Petitioner is advised that the issue fee paid on January 31, 2005 in the above-identified application cannot be refunded. If, however, the above-identified application is again allowed, petitioner may request that it be applied towards the issue fee required by the new Notice of Allowance.**[1]

Telephone inquiries should be directed to Wan Laymon at (571) 272-3220.

This matter is being referred to Technology Center AU 2182 for processing of the request for continued examination under 37 CFR 1.114.

Wan Laymon
Wan Laymon
Petitions Examiner
Office of Petitions
Office of the Deputy Commissioner
for Patent Examination Policy

[1] The request to apply the issue fee to the new Notice may be satisfied by completing and returning the new Issue Fee Transmittal Form PTOL-85(b), which includes the following language thereon: "Commissioner for Patents is requested to apply the Issue Fee and Publication Fee (if any) or re-apply any previously paid issue fee to the application identified above." Petitioner is advised that, whether a fee is indicated as being due or not, the Issue Fee Transmittal Form **must** be completed and timely submitted to avoid abandonment. Note the language in bold text on the first page of the Notice of Allowance and Fee(s) Due (PTOL-85).

UNITED STATES PATENT AND TRADEMARK OFFICE

COMMISSIONER FOR PATENTS
UNITED STATES PATENT AND TRADEMARK OFFICE
P.O. BOX 1450
ALEXANDRIA, VA 22313-1450
www.uspto.gov

MAIL

Paper No. 7

AUG 0 9 2004

DIRECTOR OFFICE
TECHNOLOGY CENTER 2600

Merchant & Gould PC.
3200 IDS CENTER
MINNEAPOLIS, MN 55402-2215

In re Application of
Mark Perry Davis

Application No. 10/624700
Filed: July 21, 2003
For: VIDEO-BASED COMPUTER HARDWARE AND SOFTWARE TESTING SYSTEM

DECISION ON REQUEST TO WITHDRAW FROM RECORD

This is a decision on the Request for Withdrawal as agent(s)/attorney(s) of record received on May 14, 2004.

A grantable request to withdraw as attorney/agent of record must:
(1) indicate the present mailing address of the attorney(s)/agent(s) who seek(s) to withdraw, and
(2) be signed by each attorney/agent seeking to withdraw or clearly be signed on their behalf, and
(3) be *approved* at least thirty (30) days prior to the maximum extendable period for response to any outstanding Office Action, and
(4) indicate the address to which future correspondence should be mailed.

Petitioner has met all of the above. Accordingly, the request is **GRANTED**.

All attorneys/agents of record are withdrawn.

All future communications from the Office will be directed to the address listed below until otherwise notified by applicant. Applicant is reminded of the obligation to promptly notify the Patent and Trademark Office of any change in correspondence address to ensure receipt of all communications from the Office.

The file is being returned to TC 2600 Central Files to await examination in appropriate turn.

Kenneth Wieder
Special Program Examiner
Technology Center 2600
Communications
(703) 305-4710

Cc: Mark P. Davis
2852 SW Genesee Street
Seattle, WA 98126

BEST AVAILABLE COPY

UNITED STATES PATENT AND TRADEMARK OFFICE

COMMISSIONER FOR PATENTS
UNITED STATES PATENT AND TRADEMARK OFFICE
P.O. BOX 1450
ALEXANDRIA, VA 22313-1450
www.uspto.gov

RATHE PATENT & IP LAW
10611 W. HAWTHORNE FARMS LANE
MEQUON, WI 53097

**COPY MAILED**

FEB 1 2 2007

**OFFICE OF PETITIONS**

| | | |
|---|---|---|
| In re Application of | : | |
| TYRA et al | : | |
| Application No.: 10/624,720 | : | DECISION ON PETITION |
| Filing Date: July 21, 2003 | : | UNDER 37 CFR 1.137(b) |
| Attorney Docket No.: 480/US/2 | : | |

This is a decision on the petition under 37 CFR 1.137(b), filed September 18, 2006, to revive the above-identified application.

The petition is **GRANTED.**

The above-identified application became abandoned for failure to reply in a timely manner to the non-final Office action mailed February 16, 2006, which set a shortened statutory period for reply of one (1) month or thirty (30) days whichever was longer. No extensions of time under the provisions of 37 CFR 1.136(a) were obtained. Accordingly, by operation of law, the above-identified application became abandoned on March 17, 2006.

The petition satisfies the conditions for revival pursuant to the provisions of 37 CFR 1.137(b) in that (1) the reply in the form of an election of the invention to be examined; (2) the petition fee; and (3) the required statement of unintentional delay have been received. Accordingly, the reply to the non-final Office action mailed February 16, 2006 is accepted as having been unintentionally delayed.

The Notice of Abandonment mailed September 18, 2006 is hereby VACATED.

This application is being referred to Technology Center AU 2166 for appropriate action on the reply in due course.

Telephone inquiries concerning this decision should be directed to the undersigned at (571) 272-3301.

Daniel Stemmer
Legal Examiner
Office of the Deputy Commissioner
for Patent Examination Policy

UNITED STATES PATENT AND TRADEMARK OFFICE

Commissioner for Patents
United States Patent and Trademark Office
P.O. Box 1450
Alexandria, VA 22313-1450
www.uspto.gov

WOOD, HERRON & EVANS, LLP
2700 CAREW TOWER
441 VINE STREET
CINCINNATI, OH 45202

COPY MAILED

MAR 07 2008

OFFICE OF PETITIONS

| | | |
|---|---|---|
| In re Application of | : | |
| Randal Howard Kerstetter, III, et al. | : | |
| Application No.: 10/624,742 | : | ON PETITION |
| Filed: July 21, 2003 | : | |
| Attorney Docket No.: DN2002-101 | : | |

This is a decision on the petition, filed March 6, 2008, under 37 CFR 1.313(c)(2) to withdraw the above-identified application from issue after payment of the issue fee.

The petition is **GRANTED**.

The above-identified application is withdrawn from issue for consideration of a submission under 37 CFR 1.114 (request for continued examination). See 37 CFR 1.313(c)(2).

***Petitioner is advised that the issue fee paid on January 23, 2008, cannot be refunded. If, however, the above-identified application is again allowed, petitioner may request that it be applied towards the issue fee required by the new Notice of Allowance.*** [1]

Telephone inquiries relating to this decision should be directed to the undersigned at (571) 272-3204.

The application is being referred to Technology Center AU 1794 for further processing of the request for continued examination under 37 CFR 1.114.

Sherry D. Brinkley
Petitions Examiner
Office of Petitions

[1] *The request to apply the issue fee to the new Notice may be satisfied by completing and returning the new Part B – Fee(s) Transmittal Form (along with any balance due at the time of submission). Petitioner is advised that the Issue Fee Transmittal Form must be completed and timely submitted to avoid abandonment of the application.*

UNITED STATES PATENT AND TRADEMARK OFFICE

COMMISSIONER FOR PATENTS
UNITED STATES PATENT AND TRADEMARK OFFICE
P.O. BOX 1450
ALEXANDRIA, VA 22313-1450
www.uspto.gov

MAILED

FEB 0 6 2004

Office of the Director
Group 3600

WILLIAM S. LOVELL
6435 N. E. NEPTUNE DR.
LINCOLN CITY, OR 97367

In re application of
Brian Maguire
Application No.10/624,790
Filed: July 21, 2003
For: MUNITIONS MINES

**DECISION ON PETITION TO MAKE SPECIAL (COUNTER TERRORISM)**

This is in response to the petition filed on July 31, 2003 to make the above-identified application special on the basis of inventions for countering terrorism as set forth in MPEP § 708.02 XI.

The requirements for granting special status under this section are: (A) a petition to make special accompanied by the fee set forth in 37 CFR 1.17(i); and (B) a statement explaining how the invention contributes to countering terrorism.

Applicant states that the present invention contributes to countering terrorism by introducing antipersonnel munitions, in the form of what the enemy perceives to be "ordinary" munitions, into the enemies' supplies and supply chains to inflict casualties among enemy forces and to destroy these same supplies. This could be accomplished by removing the delay charges in these munitions and providing them with much more explosive materials such that when activated by the enemy, the munitions and the enemy are destroyed. This is not an acceptable explanation of how the invention would act to counter terrorism because it appears to work, in effect, as a form of "booby trap" in that it seems to hinge on the necessity of having an enemy come into contact with the munitions. While this may work in a battlefield situation or one where an enemy can be infiltrated it seems unlikely with an invisible terrorist threat. Further applicant's statements for special status are not what is claimed as the invention. What applicant has claimed appears to be an ordinary munitions type of device, such as a mine. MPEP § 708.02 XI lists examples of types of inventions that would qualify as countering terrorism. While a grantable petition is not limited to these examples, note that the examples all clearly act to counter terrorism and function primarily as defensive measures against terrorist threats.

Since all of the requirements for special status under MPEP § 708.02 XI have been met, the petition is **DISMISSED**.

The examiner is directed (1) to make an interference search for possible interfering applications, (2) to promptly examine this application out of turn, and (3) if any interfering application is discovered, to examine such application simultaneously and state in the first official letter of such application that it is being taken out of turn because of a possible interference.

Petitioner is advised that this application will continue to be special, throughout its entire prosecution and pendency, including interference or appeal, if any, only if petitioner makes a prompt ***bona fide*** effort, in response to each Office action, to place the application in condition for allowance, even if it is necessary to conduct an interview with the examiner to accomplish this purpose.

**SUMMARY**: Petition to Make Special **DISMISSED**.

Steven N. Meyers
Special Programs Examiner
Technology Center 3600
(703) 308-3868

SNM/cps 1/25/04

UNITED STATES PATENT AND TRADEMARK OFFICE

COMMISSIONER FOR PATENTS
UNITED STATES PATENT AND TRADEMARK OFFICE
P.O. BOX 1450
ALEXANDRIA, VA 22313-1450
www.uspto.gov

JUL 19 2004

MAILED

JUL 19 2004

OFFICE OF THE DIRECTOR
TC 3600

WILLIAM S. LOVELL
6435 N. E. NEPTUNE DR.
LINCOLN CITY, OR 97367

In re application of
Brian Maguire
Application No.10/624,790
Filed: July 21, 2003
For: MUNITIONS MINES

**DECISION ON PETITION TO MAKE SPECIAL (COUNTER TERRORISM)**

In response to applicant's inquiry regarding the Petition Decision mailed February 6, 2004, it was determined that the Petition Decision included inconsistencies and that clarification was in order. Therefore, the following response is set forth in order to clarify the position of the Office regarding the petition filed on July 31, 2003, and supersedes the previous Petition Decision.

This renewed decision is in response to the petition filed on July 31, 2003 to make the above-identified application special on the basis of inventions for countering terrorism as set forth in MPEP § 708.02 XI.

The requirements for granting special status under this section are: (A) a petition to make special accompanied by the fee set forth in 37 CFR 1.17(i); and (B) a statement explaining how the invention contributes to countering terrorism.

Applicant states that the present invention contributes to countering terrorism by introducing antipersonnel munitions, in the form of what the enemy perceives to be "ordinary" munitions, into the enemies' supplies and supply chains to inflict casualties among enemy forces and to destroy these same supplies. This could be accomplished by removing the delay charges in these munitions and providing them with much more explosive materials such that when activated by the enemy, the munitions and the enemy are destroyed. This is not an acceptable explanation of how the invention would act to counter terrorism because it appears to work, in effect, as a form of "booby trap" in that it seems to hinge on the necessity of having an enemy come into contact with the munitions. While this may work in a battlefield situation or one where an enemy can be infiltrated it seems unlikely with an invisible terrorist threat. Further applicant's statements for special status are not what is claimed as the invention. What applicant has claimed appears to be an ordinary munitions type of device, such as a mine. MPEP § 708.02 XI lists examples of types of inventions that would qualify as countering terrorism. While a grantable petition is not limited to these examples, note that the examples all clearly act to counter terrorism and function primarily as defensive measures against terrorist threats.

Since all of the requirements for special status under MPEP § 708.02 XI have not been met, the petition is **DISMISSED**.

Any request for reconsideration must be filed within TWO MONTHS of the date of this decision. Extensions of time under 37 CFR 1.136(a) are permitted. Should petitioner desire reconsideration, he should supplement this petition by a declaration or statement giving the information as outlined above. Applicant should promptly submit a renewed petition to the Commissioner of Patents and Trademarks, Washington, D.C. 20231. The envelope should indicate that the correspondence be brought to the attention of Technology Center 3600.

Until the renewed petition is submitted, the application will be returned to the examiner's docket to await treatment on the merits in the normal order of examination.

**SUMMARY**: Petition to Make Special **DISMISSED**.

Steven N. Meyers
Special Programs Examiner
Technology Center 3600
(703) 308-3868

SNM/vdb 7/15/04

This Page Is Inserted by IFW Operations
and is not a part of the Official Record

# BEST AVAILABLE IMAGES

Defective images within this document are accurate representations of the original documents submitted by the applicant.

Defects in the images may include (but are not limited to):

- BLACK BORDERS
- TEXT CUT OFF AT TOP, BOTTOM OR SIDES
- FADED TEXT
- ILLEGIBLE TEXT
- SKEWED/SLANTED IMAGES
- COLORED PHOTOS
- BLACK OR VERY BLACK AND WHITE DARK PHOTOS
- GRAY SCALE DOCUMENTS

## IMAGES ARE BEST AVAILABLE COPY.

**As rescanning documents *will not* correct images, please do not report the images to the Image Problem Mailbox.**

IFW

DRC

OIPE JC42
APR 30 2004
PATENT & TRADEMARK OFFICE

UNITED STATES PATENT AND TRADEMARK OFFICE

| | |
|---|---|
| In re Application of Aldo Marra, et al. | Date: April 27, 2004 |
| Application No.: 10/624,792 | Group Art Unit: Unknown |
| Filed: July 22, 2003 | Examiner: Unknown |
| For: Portable Door Lock | Attorney Ref. No.: 126.01 |

***Response to Decision on Request Under 37 CFR 5.25***

Mail Stop Petition
Commissioner for Patents
P.O. Box 1450
Alexandria, Virginia 22313-1450

Dear Sir or Madam:

The applicants, Aldo and Yael Marra, hereby respond to the Decision on Request Under 37 CFR 5.25 ("Decision") that was mailed on March 25, 2004. The Decision denied the applicants' petition for a retroactive filing receipt, for two reasons: (i) the alleged failure to provide a listing of the countries in which the foreign application was filed, along with the dates of filing, and (ii) lack of sufficient evidence that the foreign application was filed through error and without deceptive intent. The applicant responds to these points below, and with the new information provided by the applicants, the petition should now be granted.

*Date and Country of Filing*

The applicants respectfully disagree with the claim that they failed to identify the countries and dates of foreign filing. On page 1 of the declaration of Aldo Marra, the applicants stated that: "British counsel filed a PCT patent application with the World Intellectual Property Organization (WIPO) on or about December 29, 2003." This

statement identifies both the jurisdiction of the filing -- "the World Intellectual Property Organization" -- and the date -- "on or about December 29, 2003."

Perhaps the examiner wants the information in list format:

| Type of Filing | Country of Filing | Date | Application Number |
|---|---|---|---|
| PCT Chapter I Request | International Bureau World Intellectual Property Organization (Geneva, Switzerland) | 29 Dec. 2003 | PCT/IB03/06220 |

Or perhaps the examiner wants a listing of the countries that were designated in the PCT Chapter I filing:

**Countries/Jurisdictions Designated in PCT Chapter I Filing (see page 3 of Request, attached to Miller Decl.)**

1. Aripo
2. Eurasian Patent
3. European
4. OAPI
5. United Arab Emirates
6. Antigua and Barbuda
7. Albania
8. Armenia
9. Austria
10. Australia
11. Azerbaijan
12. Bosnia and Herzegovina
13. Barbados
14. Bulgaria
15. Brazil
16. Belarus
17. Belize
18. Canada
19. Switzerland and Lichtenstein
20. China
21. Colombia
22. Costa Rica
23. Cuba
24. Czech Republic
25. Germany
26. Denmark
27. Dominica
28. Algeria
29. Ecuador
30. Estonia
31. Spain
32. Finland
33. United Kingdom
34. Grenada
35. Georgia
36. Ghana
37. Gambia
38. Croatia

39. Hungary
40. Indonesia
41. Israel
42. India
43. Iceland
44. Japan
45. Kenya
46. Kyrgyzstan
47. Democratic People's Republic of Korea
48. Republic of Korea
49. Kazakhstan
50. Saint Lucia
51. Sri Lanka
52. Liberia
53. Lesotho
54. Lithuania
55. Luxembourg
56. Latvia
57. Morocco
58. Republic of Moldova
59. Madagascar
60. The Former Yuogslav Republic of Macedonia
61. Mongolia
62. Malawi
63. Mexico
64. Mozambique
65. Nicaragua
66. Norway
67. New Zealand
68. Oman
69. Papua New Guinea
70. Phillipines
71. Poland
72. Portugal
73. Romania
74. Russian Federation
75. Seychelles
76. Sudan
77. Sweden
78. Singapore
79. Slovakia
80. Sierra Leone
81. Syrian Arab Republic
82. Tajikistan
83. Turkmenistan
84. Tunisia
85. Turkey
86. Trinidad and Tobago
87. United Republic of Tanzania
88. Ukraine
89. Uganda
90. United States of America
91. Uzbekistan
92. Saint Vincent and the Grenadines
93. Viet Nam
94. Serbia and Montenegro
95. South Africa
96. Zambia
97. Zimbabwe
98. Botswana
99. Egypt

Or perhaps the examiner objects to the applicant's statement that the PCT filing was made "on or about" December 29, 2003. The applicant hereby states that the PCT filing was made ***on*** December 29, 2003. (See Decl. of John Miller).

The applicant has now clearly complied with the requirements of 37 CFR 5.25 (1) and (2).

***The PCT Filing Was Made Through Error and Without Deceptive Intent***

As explained in the applicants' original petition, the PCT filing in this case was made because the applicants, who are laypersons and were not familiar with the requirements for a foreign filing license, engaged British counsel to file a foreign application. As explained below, British counsel was unaware that a foreign filing license had not been obtained, and therefore made the foreing filing as a result of an honest error.

The applicants now submit a declaration from their British counsel, John Miller. Mr. Miller is a patent attorney employed by the firm Brookes Batchellor LLP in Tunbridge Wells, U.K. Mr. Miller met with applicant Aldo Marra on December 8, 2003, and thereafter he filed the foreign application identified above on December 29, 2003.

At the time he made the filing, Mr. Miller was unaware that Mr. Marra had not yet received a foreign filing license from the USPTO. Mr. Miller knew that the US application had been filed nearly five months before, and he assumed that the foreign filing license had been issued by the USPTO. In fact, the issuance of the filing receipt and foreign filing license were delayed because a batch of applications (including the present application) were apparently overlooked by the OIPE. The applicant has now

received a foreign filing license, effective as of March 10, 2004.

Therefore, the foreign filing was made through error and without deceptive intent, since foreign counsel mistakenly but reasonably assumed that a foreign filing of the subject application would be allowed given the time that had elapsed since the US filing. For further details regarding the foreign filing, please see the Declaration of John Miller, the contents of which are incorporated by reference herein.

Therefore, the applicants respectfully petition for a foreign filing license with an effective date of December 1, 2003.

Dated: 4/27/2004

Daniel P. Maguire

Daniel P. Maguire

OIPE JC42
APR 30 2004
PATENT & TRADEMARK OFFICE

PTO/SB/21 (02-04)
Approved for use through 07/31/2006. OMB 0651-0031
U.S. Patent and Trademark Office; U.S. DEPARTMENT OF COMMERCE
Under the Paperwork Reduction Act of 1995, no persons are required to respond to a collection of information unless it displays a valid OMB control number.

# TRANSMITTAL FORM

*(to be used for all correspondence after initial filing)*

| | |
|---|---|
| Application Number | 10/624,792 |
| Filing Date | 7/22/2003 |
| First Named Inventor | Aldo Marra |
| Art Unit | |
| Examiner Name | |
| Total Number of Pages in This Submission: 28 | Attorney Docket Number: 126.01 |

## ENCLOSURES *(Check all that apply)*

- [ ] Fee Transmittal Form
  - [ ] Fee Attached
- [ ] Amendment/Reply
  - [ ] After Final
  - [ ] Affidavits/declaration(s)
- [ ] Extension of Time Request
- [ ] Express Abandonment Request
- [ ] Information Disclosure Statement
- [ ] Certified Copy of Priority Document(s)
- [ ] Response to Missing Parts/ Incomplete Application
  - [ ] Response to Missing Parts under 37 CFR 1.52 or 1.53
- [ ] Drawing(s)
- [ ] Licensing-related Papers
- [ ] Petition
- [ ] Petition to Convert to a Provisional Application
- [ ] Power of Attorney, Revocation Change of Correspondence Address
- [ ] Terminal Disclaimer
- [ ] Request for Refund
- [ ] CD, Number of CD(s) _____
- [ ] After Allowance communication to Technology Center (TC)
- [ ] Appeal Communication to Board of Appeals and Interferences
- [ ] Appeal Communication to TC **(Appeal Notice, Brief, Reply Brief)**
- [ ] Proprietary Information
- [ ] Status Letter
- [x] Other Enclosure(s) (please Identify below):
  (i) Resp. to Dec. on Req. under 37 CFR 5.25,
  (ii) Supporting Decl. of John Miller

Remarks

## SIGNATURE OF APPLICANT, ATTORNEY, OR AGENT

| | |
|---|---|
| Firm or Individual name | Daniel P. Maguire |
| Signature | Dan Mag |
| Date | April 27, 2004 |

## CERTIFICATE OF TRANSMISSION/MAILING

I hereby certify that this correspondence is being facsimile transmitted to the USPTO or deposited with the United States Postal Service with sufficient postage as first class mail in an envelope addressed to: Commissioner for Patents, P.O. Box 1450, Alexandria, VA 22313-1450 on the date shown below.

Mail Stop Petition

| | | | |
|---|---|---|---|
| Typed or printed name | Daniel P. Maguire | | |
| Signature | Dan Mag | Date | April 27, 2004 |

This collection of information is required by 37 CFR 1.5. The information is required to obtain or retain a benefit by the public which is to file (and by the USPTO to process) an application. Confidentiality is governed by 35 U.S.C. 122 and 37 CFR 1.14. This collection is estimated to 2 hours to complete, including gathering, preparing, and submitting the completed application form to the USPTO. Time will vary depending upon the individual case. Any comments on the amount of time you require to complete this form and/or suggestions for reducing this burden, should be sent to the Chief Information Officer, U.S. Patent and Trademark Office, U.S. Department of Commerce, P.O. Box 1450, Alexandria, VA 22313-1450. DO NOT SEND FEES OR COMPLETED FORMS TO THIS ADDRESS. **SEND TO: Commissioner for Patents, P.O. Box 1450, Alexandria, VA 22313-1450.**

*If you need assistance in completing the form, call 1-800-PTO-9199 and select option 2.*

O.I.P.E. JC42
APR 30 2004
PATENT & TRADEMARK OFFICE

**UNITED STATES PATENT AND TRADEMARK OFFICE**

| | | |
|---|---|---|
| In re Application of Aldo Marra, et al. | ) | |
| | ) | |
| Application No.: 10/624,792 | ) | Group Art Unit: Unknown |
| | ) | |
| Filed: July 22, 2003 | ) | Examiner: Unknown |
| | ) | |
| For: Portable Door Lock | ) | Attorney Ref. No.: 126.01 |
| | ) | |

***Declaration of John Miller in Support of Petition for Retroactive Foreign Filing License***

Commissioner for Patents
P.O. Box 1450
Alexandria, Virginia 22313-1450

Dear Sir or Madam:

I, John Miller, am a UK patent attorney employed by the firm Brookes Batchellor LLP and working in Tunbridge Wells, United Kingdom. I make this declaration based on personal knowledge, and could and would competently testify to these matters if called upon to do so:

1. In December 2003, I met Mr. Aldo Marra at the firm's office in Tunbridge Wells to discuss the filing of an international or PCT patent application for his portable door lock invention. I agreed that the firm would make such a filing for Mr. Marra through the International Bureau of the World Intellectual Property Organization. Thereafter, on December 29, 2003, the firm filed a PCT Chapter I Request with the International Bureau in Geneva, Switzerland, for the portable door lock that was invented by Mr. Marra and his wife, Yael Marra. A copy of that filing is attached.

2. At the time the filing was made, I was unaware that Mr. Marra had not yet received a foreign filing license from the United States Patent & Trademark Office.

Mr. Marra informed me that he had filed a corresponding U.S. application on July 22, 2003 and provided me with a copy of the application and the application number. He did not inform me that administrative problems at the US Patent & Trademark Office had delayed the issuance of a filing receipt and foreign filing license. Prior to making the PCT filing, I had no contact with Mr Marra's U.S. patent counsel, Daniel Maguire. The filing of the PCT Request before the issuance of a foreign filing license was an error made without deceptive intent, since I was unaware of the fact that no foreign filing receipt had been received at the time of the PCT filing.

I declare under penalty of perjury under the laws of the United States of America that the foregoing is true and correct.

Executed on...8 April.....2004, at Tunbridge Wells, United Kingdom

John Miller

FILE COPY

# PCT

## REQUEST

The undersigned requests that the present international application be processed according to the Patent Cooperation Treaty.

For receiving Office use only

International Application No.

International Filing Date

Name of receiving Office and "PCT International Application"

Applicant's or agent's file reference *(if desired) (12 characters maximum)* MJ/AMp/03540

**Box No. I TITLE OF INVENTION**

PORTABLE DOOR LOCK

**Box No. II APPLICANT** [X] This person is also inventor

Name and address: *(Family name followed by given name; for a legal entity, full official designation. The address must include postal code and name of country. The country of the address indicated in this Box is the applicant's State (that is, country) of residence if no State of residence is indicated below.)*

MARRA, Aldo
PO Box 398
Davis
California 95617
USA

Telephone No.

Facsimile No.

Teleprinter No.

Applicant's registration No. with the Office

State *(that is, country)* of nationality: US

State *(that is, country)* of residence: US

This person is applicant for the purposes of: [X] all designated States [ ] all designated States except the United States of America [ ] the United States of America only [ ] the States indicated in the Supplemental Box

**Box No. III FURTHER APPLICANT(S) AND/OR (FURTHER) INVENTOR(S)**

Name and address: *(Family name followed by given name; for a legal entity, full official designation. The address must include postal code and name of country. The country of the address indicated in this Box is the applicant's State (that is, country) of residence if no State of residence is indicated below.)*

MARRA, Yael
644 Alvarado, Apt. 231
Davis
California 95616
USA

This person is:

[ ] applicant only

[X] applicant and inventor

[ ] inventor only *(If this check-box is marked, do not fill in below.)*

Applicant's registration No. with the Office

State *(that is, country)* of nationality: US

State *(that is, country)* of residence: US

This person is applicant for the purposes of: [X] all designated States [ ] all designated States except the United States of America [ ] the United States of America only [ ] the States indicated in the Supplemental Box

[ ] Further applicants and/or (further) inventors are indicated on a continuation sheet.

**Box No. IV AGENT OR COMMON REPRESENTATIVE; OR ADDRESS FOR CORRESPONDENCE**

The person identified below is hereby/has been appointed to act on behalf of the applicant(s) before the competent International Authorities as: [X] agent [ ] common representative

Name and address: *(Family name followed by given name; for a legal entity, full official designation. The address must include postal code and name of country.)*

BROOKES BATCHELLOR LLP
102-108 CLERKENWELL ROAD
LONDON
EC1M 5SA
UNITED KINGDOM

Telephone No. + 44 1892 510600

Facsimile No. + 44 207 253 1214

Teleprinter No.

Agent's registration No. with the Office 08142291001

[ ] **Address for correspondence:** Mark this check-box where no agent or common representative is/has been appointed and the space above is used instead to indicate a special address to which correspondence should be sent.

**Continuation of Box No. III FURTHER APPLICANT(S) AND/OR (FURTHER) INVENTOR(S)**

*If none of the following sub-boxes is used, this sheet should not be included in the request.*

Name and address: *(Family name followed by given name; for a legal entity, full official designation. The address must include postal code and name of country. The country of the address indicated in this Box is the applicant's State (that is, country) of residence if no State of residence is indicated below.)*

MILLER, John
1 Boyne Park
Tunbridge Wells
Kent TN4 8EL
United Kingdom

This person is:
- [x] applicant only
- [ ] applicant and inventor
- [ ] inventor only *(If this check-box is marked, do not fill in below.)*

Applicant's registration No. with the Office

State *(that is, country)* of nationality: GB

State *(that is, country)* of residence: GB

This person is applicant for the purposes of: [ ] all designated States [ ] all designated States except the United States of America [ ] the United States of America only [x] the States indicated in the Supplemental Box

Name and address: *(Family name followed by given name; for a legal entity, full official designation. The address must include postal code and name of country. The country of the address indicated in this Box is the applicant's State (that is, country) of residence if no State of residence is indicated below.)*

This person is:
- [ ] applicant only
- [ ] applicant and inventor
- [ ] inventor only *(If this check-box is marked, do not fill in below.)*

Applicant's registration No. with the Office

State *(that is, country)* of nationality:

State *(that is, country)* of residence:

This person is applicant for the purposes of: [ ] all designated States [ ] all designated States except the United States of America [ ] the United States of America only [ ] the States indicated in the Supplemental Box

Name and address: *(Family name followed by given name; for a legal entity, full official designation. The address must include postal code and name of country. The country of the address indicated in this Box is the applicant's State (that is, country) of residence if no State of residence is indicated below.)*

This person is:
- [ ] applicant only
- [ ] applicant and inventor
- [ ] inventor only *(If this check-box is marked, do not fill in below.)*

Applicant's registration No. with the Office

State *(that is, country)* of nationality:

State *(that is, country)* of residence:

This person is applicant for the purposes of: [ ] all designated States [ ] all designated States except the United States of America [ ] the United States of America only [ ] the States indicated in the Supplemental Box

Name and address: *(Family name followed by given name; for a legal entity, full official designation. The address must include postal code and name of country. The country of the address indicated in this Box is the applicant's State (that is, country) of residence if no State of residence is indicated below.)*

This person is:
- [ ] applicant only
- [ ] applicant and inventor
- [ ] inventor only *(If this check-box is marked, do not fill in below.)*

Applicant's registration No. with the Office

State *(that is, country)* of nationality:

State *(that is, country)* of residence:

This person is applicant for the purposes of: [ ] all designated States [ ] all designated States except the United States of America [ ] the United States of America only [ ] the States indicated in the Supplemental Box

[ ] Further applicants and/or (further) inventors are indicated on another continuation sheet.

**Box No. V DESIGNATION OF STATES** *Mark the applicable check-boxes below; at least one must be marked.*

The following designations are hereby made under Rule 4.9(a):

**Regional Patent**

☒ **AP** **ARIPO Patent:** **GH** Ghana, **GM** Gambia, **KE** Kenya, **LS** Lesotho, **MW** Malawi, **MZ** Mozambique, **SD** Sudan, **SL** Sierra Leone, **SZ** Swaziland, **TZ** United Republic of Tanzania, **UG** Uganda, **ZM** Zambia, **ZW** Zimbabwe, and any other State which is a Contracting State of the Harare Protocol and of the PCT *(if other kind of protection or treatment desired, specify on dotted line)* .....

☒ **EA** **Eurasian Patent:** **AM** Armenia, **AZ** Azerbaijan, **BY** Belarus, **KG** Kyrgyzstan, **KZ** Kazakhstan, **MD** Republic of Moldova, **RU** Russian Federation, **TJ** Tajikistan, **TM** Turkmenistan, and any other State which is a Contracting State of the Eurasian Patent Convention and of the PCT

☒ **EP** **European Patent:** **AT** Austria, **BE** Belgium, **BG** Bulgaria, **CH & LI** Switzerland and Liechtenstein, **CY** Cyprus, **CZ** Czech Republic, **DE** Germany, **DK** Denmark, **EE** Estonia, **ES** Spain, **FI** Finland, **FR** France, **GB** United Kingdom, **GR** Greece, **HU** Hungary, **IE** Ireland, **IT** Italy, **LU** Luxembourg, **MC** Monaco, **NL** Netherlands, **PT** Portugal, **RO** Romania, **SE** Sweden, **SI** Slovenia, **SK** Slovakia, **TR** Turkey, and any other State which is a Contracting State of the European Patent Convention and of the PCT

☒ **OA** **OAPI Patent:** **BF** Burkina Faso, **BJ** Benin, **CF** Central African Republic, **CG** Congo, **CI** Côte d'Ivoire, **CM** Cameroon, **GA** Gabon, **GN** Guinea, **GQ** Equatorial Guinea, **GW** Guinea-Bissau, **ML** Mali, **MR** Mauritania, **NE** Niger, **SN** Senegal, **TD** Chad, **TG** Togo, and any other State which is a member State of OAPI and a Contracting State of the PCT *(if other kind of protection or treatment desired, specify on dotted line)* .....

**National Patent** *(if other kind of protection or treatment desired, specify on dotted line)*:

| | | |
|---|---|---|
| ☒ **AE** United Arab Emirates | ☒ **HR** Croatia | ☒ **OM** Oman |
| ☒ **AG** Antigua and Barbuda | ☒ **HU** Hungary | ☒ **PG** Papua New Guinea |
| ☒ **AL** Albania | ☒ **ID** Indonesia | ☒ **PH** Philippines |
| ☒ **AM** Armenia | ☒ **IL** Israel | ☒ **PL** Poland |
| ☒ **AT** Austria | ☒ **IN** India | ☒ **PT** Portugal |
| ☒ **AU** Australia | ☒ **IS** Iceland | ☒ **RO** Romania |
| ☒ **AZ** Azerbaijan | ☒ **JP** Japan | ☒ **RU** Russian Federation |
| ☒ **BA** Bosnia and Herzegovina | ☒ **KE** Kenya | |
| ☒ **BB** Barbados | ☒ **KG** Kyrgyzstan | ☒ **SC** Seychelles |
| ☒ **BG** Bulgaria | ☒ **KP** Democratic People's Republic of Korea | ☒ **SD** Sudan |
| ☒ **BR** Brazil | | ☒ **SE** Sweden |
| ☒ **BY** Belarus | ☒ **KR** Republic of Korea | ☒ **SG** Singapore |
| ☒ **BZ** Belize | ☒ **KZ** Kazakhstan | ☒ **SK** Slovakia |
| ☒ **CA** Canada | ☒ **LC** Saint Lucia | ☒ **SL** Sierra Leone |
| ☒ **CH & LI** Switzerland and Liechtenstein | ☒ **LK** Sri Lanka | ☒ **SY** Syrian Arab Republic |
| ☒ **CN** China | ☒ **LR** Liberia | ☒ **TJ** Tajikistan |
| ☒ **CO** Colombia | ☒ **LS** Lesotho | ☒ **TM** Turkmenistan |
| ☒ **CR** Costa Rica | ☒ **LT** Lithuania | ☒ **TN** Tunisia |
| ☒ **CU** Cuba | ☒ **LU** Luxembourg | ☒ **TR** Turkey |
| ☒ **CZ** Czech Republic | ☒ **LV** Latvia | ☒ **TT** Trinidad and Tobago |
| ☒ **DE** Germany | ☒ **MA** Morocco | |
| ☒ **DK** Denmark | ☒ **MD** Republic of Moldova | ☒ **TZ** United Republic of Tanzania |
| ☒ **DM** Dominica | | ☒ **UA** Ukraine |
| ☒ **DZ** Algeria | ☒ **MG** Madagascar | ☒ **UG** Uganda |
| ☒ **EC** Ecuador | ☒ **MK** The former Yugoslav Republic of Macedonia | ☒ **US** United States of America |
| ☒ **EE** Estonia | | |
| ☒ **ES** Spain | ☒ **MN** Mongolia | ☒ **UZ** Uzbekistan |
| ☒ **FI** Finland | ☒ **MW** Malawi | ☒ **VC** Saint Vincent and the Grenadines |
| ☒ **GB** United Kingdom | ☒ **MX** Mexico | ☒ **VN** Viet Nam |
| ☒ **GD** Grenada | ☒ **MZ** Mozambique | ☒ **YU** Serbia and Montenegro |
| ☒ **GE** Georgia | ☒ **NI** Nicaragua | ☒ **ZA** South Africa |
| ☒ **GH** Ghana | ☒ **NO** Norway | ☒ **ZM** Zambia |
| ☒ **GM** Gambia | ☒ **NZ** New Zealand | ☒ **ZW** Zimbabwe |

Check-boxes below reserved for designating States which have become party to the PCT after issuance of this sheet:

☒ BW Botswana ☒ EG Egypt ☐

**Precautionary Designation Statement:** In addition to the designations made above, the applicant also makes under Rule 4.9(b) all other designations which would be permitted under the PCT except any designation(s) indicated in the Supplemental Box as being excluded from the scope of this statement. The applicant declares that those additional designations are subject to confirmation and that any designation which is not confirmed before the expiration of 15 months from the priority date is to be regarded as withdrawn by the applicant at the expiration of that time limit. *(Confirmation (including fees) must reach the receiving Office within the 15-month time limit.)*

**Supplemental Box** *If the Supplemental Box is not used, this sheet should not be included in the request.*

1. *If, in any of the Boxes, except Boxes Nos. VIII(i) to (v) for which a special continuation box is provided,* ***the space is insufficient*** *to furnish all the information: in such case, write "Continuation of Box No...." (indicate the number of the Box) and furnish the information in the same manner as required according to the captions of the Box in which the space was insufficient, in particular:*

   (i) ***if more than two persons are to be indicated as applicants and/or inventors*** *and no "continuation sheet" is available: in such case, write "Continuation of Box No. III" and indicate for each additional person the same type of information as required in Box No. III. The country of the address indicated in this Box is the applicant's State (that is, country) of residence if no State of residence is indicated below;*

   (ii) *if, in Box No. II or in any of the sub-boxes of Box No. III, the indication* ***"the States indicated in the Supplemental Box"*** *is checked: in such case, write "Continuation of Box No. II" or "Continuation of Box No. III" or "Continuation of Boxes No. II and No. III" (as the case may be), indicate the name of the applicant(s) involved and, next to (each) such name, the State(s) (and/or, where applicable, ARIPO, Eurasian, European or OAPI patent) for the purposes of which the named person is applicant;*

   (iii) *if, in Box No. II or in any of the sub-boxes of Box No. III,* ***the inventor or the inventor/applicant is not inventor for the purposes of all designated States or for the purposes of the United States of America****: in such case, write "Continuation of Box No. II" or "Continuation of Box No. III" or "Continuation of Boxes No. II and No. III" (as the case may be), indicate the name of the inventor(s) and, next to (each) such name, the State(s) (and/or, where applicable, ARIPO, Eurasian, European or OAPI patent) for the purposes of which the named person is inventor;*

   (iv) *if, in addition to the agent(s) indicated in Box No. IV, there are* ***further agents****: in such case, write "Continuation of Box No. IV" and indicate for each further agent the same type of information as required in Box No. IV;*

   (v) *if, in Box No. V, the name of any State (or OAPI) is accompanied by the indication "****patent of addition****," or "****certificate of addition****," or if, in Box No. V, the name of the United States of America is accompanied by an indication "****continuation****" or "****continuation-in-part****": in such case, write "Continuation of Box No. V" and the name of each State involved (or OAPI), and after the name of each such State (or OAPI), the number of the parent title or parent application and the date of grant of the parent title or filing of the parent application;*

   (vi) *if, in Box No. VI, there are* ***more than five earlier applications whose priority is claimed****: in such case, write "Continuation of Box No. VI" and indicate for each additional earlier application the same type of information as required in Box No. VI.*

2. *If, with regard to the* ***precautionary designation statement*** *contained in Box No. V, the applicant wishes to exclude any State(s) from the scope of that statement: in such case, write "Designation(s) excluded from precautionary designation statement" and indicate the name or two-letter code of each State so excluded.*

Continuation of Box No. III
MILLER, John is applicant for TT only

**Box No. VI PRIORITY CLAIM**

The priority of the following earlier application(s) is hereby claimed:

| Filing date of earlier application *(day/month/year)* | Number of earlier application | Where earlier application is: | | |
|---|---|---|---|---|
| | | national application: country or Member of WTO | regional application:* regional Office | international application: receiving Office |
| item (1) 22/07/2003 | 10/624792 | US | | |
| item (2) | | | | |
| item (3) | | | | |
| item (4) | | | | |
| item (5) | | | | |

☐ Further priority claims are indicated in the Supplemental Box.

The receiving Office is requested to prepare and transmit to the International Bureau a certified copy of the earlier application(s) *(only if the earlier application was filed with the Office which for the purposes of this international application is the receiving Office)* identified above as:

☐ all items ☐ item (1) ☐ item (2) ☐ item (3) ☐ item (4) ☐ item (5) ☐ other, see Supplemental Box

* *Where the earlier application is an ARIPO application, indicate at least one country party to the Paris Convention for the Protection of Industrial Property or one Member of the World Trade Organization for which that earlier application was filed (Rule 4.10(b)(ii)):* ....

**Box No. VII INTERNATIONAL SEARCHING AUTHORITY**

**Choice of International Searching Authority (ISA)** *(if two or more International Searching Authorities are competent to carry out the international search, indicate the Authority chosen; the two-letter code may be used)*:

ISA / EP

**Request to use results of earlier search; reference to that search** *(if an earlier search has been carried out by or requested from the International Searching Authority)*:

Date *(day/month/year)* Number Country *(or regional Office)*

**Box No. VIII DECLARATIONS**

The following **declarations** are contained in Boxes Nos. VIII (i) to (v) *(mark the applicable check-boxes below and indicate in the right column the number of each type of declaration)*: Number of declarations

| | | | |
|---|---|---|---|
| ☐ | Box No. VIII (i) | Declaration as to the identity of the inventor | : |
| ☐ | Box No. VIII (ii) | Declaration as to the applicant's entitlement, as at the international filing date, to apply for and be granted a patent | : |
| ☐ | Box No. VIII (iii) | Declaration as to the applicant's entitlement, as at the international filing date, to claim the priority of the earlier application | : |
| ☐ | Box No. VIII (iv) | Declaration of inventorship (only for the purposes of the designation of the United States of America) | : |
| ☐ | Box No. VIII (v) | Declaration as to non-prejudicial disclosures or exceptions to lack of novelty | : |

**Box No. IX CHECK LIST; LANGUAGE OF FILING**

This international application **contains**:

(a) **in paper form**, the following number of sheets :

| | | |
|---|---|---|
| request (including declaration sheets) | : | 6 |
| description (excluding sequence listings and/or tables related thereto) | : | 5 |
| claims | : | 2 |
| abstract | : | 1 |
| drawings | : | 5 |
| **Sub-total number of sheets** | : | 19 |
| sequence listings | : | |
| tables related thereto | : | |
| *(for both, actual number of sheets if filed in paper form, whether or not also filed in computer readable form; see (c) below)* | | |
| **Total number of sheets** | : | 19 |

(b) ☐ **only in computer readable form** (Section 801(a)(i))
- (i) ☐ sequence listings
- (ii) ☐ tables related thereto

(c) ☐ **also in computer readable form** (Section 801(a)(ii))
- (i) ☐ sequence listings
- (ii) ☐ tables related thereto

**Type and number of carriers** (diskette, CD-ROM, CD-R or other) on which are contained the
- ☐ sequence listings: . . . . . .
- ☐ tables related thereto: . . . . . .

*(additional copies to be indicated under items 9(ii) and/or 10(ii), in right column)*

This international application is **accompanied by** the following item(s) *(mark the applicable check-boxes below and indicate in right column the number of each item)*:

| | | Number of items |
|---|---|---|
| 1. ☒ | fee calculation sheet | 1 |
| 2. ☐ | original separate power of attorney | |
| 3. ☒ | original general power of attorney | 3 |
| 4. ☐ | copy of general power of attorney; reference number, if any: . . . . . | |
| 5. ☐ | statement explaining lack of signature | |
| 6. ☐ | priority document(s) identified in Box No. VI as item(s): . . . . . | |
| 7. ☐ | translation of international application into *(language)*: . . . . . | |
| 8. ☐ | separate indications concerning deposited microorganism or other biological material | |
| 9. ☐ | sequence listings in computer readable form *(indicate type and number of carriers)* | |
| (i) ☐ | copy submitted for the purposes of international search under Rule 13*ter* only (and not as part of the international application) | |
| (ii) ☐ | *(only where check-box (b)(i) or (c)(i) is marked in left column)* additional copies including, where applicable, the copy for the purposes of international search under Rule 13*ter* | |
| (iii) ☐ | together with relevant statement as to the identity of the copy or copies with the sequence listings mentioned in left column | |
| 10. ☐ | tables in computer readable form related to sequence listings *(indicate type and number of carriers)* | |
| (i) ☐ | copy submitted for the purposes of international search under Section 802(b-*quater*) only (and not as part of the international application) | |
| (ii) ☐ | *(only where check-box (b)(ii) or (c)(ii) is marked in left column)* additional copies including, where applicable, the copy for the purposes of international search under Section 802(b-*quater*) | |
| (iii) ☐ | together with relevant statement as to the identity of the copy or copies with the tables mentioned in left column | |
| 11. ☐ | other *(specify)*: . . . . . | |

**Figure of the drawings** which should accompany the abstract: 1

**Language of filing** of the international application: ENGLISH

**Box No. X SIGNATURE OF APPLICANT, AGENT OR COMMON REPRESENTATIVE**

*Next to each signature, indicate the name of the person signing and the capacity in which the person signs (if such capacity is not obvious from reading the request).*

Brookes Batchellor LLP

BROOKES BATCHELLOR LLP

For receiving Office use only

| | |
|---|---|
| 1. Date of actual receipt of the purported international application: | 2. Drawings: ☐ received: ☐ not received: |
| 3. Corrected date of actual receipt due to later but timely received papers or drawings completing the purported international application: | |
| 4. Date of timely receipt of the required corrections under PCT Article 11(2): | |
| 5. International Searching Authority (if two or more are competent): ISA / | 6. ☐ Transmittal of search copy delayed until search fee is paid |

For International Bureau use only

Date of receipt of the record copy by the International Bureau:

*This sheet is not part of and does not count as a sheet of the international application.*

# PCT

**FEE CALCULATION SHEET**

**Annex to the Request**

For receiving Office use only

International Application No.

Date stamp of the receiving Office

Applicant's or agent's file reference: MJ/AMp/03540

Applicant: MARRA, Aldo

**CALCULATION OF PRESCRIBED FEES**

1. TRANSMITTAL FEE . . . . . 68 [T]
2. SEARCH FEE . . . . . 945 [S]

   International search to be carried out by _____

   *(If two or more International Searching Authorities are competent to carry out the international search, indicate the name of the Authority which is chosen to carry out the international search.)*

3. INTERNATIONAL FEE

   **Basic Fee**

   Where items (b) and/or (c) of Box No. IX apply, enter **Sub-total number of sheets**
   Where items (b) and (c) of Box No. IX do not apply, enter **Total number of sheets** } _____

   [b1] first 30 sheets . . . . . 444 [b1]

   [b2] _____ x _____ = _____ [b2]
   number of sheets in excess of 30 — fee per sheet

   [b3] additional component (only if sequence listings and/or tables related thereto are filed in computer readable form under Section 801(a)(i), or both in that form and on paper, under Section 801(a)(ii)):

   400 x _____ = _____ [b3]
   fee per sheet

   Add amounts entered at b1, b2 and b3 and enter total at B . . . . 444 [B]

   **Designation Fees**

   The international application contains all designations.

   5 x 96 = 480 [D]
   number of designation fees payable *(maximum 5)* — amount of designation fee

   Add amounts entered at B and D and enter total at I . . . . . 924 [I]

   *(Applicants from certain States are entitled to a reduction of 75% of the international fee. Where the applicant is (or all applicants are) so entitled, the total to be entered at I is 25% of the sum of the amounts entered at B and D.)*

4. FEE FOR PRIORITY DOCUMENT *(if applicable)* . . . . . [P]
5. TOTAL FEES PAYABLE . . . . . EUR 1,937 TOTAL

   Add amounts entered at T, S, I and P, and enter total in the TOTAL box

☐ The designation fees are not paid at this time.

**MODE OF PAYMENT**

☐ authorization to charge deposit account (see below) ☐ postal money order ☐ cash ☐ coupons

☒ cheque ☐ bank draft ☐ revenue stamps ☐ other *(specify)*:

**AUTHORIZATION TO CHARGE (OR CREDIT) DEPOSIT ACCOUNT**

*(This mode of payment may not be available at all receiving Offices)*

☐ Authorization to charge the total fees indicated above.

☐ *(This check-box may be marked only if the conditions for deposit accounts of the receiving Office so permit)* Authorization to charge any deficiency or credit any overpayment in the total fees indicated above.

☐ Authorization to charge the fee for priority document.

Receiving Office: RO/ _____

Deposit Account No.: _____

Date: _____

Name: _____

Signature: _____



*See Notes to the fee calculation sheet*

FILE COPY



# PORTABLE DOOR LOCK

## Field of the Invention

The present invention relates to portable door locks.

## Background of the Invention

Portable door locks of various designs have been created to secure doors that do not have operable locks, or for travelers or others who wish to personally control access to a room. Such portable door locks can be especially useful in public accommodations, including hotels, dormitories, apartments, and cruise ships.

Prior portable door locks possess several disadvantages. Many are complex and not cost effective to manufacture. Others can be picked, and those with securing pins can be wrenched or pried from the outside by intruders. Some portable door locks include notches, teeth or contain rough edges which may cause injury to the user during installation or removal. A number of portable door locks require special tools to install, or can only work with doorknobs or doorknob shanks of a specific size or shape. Still other portable door locks mar the door when installed, or detract from the door's appearance. Chain locking portable door locks have a low yield strength, and allow the door to be opened several inches, which makes it possible for the chain to be cut by an intruder. Thus, previous portable door locks have not enjoyed large scale commercial acceptance.

Therefore, there is a need for an improved portable door lock that does not damage doors or door frames, and that is simple, secure, compact, strong, lightweight, and inexpensive to manufacture.

## Summary of the Invention

The present invention is a portable door lock comprising a strike plate, a magnet, and a bolt.

## Brief Description of the Drawings

Figure 1 is an environmental perspective view of a door and door frame with a portable door lock according to an embodiment of the present invention.

Figure 2 is an exploded perspective view of a portable door lock according to an embodiment of the present invention.

Figure 3 is a top cross-section view taken along lines 3-3 of Figure 1.

Figure 4 is a side view of a strike plate according to an embodiment of the present invention.

Figure 5 is a side view of a U-bolt according to an embodiment of the present invention.

Figure 6 is a side view of a magnet according to an embodiment of the present invention.

Figure 7 is a front view of a portable door lock according to an embodiment of the present invention, as installed in a door.

Figure 8 corresponds to the view of Figure 3, but shows a portable door lock according to an embodiment of the present invention as configured for a door with a greater displacement between the molding and the door than in Figure 3.

Detailed Description

The present invention is a portable door lock comprising: a strike plate 10, a U-bolt 20, and a magnet 30. As shown in Figures 1, 2, 3, 4, 7 and 8, the strike plate 10 is a plate-type structure with apertures (12, 13, 14, 15) for the U-bolt, and with a protuberance or boss 16 for holding the strike plate 10 in the recess of the deadbeat latch 50 or doorknob strike plate.

In one embodiment, the strike plate 10 has two sets of apertures. See Figure 2. The first set of apertures 12, 13 can be used when the distance between the molding 70 and the door 40 is relatively small, as shown in Figure 3. The second set of apertures 14, 15 can be used when the distance between the molding 70 and the door 40 is relatively greater, as shown in Figure 8. In alternative embodiments, one set of apertures can be used, or even a single aperture.

The strike plate 10 also has a hooked boss 16 at one end that engages the recess within a dead bolt latch 50 of a door frame 60, see Figures 1, 3, and 8, or the recess of a conventional doorknob strike plate within a door frame 60. Thus the present invention can work with any door frame that has a recess, whether that recess is part of a dead bolt or conventional door lock.

The strike plate 10 also has an arm 17, and a handle 18. See Figures 2, 3, 4, 7, 8. Users can grip the handle 18 when inserting the strike plate 10 into the recess of the door frame, thereby making installation easier.

The strike plate 10 can be made of many different materials, including metals such as iron and stainless steel, or metal coated plastic, or magnetized ceramic.

As shown best in Figures 2, 3, 5, 7, and 8, the U-bolt 20 has arms 22, 24 for fitting through the strike plate's apertures 12, 13, 14, 15. Like the strike plate, the U-

bolt 20 can be made of many different materials, including but not limited to metals such as iron and stainless steel, or metal coated plastic, or magnetized ceramic.

Although a U-bolt is shown, many different types of bolts or fastening devices can be used with the present invention. For instance, in one alternative embodiment, the U-bolt could have a pin that is placed between slots at the end of the U-bolt, thereby improving the U-bolt's strength. For purposes of this patent, the term "bolt" shall be used to generically denote any bolt, pin, or other structure that can fit into or through the aperture or apertures of the strike plate.

The magnetic bar 30 can be virtually any magnet that is sized and shaped so as to fit in the area between the strike plate 10, the U-bolt 20, and the door 40. See Figure 1. As shown in Figures 1, 2, 3, 6, 7, and 8, in one embodiment the magnetic bar 30 is rectangular. The magnet can be sized so that when positioned in one orientation, it can accommodate a relatively narrow offset between the molding 70 and the door 40, and when positioned in a second orientation, it can accommodate a relatively wide offset between the molding 70 and the door 40. Compare Figures 3 and 8. The magnet can be made of traditional metallic materials, as well as magnetized ceramic.

The magnetic bar 30 also advantageously holds the pieces of the present invention together when the device is in its unassembled state. Thus, the magnet helps prevent loss of either the strike plate 10 or the U-bolt 20.

In one embodiment, both the U-bolt 20 and the strike plate 10 are made of materials that are capable of attracting and holding the magnetic bar 30. However, it is not necessary that both items be made of magnet-attracting materials – the invention can function so long as one of these items, or even just the appropriate part of one of these items, can attract and hold the magnetic bar 30.

In operation, the user grips the portable door lock by the handle 18, then places the boss 16 into the recess of the deadbeat latch 50 or doorknob strike plate. The door 40 is then closed, and the U-bolt 20 is placed through either set of apertures 12, 13, 14, 15 and the magnet is placed between the arms 22, 24 of the U-bolt, the body of the strike plate 10, and the door 40. See Figures 1 and 2. The magnet 30 adheres to the arms of the U-bolt 22, 24 and/or the body of the strike plate 10 and presses onto the face of the door 40. See Figures 1 and 2. The end of the U-bolt 20 opposite to the arms presses firmly against the door frame molding 70, thus precluding inward opening of the door. The device keeps the door securely closed and cannot be disengaged from the outside by an intruder.

The portable door lock of the present invention has many different applications, including use in public accommodations, such as hotels, dormitories, apartments, and cruise ships. The present invention may also be useful to prevent unwanted entry by the holder of a master key.

In addition to providing effective security, the device of the present invention is small, lightweight and easily packed. Having only three parts, it is easy and quick to install and uninstall, with no tools required. The device is durable and reliably constructed, as well as easily and efficiently manufactured and marketed. The present invention requires no particular door, handle, or door frame configuration, other than a standard strike plate with a recess. Neither installation nor removal of the device will damage, alter or mar the door, door frame or associated parts.

One skilled in the art will appreciate that the present invention can be practiced by other than the preferred embodiments, which are presented for purposes of illustration and not of limitation.

**CLAIMS**

1. A kit for assembling a portable door lock, comprising:
a strike plate having at least one aperture;
a bolt for insertion into said aperture; and
a magnet for adherence to said bolt and/or said strike plate.

2. A portable door lock comprising:
a strike plate having a first end and a second end;
at least one aperture at said first end of said strike plate;
a boss for insertion into a recess within a door frame at said second end of said strike plate;
a bolt for insertion into said aperture; and
a magnet for adherence to said bolt and/or said strike plate.

3. The portable door lock according to claim 2, additionally comprising a handle on said strike plate for gripping by a user.

4. The portable door lock according to either claim 2 or claim 3, wherein one of said strike plate or said bolt is metallic.

5. The portable door lock according to any one of claims 2 to 4, wherein both of said strike plate and said bolt is metallic.

6. The portable door lock according to any one of claims 2 to 5, wherein said first end of said strike plate has a pair of apertures.

7. The portable door lock according to any one of claims 2 to 5, wherein said first end of said strike plate has two pairs of apertures.

8. The portable door lock according to any one of claims 2 to 7, wherein said bolt is a U-bolt.

9. The portable door lock according to any one of claims 2 to 8, wherein said magnet is sized so as to be capable of fitting in two distinct orientations when adhering to said bolt and/or said strike plate.

10. A method of locking a door, comprising:

providing a strike plate with a handle, a boss at one end and at least one aperture at the other end;

gripping said strike plate by said handle, and inserting said boss into a recess within a door frame;

inserting a bolt through said aperture; and

inserting a magnet in an area between said bolt, said strike plate, and said door, thereby locking said door.

11. The method according to claim 10, wherein said strike plate has a pair of apertures.

12. The method according to claim 10, wherein said strike plate has two pair of apertures.

13. A portable door lock comprising:

a metal strike plate having a first end and a second end;

two pairs of apertures at said first end of said strike plate;

a boss for insertion into a recess within a door frame at said second end of said strike plate;

a metal U-bolt for insertion into one of said two pairs of apertures; and

a magnet for adherence to said bolt and said strike plate.

## ABSTRACT

A portable door lock with a strike plate, a bolt, and a magnet is disclosed. The strike plate has a boss that fits into the recess of a door frame, and has at least one aperture for accommodating the bolt. The strike plate may also have a handle for gripping by the user when inserting the strike plate into the recess of a door frame. Once the strike plate is fitted into the recess of a door frame, a bolt is inserted through the aperture or apertures, and the magnet is placed in the area between the door, the strike plate, and the bolt. The door is thereby secured, without the need for any tools.

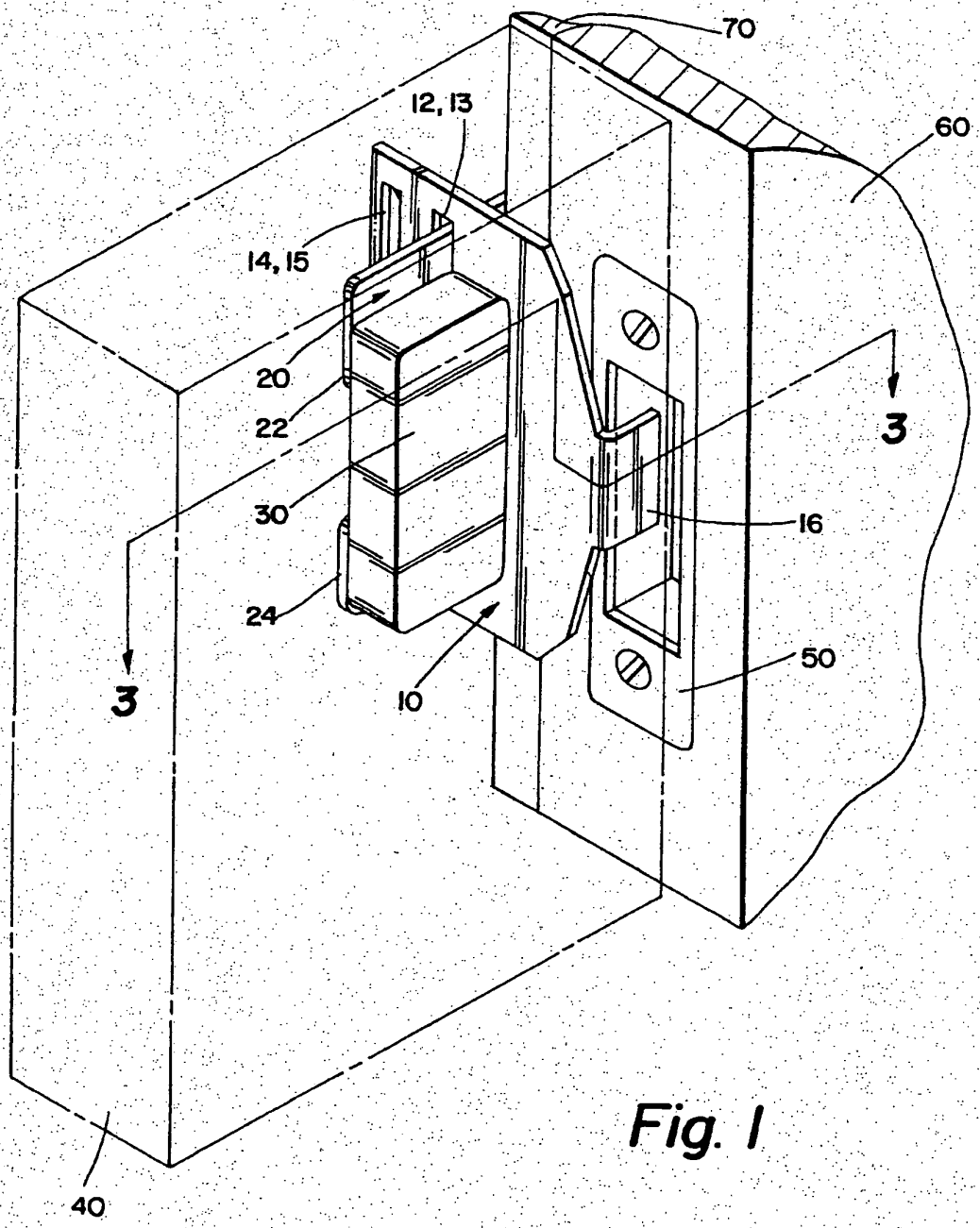


Fig. 1

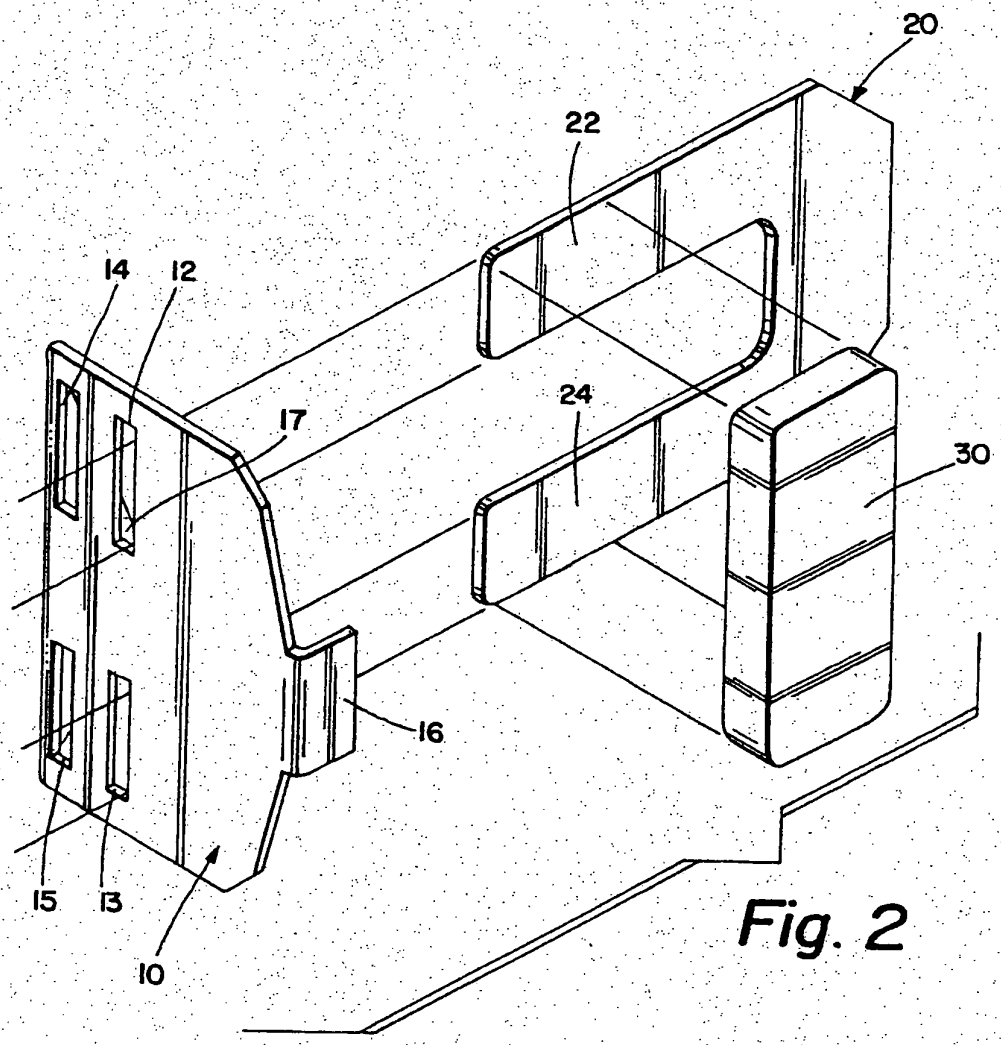


Fig. 2

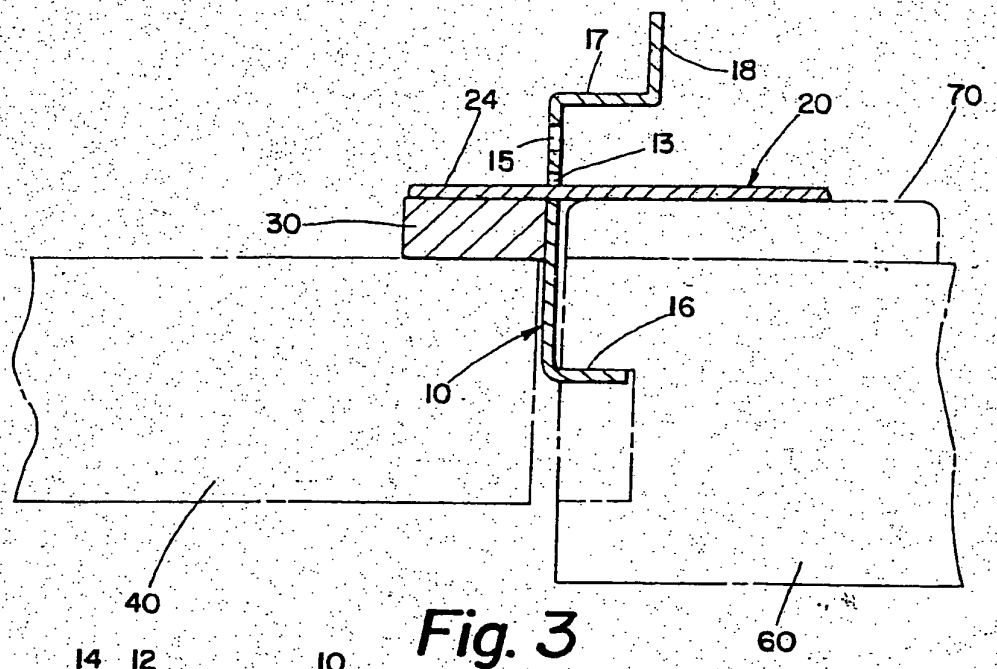


Fig. 3

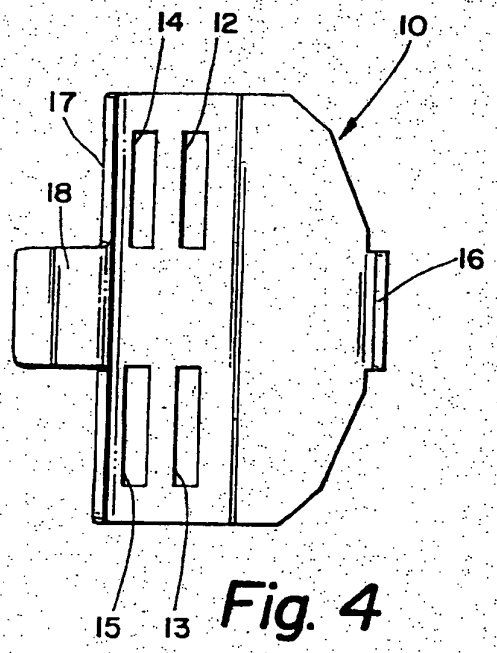


Fig. 4

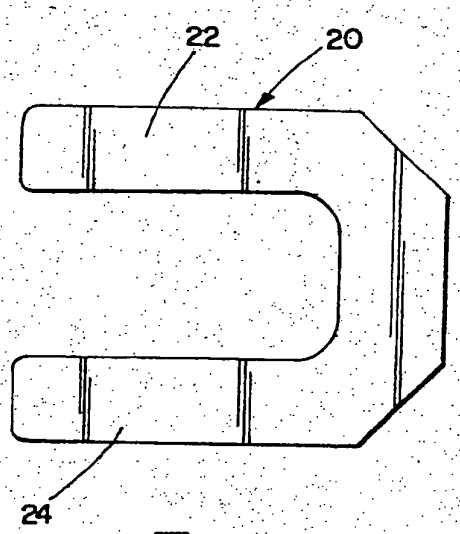


Fig. 5

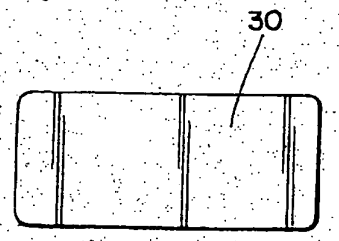


Fig. 6

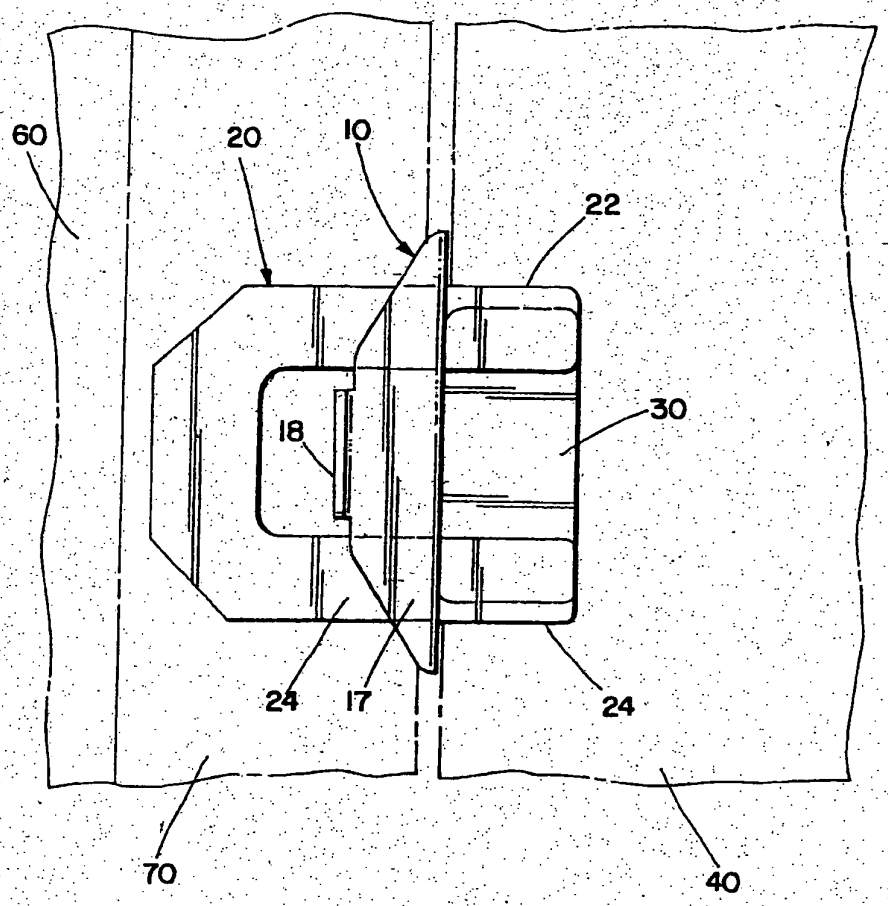


Fig. 7

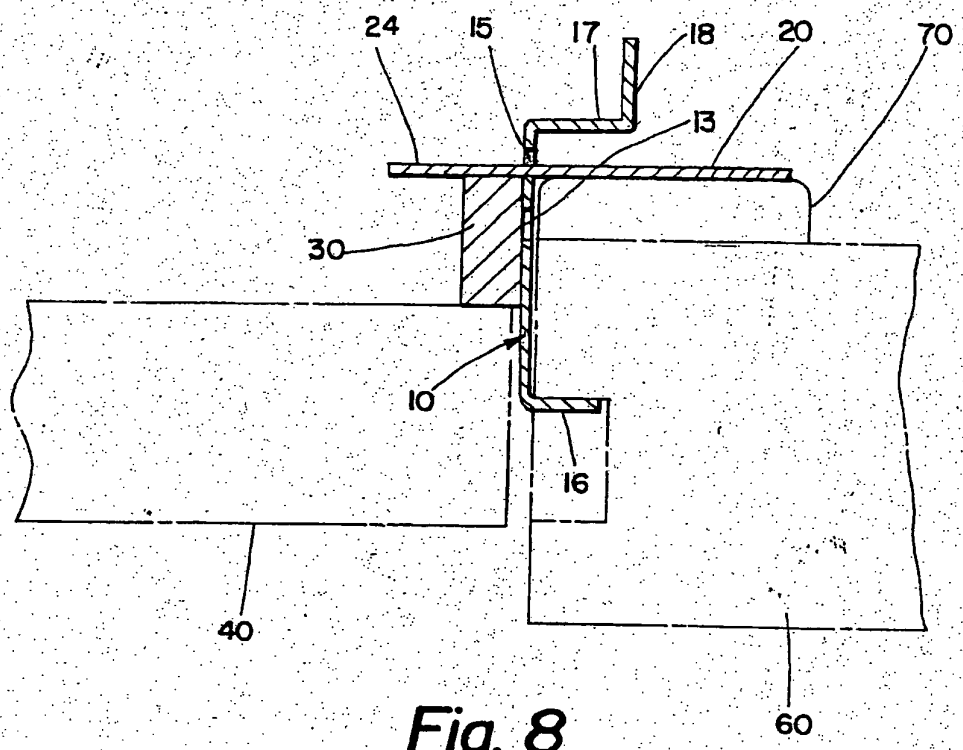


Fig. 8

- UNITED STATES PATENT AND TRADEMARK OFFICE

Commissioner for Patents
United States Patent and Trademark Office
P.O. Box 1450
Alexandria, VA 22313-145

MAILED
FROM DIRECTORS OFFICE

MAR 0 4 2005

TECHNOLOGY CENTER 3600

Daniel P. Maguire
423 E Street
Davis, CA 95616

In re application of
Aldo Marra et al
Application No. 10/624,792
Filed: July 22, 2003
For: PORTABLE DOOR LOCK

**DECISION ON REQUEST FOR WITHDRAWAL OF ATTORNEY**

This is a decision on the request filed on January 15, 2005, under 37 CFR 1.36 and MPEP 402.06, requesting permission to withdraw as the attorney of record in the above-identified application.

The request is **NOT APPROVED as Moot**.

Under 37 CFR 1.36 an attorney may withdraw only upon application to and approval by the Commissioner. It should be noted that a withdrawal is effective when approved, not when filed. Besides giving due notice to his or her client and delivering to the client all papers and property to which the client is entitled as specified under 37 CFR 10.40, approval of such a request requires that the following conditions be met:

A) Each attorney of record must sign the notice of withdrawal, or the notice must contain a clear indication of one attorney signing on behalf of another, because the Office does not recognize law firms;

B) A proper reason for the withdrawal as enumerated in 37 CFR 10.40(b) or subsection (1)-(6) of 37 CFR 10.40(c) must be provided; and

C) If withdrawal is requested in accordance with 37 CFR 10.40(c) above, there must be at least 30 days between approval of the withdrawal and the later of the expiration date of a time period for reply or the expiration date of the period which can be obtained by a petition and fee for extension of time under 37 CFR 1.136(a).

The request to withdraw as attorney in the above-identified application is not approved as moot because the attorney making the request; Daniel P. Maguire, does not now have, and apparently never has had, power of attorney in this application. There is no record of power of attorney ever being given to the attorney making the request.

Steven N. Meyers
Special Programs Examiner
Patent Technology Center 3600
(703) 308-3868

SNM/pav: 02/08/05

UNITED STATES PATENT AND TRADEMARK OFFICE

UNITED STATES DEPARTMENT OF COMMERCE
United States Patent and Trademark Office
Address: COMMISSIONER FOR PATENTS
P.O. Box 1450
Alexandria, Virginia 22313-1450
www.uspto.gov

NUTTER MCCLENNEN & FISH LLP
SEAPORT WEST
155 SEAPORT BOULEVARD
BOSTON, MA 02210-2604

Mail Date: 04/20/2010

| | | |
|---|---|---|
| **Applicant** | : Alastair McIndoe Hodges | : DECISION ON REQUEST FOR |
| **Patent Number** | : 7608175 | : RECALCULATION of PATENT |
| **Issue Date** | : 10/27/2009 | : TERM ADJUSTMENT IN VIEW |
| **Appliction No** | : 10/624,795 | : OF WYETH AND NOTICE OF INTENT TO |
| **Filed** | : 07/22/2003 | : ISSUE CERTIFICATE OF CORRECTION |
| | | : |

The Request for Recalculation is **GRANTED** to the extent indicated.

The patent term adjustment has been determined to be **259** days. The USPTO will *sua sponte* issue a certificate of correction reflecting the amount of PTA days determined by the recalculation.

Prior to the issuance of the certificate of correction, the USPTO will afford patentee an opportunity to be heard and request reconsideration. Accordingly, patentee has **one month or thirty (30) days**, whichever is longer, to file a request for reconsideration of this patent term adjustment calculation. See 35 U.S.C. 154(b)(3)(B)(ii) and 37 CFR 1.322(a)(4). No extensions of time will be granted under 37 CFR 1.136.

Patentee should use document code PET.OP if electronically filing a request for reconsideration of this patent term adjustment calculation. The patentee must also include the information required by 37 CFR 1.705(b)(2) and the fee required by 37 CFR 1.18(e). If patentee does not file a timely request for reconsideration of this patent term adjustment calculation including the information required by 37 CFR 1.705(b)(2) and the fee required by 37 CFR 1.18(e), the USPTO will issue a certificate of correction reflecting the PTA determination noted above.

Patentee should be aware that in order to preserve the right to review in the United States District Court for the District of Columbia of the USPTO patent term adjustment determination, patentee must ensure that he or she also take the steps required under 35 U.S.C. 154(b)(4)(A) in a timely manner. Nothing in the request for recalculation should be construed as providing an alternative time frame for commencing a civil action under 35 U.S.C. 154(b)(4)(A).

Any questions concerning this decision should be directed to the Office of Patent Legal Administration at 571-272-7702.

UNITED STATES PATENT AND TRADEMARK OFFICE

Commissioner for Patents
United States Patent and Trademark Office
P.O. Box 1450
Alexandria, VA 22313-1450
www.uspto.gov

VOLPE AND KOENIG, P.C.
DEPT. ICC
UNITED PLAZA, SUITE 1600
30 SOUTH 17TH STREET
PHILADELPHIA, PA 19103

COPY MAILED
MAY 0 5 2006
OFFICE OF PETITIONS

| | | |
|---|---|---|
| In re Application of | : | |
| Paul Marinier | : | |
| Application No. 10/624,812 | : | ON PETITION |
| Filed: July 22, 2003 | : | |
| Attorney Docket No. I-2-0426.1US | : | |

This is a decision on the petition under 37 CFR 1.137(b), filed April 7, 2006, to revive the above-identified application.

The petition is **GRANTED**.

This application became abandoned for failure to timely pay the issue fee and publication fee, if applicable, on or before January 27, 2006. Accordingly, this application became abandoned on January 28, 2006. A Notice of Abandonment was mailed on March 1, 2006.

This application is being forwarded to Publishing Division for processing into a patent.

Telephone inquiries concerning this matter may be directed to the undersigned at (571) 272-3228.

Edward J. Tannouse
Petitions Attorney
Office of Petitions
Office of the Deputy Commissioner
for Patent Examination Policy

## SPE RESPONSE FOR CERTIFICATE OF CORRECTION

Paper No.: _____

DATE : March 3, 2008

TO SPE OF : ART UNIT 3762

SUBJECT : Request for Certificate of Correction for Appl. No. 10/624816 patent no7272440

Please respond to this request for a certificate of correction within 7 days.

Please review the requested changes/corrections as shown in the **COCIN** document(s) in the IFW application image. No new matter should be introduced, nor should the scope or meaning of the claims be changed.

Please complete the response (see below) and forward the completed response to scanning using document code **COCX**.

Magdalene Talley

Certificates of Correction Branch

703-308-9390 ext. 116

**Thank You For Your Assistance**

**The request for issuing the above-identified correction(s) is hereby:**

Note your decision on the appropriate box.

- ☒ **Approved** — **All** changes apply.
- ☐ **Approved in Part** — Specify below which changes **do not** apply.
- ☐ **Denied** — State the reasons for denial below.

**Comments:** _____

Carl H. Layno

SPE

3762+3766

Art Unit

UNITED STATES PATENT AND TRADEMARK OFFICE

Commissioner for Patents
United States Patent and Trademark Office
P.O. Box 1450
Alexandria, VA 22313-1450
www.uspto.gov

TODD N. HATHAWAY
119 N. COMMERCIAL ST. #620
BELLINGHAM, WA 98225

COPY MAILED

JUL 06 2007

OFFICE OF PETITIONS

In re Application of

John H. Rallis :

Application No. 10/624,820

: DECISION ON PETITION

Filed: July 21, 2003

:

Attorney Docket No. P3179

This is a decision on the petition under 37 CFR 1.137(b), filed February 16, 2007, to revive the above-identified application.

The petition is **GRANTED**.

The above-cited application became abandoned for failure to file a proper reply in a timely manner to the final Office action mailed April 19, 2006, which set a shortened statutory period for reply of three (3) months from its mailing date. A response was filed on June 19, 2006. An Advisory Action mailed July 13, 2006, advised petitioner that the response of June 19, 2006, failed to place the application in condition for allowance. No further responses were filed within the allowable period. The application became abandoned on July 20 2006.

The Request for Continued Examination filed February 16, 2007, is noted and made of record.

The application is being forwarded to Technology Center 3600, GAU 3652 for further processing.

Telephone inquiries concerning this decision should be directed to the undersigned at (571) 272-3222.

Kenya A. McLaughlin
Petitions Attorney
Office of Petitions

UNITED STATES PATENT AND TRADEMARK OFFICE

UNITED STATES DEPARTMENT OF COMMERCE
United States Patent and Trademark Office
Address: COMMISSIONER FOR PATENTS
P.O. Box 1450
Alexandria, Virginia 22313-1450
www.uspto.gov

LIFESCAN/NUTTER MCCLENNEN & FISH LLP
SEAPORT WEST
155 SEAPORT BOULEVARD
BOSTON, MA 02210-2604

Mail Date: 04/20/2010

| | | |
|---|---|---|
| **Applicant** | : Alastair McIndoe Hodges | : DECISION ON REQUEST FOR |
| **Patent Number** | : 7604722 | : RECALCULATION of PATENT |
| **Issue Date** | : 10/20/2009 | : TERM ADJUSTMENT IN VIEW |
| **Appliction No** | : 10/624,823 | : OF WYETH AND NOTICE OF INTENT TO |
| **Filed** | : 07/22/2003 | : ISSUE CERTIFICATE OF CORRECTION |
| | | : |

The Request for Recalculation is **GRANTED** to the extent indicated.

The patent term adjustment has been determined to be **146** days. The USPTO will *sua sponte* issue a certificate of correction reflecting the amount of PTA days determined by the recalculation.

Prior to the issuance of the certificate of correction, the USPTO will afford patentee an opportunity to be heard and request reconsideration. Accordingly, patentee has **one month or thirty (30) days**, whichever is longer, to file a request for reconsideration of this patent term adjustment calculation. See 35 U.S.C. 154(b)(3)(B)(ii) and 37 CFR 1.322(a)(4). No extensions of time will be granted under 37 CFR 1.136.

Patentee should use document code PET.OP if electronically filing a request for reconsideration of this patent term adjustment calculation. The patentee must also include the information required by 37 CFR 1.705(b)(2) and the fee required by 37 CFR 1.18(e). If patentee does not file a timely request for reconsideration of this patent term adjustment calculation including the information required by 37 CFR 1.705(b)(2) and the fee required by 37 CFR 1.18(e), the USPTO will issue a certificate of correction reflecting the PTA determination noted above.

Patentee should be aware that in order to preserve the right to review in the United States District Court for the District of Columbia of the USPTO patent term adjustment determination, patentee must ensure that he or she also take the steps required under 35 U.S.C. 154(b)(4)(A) in a timely manner. Nothing in the request for recalculation should be construed as providing an alternative time frame for commencing a civil action under 35 U.S.C. 154(b)(4)(A).

Any questions concerning this decision should be directed to the Office of Patent Legal Administration at 571-272-7702.

UNITED STATES PATENT AND TRADEMARK OFFICE

Commissioner for Patents
United States Patent and Trademark Office
P.O. Box 1450
Alexandria, VA 22313-1450
www.uspto.gov

**TAREK N. FAHMI**
**BLAKELY SOKOLOFF TAYLOR & ZAFMAN LLP**
**1279 OAKMEAD PARKWAY**
**SUNNYVALE, CA 94085-4040**

MAILED

MAY 08 2009

OFFICE OF PETITIONS

| | | |
|---|---|---|
| In re Application of | : | |
| Teague et al. | : | DECISION ON PETITION |
| Application No. 10/624,837 | : | TO WITHDRAW |
| Filed: July 21, 2003 | : | FROM RECORD |
| Attorney Docket No. 2072.007US1 | : | |

This is a decision on the Request to Withdraw as attorney or agent of record under 37 C.F.R. § 1.36(b), filed October 8, 2004.

The request is **NOT APPROVED** because it is moot.

A review of the file record indicates that on February 14, 2005 the power of attorney to Blakely Sokoloff Taylor & Zafman LLP was revoked by the assignee of the patent application. Accordingly, the request to withdraw under 37 C.F.R. § 1.36(b) is moot.

All future communications from the Office will be directed to the below-listed address until otherwise notified by applicant.

Telephone inquires concerning this decision should be directed to the undersigned at 571-272- 7751. All other inquires concerning either the examination or status of the application should be directed to the Technology Center.

Joan Olszewski

Joan Olszewski
Petitions Examiner
Office of Petitions

cc: Schwegman, Lundberg & Woessner, P.A.
P.O. Box 2938
Minneapolis MN 55402

UNITED STATES PATENT AND TRADEMARK OFFICE

COMMISSIONER FOR PATENTS
UNITED STATES PATENT AND TRADEMARK OFFICE
P.O. BOX 1450
ALEXANDRIA, VA 22313-1450
WWW.USPTO.GOV

Paper No. None

FISH & RICHARDSON, P.C.
3300 DAIN RAUSCHER PLAZA
60 SOUTH SIXTH STREET
MINNEAPOLIS MN 55402

**COPY MAILED**

SEP 24 2004

**OFFICE OF PETITIONS**

In re Application of
Claribel Chan, David Cheng Hu, Tim Landvoigt, Charles Nelson, and James Tarver
Application No. 10/624,860
Filed: July 21, 2003
Attorney Docket No. 14066-011001 / 2002P00234
Title: BUSINESS SOLUTION MANAGEMENT (BSM)

DECISION ON PETITION UNDER 37 C.F.R. §1.47(A)

This is in response to the petition under 37 C.F.R. §1.47(a)[1], filed August 30, 2004.

On March 19, 2004, the application was deposited with a declaration, identifying Claribel Chan, David Cheng Hu, Tim Landvoigt, Charles Nelson, and James Tarver as joint inventors. The declaration was executed by each of the joint inventors save Mr. Nelson.

With the instant petition, Petitioner has submitted the petition fee, a statement of facts, the surcharge (which has been charged to Petitioner's Deposit Account, as authorized in the petition), and the last known address of the non-signing joint inventor.

---

1A grantable petition under 37 C.F.R. §1.47(a) requires:

(1) the petition fee of $130;
(2) a surcharge of either $65 or $130 if the petition is not filed at the time of filing the application, as set forth in 37 CFR § 1.16(e);
(3) a statement of the last known address of the non-signing inventors;
(4) either
  a) proof that a copy of the entire application (specification, claims, drawings, and the oath or declaration) was sent or given to the non-signing inventor for review and proof that the non-signing inventor refuses to join in the application or
  b) proof that the non-signing inventor cannot be found or reached after diligent effort;
(5) a declaration which complies with 37 CFR §1.63.

It is noted that a copy of the letter which was sent to the non-signing inventor has not been provided to the Office.

The above-identified application and papers have been reviewed and found in compliance with 37 CFR §1.47(a).

The petition is **GRANTED** and this application is hereby accorded Rule §1.47(a) status.

As provided in Rule 1.47(a), this Office will forward notice of this application's filing to the non-signing inventor at the address given in the petition. Notice of the filing of this application will also be published in the Official Gazette.

After this decision is mailed, the application will be forwarded to Technology Center 3600 for further processing.

Telephone inquiries regarding this decision should be directed to the undersigned at (703) 305-0011. Please note that on approximately September 28, 2004, the Office of Petitions will relocate to the new PTO location in Alexandria. Although the mailing address will remain the same, the general phone number for the Office of Petitions which should be used for status requests will change to 571-272-3282, and the telephone number for the undersigned will change to 571-272-3225.

**Paul Shanoski**
**Senior Attorney**
**Office of Petitions**
**United States Patent and Trademark Office**

UNITED STATES PATENT AND TRADEMARK OFFICE

COMMISSIONER FOR PATENTS
UNITED STATES PATENT AND TRADEMARK OFFICE
P.O. BOX 1450
ALEXANDRIA, VA 22313-1450
WWW.USPTO.GOV

Charles Nelson
615 Terri Court
Gilroy, CA 95020

**COPY MAILED**

SEP 24 2004

**OFFICE OF PETITIONS**

In re Application of
Claribel Chan, David Cheng Hu, Tim Landvoigt,
Charles Nelson, and James Tarver
Application No. 10/624,860
Filed: July 21, 2003
Attorney Docket No. 14066-011001 / 2002P00234
Title: BUSINESS SOLUTION MANAGEMENT (BSM)

DECISION ON PETITION UNDER
37 C.F.R. §1.47(A)

Dear Mr. Nelson:

You are named as a joint inventor in the above-identified United States patent application filed under the provisions of 35 U.S.C. 116 (United States Code) and 37 CFR 1.47(a), Rules of Practice in Patent Cases. Should a patent be granted on the application you will be designated therein as a joint inventor.

As a named inventor you are entitled to inspect any paper in the file wrapper of the application, order copies of all or any part thereof (at a prepaid cost per 37 CFR 1.19) or make your position of record in the application. Alternatively, you may arrange to do any of the preceding through a registered patent attorney or agent presenting written authorization from you. If you care to join the application, the attorney of record below would presumably assist you. Joining in the application would entail the filing of an appropriate oath or declaration by you pursuant to 37 CFR 1.63.

Telephone inquiries regarding this communication should be directed to the undersigned at (703) 305-0011. Requests for information regarding your application should be directed to the File Information Unit at (703) 308-2733. Information regarding how to pay for and order a copy of the application, or a specific paper in the application, should be directed to the Certification Division at (703) 308-9726 or 1-800-972-6382 (outside the Washington D.C. area).

**Paul Shanoski**
**Senior Attorney**
**Office of Petitions**
**United States Patent and Trademark Office**

cc: FISH & RICHARDSON, P.C.
3300 DAIN RAUSCHER PLAZA
60 SOUTH SIXTH STREET
MINNEAPOLIS MN 55402

UNITED STATES PATENT AND TRADEMARK OFFICE

COMMISSIONER FOR PATENTS
UNITED STATES PATENT AND TRADEMARK OFFICE
P.O. BOX 1450
ALEXANDRIA, VA 22313-1450
WWW.USPTO.GOV

Paper No. None

F. CHAU & ASSOCIATES, LLC
130 WOODBURY ROAD
WOODBURY NY 11797

COPY MAILED
JUL 17 2006
OFFICE OF PETITIONS

In re Application of :
Hung-Yang Chang et al. :
Application No. 10/624,861 :
Filed: July 11, 2003 :
Attorney Docket No. :
YOR920030197US1 (8728-627 :
Title: SYSTEMS AND METHODS FOR :
MONITORING AND CONTROLLING :
BUSINESS LEVEL SERVICE LEVEL :
AGREEMENTS :

DECISION ON PETITION
UNDER 37 C.F.R. §1.181(A)

This is a decision on the petition under 37 C.F.R. §1.181(a) to withdraw the holding of abandonment, filed on April 13, 2006.

## BACKGROUND

The above-identified application became abandoned for failure to reply in a timely manner to the non-final Office action, mailed July 28, 2005, which set a shortened statutory period for reply of three (3) months. No response was received, and no extensions of time under the provisions of 37 C.F.R. §1.136(a) were requested. Accordingly, the above-identified application became abandoned on October 29, 2005. A notice of abandonment was mailed on February 14, 2006.

## RELEVANT PORTION OF THE MPEP

MPEP §711.03(c) states, in part:

PETITION TO WITHDRAW HOLDING OF ABANDONMENT BASED ON FAILURE TO RECEIVE OFFICE ACTION

In Delgar v. Schulyer, 172 USPQ 513 (D.D.C. 1971), the court decided that the Office should mail a new Notice of Allowance in view of the evidence presented in support of the contention that the applicant's representative did not receive the original Notice of Allowance. Under the reasoning of Delgar, an allegation that an Office action was never received may be considered in a petition to withdraw the holding of abandonment. If adequately supported, the Office may grant the petition to withdraw the holding of abandonment and remail the Office action. That is, the reasoning of Delgar is applicable regardless of whether an application is held abandoned for failure to timely pay the issue fee (35 U.S.C. 151) or for failure to prosecute (35 U.S.C. 133).

To minimize costs and burdens to practitioners and the Office, the Office has modified the showing required to establish nonreceipt of an Office action. The showing required to establish nonreceipt of an Office communication must include a statement from the practitioner stating that the Office communication was not received by the practitioner and attesting to the fact that a search of the file jacket and docket records indicates that the Office communication was not received. A copy of the docket record where the nonreceived Office communication would have been entered had it been received and docketed must be attached to and referenced in practitioner's statement. For example, if a three month period for reply was set in the nonreceived Office action, a copy of the docket report showing all replies docketed for a date three months from the mail date of the nonreceived Office action must be submitted as documentary proof of nonreceipt of the Office action. See Notice entitled "Withdrawing the Holding of Abandonment When Office Actions Are Not Received," 1156 O.G. 53 (November 16, 1993).

The showing outlined above may not be sufficient if there are circumstances that point to a conclusion that the Office action may have been lost after receipt rather than a conclusion that the Office action was lost in the mail (e.g., if the practitioner has a history of not receiving Office actions).

Evidence of nonreceipt of an Office communication or action (e.g., Notice of Abandonment or an advisory action) other than that action to which reply was required to avoid abandonment would not warrant withdrawal of the holding of abandonment. Abandonment takes place by operation of law for failure to reply to an Office action or timely pay the issue fee, not by operation of the mailing of a Notice of Abandonment. See Lorenz v. Finkl, 333 F.2d 885, 889-90, 142 USPQ 26, 29-30 (CCPA 1964); Krahn v. Commissioner, 15 USPQ2d 1823, 1824 (E.D. Va 1990); In re Application of Fischer, 6 USPQ2d 1573, 1574 (Comm'r Pat. 1988).

Two additional procedures are available for reviving an application that has become abandoned due to a failure to reply to an Office Action: (1) a petition under 37 CFR 1.137(a) based upon unavoidable delay; and (2) a petition under 37 CFR 1.137(b) based on unintentional delay.

See also 1156 O.G. 53 (October 25, 1993), which may be viewed at http://www.uspto.gov/web/offices/com/sol/og/con/files/cons074.htm

## ANALYSIS

With the present petition, Petitioner has alleged that the mailing was not received. Petitioner has failed to state that he

searched both the file jacket and the docket records, and has failed to include a copy of the latter. However it is clear that a change of correspondence address crossed in the mail (the submission was received on July 29, 2005), and the non-final Office action was returned as undeliverable.

## CONCLUSION

Considering the facts and circumstances of the delay at issue, as set forth on petition, it is concluded that petitioner has met his burden of establishing that the mailing was not received.

Accordingly, the petition under 37 C.F.R. §1.181(a) is **GRANTED**. The holding of abandonment is **WITHDRAWN**.

The Technology Center will be notified of this decision. The Technology Center's support staff will re-mail the non-final action of July 28, 2005, and will set a new period for response.

Telephone inquiries regarding this decision should be directed to the undersigned at (571) 272-3225. All other inquiries concerning examination procedures or status of the application should be directed to the Technology Center.

The Change of Correspondence Address has been entered and made of record.

**Paul Shanoski**
**Senior Attorney**
**Office of Petitions**
**United States Patent and Trademark Office**

UNITED STATES PATENT AND TRADEMARK OFFICE

COMMISSIONER FOR PATENTS
UNITED STATES PATENT AND TRADEMARK OFFICE
P.O. BOX 1450
ALEXANDRIA, VA 22313-1450
WWW.USPTO.GOV

Paper No. None

WOODS FULLER SHULTZ & SMITH P.C.
ATTN: JEFFREY A. PROEHL
P.O. BOX 5027
SIOUX FALLS SD 57117

COPY MAILED
JUL 17 2006
OFFICE OF PETITIONS

| | | |
|---|---|---|
| In re Application of | : | |
| Application No. 10/624,861 | : | |
| Filed: July 21, 2003 | : | DECISION ON PETITION |
| Attorney Docket No. 23-0419 | : | UNDER 37 C.F.R. §1.181(A) |
| Title: CONFIGURABLE SURROUND | : | |
| SOUND SYSTEM | : | |

This is a decision on the petition under 37 C.F.R. §1.181(a) to withdraw the holding of abandonment, filed on April 11, 2006.

## BACKGROUND

The above-identified application became abandoned for failure to reply in a timely manner to the non-final Office action, mailed October 11, 2005, which set a shortened statutory period for reply of three (3) months. No response was received, and no extensions of time under the provisions of 37 C.F.R. §1.136(a) were requested. Accordingly, the above-identified application became abandoned on January 12, 2006.

## RELEVANT PORTION OF THE MPEP

MPEP §711.03(c) states, in part:

> PETITION TO WITHDRAW HOLDING OF ABANDONMENT BASED ON FAILURE TO RECEIVE OFFICE ACTION
>
> In Delgar v. Schulyer, 172 USPQ 513 (D.D.C. 1971), the court decided that the Office should mail a new Notice of Allowance in view of the evidence presented in support of the contention that

the applicant's representative did not receive the original Notice of Allowance. Under the reasoning of Delgar, an allegation that an Office action was never received may be considered in a petition to withdraw the holding of abandonment. If adequately supported, the Office may grant the petition to withdraw the holding of abandonment and remail the Office action. That is, the reasoning of Delgar is applicable regardless of whether an application is held abandoned for failure to timely pay the issue fee (35 U.S.C. 151) or for failure to prosecute (35 U.S.C. 133).

To minimize costs and burdens to practitioners and the Office, the Office has modified the showing required to establish nonreceipt of an Office action. The showing required to establish nonreceipt of an Office communication must include a statement from the practitioner stating that the Office communication was not received by the practitioner and attesting to the fact that a search of the file jacket and docket records indicates that the Office communication was not received. A copy of the docket record where the nonreceived Office communication would have been entered had it been received and docketed must be attached to and referenced in practitioner's statement. For example, if a three month period for reply was set in the nonreceived Office action, a copy of the docket report showing all replies docketed for a date three months from the mail date of the nonreceived Office action must be submitted as documentary proof of nonreceipt of the Office action. See Notice entitled "Withdrawing the Holding of Abandonment When Office Actions Are Not Received," 1156 O.G. 53 (November 16, 1993).

The showing outlined above may not be sufficient if there are circumstances that point to a conclusion that the Office action may have been lost after receipt rather than a conclusion that the Office action was lost in the mail (e.g., if the practitioner has a history of not receiving Office actions).

Evidence of nonreceipt of an Office communication or action (e.g., Notice of Abandonment or an advisory action) other than that action to which reply was required to avoid abandonment would not warrant withdrawal of the holding of abandonment. Abandonment takes place by operation of law for failure to reply to an Office action or timely pay the issue fee, not by operation of the mailing of a Notice of Abandonment. See Lorenz v. Finkl, 333 F.2d 885, 889-90, 142 USPQ 26, 29-30 (CCPA 1964); Krahn v. Commissioner, 15 USPQ2d 1823, 1824 (E.D. Va 1990); In re Application of Fischer, 6 USPQ2d 1573, 1574 (Comm'r Pat. 1988).

Two additional procedures are available for reviving an application that has become abandoned due to a failure to reply to an Office Action: (1) a petition under 37 CFR 1.137(a) based upon unavoidable delay; and (2) a petition under 37 CFR 1.137(b) based on unintentional delay.

See also 1156 O.G. 53 (October 25, 1993), which may be viewed at http://www.uspto.gov/web/offices/com/sol/og/con/files/cons074.htm

## ANALYSIS

With the present petition, Petitioner has alleged that the mailing was not received, has set forth that he has searched both the file jacket and the docket records, and has included copies of the latter.

## CONCLUSION

Considering the facts and circumstances of the delay at issue, as set forth on petition, it is concluded that petitioner has met his burden of establishing that the mailing was not received.

Accordingly, the petition under 37 C.F.R. §1.181(a) is **GRANTED**. The holding of abandonment is **WITHDRAWN**.

The Technology Center will be notified of this decision. The Technology Center's support staff will re-mail the non-final action of October 11, 2005, and will set a new period for response.

Telephone inquiries regarding this decision should be directed to the undersigned at (571) 272-3225. All other inquiries concerning examination procedures or status of the application should be directed to the Technology Center.

It is noted in passing that Petitioner's assertion that the Patent Application Location and Monitoring (PALM) software reflects the receipt of a change of correspondence address which does not appear in the electronic file. This notation will be deleted from the record, in due course.

It is further noted that the non-final Office action was returned to the Office as undeliverable. The correspondence address has been changed, as requested, to the customer number which appears on the Power of Attorney which was received on March 1, 2004.

Paul Shanoski

**Paul Shanoski**
**Senior Attorney**
**Office of Petitions**
**United States Patent and Trademark Office**

UNITED STATES PATENT AND TRADEMARK OFFICE

Commissioner for Patents
United States Patent and Trademark Office
P.O. Box 1450
Alexandria, VA 22313-1450
www.uspto.gov

JJGJR.: 07-06

Paper No:__

LYNN A. BUCKNER
P.O. Box 609
CHICKAMAUGA GA 30707

COPY MAILED

JUL 1 0 2006

OFFICE OF PETITIONS

In re Application of :
Buckner :
Application No. 10/624,868 :
Filing Date: 22 July, 2003 :
Attorney Docket No.: (None) :

DECISION

This is a revised decision on the petition filed on 26 May, 2006, requesting withdrawal of the holding of abandonment under 37 C.F.R. §1.181.

For the reasons set forth below, the petition as considered under 37 C.F.R. §1.181 is **GRANTED**.

**NOTE:**

**Monitoring of the status of applications on Private PAIR can inform one's management of application responses and provide an indication when mailings of Office actions should be expected**.

BACKGROUND

The record reflects that:

- Petitioner failed to reply timely and properly to the Restriction Requirement mailed on 23 May, 2005, with reply due absent an extension of time on or before 23 June, 2005;

- the application went abandoned after midnight 23 June 2005;

- the Office mailed the Notice of Abandonment on 31 March, 2006;
- on 26 May, 2006, Petitioner filed the instant petition, an averment of timely filing and what are averred to be true copies of an OIPE date-stamped ("JUN 13 2005") receipt card (see: MPEP §503[1]) evidencing Office receipt of, *inter alia*, a reply in the form of an election (actually styled "preliminary amendment"), and the executed election/amendment submitted at that time.

Out of an abundance of caution, Petitioners always are reminded that the filing of a petition under 37 C.F.R. §1.181 does not toll any periods that may be running any action by the Office and a petition seeking relief under the regulation must be filed within two (2) months of the act complained of (see: 37 C.F.R. §1.181(f)), and those registered to practice *and* all others who make representations before the Office are reminded to inquire into the underlying facts of representations made to the Office and support averments with the appropriate

---

[1] MPEP §503 provides in pertinent part:

**§503 Application Number and Filing Receipt**

* * *

A return postcard should be attached to *each* patent application for which a receipt is desired. It is important that the return postcard itemize all of the components of the application. If the postcard does not itemize each of the components of the application, it will not serve as evidence that any component which was not itemized was received by the United States Patent and Trademark Office (USPTO). It should be recognized that the identification of an application by application number does not necessarily signify that the USPTO has accepted the application as complete (37 C.F.R. §1.53(a)).

* * *

**RETURN POSTCARD**

If a receipt of any item (e.g., paper or fee) filed in the USPTO is desired, it may be obtained by enclosing with the paper a self-addressed postcard specifically identifying the item. The USPTO will stamp the receipt date on the postcard and place it in the outgoing mail. A postcard receipt which itemizes and properly identifies the items which are being filed serves as *prima facie* evidence of receipt in the USPTO of all the items listed thereon on the date stamped thereon by the USPTO.

The identifying data on the postcard should be so complete as to clearly identify the item for which receipt is requested. For example, the postcard should identify the applicant's name, application number (if known), confirmation number (if known), filing date, interference number, title of the invention, etc. The postcard should also identify the type of paper being filed, e.g., new application, affidavit, amendment, notice of appeal, appeal brief, drawings, fees, motions, supplemental oath or declaration, petition, etc., and the number of pages being submitted. If a new application is being filed, all parts of the application being submitted should be separately listed on the postcard, e.g., the number of pages of specification (including written description, claims and abstract), number of claims, number of sheets of drawings, number of pages of oath/declaration, number of pages of cover sheet (provisional application).

The postcard receipt will not serve as *prima facie* evidence of receipt of any item which is not adequately itemized on the postcard. For example, merely listing on the postcard "a complete application" or "patent application" will not serve as a proper receipt for each of the required components of an application (e.g., specification (including claims), drawings (if necessary), oath or declaration and the application filing fee) or missing portions (e.g., pages, sheets of drawings) of an application if one of the components or portion of a component is found to be missing by the USPTO. Each separate component should be specifically and properly itemized on the postcard. Furthermore, merely incorporating by reference in the postcard receipt, the items listed in a transmittal letter will not serve as *prima facie* evidence of receipt of those items.

The person receiving the item(s) in the USPTO will check the listing on the postcard against the item(s) being filed to be sure they are properly identified and that all the items listed on the postcard are presently being submitted to the USPTO. If any of the items listed on the postcard are not being submitted to the USPTO, those items will be crossed off and the post-card initialed by the person receiving the items. Upon return of a postcard receipt from the USPTO, the postcard receipt should be promptly reviewed by the person who filed the items to ensure that every item specifically denoted on the postcard was received by the USPTO. If the postcard receipt has been annotated to indicate that a particular item denoted on the postcard was not received by the USPTO, the postcard receipt will not serve as *prima facie* evidence of receipt of that item in the USPTO. (Emphasis supplied.)

documentation–since all owe to the Office the continuing duty to disclose.[2]

## STATUTES, REGULATIONS AND ANALYSIS

Congress has authorized the Commissioner to "revive an application if the delay is shown to the satisfaction of the Commissioner to have been "unavoidable." 35 U.S.C. §133 (1994).[3]

---

[2] See supplement of 17 June, 1999. The Patent and Trademark Office is relying on petitioner's duty of candor and good faith and accepting a statement made by Petitioner. See Changes to Patent Practice and Procedure, 62 Fed. Reg. at 53160 and 53178, 1203 Off. Gaz. Pat. Office at 88 and 103 (responses to comments 64 and 109)(applicant obligated under 37 C.F.R. §10.18 to inquire into the underlying facts and circumstances when providing statements to the Patent and Trademark Office).

Specifically, the regulations at 37 C.F.R. §10.18 provide:

**§ 10.18 Signature and certificate for correspondence filed in the Patent and Trademark Office.**
(a) For all documents filed in the Office in patent, trademark, and other non-patent matters, except for correspondence that is required to be signed by the applicant or party, each piece of correspondence filed by a practitioner in the Patent and Trademark Office must bear a signature by such practitioner complying with the provisions of §1.4(d), §1.4(e), or § 2.193(c)(1) of this chapter.
(b) By presenting to the Office (whether by signing, filing, submitting, or later advocating) any paper, the party presenting such paper, whether a practitioner or non-practitioner, is certifying that—

(1) All statements made therein of the party's own knowledge are true, all statements made therein on information and belief are believed to be true, and all statements made therein are made with the knowledge that whoever, in any matter within the jurisdiction of the Patent and Trademark Office, knowingly and willfully falsifies, conceals, or covers up by any trick, scheme, or device a material fact, or makes any false, fictitious or fraudulent statements or representations, or makes or uses any false writing or document knowing the same to contain any false, fictitious or fraudulent statement or entry, shall be subject to the penalties set forth under 18 U.S.C. 1001, and that violations of this paragraph may jeopardize the validity of the application or document, or the validity or enforceability of any patent, trademark registration, or certificate resulting therefrom; and

(2) To the best of the party's knowledge, information and belief, formed after an inquiry reasonable under the circumstances, that —

(i) The paper is not being presented for any improper purpose, such as to harass someone or to cause unnecessary delay or needless increase in the cost of prosecution before the Office;

(ii) The claims and other legal contentions therein are warranted by existing law or by a nonfrivolous argument for the extension, modification, or reversal of existing law or the establishment of new law;

(iii) The allegations and other factual contentions have evidentiary support or, if specifically so identified, are likely to have evidentiary support after a reasonable opportunity for further investigation or discovery; and

(iv) The denials of factual contentions are warranted on the evidence, or if specifically so identified, are reasonably based on a lack of information or belief.

(c) Violations of paragraph (b)(1) of this section by a practitioner or non-practitioner may jeopardize the validity of the application or document, or the validity or enforceability of any patent, trademark registration, or certificate resulting therefrom. Violations of any of paragraphs (b)(2)(i) through (iv) of this section are, after notice and reasonable opportunity to respond, subject to such sanctions as deemed appropriate by the Commissioner, or the Commissioner's designee, which may include, but are not limited to, any combination of —

(1) Holding certain facts to have been established;
(2) Returning papers;
(3) Precluding a party from filing a paper, or presenting or contesting an issue;
(4) Imposing a monetary sanction;
(5) Requiring a terminal disclaimer for the period of the delay; or
(6) Terminating the proceedings in the Patent and Trademark Office.

(d) Any practitioner violating the provisions of this section may also be subject to disciplinary action. See § 10.23(c)(15).
[Added 50 FR 5175, Feb. 6, 1985, effective Mar. 8, 1985; para. (a) revised, 58 FR 54494, Oct. 22, 1993, effective Nov. 22, 1993; paras. (a) & (b) revised, paras. (c) & (d) added, 62 FR 53131, Oct. 10, 1997, effective Dec. 1, 1997; para. (a) revised, 69 FR 56481, Sept. 21, 2004, effective Oct. 21, 2004]

[3] 35 U.S.C. §133 provides:
**35 U.S.C. §133 Time for prosecuting application.**
Upon failure of the applicant to prosecute the application within six months after any action therein, of which notice has been given or mailed to the applicant, or within such shorter time, not less than thirty days, as fixed by the Commissioner in such action, the application shall be regarded as abandoned by the parties thereto, unless it be shown to the satisfaction of the Commissioner that such delay was unavoidable.

The regulations at 37 C.F.R. §1.137(a) and (b) set forth the requirements for a petitioner to revive a previously unavoidably or unintentionally, respectively, abandoned application under this congressional grant of authority. The language of 35 U.S.C. §133 and 37 C.F.R. §1.137(a) is clear, unambiguous, and without qualification: the delay in tendering the reply to the outstanding Office action, as well as filing the first petition seeking revival, must have been unavoidable for the reply now to be accepted on petition.[4]

Delays in responding properly raise the question whether delays are unavoidable.[5] Where there is a question whether the delay was unavoidable, Petitioners must meet the burden of establishing that the delay was unavoidable within the meaning of 35 U.S.C. §133 and 37 C.F.R. §1.137(a).[6] And the Petitioner must be diligent in attending to the matter.[7] Failure to do so does not constitute the care required under Pratt, and so cannot satisfy the test for diligence and due care.

(By contrast, unintentional delays are those that do not satisfy the very strict statutory and regulatory requirements of unavoidable delay, and also, by definition, are not intentional.[8]))

Withdraw the Holding of Abandonment

The courts have determined the construct for properly supporting a petition seeking withdrawal of a holding of abandonment.[9]

The commentary at MPEP §711.03(c) provides:

* * *

**B. Petition To Withdraw Holding of Abandonment Based on Evidence That a Reply Was Timely Mailed or Filed**

---

[4] Therefore, by example, an unavoidable delay in the payment of the Filing Fee might occur if a reply is shipped by the US Postal Service, but due to catastrophic accident, the delivery is not made.

[5] See: *Changes to Patent Practice and Procedure*; *Final Rule Notice*, 62 *Fed. Reg.* at 53158-59 (October 10, 1997), 1203 *Off. Gaz. Pat. Office* at 86-87 (October 21, 1997).

[6] See: In re Application of G, 11 USPQ2d 1378, 1380 (Comm'r Pats. 1989).

[7] See: Diligence in Filing Petitions to Revive and Petitions to Withdraw the Holding of Abandonment, 1124 Off. Gaz. Pat. Office 33 (March 19, 1991). It was and is Petitioner's burden to exercise diligence in seeking either to have the holding of abandonment withdrawn or the application revived. See 1124 Off. Gaz. Pat. Office supra.

[8] Therefore, by example, an unintentional delay in the reply might occur if the reply and transmittal form are to be prepared for shipment by the US Postal Service, but other pressing matters distract one's attention and the mail is not timely deposited for shipment.

[9] See: Delgar v. Schulyer, 172 USPQ 513 (D.D.C. 1971).

37 C.F.R. §1.10(c) through §1.10(e) and §1.10(g) set forth procedures for petitioning the Director of the USPTO to accord a filing date to correspondence as of the date of deposit of the correspondence as "Express Mail." A petition to withdraw the holding of abandonment relying upon a timely reply placed in "Express Mail" must include an appropriate petition under 37 C.F.R. §1.10(c), (d), * (e), or (g) (see MPEP § 513). When a paper is shown to have been mailed to the Office using the "Express Mail" procedures, the paper must be entered in PALM with the "Express Mail" date.

Similarly, applicants may establish that a reply was filed with a postcard receipt that properly identifies the reply and provides *prima facie* evidence that the reply was timely filed. See MPEP § 503. For example, if the application has been held abandoned for failure to file a reply to a first Office action, and applicant has a postcard receipt showing that an amendment was timely filed in response to the Office action, then the holding of abandonment should be withdrawn upon the filing of a petition to withdraw the holding of abandonment. When the reply is shown to have been timely filed based on a postcard receipt, the reply must be entered into PALM using the date of receipt of the reply as shown on the post card receipt.

Where a certificate of mailing under 37 C.F.R. §1.8, but not a postcard receipt, is relied upon in a petition to withdraw the holding of abandonment, see 37 C.F.R. §1.8(b) and MPEP § 512. As stated in 37 C.F.R §1.8(b)(3) the statement that attests to the previous timely mailing or transmission of the correspondence must be on a personal knowledge basis, or to the satisfaction of the Director of the USPTO. If the statement attesting to the previous timely mailing is not made by the person who signed the Certificate of Mailing (i.e., there is no personal knowledge basis), then the statement attesting to the previous timely mailing should include evidence that supports the conclusion that the correspondence was actually mailed (e.g., copies of a mailing log establishing that correspondence was mailed for that application). When the correspondence is shown to have been timely filed based on a certificate of mailing, the correspondence is entered into PALM with the actual date of receipt (i.e., the date that the duplicate copy of the papers was filed with the statement under 37 C.F.R. §1.8).

37 C.F.R. §1.8(b) also permits applicant to notify the Office of a previous mailing or transmission of correspondence and submit a statement under 37 C.F.R. 1.8(b)(3) accompanied by a duplicate copy of the correspondence when a reasonable amount of time (e.g., more than one month) has elapsed from the time of mailing or transmitting of the correspondence. Applicant does not have to wait until the application becomes abandoned before notifying the Office of the previous mailing or transmission of the correspondence. Applicant should check

> the private Patent Application Information Retrieval (PAIR) system for the status of the correspondence before notifying the Office. See MPEP § 512.
>
> * * *

And the regulation requires that relief be sought within two (2) months of the act complained of.

As of this writing Petitioner appears to have satisfied the requirements described above.

## CONCLUSION

Because Petitioner has satisfied the burdens set forth in Delgar v. Schulyer, the petition as considered under 37 C.F.R. §1.181 is **granted**, the 31 March, 2006, Notice of Abandonment is **vacated**, and fees are waived.

**The instant application is released to the Examiner in Technology Center 3600 for further processing in due course**.

Telephone inquiries concerning this decision may be directed to the undersigned at (571) 272-3214.

John J. Gillon, Jr.
Senior Attorney
Office of Petitions

UNITED STATES PATENT AND TRADEMARK OFFICE

Commissioner for Patents
United States Patent and Trademark Office
P.O. Box 1450
Alexandria, VA 22313-1450
www.uspto.gov

**LYNN BUCKNER**
**P.O. BOX 609**
**CHICKAMAUGA GA 30707**

COPY MAILED
JAN 09 2009

| | | |
|---|---|---|
| In re Application of | : | |
| Lynn A. Buckner | : | |
| Application No. 10/624,868 | : | DECISION ON PETITION |
| Filed: July 22, 2003 | : | |
| Title: Air Over Water Demolition | : | |

This is a decision on the petition under the unintentional provisions of 37 CFR 1.137(b), filed December 15, 2008, to revive the above-identified application.

The petition is **GRANTED**.

The application became abandoned for failure to reply in a timely manner to the Restriction Requirement mailed October 4, 2007, which set a shortened statutory period for reply of one (1) month or thirty (30) days (whichever is later). No extensions of time under the provisions of 37 CFR 1.136(a) were obtained. Accordingly, the application became abandoned on November 5, 2007. A Notice of Abandonment was mailed April 15, 2008.

The petition satisfies the requirements of 37 CFR 1.137(b) in that petitioner has supplied (1) the reply in the form of a response to the Restriction Requirement, (2) the petition fee of $810.00 and (3) a proper statement of unintentional delay.

Telephone inquiries concerning this decision should be directed to Joan Olszewski at (571)272-7751.

This application is being referred to Technology Center AU 3641 for appropriate action by the Examiner in the normal course of business on the reply received.

/Liana Walsh/
Liana Walsh
Petitions Examiner
Office of Petitions

UNITED STATES PATENT AND TRADEMARK OFFICE

Commissioner for Patents
United States Patent and Trademark Office
P.O. Box 1450
Alexandria, VA 22313-1450
www.uspto.gov

MAIL

MAR 1 4 2005

DIRECTOR OFFICE
TECHNOLOGY CENTER 2100

GALLAGHER & KENNEDY, P. A.
2575 E. CAMELBACK RD. #1100
PHOENIX AZ 85016

In re Application of: Parsons, et al.
Application No. 10/624,883
Filed: July 21, 2003
For: METHOD AND SYSTEM FOR DOMAIN NAME REGISTRATION AND EMAIL BY PROXY

DECISION ON PETITION TO MAKE SPECIAL UNDER M.P.E.P.§708.02(II): INFRINGEMENT

This is a decision on the petition filed November 17, 2003, under 37 C.F.R. 102(d) and M.P.E.P. § 708.02(II): Infringement, to make the above-identified application special. Note, the status inquiry letters of March 8, 2004 and September 29, 2004 are acknowledged.

The Petition is **GRANTED**.

A grantable petition under 37 C.F.R. 1.102(d), and M.P.E.P. §708.02, Section II, must be accompanied by payment of the fee under 37 C.F.R. 1.17(h) and a statement under 37 C.F.R. 1.102 by the applicant or assignee or statements by an attorney/agent registered to practice before the Patent and Trademark Office that:

(a) there is an infringing device or product actually on the market or method in use;
(b) a rigid comparison of the alleged infringing device, product, or method with the claims of the application has been made, and that, in his or her opinion, some of the claims are unquestionably infringed; and
(c) he or she has made or caused to be made a careful and thorough search of the prior art or has a good knowledge of the pertinent prior art. Applicant must provide one copy of each of the references deemed most closely related to the subject matter encompassed by the claims.

Petition to Make Special **GRANTED** since all of the requirements for special status under MPEP § 708.02(II) have been met.

The application is being forwarded to the examiner to be advanced out of turn for examination in accordance with the procedures set forth in M.P.E.P. §708.02 and 37 C.F.R. 1.102.

Brian L. Johnson
Special Program Examiner
Technology Center 2100
Computer Architecture, Software and Information Security
571-272-3595

SDL: 03/11/05

UNITED STATES PATENT AND TRADEMARK OFFICE

Commissioner for Patents
United States Patent and Trademark Office
Washington, D.C. 20231
www.uspto.gov

**MAIL**

MAR 2 4 2005

DIRECTOR OFFICE
TECHNOLOGY CENTER 2100

Gallagher & Kennedy, P.A.
2575 E. Camelback Road # 1100
Phoenix, Arizona 85016

| | | |
|---|---|---|
| In re Application of: Robert R. Parsons et al. | ) | |
| Application No. 10/624,883 | ) | DECISION ON PETITION TO |
| Filed: June 21, 2003 | ) | MAKE SPECIAL UNDER |
| For: METHOD AND SYSTEM FOR | ) | M.P.E.P. §708.02(II): |
| DOMAIN NAME REGISTRATION | ) | INFRINGEMENT |
| AND EMAIL BY PROXY | ) | |

This is a decision on the petition, filed November 17, 2003, requesting to make the above-identified application special under 37 C.F.R. §1.102(d) and M.P.E.P. §708.02(II): Infringement.

A grantable petition under 37 C.F.R. §1.102(d), and M.P.E.P. §708.02, Section II, must be accompanied by payment of the fee under 37 C.F.R.§1.117(h) and a statement under 37 C.F.R. §1.102 by the applicant or assignee or statements by an attorney/agent registered to practice before the Patent and Trademark Office that (A) there is an infringing device or product actually on the market or method in use; (B) a rigid comparison of the alleged infringing device, product, or method with the claims of the application has been made, and that, in his or her opinion, some of the claims are unquestionably infringed: and (C) he or she has made or caused to be made a careful and thorough search of the prior art or has a good knowledge of the prior art. Applicant must provide one copy of each of the references deemed most closely related to the subject matter encompassed by the claims.

Applicants' submission meets all the criteria set out above, accordingly, the Petition is **GRANTED**.

The application file is being forwarded to the Examiner of Record for expedited examination.

Pinchus M. Laufer

Pinchus M. Laufer
Special Programs Examiner
Technology Center 2100
Computer Architecture, Software, and Information Security
(571) 272-3599

UNITED STATES PATENT AND TRADEMARK OFFICE

Commissioner for Patents
United States Patent and Trademark Office
P.O. Box 1450
Alexandria, VA 22313-1450
www.uspto.gov

KRATZ, QUINTOS & HANSON, LLP
1420 K Street, N.W.
Suite 400
WASHINGTON, DC 20005

COPY MAILED

MAR 0 4 2008

OFFICE OF PETITIONS

| | | |
|---|---|---|
| In re Application of | : | |
| Yuji Tawaragi | : | |
| Application No. 10/624,886 | : | ON PETITION |
| Filed: July 23, 2003 | : | |
| Attorney Docket No. 030900 | : | |

This is a decision on the petition under 37 CFR 1.137(b), filed on August 27, 2007, to revive the above-identified application.

The application became abandoned for failure to timely respond to the Notice of Allowance and Fee(s) Due mailed April 26, 2007. A Notice of Abandonment was mailed on August 21, 2007.

The petition satisfies the requirements of 37 CFR 1.137(b), in that, petitioner has supplied (1) the reply in the form of $1,400 for payment of the issue fee and $300 for payment of the publication fee; (2) the petition fee of $1,500; and (3) a proper statement of unintentional delay. Therefore, the petition is **GRANTED**.

The Office acknowledges receipt of $6 for two (2) advance order soft copies submitted on August 27, 2007.

This application file is being referred to the Office of Data Management to be processed into a patent.

Telephone inquiries concerning this decision should be directed to the undersigned at (571) 272-3226.

Andrea Smith
Petitions Examiner
Office of Petitions

UNITED STATES PATENT AND TRADEMARK OFFICE

Commissioner for Patents
United States Patent and Trademark Office
P.O. Box 1450
Alexandria, VA 22313-1450
www.uspto.gov

**Morrison & Foerster, LLP**
**Suite 500**
**3811 Valley Centre Drive**
**San Diego, CA 92130**

COPY MAILED

AUG 09 2007

OFFICE OF PETITIONS

| | | |
|---|---|---|
| In re Application of | : | |
| Eileen Tozer et al. | : | |
| Application No. 10/624,909 | : | DECISION ON PETITION |
| Filed: July 21, 2003 | : | TO WITHDRAW |
| Attorney Docket No. 564462005300 | : | FROM RECORD |

This is a decision on the Request to Withdraw as attorney or agent of record under 37 C.F.R. § 1.36(b), filed March 26, 2007.

The request is **NOT APPROVED** as moot.

A review of the file record indicates that the power of attorney to Gregory P. Einhorn and all attorneys/agents of record has been revoked by the assignee of the patent application on April 9, 2007. Accordingly, the request to withdraw under 37 C.F.R. § 1.36(b) is moot.

Telephone inquires concerning this decision should be directed to Kimberly Inabinet at 571-272- 4618.

Frances Hicks
Petitions Examiner
Office of Petitions

cc: Verenium Corporation
4955 Directors Place
San Diego, CA 92121

UNITED STATES PATENT AND TRADEMARK OFFICE

UNITED STATES DEPARTMENT OF COMMERCE
United States Patent and Trademark Office
Address: COMMISSIONER FOR PATENTS
P.O. Box 1450
Alexandria, Virginia 22313-1450
www.uspto.gov

| APPLICATION NUMBER | FILING OR 371 (c) DATE | FIRST NAMED APPLICANT | ATTY. DOCKET NO./TITLE |
|---|---|---|---|
| 10/624,909 | 07/21/2003 | Eileen Tozer | D1410-2US |

**CONFIRMATION NO. 7087**

*OC000000025263437*

29062
VERENIUM CORPORATION
4955 DIRECTORS PLACE
SAN DIEGO, CA 92121

Date Mailed: 08/09/2007

## NOTICE OF ACCEPTANCE OF POWER OF ATTORNEY

This is in response to the Power of Attorney filed 04/09/2007.

The Power of Attorney in this application is accepted. Correspondence in this application will be mailed to the above address as provided by 37 CFR 1.33.

Kimberly Grabinet
Office of Initial Patent Examination (571) 272-4000, or 1-800-PTO-9199
ATTORNEY/APPLICANT COPY

UNITED STATES PATENT AND TRADEMARK OFFICE

Commissioner for Patents
United States Patent and Trademark Office
P.O. Box 1450
Alexandria, VA 22313-1450
www.uspto.gov

BERKELEY LAW & TECHNOLOGY GROUP, LLP
17933 NW Evergreen Parkway, Suite 250
BEAVERTON OR 97006

COPY MAILED

SEP 0 2 2008

OFFICE OF PETITIONS

| | | |
|---|---|---|
| In re Application of | : | |
| Toong et al. | : | |
| Application No. 10/624918 | : | DECISION ON PETITION |
| Filing or 371(c) date: 07/22/2003 | : | UNDER 37 CFR §§ 1.78(a)(3) and (a)(6) |
| Attorney Docket No. 023.P017 | : | |

This is a decision on the petition under 37 CFR 1.78(a)(3), filed November 5, 2007, to accept an unintentionally delayed claim under 35 U.S.C. §§120 for the benefit of priority to the prior-filed applications set forth in the concurrently filed amendment. The petition is properly treated under 37 CFR §§ 1.78(a)(3) and 1.78(a)(6), to accept an unintentionally delayed claim under 35 U.S.C. §§120 and 119(e). The delay in treating this petition is regretted.

The petition is **DISMISSED.**

A petition for acceptance of a claim for late priority under 37 CFR 1.78(a)(3) is only applicable to those applications filed on or after November 29, 2000. Further, the petition is appropriate only after the expiration of the period specified in 37 CFR 1.78(a)(2)(ii). In addition, the petition under 37 CFR 1.78(a)(3) must be accompanied by:

**(1)** the reference required by 35 U.S.C. § 120 and 37 CFR 1.78(a)(2)(i) of the prior-filed application, unless previously submitted;
**(2)** the surcharge set forth in § 1.17(t); and
**(3)** a statement that the entire delay between the date the claim was due under 37 CFR 1.78(a)(2)(ii) and the date the claim was filed was unintentional. The Director may require additional information where there is a question whether the delay was unintentional.

The petition does not comply with item **(1)**

37 CFR 1.78(a)(2)(i) requires that any nonprovisional application claiming the benefit of one or more prior-filed copending nonprovisional applications must contain or be amended to contain a reference to each such prior-filed application, identifying it by application number (consisting of

the series code and serial number) and indicating the relationship of the applications. The relationship between the applications is whether the subject application is a continuation, divisional, or continuation-in-part of a prior-filed nonprovisional application. An example of a proper benefit claim is: "This application is a continuation of Application No. 10/---, filed---." A benefit claim that merely states: "This application claims the benefit of Application No. 10/---, filed---," does not comply with 37 CFR 1.72(a)(2)(i) since the proper relationship, which includes the type of continuing application, is not stated. Also, the status of each nonprovisional parent application (if it is patented or abandoned) should also be indicated, following the filing date of the parent nonprovisional application. *See* MPEP Section 201.11, Reference to Prior Nonprovisional Applications. The amendment fails to comply with the provisions of 37 CFR 1.78(a)(2)(i) and is therefore unacceptable.
Also, it does not appear that the application 09/454,457 claims the benefit of either provisional application 60/111,111 or 60/111,112. The, MPEP 201.11(III)(C), Benefit claims to multiple prior applications, states:

> Sometimes a pending application is one of a series of applications wherein the pending application is not copending with the first filed application but is copending with an intermediate application entitled to the benefit of the filing date of the first application. If applicant wishes that the pending application have the benefit of the filing date of the first filed application, applicant must, besides making reference to the intermediate application, also make reference to the first application. See Sticker Indus. Supply Corp. v. Blaw-Knox Co., 405 F.2d 90, 160 USPQ 177 (7th Cir. 1968) and Hovlid v. Asari, 305 F. 2d 747, 134 USPQ 162 (9th Cir. 1962). The reference to the prior applications must identify all of the prior applications and indicate the relationship (i.e., continuation, divisional, or continuation-in-part) between each nonprovisional application in order to establish copendency throughout the entire chain of prior applications. <u>Appropriate references must be made in each intermediate application in the chain of prior applications. If an applicant desires, for example, the following benefit claim: "this application is a continuation of Application No. C, filed ---, which is a continuation of Application No. B, filed ---, which claims the benefit of provisional Application No. A, filed ---," then Application No. C must have a reference to Application No. B and provisional Application No. A, and Application No. B must have a reference to provisional Application No. A.</u>

Before the petition under 37 CFR §§ 1.78(a)(3) and 1.78(a)(6) can be granted, a renewed petition Application Data Sheet or a substitute amendment (complying with 35 U.S.C. §§120 and 119(e); 37 CFR 1.121 and 37 CFR 1.76(b)(2)(5)), which states the relationship of the prior-filed application(s) to this application, are required.

Further correspondence with respect to this matter should be addressed as follows:

By mail: Mail Stop PETITIONS
Director for Patents
Post Office Box 1450
Alexandria, VA 22313-1450

By hand: Customer Service Window
Mail Stop Petitions
Randolph Building
401 Dulany Street
Alexandria, VA 22314

By fax: (571) 273-8300
ATTN: Office of Petitions

Any questions concerning this matter may be directed to Derek Woods at (571) 272-3232.

Anthony Knight
Supervisor
Office of Petitions

UNITED STATES PATENT AND TRADEMARK OFFICE

Commissioner for Patents
United States Patent and Trademark Office
P.O. Box 1450
Alexandria, VA 22313-1450
www.uspto.gov

BERKELEY LAW & TECHNOLOGY GROUP, LLP
17933 NW Evergreen Parkway, Suite 250
BEAVERTON OR 97006

COPY MAILED
DEC 0 8 2008

| | | |
|---|---|---|
| In re Application of | : | |
| Toong et al. | : | |
| Application No. 10/624918 | : | DECISION ON PETITION |
| Filing or 371(c) date: 07/22/2003 | : | UNDER 37 CFR §§ 1.78(a)(3) and (a)(6) |
| Attorney Docket No. 023.P017 | : | |

This is a decision on the renewed petition under 37 CFR 1.78(a)(3), filed October 14, 2008, to accept an unintentionally delayed claim under 35 U.S.C. §§120 and 119(e) for the benefit of priority to the prior-filed applications set forth in the concurrently filed amendment. The petition is properly treated under 37 CFR §§ 1.78(a)(3) and 1.78(a)(6), to accept an unintentionally delayed claim under 35 U.S.C. §§120 and 119(e).

The petitions is **GRANTED.**

A petition for acceptance of a claim for late priority under 37 CFR §§ 1.78(a)(3) and 1.78(a)(6) is only applicable to those applications filed on or after November 29, 2000. Further, the petition is appropriate only after the expiration of the period specified in 37 CFR §§ 1.78(a)(2)(ii) and 1.78(a)(5)(ii). In addition, the petition under 37 CFR §§ 1.78(a)(3) and 1.78(a)(6) must be accompanied by:

(1) the reference required by 35 U.S.C. §§ 120 and 119(e) and 37 CFR §§ 1.78(a)(2)(i) and 1.78(a)(5)(i) of the prior-filed application, unless previously submitted;
(2) the surcharge set forth in § 1.17(t); and
(3) a statement that the entire delay between the date the claim was due under 37 CFR §§ 1.78(a)(2)(ii) and 1.78(a)(5)(ii) and the date the claim was filed was unintentional. The Director may require additional where there is a question whether the delay was unintentional.

Additionally, the instant nonprovisional application must be pending at the time of filing of the reference to the prior-filed provisional application(s) as required by 37 CFR 1.78(a)(5)(ii). Further, the nonprovisional application(s) claiming the benefit of the prior-filed provisional application(s) must have been filed within twelve months of the filing date of the prior-filed provisional application(s).

All of the above requirements having been satisfied, the late claim for benefit of priority to the prior-filed applications under 35 U.S.C. §§ 120 and 119(e) is accepted as being unintentionally delayed.

**The granting of the petition to accept the delayed benefit claim to the prior-filed applications under 37 CFR §§ 1.78(a)(3) and 1.78(a)(6) should not be construed as meaning that this application is entitled to the benefit of the filing date of the prior-filed applications. In order for this application to be entitled to the benefit of the prior-filed applications, all other requirements under 35 U.S.C. §§120 and 1.78(a)(1) and (a)(2) and under 35 U.S.C. §119(e) and 37 CFR 1.78(a)(4) and (a)(5) must be met. Similarly, the fact that the corrected Filing Receipt accompanying this decision on petition includes the prior-filed applications should not be construed as meaning that applicant is entitled to the claim for benefit of priority to the prior-filed applications noted thereon. Accordingly, the examiner will, in due course, consider this benefit claim and determine whether the application is entitled to the benefit of the earlier filing date.**

A corrected Filing Receipt, which includes the priority claim to the prior-filed applications, accompanies this decision on petition.

Any questions concerning this matter may be directed to Derek Woods at (571) 272-3232. All other inquiries concerning either the examination procedures or status of the application should be directed to the Technology Center.

This application is being referred to Technology Center Art Unit 2167 for consideration by the examiner of the claim for benefit of priority under 35 U.S.C. § §120 and 119(e) to the prior-filed nonprovisional and provisional applications.

Anthony Knight
Supervisor
Office of Petitions

**ATTACHMENT** : Corrected Filing Receipt

UNITED STATES PATENT AND TRADEMARK OFFICE

UNITED STATES DEPARTMENT OF COMMERCE
United States Patent and Trademark Office
Address: COMMISSIONER FOR PATENTS
P.O. Box 1450
Alexandria, Virginia 22313-1450
www.uspto.gov

| APPLICATION NUMBER | FILING or 371(c) DATE | GRP ART UNIT | FIL FEE REC'D | ATTY.DOCKET.NO | TOT CLAIMS | IND CLAIMS |
|---|---|---|---|---|---|---|
| 10/624,918 | 07/22/2003 | 2167 | 822 | 023.P017 | 28 | 3 |

**CONFIRMATION NO. 7115**

**CORRECTED FILING RECEIPT**

43831
BERKELEY LAW & TECHNOLOGY GROUP, LLP
17933 NW Evergreen Parkway, Suite 250
BEAVERTON, OR 97006

*OC000000033291542*

Date Mailed: 11/24/2008

Receipt is acknowledged of this non-provisional patent application. The application will be taken up for examination in due course. Applicant will be notified as to the results of the examination. Any correspondence concerning the application must include the following identification information: the U.S. APPLICATION NUMBER, FILING DATE, NAME OF APPLICANT, and TITLE OF INVENTION. Fees transmitted by check or draft are subject to collection. Please verify the accuracy of the data presented on this receipt. **If an error is noted on this Filing Receipt, please submit a written request for a Filing Receipt Correction. Please provide a copy of this Filing Receipt with the changes noted thereon. If you received a "Notice to File Missing Parts" for this application, please submit any corrections to this Filing Receipt with your reply to the Notice. When the USPTO processes the reply to the Notice, the USPTO will generate another Filing Receipt incorporating the requested corrections**

**Applicant(s)**

Hoo-min Toong, Cambridge, MA;
Joseph G. Hadzima JR., Wellesley, MA;

**Power of Attorney:** The patent practitioners associated with Customer Number 00043831

**Domestic Priority data as claimed by applicant**

This appln claims benefit of 60/397,542 07/22/2002
and is a CIP of 09/645,626 08/24/2000 PAT 6,604,114
which is a CON of 09/454,457 12/03/1999 ABN
which claims benefit of 60/111,111 12/04/1998
and claims benefit of 60/111,112 12/04/1998

**Foreign Applications**

**If Required, Foreign Filing License Granted:** 12/01/2003

The country code and number of your priority application, to be used for filing abroad under the Paris Convention, is **US 10/624,918**

**Projected Publication Date:** Not Applicable

**Non-Publication Request:** No

**Early Publication Request:** No
**** SMALL ENTITY ****

**Title**

Systems and methods of searching databases

**Preliminary Class**

707

## PROTECTING YOUR INVENTION OUTSIDE THE UNITED STATES

Since the rights granted by a U.S. patent extend only throughout the territory of the United States and have no effect in a foreign country, an inventor who wishes patent protection in another country must apply for a patent in a specific country or in regional patent offices. Applicants may wish to consider the filing of an international application under the Patent Cooperation Treaty (PCT). An international (PCT) application generally has the same effect as a regular national patent application in each PCT-member country. The PCT process **simplifies** the filing of patent applications on the same invention in member countries, but **does not result** in a grant of "an international patent" and does not eliminate the need of applicants to file additional documents and fees in countries where patent protection is desired.

Almost every country has its own patent law, and a person desiring a patent in a particular country must make an application for patent in that country in accordance with its particular laws. Since the laws of many countries differ in various respects from the patent law of the United States, applicants are advised to seek guidance from specific foreign countries to ensure that patent rights are not lost prematurely.

Applicants also are advised that in the case of inventions made in the United States, the Director of the USPTO must issue a license before applicants can apply for a patent in a foreign country. The filing of a U.S. patent application serves as a request for a foreign filing license. The application's filing receipt contains further information and guidance as to the status of applicant's license for foreign filing.

Applicants may wish to consult the USPTO booklet, "General Information Concerning Patents" (specifically, the section entitled "Treaties and Foreign Patents") for more information on timeframes and deadlines for filing foreign patent applications. The guide is available either by contacting the USPTO Contact Center at 800-786-9199, or it can be viewed on the USPTO website at http://www.uspto.gov/web/offices/pac/doc/general/index.html.

For information on preventing theft of your intellectual property (patents, trademarks and copyrights), you may wish to consult the U.S. Government website, http://www.stopfakes.gov. Part of a Department of Commerce initiative, this website includes self-help "toolkits" giving innovators guidance on how to protect intellectual property in specific countries such as China, Korea and Mexico. For questions regarding patent enforcement issues, applicants may call the U.S. Government hotline at 1-866-999-HALT (1-866-999-4158).

## LICENSE FOR FOREIGN FILING UNDER

## Title 35, United States Code, Section 184

## Title 37, Code of Federal Regulations, 5.11 & 5.15

**GRANTED**

The applicant has been granted a license under 35 U.S.C. 184, if the phrase "IF REQUIRED, FOREIGN FILING LICENSE GRANTED" followed by a date appears on this form. Such licenses are issued in all applications where the conditions for issuance of a license have been met, regardless of whether or not a license may be required as

set forth in 37 CFR 5.15. The scope and limitations of this license are set forth in 37 CFR 5.15(a) unless an earlier license has been issued under 37 CFR 5.15(b). The license is subject to revocation upon written notification. The date indicated is the effective date of the license, unless an earlier license of similar scope has been granted under 37 CFR 5.13 or 5.14.

This license is to be retained by the licensee and may be used at any time on or after the effective date thereof unless it is revoked. This license is automatically transferred to any related applications(s) filed under 37 CFR 1.53(d). This license is not retroactive.

The grant of a license does not in any way lessen the responsibility of a licensee for the security of the subject matter as imposed by any Government contract or the provisions of existing laws relating to espionage and the national security or the export of technical data. Licensees should apprise themselves of current regulations especially with respect to certain countries, of other agencies, particularly the Office of Defense Trade Controls, Department of State (with respect to Arms, Munitions and Implements of War (22 CFR 121-128)); the Bureau of Industry and Security, Department of Commerce (15 CFR parts 730-774); the Office of Foreign AssetsControl, Department of Treasury (31 CFR Parts 500+) and the Department of Energy.

**NOT GRANTED**

No license under 35 U.S.C. 184 has been granted at this time, if the phrase "IF REQUIRED, FOREIGN FILING LICENSE GRANTED" DOES NOT appear on this form. Applicant may still petition for a license under 37 CFR 5.12, if a license is desired before the expiration of 6 months from the filing date of the application. If 6 months has lapsed from the filing date of this application and the licensee has not received any indication of a secrecy order under 35 U.S.C. 181, the licensee may foreign file the application pursuant to 37 CFR 5.15(b).

UNITED STATES PATENT AND TRADEMARK OFFICE

Commissioner for Patents
United States Patent and Trademark Office
P.O. Box 1450
Alexandria, VA 22313-1450
www.uspto.gov

BERKELEY LAW & TECHNOLOGY GROUP, LLP
17933 NW Evergreen Parkway, Suite 250
BEAVERTON OR 97006

COPY MAILED
DEC 15 2008

| | | |
|---|---|---|
| In re Application of | : | |
| Toong et al. | : | |
| Application No. 10/624918 | : | |
| Filing or 371(c) Date: 07/22/2003 | : | ON PETITION |
| Attorney Docket Number: 023.P017 | : | |

This is a decision on the petition under 37 CFR 1.137(b), filed October 14, 2008, to revive the above-identified application.

This Petition is hereby **dismissed as moot**.

**Background**

Petitioner files the present petition to revive application serial number 09/454,457 in order to amend the application to add a priority claim. Petitioner is advised that revival of application 09/454,457 is not necessary in order to amend the application to add the priority claim. The amendment adding the priority claim has been entered in application 09/454,457.

In view of the above, the petition is dismissed as moot.

The petition fee has been refunded to petitioner's deposit account.

Telephone inquiries concerning this matter should be directed to the undersigned at (571) 272-3232.

/Derek L. Woods/
Derek L. Woods
Attorney
Office of Petitions

UNITED STATES PATENT AND TRADEMARK OFFICE

UNITED STATES DEPARTMENT OF COMMERCE
United States Patent and Trademark Office
Address: COMMISSIONER FOR PATENTS
P.O. Box 1450
Alexandria, Virginia 22313-1450
www.uspto.gov

SHEPPARD, MULLIN, RICHTER & HAMPTON LLP
333 SOUTH HOPE STREET
48TH FLOOR
LOS ANGELES, CA 90071-1448

Mail Date: 04/21/2010

| | | |
|---|---|---|
| **Applicant** | : Russell E. Evans | : DECISION ON REQUEST FOR |
| **Patent Number** | : 7582235 | : RECALCULATION of PATENT |
| **Issue Date** | : 09/01/2009 | : TERM ADJUSTMENT IN VIEW |
| **Appliction No** | : 10/624,925 | : OF WYETH AND NOTICE OF INTENT TO |
| **Filed** | : 07/21/2003 | : ISSUE CERTIFICATE OF CORRECTION |
| | | : |

The Request for Recalculation is **GRANTED** to the extent indicated.

The patent term adjustment has been determined to be **576** days. The USPTO will *sua sponte* issue a certificate of correction reflecting the amount of PTA days determined by the recalculation.

Prior to the issuance of the certificate of correction, the USPTO will afford patentee an opportunity to be heard and request reconsideration. Accordingly, patentee has **one month or thirty (30) days**, whichever is longer, to file a request for reconsideration of this patent term adjustment calculation. See 35 U.S.C. 154(b)(3)(B)(ii) and 37 CFR 1.322(a)(4). No extensions of time will be granted under 37 CFR 1.136.

Patentee should use document code PET.OP if electronically filing a request for reconsideration of this patent term adjustment calculation. The patentee must also include the information required by 37 CFR 1.705(b)(2) and the fee required by 37 CFR 1.18(e). If patentee does not file a timely request for reconsideration of this patent term adjustment calculation including the information required by 37 CFR 1.705(b)(2) and the fee required by 37 CFR 1.18(e), the USPTO will issue a certificate of correction reflecting the PTA determination noted above.

Patentee should be aware that in order to preserve the right to review in the United States District Court for the District of Columbia of the USPTO patent term adjustment determination, patentee must ensure that he or she also take the steps required under 35 U.S.C. 154(b)(4)(A) in a timely manner. Nothing in the request for recalculation should be construed as providing an alternative time frame for commencing a civil action under 35 U.S.C. 154(b)(4)(A).

Any questions concerning this decision should be directed to the Office of Patent Legal Administration at 571-272-7702.

UNITED STATES PATENT AND TRADEMARK OFFICE

COMMISSIONER FOR PATENTS
UNITED STATES PATENT AND TRADEMARK OFFICE
P.O. BOX 1450
ALEXANDRIA, VA 22313-1450
www.uspto.gov

Paper No.

Jasper W. Dockrey
BRINKS HOFER GILSON & LIONE
P.O. BOX 10395
CHICAGO IL 60610

**COPY MAILED**

SEP 20 2007

**OFFICE OF PETITIONS**

| | | |
|---|---|---|
| In re Patent No. 7,164,560 | : | |
| Saito et al. | : | DECISION ON REQUEST |
| Issue Date: January 16, 2007 | : | FOR |
| Application No. 10/624,931 | : | RECONSIDERATION OF |
| Filed: July 22, 2003 | : | PATENT TERM ADJUSTMENT |
| Attorney Docket No. 9281/4596 | : | |

This is a decision on the "REQUEST FOR RECONSIDERATION OF PATENT TERM ADJUSTMENT," filed February 6, 2007. Patentees request that the patent term adjustment indicated on the face of the Letters Patent be corrected from five hundred forty-five (545) days to seven hundred twenty-three (723) days.

The request for reconsideration of the patent term adjustment under § 1.705(d) is **DISMISSED**.

Patentees are given **TWO (2) MONTHS** from the mail date of this decision to respond. No extensions of time will be granted under § 1.136.

On January 16, 2007, the above-identified application matured into U.S. Patent No. 7,164,560, with a revised Patent Term Adjustment of 545 days. The instant request for reconsideration filed February 6, 2007 was timely filed within 2 months of the date the patent issued. See § 1.705(d). Patentees assert that an additional period of adjustment of 178 days should have been entered for the Office taking in excess of three years to issue the patent.

With respect to §1.703(b), it is noted that the patent issued three years and 178 days after its filing date. However, any days of delay for Office issuance of the patent more than 3 years after the filing date of the application, which overlap, with the days of patent term adjustment accorded prior to the issuance of the patent will not result in any additional patent term adjustment. Further, in considering the overlap, the entire period during which the application was pending (except for periods excluded under 35 U.S.C. 154(b)(1)(B)(i)-(iii), and not just the period beginning three years after the actual filing date of the application, is the period of delay under 35 U.S.C. 154(b)(1)(B) in determining whether periods of delay overlap under 35 U.S.C. 154(b)(2)(A). See 35 U.S.C. 154(b)(1)(B); 35 U.S.C. 154(b)(2)(A); and 37 CFR 1.703(f). In this instance, it was properly concluded that the period of 178 days overlapped. Thus, the application accrued no additional days pursuant to 37 CFR 1.703(b).

In view thereof, the patent term adjustment of 545 days indicated in the patent is correct.

The Office acknowledges submission of the $200.00 fee set forth in 37 CFR 1.18(e). No additional fees are required.

Telephone inquiries specific to this matter should be directed to the undersigned at (571) 272-3219.

Nancy Johnson
Senior Petitions Attorney
Office of Petitions

UNITED STATES PATENT AND TRADEMARK OFFICE

Commissioner for Patents
United States Patent and Trademark Office
P.O. Box 1450
Alexandria, VA 22313-1450
www.uspto.gov

**JENELL LAWSON**
**INTELLECTUAL PROPERTY**
**CURAGEN CORPORATION**
**555 LONG WHARF DRIVE**
**NEW HAVEN, CT 06551**

**COPY MAILED**

FEB 2 2 2005

**OFFICE OF PETITIONS**

In re Application of :
Taupier et al. :
Application No. 10/624,932 :
Filed: July 21, 2003 :
Attorney Docket No. Cura374 CON :

ON PETITION

This is a decision on the petition under 37 C.F.R. § 1.137(b), filed February 3, 2005, to revive the above-identified application.

The petition is **GRANTED.**

This application became abandoned for failure to timely reply to the non-final Office action mailed July 19, 2004. No extensions of time under the provisions of 37 CFR 1.136(a) were timely obtained. Accordingly, this application became abandoned on October 20, 2004.

Petitioner has met the requirements to revive the above-identified application pursuant to 37 CFR 1.137(b).

An extension of time under 37 CFR 1.136 must be filed prior to the expiration of the maximum extendable period for reply. See In re Application of S., 8 USPQ2d 1630, 1631 (Comm'r Pats. 1988). Accordingly, since the $510.00 extension of time fee submitted with the petition on February 3, 2005 was subsequent to the maximum extendable period for reply, this fee is unnecessary and will be credited to petitioner's deposit account as authorized.

This matter is being referred to Technology Center 1600 for further examination on the merits.

Telephone inquiries regarding this decision should be directed to the undersigned at (571) 272-3282.

Liana Chase
Petitions Examiner
Office of Petitions
Office of the Deputy Commissioner
for Patent Examination Policy

UNITED STATES PATENT AND TRADEMARK OFFICE

Commissioner for Patents
United States Patent and Trademark Office
P.O. Box 1450
Alexandria, VA 22313-1450
www.uspto.gov

MAILED

JAN 1 8 2005

Technology Center 2100

GERALD C. CHAN
BINGHAM, MCCUTCHEN LLP
THREE EMBARCADERO CENTER
SUITE 1800
SAN FRANCISCO, CALIFORNIA 94111-4067

In re Application of: Xie
Application No. 10/624,941
Filed: July 21, 2003
For: MANAGING NETWORK TRAFFIC FLOW

**DECISION ON PETITION TO MAKE SPECIAL UNDER 37 C.F.R § 1.102(d) AND M.P.E.P. §708.02 (XI)**

This is a decision on the petition to make special filed August 06, 2004 under 37 C.F.R. §1.102(d) and §708.02 (XI), Inventions for Countering Terrorism.

The petition is **DISMISSED**.

M.P.E.P. §708.02 (XI), which sets out the prerequisites for a grantable petition for Inventions For Countering Terrorism under 37 C.F.R. § 1.102(d), states in relevant part:

> International terrorism as defined in 18 U.S.C. 2331 includes "activities that - (A) involve violent acts or acts dangerous to human life that are a violation of the criminal laws of the United States or of any State, or that would be a criminal violation if committed within the jurisdiction of the United States or of any State; [and] (B) appear to be intended - (i) to intimidate or coerce a civilian population; (ii) to influence the policy of a government by intimidation or coercion; or (iii) to affect the conduct of a government by assassination or kidnapping..." The types of technology for countering terrorism could include, but are not limited to, systems for detecting/identifying explosives, aircraft sensors/security systems, and vehicular barricades/disabling systems.
>
> Applicants who desire that an application relating to inventions for countering terrorism be made special should file a petition **with the petition fee under 37 CFR 1.17(h)** requesting the Patent and Trademark Office to make the application special. **The petition for special status should be accompanied by a statement explaining how the invention contributes to countering terrorism.**

Petitioner's submission fails to meet the criteria set out with respect to countering terrorism in M.P.E.P. §708.02(XI). The claimed invention is generally directed to managing network traffic flow including

flagging traffic, detecting traffic content which matches a prescribed protocol, and transmitting traffic content when it is determined that certain content is absent in the network traffic.

Petitioner does not establish a sufficient nexus between the disclosed and claimed invention and preventing "violent acts or acts dangerous to human life that are a violation of the criminal laws of the United States or of any State" or activities "that would be a criminal violation if committed within the jurisdiction of the United States or of any State", or preventing acts that appear to be intended to intimidate or coerce a civilian population; influence the policy of a government by intimidation or coercion; or affect the conduct of a government by assassination or kidnapping.

As a result, no advancement in the technology of countering terrorism has been persuasively shown in the petition.

***In addition***, the Fee Transmittal form with the appropriate fee set forth in 37 C.F.R. §1.17(h), referenced on page one of the petition, does not appear to be included with the submission, and thus has not been matched with the file.

Accordingly, the petition is **DISMISSED**. The application file is being returned to the examiner's docket to await further treatment on the merits in the normal order of examination.

Any request for reconsideration must be filed within TWO MONTHS of the mailing date of this decision. Applicants can file a request for reconsideration with specific recitations that directly prevent acts of terrorism.

It is suggested that Applicant review M.P.E.P. §708.02 regarding other grounds available for filing a petition to make special. In particular, note M.P.E.P. §708.02(VIII): Accelerated Examination, which does not place limitations on the subject matter of the application.

Brian L. Johnson 1/12/05

Brian L. Johnson
Special Programs Examiner
Technology Center 2100
Computer Architecture, Software, and Information Security
(571) 272-3595

HMJ: 01/11/05

UNITED STATES PATENT AND TRADEMARK OFFICE

COMMISSIONER FOR PATENTS
UNITED STATES PATENT AND TRADEMARK OFFICE
P.O. BOX 1450
ALEXANDRIA, VA 22313-1450
www.uspto.go

Paper No.

Gina N. Shishima
Fulbright & Jaworski L.L.P.
Suite 2400
600 Congress Ave.
Austin, TX 78701

COPY MAILED

MAR 1 9 2004

OFFICE OF PETITIONS

In re Application of :
Yeh et al. :
Application No. 10/624,945 :
Filed: July 22, 2003 :
Attorney Docket Number: :
UTSH:245USC1 :

Decision on Petition

This is a decision in response the Petition Under 37 CFR 1.53(e) to Accord Filing Date and Response to Notice to File Missing Parts of Nonprovisional Application Filed Under 37 CFR 1.53(b), filed January 26, 2003 (Certificate of Mailing dated January 21, 2004).

The petition is **granted**.

The application was filed on July 22, 2003. However, on December 30, 2003, the Office of Initial Patent Examination mailed a Notice to File Missing Parts of Nonprovisional Application (hereinafter ("Notice"), noting, *inter alia*, that a filing date had been accorded the application; however, the application did not contain a statement that the content of the sequence listing information recorded in computer readable form is identical to the written (on paper or compact disc) sequence listing and, where applicable, includes no new matter as required by 37 CFR 1.821(e), 1.821(f), 1.821(g), 1.825(b), or 1.825(d).

The Notice further advised Applicant that drawing Figure 5C described in the specification appeared to have been omitted from the application.

In response, Petitioner files the instant petition wherein Petitioner avers that a filing date has not been accorded the application for a failure to supply Figure 5C. Applicant further avers that drawing Figure 5C, and a statement that the content of the sequence listing information recorded in computer readable form is identical to the written (on paper or compact

disc) sequence listing were originally filed with the application on July 22, 2003, and was received by this Office as evidenced by the return-receipt postcard. In support, Applicant provides a copy of a return receipt postcard acknowledging receipt of, *inter alia*, 10 sheets of drawings on July 22, 2003, and a Request to Transfer Sequence Listing on July 22, 2003.

A review of the return receipt postcard reveals that Petitioner is correct. The postcard acknowledges receipt of, *inter alia*, 10 sheets of drawings on July 22, 2003, and a Request to Transfer Sequence Listing on July 22, 2003. Petitioner has also re-submitted 10 sheets of drawings and the Request to Transfer Sequence Listing with the instant petition. A review of the Request to Transfer Sequence Listing reveals that it contains a statement that the content of the sequence listing information recorded in computer readable form is identical to the sequence information contained in the previously filed computer readable sequence listing in the parent application.

Evidence of receipt of any correspondence filed in the Patent and Trademark Office can be obtained by submitting a self-addressed postcard properly itemizing and identifying the paper or papers being filed. Upon receipt of the correspondence, the Patent and Trademark Office will check the listing on the post card against the papers submitted, making sure that all items listed are present and will then stamp the postcard with an Official date stamp and place the postcard in the outgoing mail. "A postcard receipt which itemizes and properly identifies the papers which are being filed serves as *prima facie* evidence of receipt in the PTO of all items listed thereon by the PTO." MPEP § 503.

The copies of the drawing Figure 5C and Request to Transfer Sequence Listing, supplied on January 26, 2004, will be used for examination purposes.

The petition fee has been refunded to deposit account 50-1212 as authorized in the instant petition.

The application will be returned to the Office of Initial Patent Examination for further processing as a nonprovisional application <u>with a filing date of July 22, 2003, and an indication that 10 sheets of drawings and a statement that the</u>

content of the sequence listing information recorded in computer readable form is identical to the written (on paper or compact disc) sequence listing were present on filing, using drawing Figure 5C and Request to Transfer Sequence Listing filed on January 26, 2004.

Telephone inquiries concerning this matter should be directed to the undersigned at (703) 305-0014.

Derek L. Woods
Petitions Attorney
Office of Petitions

UNITED STATES PATENT AND TRADEMARK OFFICE

Commissioner for Patents
United States Patent and Trademark Office
P.O. Box 1450
Alexandria, VA 22313-1450
www.uspto.gov

Fulbright & Jaworski LLP
600 Congress Avenue
Suite 2400
Austin TX 78701

**MAILED**

FEB 25 2010

OFFICE OF PETITIONS

In re Patent No. 7,588,927 :
Issue Date: September 15, 2009 :
Application No. 10/624, 945 : ON PETITION
Filed: July 22, 2003 :
Attorney Docket No. **UTSH:245USC1/10308540** :

This is a decision on the petition filed November 10, 2009, which is being treated as a request under 37 CFR 3.81(b)[1] to correct the name of the assignee on the front page of the above-identified patent by way of a Certificate of Correction.

The request is **GRANTED**.

Telephone inquiries concerning this decision may be directed to the JoAnne Burke at (571) 272-4584. Inquiries regarding the issuance of a certificate of correction should be directed to the Certificate of Correction Branch at (571) 272-4200.

The Certificates of Correction Branch will be notified of this decision granting the petition under 37 CFR 3.81(b) and directing issuance of the requested Certificate of Correction.

JoAnne Burke
Petitions Examiner
Office of Petitions

[1] *See* MPEP 1309, subsection II; and Official Gazette of June 22, 2004.

UNITED STATES PATENT AND TRADEMARK OFFICE

UNITED STATES DEPARTMENT OF COMMERCE
United States Patent and Trademark Office
Address: COMMISSIONER FOR PATENTS
P.O. Box 1450
Alexandria, Virginia 22313-1450
www.uspto.gov

FULBRIGHT & JAWORSKI L.L.P.
600 CONGRESS AVE.
SUITE 2400
AUSTIN, TX 78701

Mail Date: 04/21/2010

| | | |
|---|---|---|
| **Applicant** | : Edward T.H. Yeh | : DECISION ON REQUEST FOR |
| **Patent Number** | : 7588927 | : RECALCULATION of PATENT |
| **Issue Date** | : 09/15/2009 | : TERM ADJUSTMENT IN VIEW |
| **Appliction No** | : 10/624,945 | : OF WYETH AND NOTICE OF INTENT TO |
| **Filed** | : 07/22/2003 | : ISSUE CERTIFICATE OF CORRECTION |
| | | : |

The Request for Recalculation is **GRANTED** to the extent indicated.

The patent term adjustment has been determined to be **570** days. The USPTO will *sua sponte* issue a certificate of correction reflecting the amount of PTA days determined by the recalculation.

Prior to the issuance of the certificate of correction, the USPTO will afford patentee an opportunity to be heard and request reconsideration. Accordingly, patentee has **one month or thirty (30) days**, whichever is longer, to file a request for reconsideration of this patent term adjustment calculation. See 35 U.S.C. 154(b)(3)(B)(ii) and 37 CFR 1.322(a)(4). No extensions of time will be granted under 37 CFR 1.136.

Patentee should use document code PET.OP if electronically filing a request for reconsideration of this patent term adjustment calculation. The patentee must also include the information required by 37 CFR 1.705(b)(2) and the fee required by 37 CFR 1.18(e). If patentee does not file a timely request for reconsideration of this patent term adjustment calculation including the information required by 37 CFR 1.705(b)(2) and the fee required by 37 CFR 1.18(e), the USPTO will issue a certificate of correction reflecting the PTA determination noted above.

Patentee should be aware that in order to preserve the right to review in the United States District Court for the District of Columbia of the USPTO patent term adjustment determination, patentee must ensure that he or she also take the steps required under 35 U.S.C. 154(b)(4)(A) in a timely manner. Nothing in the request for recalculation should be construed as providing an alternative time frame for commencing a civil action under 35 U.S.C. 154(b)(4)(A).

Any questions concerning this decision should be directed to the Office of Patent Legal Administration at 571-272-7702.

UNITED STATES PATENT AND TRADEMARK OFFICE

UNITED STATES DEPARTMENT OF COMMERCE
United States Patent and Trademark Office
Address: COMMISSIONER FOR PATENTS
P.O. Box 1450
Alexandria, Virginia 22313-1450
www.uspto.gov

FULBRIGHT & JAWORSKI L.L.P.
600 CONGRESS AVE.
SUITE 2400
AUSTIN, TX 78701

Mail Date: 05/18/2010

**Applicant** : Edward T.H. Yeh
**Patent Number** : 7588927
**Issue Date** : 09/15/2009
**Application No** : 10/624,945
**Filed** : 07/22/2003

: NOTICE CONCERNING IMPROPER
: CALCULATION OF PATENT TERM
: ADJUSTMENT BASED UPON USPTO
: IMPROPERLY MEASURING REDUCTION
: PERIOD UNDER 37 CFR 1.704(c)(10).

The United States Patent and Trademark Office (USPTO) discovered that in processing the recent recalculation decisions mailed in response to patentee's filed Request for Recalculation of Patent Term Adjustment in view of Wyeth, the USPTO improperly measured the reduction period for reductions under 37 CFR 1.704(c)(10). Pursuant to 37 CFR 1.704(c)(10), patentee's reduction begins on the date of filing the amendment under 37 CFR 1.312 ("1.312 amendment") or other related paper and ends on the date that the Office mails a response to the filing of the 1.312 amendment or other paper. It has been discovered that during the recalculation, the calculation failed to the limit the reduction to the mail date of the response to the 1.312 amendment or other paper. Accordingly, patentee's reductions were greater than warranted.

This notice **VACATES** the previous GRANTED request for recalculation and provides patentee with a revised GRANTED recalculation.

The patent term adjustment has been determined to be **642** days. The USPTO will *sua sponte* issue a certificate of correction reflecting the amount of patent term adjustment (PTA) days determined by the recalculation.

Prior to the issuance of the certificate of correction, the USPTO will afford patentee an opportunity to be heard and request reconsideration. Accordingly, patentee has **one month or thirty (30) days** from the mail date of this notice, whichever is longer, to file a request for reconsideration of this PTA calculation. See 35 U.S.C. § 154(b)(3)(B)(ii) and 37 CFR 1.322(a)(4).

Patentee should use document code PET.OP if electronically filing a request for reconsideration of this PTA calculation. The patentee must also include the information required by 37 CFR 1.705(b)(2), and the fee required by 37 CFR 1.18(e). If patentee does not file a timely request for reconsideration of this PTA calculation, including the information required by 37 CFR 1.705(b)(2) and the fee required by 37 CFR 1.18(e), the USPTO will issue a certificate of correction reflecting the PTA determination noted above.

Patentee should be aware that in order to preserve the right of review of the USPTO's PTA determination in the United States District Court for the District of Columbia, patentee must ensure that the steps required under 35 U.S.C. § 154 (b)(4) are taken in a timely manner. Nothing in the request for recalculation should be construed as providing an alternative time frame for commencing a civil action under 35 U.S.C. § 154(b)(4).

UNITED STATES PATENT AND TRADEMARK OFFICE

Commissioner for Patents
United States Patent and Trademark Office
P.O. Box 1450
Alexandria, VA 22313-1450
www.uspto.gov

SEED INTELLECTUAL PROPERTY LAW GROUP PLLC
701 FIFTH AVE
SUITE 6300
SEATTLE WA 98104-7092

**COPY MAILED**

JUN 21 2005

**OFFICE OF PETITIONS**

Applicant: Raymond et al.
Appl. No.: 10/624,946
Filing Date: July 21, 2003
Title: 3-NITROGEN-6, 7-DIOXYGEN STEROIDS AND USES RELATED THERETO
Attorney Docket No.: 480117.407C1
Pub. No.: US 2004/0138186 A1
Pub. Date: July 15, 2004

This is a decision on the request for a corrected patent application publication under 37 CFR 1.221(b), filed on September 2, 2004, for the above-identified application.

The request is granted.

The corrected patent application publication will be published in due course, unless the patent issues before the application republishes.

Inquiries relating to this matter may be directed to Mark Polutta at (571) 272-7709.

Mark O. Polutta
Office of Patent Legal Administration
Office of the Deputy Commissioner
for Patent Examination Policy

SPE RESPONSE FOR CERTIFICATE OF CORRECTION

Paper No.: _____

DATE : 6/2/2008

TO SPE OF : ART UNIT 1600 (1617) 1612

SUBJECT : Request for Certificate of Correction on Patent No.: 7,112,580

Attn: Barbara Badio

A response is requested with respect to the accompanying request for a certificate of correction.

Please complete this form and forward within 7 days to: Scanning customer Support

Send copy also via PTO mail to:
**Certificates of Correction Branch – 2900 South Tower 9A39A**
Palm location **7580** - Tel. No. 308-8309

With respect to the change(s) requested, correcting Office and/or Applicant's errors, should the patent read as shown in the certificate of correction? No new matter should be introduced, nor should the scope or meaning of the claims be changed.

***Ok to enter the changes as req. in COCIN?**

Thank You For Your Assistance

*Ernest C. White, LIE - 308-9390x122*
Certificates of Correction Branch

**The request for issuing the above-identified correction(s) is hereby:**
Note your decision on the appropriate box.

- ☒ **Approved** — All changes apply.
- ☐ **Approved in Part** — Specify below which changes **do not** apply.
- ☐ **Denied** — State the reasons for denial below.

**Comments:**

Entrance of correction is approved.

Frederick [signature]
Supervisor, Art Unit 1612 06/09/08

PTO/SB/66 (03-09)
Approved for use through 03/31/2012. OMB 0651-0016
U.S. Patent and Trademark Office: U.S. DEPARTMENT OF COMMERCE
Under the Paperwork Reduction Act of 1995, no persons are required to respond to a collection of information unless it displays valid OMB control number.

# PETITION TO ACCEPT UNINTENTIONALLY DELAYED PAYMENT OF MAINTENANCE FEE IN AN EXPIRED PATENT (37 CFR 1.378(c))

| Patent Number | Issue Date (YYYY-MM-DD) | Application Number | Filing Date (YYYY-MM-DD) | Docket Number (if applicable) |
|---|---|---|---|---|
| 6895838 | 2005-05-24 | 10624968 | 2003-07-22 | |

CAUTION: Maintenance fee (and surcharge, if any) payment must correctly identify: (1) the patent number and (2) the application number of the actual U.S. application leading to issuance of that patent to ensure the fee(s) is/are associated with the correct patent. 37 CFR 1.366(c) and (d).

SMALL ENTITY
☒ Patentee claims, or has previously claimed, small entity status. See 37 CFR 1.27.

LOSS OF ENTITLEMENT TO SMALL ENTITY STATUS
☐ Patentee is no longer entitled to small entity status. See 37 CFR 1.27(g)

| NOT Small Entity | | Small Entity | |
|---|---|---|---|
| Fee | Code | Fee | Code |
| ○ 3 ½ year | (1551) | ◉ 3 ½ year | (2551) |
| ○ 7 ½ year | (1552) | ○ 7 ½ year | (2552) |
| ○ 11 ½ year | (1553) | ○ 11 ½ year | (2553) |

SURCHARGE
The surcharge required by 37 CFR 1.20(i)(2) (Fee Code 1558) must be paid as a condition of accepting unintentionally delayed payment of the maintenance fee.

MAINTENANCE FEE (37 CFR 1.20(e)-(g))
The appropriate maintenance fee must be submitted with this petition.

STATEMENT
THE UNDERSIGNED CERTIFIES THAT THE DELAY IN PAYMENT OF THE MAINTENANCE FEE TO THIS PATENT WAS UNINTENTIONAL

PETITIONER(S) REQUEST THAT THE DELAYED PAYMENT OF THE MAINTENANCE FEE BE ACCEPTED AND THE PATENT REINSTATED

THIS PORTION MUST BE COMPLETED BY THE SIGNATORY OR SIGNATORIES

37 CFR 1.378(d) states: "Any petition under this section must be signed by an attorney or agent registered to practice before the Patent and Trademark Office, or by the patentee, the assignee, or other party in interest."

I certify, in accordance with 37 CFR 1.4(d)(4) that I am

○ An attorney or agent registered to practice before the Patent and Trademark Office

◉ A sole patentee

○ A joint patentee; I certify that I am authorized to sign this submission on behalf of all the other patentees.

○ A joint patentee; all of whom are signing this e-petition

○ The assignee of record of the entire interest

| Sole Patentee | | | |
|---|---|---|---|
| A signature of the applicant or representative is required in accordance with 37 CFR 1.33 and 10.18. Please see 37 CFR 1.4(d) for the form of the signature. | | | |
| Signature | /Mark Stahnke/ | Date (YYYY-MM-DD) | 2009-09-10 |
| Name | Mark Stahnke | | |

This collection of information is required by 37 CFR 1.378(c). The information is required to obtain or retain a benefit by the public which is to file (and by the USPTO to process) an application. Confidentiality is governed by 35 U.S.C. 122 and 37 CFR 1.11 and 1.14. This collection is estimated to take 1 hour to complete, including gathering, preparing, and submitting the completed application form to the USPTO. Time will vary depending upon the individual case. Any comments on the amount of time you require to complete this form and/ or suggestions for reducing this burden, should be sent to the Chief Information Officer, U.S. Patent and Trademark Office, U.S. Department of Commerce, P.O. Box 1450, Alexandria, VA 22313-1450. DO NOT SEND FEES OR COMPLETED FORMS TO THIS ADDRESS. **This form can only be used when in conjunction with EFS-Web. If this form is mailed to the USPTO, it may cause delays in reinstating the patent.**

# Privacy Act Statement

The Privacy Act of 1974 (P.L. 93-579) requires that you be given certain information in connection with your submission of the attached form related to a patent application or patent. Accordingly, pursuant to the requirements of the Act, please be advised that: (1) the general authority for the collection of this information is 35 U.S.C. 2(b)(2); (2) furnishing of the information solicited is voluntary; and (3) the principal purpose for which the information is used by the U.S. Patent and Trademark Office is to process and/or examine your submission related to a patent application or patent. If you do not furnish the requested information, the U.S. Patent and Trademark Office may not be able to process and/or examine your submission, which may result in termination of proceedings or abandonment of the application or expiration of the patent.

The information provided by you in this form will be subject to the following routine uses:

1. The information on this form will be treated confidentially to the extent allowed under the Freedom of Information Act (5 U.S.C. 552) and the Privacy Act (5 U.S.C. 552a). Records from this system of records may be disclosed to the Department of Justice to determine whether the Freedom of Information Act requires disclosure of these records.

2. A record from this system of records may be disclosed, as a routine use, in the course of presenting evidence to a court, magistrate, or administrative tribunal, including disclosures to opposing counsel in the course of settlement negotiations.

3. A record in this system of records may be disclosed, as a routine use, to a Member of Congress submitting a request involving an individual, to whom the record pertains, when the individual has requested assistance from the Member with respect to the subject matter of the record.

4. A record in this system of records may be disclosed, as a routine use, to a contractor of the Agency having need for the information in order to perform a contract. Recipients of information shall be required to comply with the requirements of the Privacy Act of 1974, as amended, pursuant to 5 U.S.C. 552a(m).

5. A record related to an International Application filed under the Patent Cooperation Treaty in this system of records may be disclosed, as a routine use, to the International Bureau of the World Intellectual Property Organization, pursuant to the Patent Cooperation Treaty.

6. A record in this system of records may be disclosed, as a routine use, to another federal agency for purposes of National Security review (35 U.S.C. 181) and for review pursuant to the Atomic Energy Act (42 U.S.C. 218(c)).

7. A record from this system of records may be disclosed, as a routine use, to the Administrator, General Services, or his/her designee, during an inspection of records conducted by GSA as part of that agency's responsibility to recommend improvements in records management practices and programs, under authority of 44 U.S.C. 2904 and 2906. Such disclosure shall be made in accordance with the GSA regulations governing inspection of records for this purpose, and any other relevant (i.e., GSA or Commerce) directive. Such disclosure shall not be used to make determinations about individuals.

8. A record from this system of records may be disclosed, as a routine use, to the public after either publication of the application pursuant to 35 U.S.C. 122(b) or issuance of a patent pursuant to 35 U.S.C. 151. Further, a record may be disclosed, subject to the limitations of 37 CFR 1.14, as a routine use, to the public if the record was filed in an application which became abandoned or in which the proceedings were terminated and which application is referenced by either a published application, an application open to public inspections or an issued patent.

9. A record from this system of records may be disclosed, as a routine use, to a Federal, State, or local law enforcement agency, if the USPTO becomes aware of a violation or potential violation of law or regulation.

# UNITED STATES PATENT AND TRADEMARK OFFICE

Commissioner for Patents
United States Patent and Trademark Office
P.O. Box 1450
Alexandria, VA 22313-1450
www.uspto.gov

In re Patent No. 6895838
Issue Date: May 24,2005
Application No. 10624968
Filed: July 22,2003
Attorney Docket No. 49076 MEG S971

:
:DECISION GRANTING PETITION
:UNDER 37 CFR 1.378(c)
:

This is a decision on the electronic petition, filed September 10,2009 ,under 37 CFR 1.378(c) to accept the unintentionally delayed payment of the 3.5 year maintenance fee for the above-identified patent.

The petition is **GRANTED**.

The maintenance fee is accepted, and the above-identified patent reinstated as of September 10,2009 . This decision also constitutes notice that the fee has been accepted. An electronic copy of the petition and this decision has been created as an entry in the Image File Wrapper. Nevertheless, petitioner should print and retain an independent copy.

Telephone inquiries related to this electronic decision should be directed to the Electronic Business Center at 1-866-217-9197.

UNITED STATES PATENT AND TRADEMARK OFFICE

Commissioner for Patents
United States Patent and Trademark Office
P.O. Box 1450
Alexandria, VA 22313-1450
www.uspto.gov

**LUIS ALVARO ROBLE**
**1033½ MEADOWBROOK AVENUE**
**LOS ANGELES, CA 90019**

COPY MAILED

APR 28 2005

OFFICE OF PETITIONS

| | | |
|---|---|---|
| In re Application of | : | |
| Luis Alvaro Roble | : | |
| Application No. 10/624,972 | : | ON PETITION |
| Filed: July 22, 2003 | : | |
| For: TRIMMER GLOVE | : | |

This is a decision on the petition under 37 CFR 1.137(b), filed March 8, 2005, to revive the above-identified application.

The petition is **GRANTED.**

The above-identified application became abandoned for failure to reply in a timely manner to the Notice to File Missing Parts of Nonprovisional Application (Notice) mailed December 4, 2003. The Notice set a period for reply of two (2) months from the mail date of the Notice. No extensions of time under the provisions of 37 CFR 1.136(a) were obtained. Accordingly, the above-identified application became abandoned on February 5, 2004.

Telephone inquiries concerning this decision should be directed to Wan Laymon at (571) 272-3220.

This matter is being referred to the Office of Initial Patent Examination for preexamination processing.

Wan Laymon
Petitions Examiner
Office of Petitions
Office of the Deputy Commissioner
for Patent Examination Policy

UNITED STATES PATENT AND TRADEMARK OFFICE

Commissioner for Patents
United States Patent and Trademark Office
P.O. Box 1450
Alexandria, VA 22313-1450
www.uspto.gov

**LEO KNIGHT**
**PO BOX 530058**
**HENDERSON, NV 89053**

COPY MAILED

SEP 2 0 2005

OFFICE OF PETITIONS

| | | |
|---|---|---|
| In re Application of | : | |
| Leo Donald Knight | : | |
| Application No. 10/624,973 | : | ON PETITION |
| Filed: July 23, 2003 | : | |
| For: PORTABLE CAMPFIRE IN A CAN | : | |

This is a decision on the petition under 37 CFR 1.137(b), filed August 22, 2005, to revive the above-identified application.

The petition is **GRANTED**.

The above-identified application became abandoned for failure to reply in a timely manner to the non-final Office action mailed December 13, 2004, which set a shortened statutory period for reply of three (3) months. A two (2) month extensions of time under the provisions of 37 CFR 1.136(a) were obtained. Accordingly, the above-identified application became abandoned on May 14, 2005.

The above-identified application is being revived solely for purposes of continuity. As continuity has been established by this decision reviving the above-identified application, the above-identified application is again abandoned in favor of a continuing application No. 11/208,172.

Telephone inquiries concerning this decision should be directed to Wan Laymon at (571) 272-3220.

This matter is being referred to Files Repository.

Wan Laymon
Petitions Examiner
Office of Petitions
Office of the Deputy Commissioner
for Patent Examination Policy

UNITED STATES PATENT AND TRADEMARK OFFICE

Commissioner for Patents
United States Patent and Trademark Office
P.O. Box 1450
Alexandria, VA 22313-1450
www.uspto.gov
DIW May-05

MICHAEL P. MORRIS
BOEHRINGER INGELHEIM CORPORATION
900 RIDGEBURY ROAD
P. O. BOX 368
RIDGEFIELD CT 06877-0368

**COPY MAILED**

MAY 1 1 2005

**OFFICE OF PETITIONS**

| | | |
|---|---|---|
| In re Application of | : | |
| Heckel et al. | : | |
| Application No. 10/624,983 | : | ON PETITION |
| Filed: 22 July, 2003 | : | |
| Atty Docket No. 1/1373 | : | |

This is a decision on the petition filed on 11 April, 2005, requesting that the application be accorded a filing date of 22 July, 2003, with a complete specification, including 19 claims, as a part of the original disclosure.

The petition is **GRANTED**

The application was filed on 22 July, 2003. On 21 October, 2004, the Office of Initial Patent Examination (OIPE) mailed a "Notice of Incomplete Nonprovisional Application" stating that the application did not include at least one claim and that a complete specification as prescribed by 35 U.S.C. § 112 was required. The Notice also stated that the oath or declaration and a late filing surcharge were required. In response, on 19 January, 2005, petitioners filed an executed declaration, the late filing surcharge, and a one (1) month extension of time.

Accordingly, on 8 February, 2005, OIPE mailed a "Notice of Incomplete Nonprovisional Application" stating that application did not include at least one claim as prescribed by 35 U.S.C. § 112, and that the filing date would be the date of receipt of a complete specification including at least one claim were received in the Office. The English translation fee was also required. A two (2) month period for reply was set. On 11 April, 2005 (certificate of mailing date 8 April, 2005), the present petition was filed.

The present petition asserts that a complete specification, including 19 claims, in German, was present in the application papers deposited on 22 July, 2003. The petition is accompanied by a specification in English of 356 pages, including 19 claims, and a declaration by Jane Roberta Mann stating that the English specification filed therewith is a true and accurate translation of the German language document filed on 22 July, 2003.

The German language specification filed on 22 July, 2003, has been located in the file. Accordingly, the "Notice" mailed on 8 February, 2005, was mailed in error and is hereby vacated. The petition fee has been refunded to counsel's deposit account, No. 02-2955, as authorized in the present petition.

The English translation fee of $130.00 will be charged to counsel's deposit account as authorized in the present petition.

The application file will be referred to OIPE for further processing using the 345 pages of German text as the specification and claims, including one page of abstract, as the original disclosure, and an indication in Office records that 19 claims were submitted on filing. The English copy of the specification, claims, and abstract filed with the present petition on 11 April, 2005, will be used for examination purposes.

Telephone inquiries specific to this matter should be directed to the undersigned at (571) 272-3231.

DWood

Douglas I. Wood
Senior Petitions Attorney
Office of Petitions

UNITED STATES PATENT AND TRADEMARK OFFICE

COMMISSIONER FOR PATENTS
UNITED STATES PATENT AND TRADEMARK OFFICE
P.O. BOX 1450
ALEXANDRIA, VA 22313-1450
www.uspto.gov

THOMSON LICENSING INC.
PATENT OPERATIONS
PO BOX 5312
PRINCETON, NJ 08543-5312

COPY MAILED
FEB 02 2006
OFFICE OF PETITIONS

| | | |
|---|---|---|
| In re Application of | : | |
| Kendall, et al. | : | DECISION ON PETITION |
| Application No. 10/625,003 | : | |
| Filed: July 22, 2003 | : | |
| Docket No.: PU020375 | : | |

This is a decision on the petition under 37 CFR 1.137(b), filed December 30, 2005, to revive the above-identified application.

The petition is **GRANTED**.

This application became abandoned January 6, 2006 for failure to timely submit the issue fee as required by the Notice of Allowance and Issue Fee Due (Notice) mailed October 5, 2005. The Notice set a three month statutory period for reply. Notice of Abandonment was mailed December 14, 2006.

A grantable petition pursuant to 37 C.F.R. § 1.137(b) must be accompanied by: (1) the required reply to the outstanding Office action or notice, unless previously filed; (2) the petition fee as set forth in 37 C.F.R. § 1.17(m); (3) a statement that the entire delay in filing the required reply from the due date for the reply until the filing of a grantable petition pursuant to 37 C.F.R. § 1.137(b) was unintentional; and (4)any terminal disclaimer (and fee set forth in 37 C.F.R. § 1.20(d)) required pursuant to 37 C.F.R. § 1.137(c).

The instant petition has been reviewed and found in compliance with the provisions of 37 C.F.R. § 1.137(b). Accordingly, the failure to timely submit a proper reply to the Notice is accepted as having been unintentionally delayed.

This application will be forwarded to the Publications Division for further processing.

Telephone inquiries concerning this matter may be directed to the undersigned at (571) 272-3205.

Alesia M. Brown
Petitions Attorney
Office of Petitions

UNITED STATES PATENT AND TRADEMARK OFFICE

Commissioner for Patents
United States Patent and Trademark Office
P.O. Box 1450
Alexandria, VA 22313-1450
www.uspto.gov

OSHA LIANG L.L.P.
1221 MCKINNEY STREET
SUITE 2800
HOUSTON TX 77010

COPY MAILED

SEP 26 2008

OFFICE OF PETITIONS

In re Patent No. 7,295,501 :
Issued: November 13, 2007 :
Application No. 10/625,005 : PATENT TERM ADJUSTMENT
Filed: July 23, 2003 :
Dkt. No.: 04536/019001 :

This is a decision on the "REQUEST FOR RECONSIDERATION OF PATENT TERM ADJUSTMENT PURSUANT TO 37 C.F.R. § 1.705(d)," filed December 17, 2007.

The application for patent term adjustment ("PTA") under 37 CFR 1.705(d) is GRANTED.

The above-identified application matured into U.S. Patent No. 7,295,501 on November 13, 2007. The instant request for reconsideration was timely filed in accordance with 37 CFR 1.705(d). The patent issued with a PTA of 599 days. Patentee argues that the adjustment correct adjustment at the time of issuance is 642 days.

At the time of allowance, the application was entitled to an adjustment of 666 days. The adjustment was errantly reduced 43 days in connection with the issue fee payment allegedly received September 13, 2007. A review of the record reveals that the issue fee payment was submitted June 20, 2007 via USPS Express Mail in accordance with 37 CFR 1.10.

In view of the submission of the issue fee on June 20, 2007, the patent is entitled to an additional adjustment of 24 days in accordance with 37 CFR 1.702(a)(4). The adjustment commenced October 21, 2007, the day after the date that is four months after the date the issue fee was paid, and ended November 13, 2007, the date that the patent issued.

Accordingly, at the time of issuance, the application was entitled to a patent term adjustment of 666 days.

Patentee's deposit account has been charged the required PTA application fee of $200.00, as authorized.

This application file will be forwarded to the Certificate of Corrections branch for issuance of a certificate of correction to indicate that the term of this patent is extended or adjusted under 35 U.S.C. 154(b) by 666 days.

Telephone inquiries specific to this matter may be directed to Petitions Attorney Alesia M. Brown at (571) 272-3205.

Kery A Fries

Kery Fries
Senior Patent Attorney
Office of Patent Legal Administration
Office of Deputy Commissioner
for Patent Examination Policy

Enclosure: Draft Certificate of Correction

UNITED STATES PATENT AND TRADEMARK OFFICE

# CERTIFICATE OF CORRECTION

PATENT : 7,295,501 B2

DATED : November 13, 2007

INVENTOR(S) : Ono

It is certified that error appears in the above-identified patent and that said Letters Patent is hereby corrected as shown below:

On the cover page,

[*] Notice: Subject to any disclaimer, the term of this patent is extended or adjusted under 35 USC 154(b) by 599 days

Delete the phrase "by 599 days" and insert – by 666 days–

Day : Friday
Date: 9/26/2008

PALM INTRANET

Time: 09:57:00

| PTA Calculations for Application: 10/625005 | | | |
|---|---|---|---|
| Application Filing Date: | 07/23/2003 | PTO Delay (PTO): | 642 |
| Issue Date of Patent: | 11/13/2007 | Three Years: | 0 |
| Pre-Issue Petitions: | 0 | Applicant Delay (APPL): | 43 |
| Post-Issue Petitions: | 0 | Total PTA (days): | 666 |
| PTO Delay Adjustment: | 67 | | |

**File Contents History**

| Number | Date | Contents Description | PTO | APPL | START |
|---|---|---|---|---|---|
| 63 | 09/26/2008 | ADJUSTMENT OF PTA CALCULATION BY PTO | 67 | | |
| 58.5 | 10/24/2007 | PTA 36 MONTHS | | | |
| 58 | 11/13/2007 | PATENT ISSUE DATE USED IN PTA CALCULATION | | | |
| 57 | 10/05/2007 | EXPORT TO FINAL DATA CAPTURE | | | |
| 56 | 10/04/2007 | DISPATCH TO FDC | | | |
| 55 | 09/21/2007 | MAIL-PETITION TO REVIVE APPLICATION - GRANTED | | | |
| 54 | 09/13/2007 | PETITION ENTERED | | | |
| 53 | 09/20/2007 | APPLICATION IS CONSIDERED READY FOR ISSUE | | | |
| 52 | 09/13/2007 | ISSUE FEE PAYMENT VERIFIED | | 43 | 45 |
| 51 | 09/20/2007 | WITHDRAW PUBLICATION/PRE-EXAM ABANDON | | | |
| 50 | 09/13/2007 | ISSUE FEE PAYMENT RECEIVED | | | |
| 49 | 08/24/2007 | MAIL ABANDONMENT FOR FAILURE TO PAY ISSUE FEE | | | |
| 48 | 08/24/2007 | ABANDONMENT FOR FAILURE TO PAY ISSUE FEE | | | |
| 47 | 05/31/2007 | FINISHED INITIAL DATA CAPTURE | | | |
| 46 | 05/04/2007 | EXPORT TO INITIAL DATA CAPTURE | | | |
| 45 | 05/01/2007 | MAIL NOTICE OF ALLOWANCE | | | |
| 44 | 04/28/2007 | NOTICE OF ALLOWANCE DATA VERIFICATION COMPLETED | | | |
| 43 | 03/20/2007 | ISSUE REVISION COMPLETED | | | |
| 42 | 03/21/2007 | ALLOWED CASE RETURNED TO THE EXAMINER FOR CLERICAL PROCESSING | | | |
| 41 | 03/20/2007 | DOCUMENT VERIFICATION | | | |

| | | | | | |
|---|---|---|---|---|---|
| 40 | 03/15/2007 | NOTICE OF ALLOWABILITY | | | |
| 39 | 02/16/2007 | MAIL EXAMINER INTERVIEW SUMMARY (PTOL - 413) | | | |
| 38 | 01/25/2007 | EXAMINER INTERVIEW SUMMARY RECORD (PTOL - 413) | | | |
| 37 | 02/12/2007 | DATE FORWARDED TO EXAMINER | | | |
| 36 | 01/29/2007 | AMENDMENT SUBMITTED/ENTERED WITH FILING OF CPA/RCE | | | |
| 35 | 02/12/2007 | DATE FORWARDED TO EXAMINER | | | |
| 34 | 01/29/2007 | REQUEST FOR CONTINUED EXAMINATION (RCE) | | | |
| 33 | 02/12/2007 | DISPOSAL FOR A RCE/CPA/129 (EXPRESS ABANDONMENT IF CPA) | | | |
| 31 | 01/29/2007 | WORKFLOW - REQUEST FOR RCE - BEGIN | | | |
| 29 | 11/06/2006 | MAIL FINAL REJECTION (PTOL - 326) | | | |
| 28 | 11/02/2006 | FINAL REJECTION | | | |
| 27 | 10/03/2006 | DATE FORWARDED TO EXAMINER | | | |
| 26 | 09/27/2006 | RESPONSE AFTER NON-FINAL ACTION | | | |
| 25 | 06/27/2006 | MAIL NON-FINAL REJECTION | 642 | | -1 |
| 24 | 06/22/2006 | NON-FINAL REJECTION | | | |
| 23 | 07/23/2003 | INFORMATION DISCLOSURE STATEMENT CONSIDERED | | | |
| 22 | 12/09/2004 | INFORMATION DISCLOSURE STATEMENT CONSIDERED | | | |
| 21 | 07/23/2003 | INFORMATION DISCLOSURE STATEMENT (IDS) FILED | | | |
| 20 | 12/09/2004 | INFORMATION DISCLOSURE STATEMENT (IDS) FILED | | | |
| 19 | 06/21/2006 | CASE DOCKETED TO EXAMINER IN GAU | | | |
| 18 | 03/21/2006 | CASE DOCKETED TO EXAMINER IN GAU | | | |
| 17 | 03/14/2006 | CASE DOCKETED TO EXAMINER IN GAU | | | |
| 16 | 03/14/2006 | CASE DOCKETED TO EXAMINER IN GAU | | | |
| 15 | 11/11/2005 | CASE DOCKETED TO EXAMINER IN GAU | | | |
| 14 | 06/08/2005 | CASE DOCKETED TO EXAMINER IN GAU | | | |
| 12 | 07/22/2004 | CASE DOCKETED TO EXAMINER IN GAU | | | |
| 11 | 07/21/2004 | CASE DOCKETED TO EXAMINER IN GAU | | | |
| 10 | 04/07/2004 | IFW TSS PROCESSING BY TECH CENTER COMPLETE | | | |
| 9 | 03/19/2004 | APPLICATION RETURN FROM OIPE | | | |
| 8 | 03/22/2004 | APPLICATION IS NOW COMPLETE | | | |

| | | | | | |
|---|---|---|---|---|---|
| 7 | 03/19/2004 | APPLICATION RETURN TO OIPE | | | |
| 6 | 03/18/2004 | APPLICATION DISPATCHED FROM OIPE | | | |
| 5 | 03/19/2004 | APPLICATION IS NOW COMPLETE | | | |
| 4 | 10/27/2003 | CLEARED BY L&R (LARS) | | | |
| 3 | 10/09/2003 | INTENTIONALLY REFERRED BY OIPE OR L&R | | | |
| 2 | 09/02/2003 | IFW SCAN & PACR AUTO SECURITY REVIEW | | | |
| 1 | 07/23/2003 | INITIAL EXAM TEAM NN | | | |

**Search Another: Application#** Search

**EXPLANATION OF PTA CALCULATION**

**EXPLANATION OF PTE CALCULATION**

To go back, right click here and select Back. To go forward, right click here and select Forward. To refresh, right click here and select Refresh.

Back to OASIS | Home page

UNITED STATES PATENT AND TRADEMARK OFFICE

Commissioner for Patents
United States Patent and Trademark Office
P.O. Box 1450
Alexandria, VA 22313-1450
www.uspto.gov

JONDLE & ASSOCIATES P.C.
9085 EAST MINERAL CIRCLE
SUITE 200
CENTENNIAL, CO 80112

COPY MAILED

APR 20 2005

OFFICE OF PETITIONS

| | | |
|---|---|---|
| In re Application of | : | |
| Green, et al. | : | |
| Application No. 10/625,046 | : | ON PETITION |
| Filed: July 22, 2003 | : | |
| Attorney Docket No. 1760-292 | : | |

This is a decision on the petition under 37 CFR 1.53, filed July 16, 2004, requesting that the above-identified application be accorded a filing date of July 22, 2003. The petition was recently forwarded to this office for consideration.

The application was deposited on July 22, 2003. However, on July 13, 2004, the Office of Initial Patent Examination (OIPE) mailed a "Notice of Incomplete Nonprovisional Application" which stated a filing date was not accorded and that the application was deposited without drawings.

In response, on July 16, 2004, the instant petition was filed.

Petitioner states, "Applicant has reviewed the application and 35 USC 113. Applicant has determined that no drawings are necessary for the understanding of the subject matter sought to be patented."

It is noted that the petition contains statements that drawings are not necessary and the petition is signed by a registered practitioner.

Furthermore, it is confirmed that the nonprovisional application contains a process claim that includes the term "method" in it's introductory phrase and therefore drawings are not required. MPEP 608.02 states:

> "An OIPE formality examiner should not treat an application without drawings as incomplete if drawings are not required.

A drawing is not required for a filing date under 35 U.S.C. 111 and 113 if the application contains:

(A) at least one process claim including the term "process" or "method" in its introductory phrase;

Since the claims contain at least one process claim including the term "process" or "method" in its introductory phrase, drawings are not required in order to accord a filing date.

Accordingly, the petition is granted.

The petition fee has not been charged.

The application will be returned to the Office of Initial Patent Examination for processing with a filing date of July 22, 2003, with zero (0) drawings received on that date.

Telephone inquiries concerning this matter may be directed to the undersigned at (571)272-3228.

Edward J. Tannouse
Petitions Attorney
Office of Petitions/Patent
United States Patent and Trademark Office

UNITED STATES PATENT AND TRADEMARK OFFICE

Commissioner for Patents
United States Patent and Trademark Office
P.O. Box 1450
Alexandria, VA 22313-1450
www.uspto.gov

JONDLE & ASSOCIATES P.C.
9085 EAST MINERAL CIRCLE
SUITE 200
CENTENNIAL, CO 80112

COPY MAILED

APR 2 0 2005

OFFICE OF PETITIONS

| | | |
|---|---|---|
| In re Application of | : | |
| Green, et al. | : | |
| Application No. 10/625,046 | : | ON PETITION |
| Filed: July 22, 2003 | : | |
| Attorney Docket No. 1760-292 | : | |

This is a decision on the petition under 37 CFR 1.53, filed July 16, 2004, requesting that the above-identified application be accorded a filing date of July 22, 2003. The petition was recently forwarded to this office for consideration.

The application was deposited on July 22, 2003. However, on July 13, 2004, the Office of Initial Patent Examination (OIPE) mailed a "Notice of Incomplete Nonprovisional Application" which stated a filing date was not accorded and that the application was deposited without drawings.

In response, on July 16, 2004, the instant petition was filed.

Petitioner states, "Applicant has reviewed the application and 35 USC 113. Applicant has determined that no drawings are necessary for the understanding of the subject matter sought to be patented."

It is noted that the petition contains statements that drawings are not necessary and the petition is signed by a registered practitioner.

Furthermore, it is confirmed that the nonprovisional application contains a process claim that includes the term "method" in it's introductory phrase and therefore drawings are not required. MPEP 608.02 states:

> "An OIPE formality examiner should not treat an application without drawings as incomplete if drawings are not required.

A drawing is not required for a filing date under 35 U.S.C. 111 and 113 if the application contains:

(A) at least one process claim including the term "process" or "method" in its introductory phrase;

Since the claims contain at least one process claim including the term "process" or "method" in its introductory phrase, drawings are not required in order to accord a filing date.

Accordingly, the petition is granted.

The petition fee has not been charged.

The application will be returned to the Office of Initial Patent Examination for processing with a filing date of July 22, 2003, with zero (0) drawings received on that date.

Telephone inquiries concerning this matter may be directed to the undersigned at (571)272-3228.

Edward J. Tannouse
Petitions Attorney
Office of Petitions/Patent
United States Patent and Trademark Office

UNITED STATES PATENT AND TRADEMARK OFFICE

COMMISSIONER FOR PATENTS
UNITED STATES PATENT AND TRADEMARK OFFICE
P.O. BOX 1450
ALEXANDRIA, VA 22313-1450
www.uspto.gov

MAIL

JUL 2 0 2004

DIRECTOR OFFICE
TECHNOLOGY CENTER 2600

ERNEST D BUFF & ASSOCIATES, LLC
245 SOUTH ST
MORRISTOWN NJ 07960

| | | |
|---|---|---|
| In re Application of | : | |
| Joan M. Monck, et al. | : | |
| Application No. 10/625,058 | : | DECISION ON PETITION |
| Filed: July 24, 2003 | : | TO MAKE SPECIAL |
| For: MULTIDIRECTIONAL CLUSTER LIGHTS FOR MOTOR VEHICLES | : | |

This is a decision on the petition filed November 17, 2003 under Manual of Patent Examination Procedure §708.02, VIII requesting accelerated examination.

The petition under Manual of Patent Examination Procedure §708.02, VIII, must:
(1) be filed prior to receiving any examination by the examiner,
(2) be accompanied by the required fee- $130,
(3) the claims should be directed to a single invention (if it is determined that the claims pertain to more than one invention, then applicant will have to make an election without traverse or forfeit accelerated examination status),
(4) state that a pre-examination search was made, and fully discuss the search method employed, such as classes and subclasses searched, publications, Chemical abstracts, patents, etc. A search made by a foreign patent office satisfies this requirement,
(5) be accompanied by a copy of each of the references most closely related to the subject matter encompassed by the claims if said references are not already of record,
(6) fully discuss the references, pointing out with the particularity required by 37 C.F.R. §1.111 (b) and (c), how the claimed subject matter is patentable over the references.

The petitioner meets all the above-listed requirements. Accordingly, the petition is **GRANTED**.

The application will retain its special status throughout its entire prosecution, including any appeal to the Board of Patent Appeals and Interferences, subject only to diligent prosecution by the applicant. The application file is being forwarded to the examiner for appropriate action in due course.

Krista Zele
Special Program Examiner
Technology Center 2600
Communications

UNITED STATES PATENT AND TRADEMARK OFFICE

Commissioner for Patents
United States Patent and Trademark Office
P.O. Box 1450
Alexandria, VA 22313-1450
www.uspto.gov

ERNEST D. BUFF
ERNEST D. BUFF AND ASSOCIATES, LLC.
231 SOMERVILLE ROAD
BEDMINSTER NJ 07921

**COPY MAILED**

AUG 1 2 2005

**OFFICE OF PETITIONS**

In re Application of
Joan M. MONCK et al
Application No. 10/625,058
Filed: July 24, 2003
Attorney Docket No. 0109-4

DECISION ON PETITION
UNDER 37 CFR 1.137(b)

This is a decision on the petition under 37 CFR 1.137(b), filed June 20, 2005, to revive the above-identified application.

The petition is **GRANTED**.

The application became abandoned for failure to timely submit the issue and publication fees in a timely manner in reply to the Notice of Allowance mailed March 1, 2005, which set a statutory period for reply of three (3) months. Accordingly, the above-identified application became abandoned on June 2, 2005.

The petition satisfies the conditions for revival pursuant to the provisions of 37 CFR 1.137(b) in that (1) the reply in the form of payment of the issue and publication fees; (2) the petition fee of $750; and (3) an adequate statement of unintentional delay have been received. Accordingly, the issue and publication fees are accepted as having been unintentionally delayed.

37 CFR 1.137(b)(3) requires a statement that the entire delay in filing the required reply from the due date for the reply until the filing of a grantable petition pursuant to 37 CFR 1.137(b) was unintentional. Since the statement contained in the petition varies from the language required by 37 CFR 1.137(b)(3), the statement contained in the petition is being construed as the statement required by 37 CFR 1.137(b)(3). Petitioner must notify the Office if this is not a correct interpretation of the statement contained in the petition.

Telephone inquiries concerning this decision should be directed to Amelia Au at (571) 272-7414.

The application file is being referred to the Office of Patent Publication.

Frances Hicks
Lead Petitions Examiner
Office of Petitions

UNITED STATES PATENT AND TRADEMARK OFFICE

UNITED STATES DEPARTMENT OF COMMERCE
United States Patent and Trademark Office
Address: COMMISSIONER FOR PATENTS
P.O. Box 1450
Alexandria, Virginia 22313-1450
www.uspto.gov

PTC Therapeutics, Inc.
100 Corporate Court
South Plainfield, NJ 07080

Mail Date: 04/21/2010

| | | |
|---|---|---|
| **Applicant** | : Richard G. Wilde | : DECISION ON REQUEST FOR |
| **Patent Number** | : 7291603 | : RECALCULATION of PATENT |
| **Issue Date** | : 11/06/2007 | : TERM ADJUSTMENT IN VIEW |
| **Appliction No** | : 10/625,059 | : OF WYETH |
| **Filed** | : 07/22/2003 | : |
| | | : |

The Patentee's Request for Recalculation is **DISMISSED.**

This Request is deemed ineligible for consideration for one or more of the following reasons:

(A). The patent for which PTA recalculation is requested is either a design or reissue application or is a reexamination proceeding;

(B). The patent for which PTA recalculation is requested resulted from a utility or plant application filed under 35 USC 111(a) before May 29, 2000 and no CPA filed in the application on/after May 29, 2000;

(C). The patent for which PTA recalculation is requested resulted from an international application in which the international filing date was before May 29, 2000 and no CPA filed in the application on/after May 29, 2000;

(D). The patent for which PTA recalculation is requested issued on/after March 2, 2010;

(E). The Request for Recalculation was filed more than 180 days after the grant date of the patent and the request was not filed within two months of a dismissal of a request for reconsideration of the of the patent term under 37 CFR 1.705(d);

(F). The Request for Recalculation is not solely limited to USPTO pre-Wyeth interpretation of 35 U.S.C. 154(b)(2)(A);

or

(G). A civil action was filed pursuant to 35 U.S.C. 154(b)(4)(A)concerning the same patent at issue in this request.

Patentee may file a reply to this decision dismissing the Request for Recalculation. Patentee must file such reply within one month or thirty days, whichever is longer, of the mail date of the decision dismissing the Request for Recalculation. No fee is required if patentee is asserting in the reply that the dismissal for ineligibility is improper.

Patentee should use document code PET.OP if electronically filing a reply to this dismissal. If the USPTO finds that the request was improperly deemed ineligible, the USPTO will mail applicant a recalculation determination.

Patentee should be aware that in order to preserve the right to review in the United States District Court for the District of Columbia of the USPTO patent term adjustment determination, patentee must ensure that he or she also take the steps required under 35 U.S.C. 154(b)(4)(A). Nothing in the request for recalculation should be construed as providing an alternative time frame for commencing a civil action under 35 U.S.C. 154 (b)(4)(A).

Any questions concerning this decision should be directed to the Office of Patent Legal Administration at 571-272-7702.

UNITED STATES PATENT AND TRADEMARK OFFICE

UNITED STATES DEPARTMENT OF COMMERCE
United States Patent and Trademark Office
Address: COMMISSIONER FOR PATENTS
P.O. Box 1450
Alexandria, Virginia 22313-1450
www.uspto.gov

WALKER DIGITAL MANAGEMENT, LLC
2 HIGH RIDGE PARK
STAMFORD, CT 06905

Mail Date: 04/21/2010

| | | |
|---|---|---|
| **Applicant** | : Jay S. Walker | : DECISION ON REQUEST FOR |
| **Patent Number** | : 7587334 | : RECALCULATION of PATENT |
| **Issue Date** | : 09/08/2009 | : TERM ADJUSTMENT IN VIEW |
| **Appliction No** | : 10/625,089 | : OF WYETH AND NOTICE OF INTENT TO |
| **Filed** | : 07/22/2003 | : ISSUE CERTIFICATE OF CORRECTION |
| | | : |

The Request for Recalculation is **GRANTED** to the extent indicated.

The patent term adjustment has been determined to be **853** days. The USPTO will *sua sponte* issue a certificate of correction reflecting the amount of PTA days determined by the recalculation.

Prior to the issuance of the certificate of correction, the USPTO will afford patentee an opportunity to be heard and request reconsideration. Accordingly, patentee has **one month or thirty (30) days**, whichever is longer, to file a request for reconsideration of this patent term adjustment calculation. See 35 U.S.C. 154(b)(3)(B)(ii) and 37 CFR 1.322(a)(4). No extensions of time will be granted under 37 CFR 1.136.

Patentee should use document code PET.OP if electronically filing a request for reconsideration of this patent term adjustment calculation. The patentee must also include the information required by 37 CFR 1.705(b)(2) and the fee required by 37 CFR 1.18(e). If patentee does not file a timely request for reconsideration of this patent term adjustment calculation including the information required by 37 CFR 1.705(b)(2) and the fee required by 37 CFR 1.18(e), the USPTO will issue a certificate of correction reflecting the PTA determination noted above.

Patentee should be aware that in order to preserve the right to review in the United States District Court for the District of Columbia of the USPTO patent term adjustment determination, patentee must ensure that he or she also take the steps required under 35 U.S.C. 154(b)(4)(A) in a timely manner. Nothing in the request for recalculation should be construed as providing an alternative time frame for commencing a civil action under 35 U.S.C. 154(b)(4)(A).

Any questions concerning this decision should be directed to the Office of Patent Legal Administration at 571-272-7702.

UNITED STATES PATENT AND TRADEMARK OFFICE

Commissioner for Patents
United States Patent and Trademark Office
P.O. Box 1450
Alexandria, VA 22313-1450
www.uspto.gov

SEP 9 2005

Santiago Munne
220 Washington Str. Apt 4
Hoboken NJ 07030

| | |
|---|---|
| In re Application of : | : |
| Santiago Munne | : |
| Serial No.: 10/625,100 | : PETITION TO MAKE SPECIAL |
| Filed: July 22, 2003 | : |
| Attorney Docket No.: None | : |

This is in response to applicants' petition filed August 23, 2005, to make the above-identified application special under the provisions of 37 CFR 1.102(d), based on applicants who are small entities having applications relating to biotechnology.

Applicants have satisfied the provisions set forth in M.P.E.P. 708.02, XII (A), (B), and (C). The $130.00 petition fee as required by 37 CFR 1.17(h) was charged to applicant's credit card, as authorized. Therefore, the petition is **GRANTED**.

Should there be any questions with regard to this letter please contact Marianne C. Seidel by letter addressed to the Director, Technology Center 1600, PO BOX 1450, ALEXANDRIA, VA 22313-1450, or by telephone at 571-272-0584 or by facsimile transmission to the general Office facsimile number.

Marianne C. Seidel
Special Program Examiner
Technology Center 1600

UNITED STATES PATENT AND TRADEMARK OFFICE

Commissioner for Patents
United States Patent and Trademark Office
P.O. Box 1450
Alexandria, VA 22313-1450
www.uspto.gov

SANTIAGO MUNNE
229 MADISON STREET, APT 2
HOBOKEN NJ 07030

COPY MAILED

SEP 2 0 2006

OFFICE OF PETITIONS

In re Application of
Santiago Munne
Application No. 10/625,100
Filed: July 22, 2003
Title of Invention: **OBTAINING NORMAL DISOMIC STEM CELLS FROM CHROMOSOMALLY ABNORMAL EMBRYOS**

ON PETITION

This is a decision on the petition filed August 4, 2006 under 37 CFR 1.137(b),[1] to revive the above-identified application.

The petition is **GRANTED**.

This application became abandoned for failure to timely reply to the non-Final Office Action mailed November 23, 2005. A shortened statutory period of three months was set for replying to the non-Final Office Action. No extensions of time having been requested, this application became abandoned February 24, 2006. Accordingly, a Notice of Abandonment was mailed on June 1, 2006.

This matter is being referred to Technology Center 1632 for appropriate action on the amendment filed August 4, 2006.

Telephone inquiries concerning this matter should be directed to the undersigned Petitions Attorney at (571) 272-3212.

Patricia Faison-Ball

Patricia Faison-Ball
Senior Petitions Attorney
Office of Petitions

---

[1]Effective December 1, 1997, the provisions of 37 CFR 1.137(b) now provide that where the delay in reply was unintentional, a petition may be filed to revive an abandoned application or a lapsed patent pursuant to 37 CFR 1.137(b). A grantable petition filed under the provisions of 37 CFR 1.137(b) must be accompanied by:

(1) the required reply, unless previously filed. In a nonprovisional application abandoned for failure to prosecute, the required reply may be met by the filing of a continuing application. In a nonprovisional application filed on or after June 8, 1995, and abandoned for failure to prosecute, the required reply may also be met by the filing of a request for continued examination in compliance with § 1.114. In an application or patent, abandoned or lapsed for failure to pay the issue fee or any portion thereof, the required reply must be the payment of the issue fee or any outstanding balance thereof. In an application abandoned for failure to pay the publication fee, the required reply must include payment of the publication fee.

(2) the petition fee as set forth in 37 CFR 1.17(m);

(3) a statement that the entire delay in filing the required reply from the due date for the reply until the filing of a grantable petition pursuant to 37 CFR 1.137(b) was unintentional. The Commissioner may required additional information where there is a question whether the delay was unintentional; and

(4) any terminal disclaimer (and fee as set forth in 37 CFR 1.20(d)) required pursuant to 37 CFR 1.137(c)).

UNITED STATES PATENT AND TRADEMARK OFFICE

COMMISSIONER FOR PATENTS
UNITED STATES PATENT AND TRADEMARK OFFICE
P.O. BOX 1450
ALEXANDRIA, VA 22313-1450
www.uspto.gov

COPY MAILED

SEP 01 2009

OFFICE OF PETITIONS

FISH & RICHARDSON PC
P.O. BOX 1022
MINNEAPOLIS MN 55440-1022

| | |
|---|---|
| In re Patent No. 7,166,283 | : ON PETITIONS under |
| Issued: January 23, 2007 | : 37 CFR 1.183 and ON REQUEST |
| Application No. 10/625,105 | : FOR RECONSIDERATION OF |
| Filed: July 22, 2003 | : PATENT TERM ADJUSTMENT |
| Dkt. No.: 14539-006002 | : |

This is a decision on the 1) Petition under 37 C.F.R. 1.183, requesting that the Office suspend the rules and consider on the merits a Request for Reconsideration of Patent Term Adjustment under 37 C.F.R. 1.705(d) filed more than two months from the date the above-referenced patent issued; and on the 2) APPLICATION FOR PATENT TERM ADJUSTMENT UNDER 37 C.F.R. § 1.705(d), both filed on January 22, 2009.

The petition under 37 CFR 1.183 is **dismissed**.

The request for reconsideration of patent term adjustment under 37 CFR 1.705(d) is **dismissed as untimely filed**.

Any request for reconsideration, whether directed to the decision on petition under 37 CFR 1.183 or to the decision on application for patent term adjustment under 37 CFR 1.705(d), must be filed within two months of the mailing date of this decision. Extensions of time under 37 CFR 1.136 are not permitted. See § 1.181(f).

## BACKGROUND

On January 23, 2007, the above-identified application matured into U.S. Patent No. 7,166,283 with a revised patent term adjustment of 419 days. No request for reconsideration of the patent term adjustment indicated in the patent was filed within two months of the date the patent issued. Patentee now petitions under 37 C.F.R. § 1.183 to (i) suspend or waive the requirement of 37 C.F.R. § 1.705(d) that a Request for Reconsideration of Patent Term Adjustment be filed within two months of the date the patent issued; and (ii) consider the enclosed DETERMINATION OF PATENT TERM ADJUSTMENT - POST GRANT. Patentee references the recent decision in Wyeth v. Dudas, No. 07-1492 (D.D.C. Sept. 30, 2008) as the basis for the petition.

## ON PETITION UNDER 37 CFR 1.183 TO WAIVE THE TWO-MONTH REQUIREMENT OF 37 CFR 1.705(d)

The above-referenced patent issued on January 23, 2007. A request for reconsideration of the patent term adjustment indicated in the patent was not filed until January 22, 2009. Petitioner requests that the Office suspend the rules and consider on the merits the Request for Reconsideration of Patent Term Adjustment under 37 C.F.R. 1.705(d) even though it was untimely filed more than two months from the date the patent issued.

The relevant regulation, 37 CFR 1.705(d), provides that:

> If there is a revision to the patent term adjustment indicated in the notice of allowance, the patent will indicate the revised patent term adjustment. If the patent indicates or should have indicated a revised patent term adjustment, *any request for reconsideration of the patent term adjustment indicated in the patent must be filed within two months of the date the patent issued* and must comply with the requirements of paragraphs (b)(1) and (b)(2) of this section. Any request for reconsideration under this section that raises issues that were raised, or could have been raised, in an application for patent term adjustment under paragraph (b) of this section shall be dismissed as untimely as to those issues. (*emphasis* added).

By the express provisions of 37 CFR 1.705(d), a request for reconsideration of patent term adjustment must be filed within two months of the date the patent issued. It is undisputed that no such request for reconsideration was filed by March 23, 2007, the date two months from the date this patent issued, January 23, 2007. Rather, on January 22, 2009, significantly after the issuance of a decision in Wyeth v. Dudas on September 30, 2008, petitioner filed the instant request for waiver of the two-month requirement.

37 CFR 1.183 provides that:

> In an extraordinary situation, when justice requires, any requirement of the regulations in this part which is not a requirement of the statutes may be suspended or waived by the Director or the Director's designee, *sua sponte*, or on petition of the interested party, subject to such other requirements as may be imposed. Any petition under this section must be accompanied by the petition fee set forth in § 1.17(f).

35 U.S.C. 154, which requires the Office to provide the applicant one opportunity to request reconsideration of any patent term adjustment determination made by the Director, authorizes the Director to establish the procedures for requesting such reconsideration. Those procedures[1]

---

[1] 35 U.S.C. § 154(b)(3) provides that the USPTO shall: (1) prescribe regulations establishing procedures for the application for and determination of patent term adjustments under 35 U.S.C. § 154(b); (2) make a determination of any patent term adjustment under 35 U.S.C. § 154(b) and transmit a notice of that determination with the notice of allowance under 35 U.S.C. § 151; and (3) provide the applicant one opportunity to request reconsideration of any patent term adjustment determination. Pursuant to the mandate and authority in 35 U.S.C. § 154(b)(3), the USPTO promulgated 37 C.F.R. § 1.705, which provides that: (1) the notice of allowance will include notification of any patent term adjustment under 35 U.S.C.

include, pursuant to 37 CFR 1.705(d), setting a two-month period for filing a request for reconsideration of the revised patent term adjustment indicated in the patent.

Having considered petitioner's arguments, it is concluded that waiver of the two-month requirement is not warranted. The primary basis for requesting waiver set forth by petitioner is the recent decision in Wyeth v. Dudas, No. 07-1492 (D.D.C. Sept. 30, 2008). Specifically, petitioner argues the "court's holding that the Office's interpretation of the statute and regulations governing patent term adjustment is in error occurred more than two months after the present patent issued. As a result, petitioner could not have reasonably presented a request for reconsideration of the patent term adjustment within the time period specified under 37 C.F.R. § 1.705(d)."

Petitioner has not explained why it could not have filed a Request for Reconsideration of Patent Term Adjustment within two months of the date the above-referenced patent issued. Apparently, petitioner's argument is that the basis for the Request for Reconsideration of Patent Term Adjustment is the Wyeth decision, which was entered after the issuance of their patent.

The fact that any relief ultimately granted in Wyeth would benefit patentee had they timely filed a request for reconsideration does not make the situation extraordinary. Wyeth followed the procedure set forth in 37 CFR 1.705 for requesting reconsideration of the patent term adjustment determination. Then, pursuant to 35 U.S.C. 154(b)(4)(A), Wyeth timely filed a complaint in District Court seeking judicial review of the Office's decision. A Memorandum Opinion and Order, the Wyeth decision of September 30, 2008, directed to the parties involved was issued.

Petitioner chose not to challenge their revised patent term adjustment within the two-month period. Petitioner's argument that they could not have filed a Request for Reconsideration of Patent Term Adjustment within two months of the date the above-referenced patent issued because the basis for the Request for Reconsideration of Patent Term Adjustment is the Wyeth decision, which was occurred more than two months after the issuance of their patent, is not persuasive.

Petitioner could have filed a Request for Reconsideration of Patent Term Adjustment as Wyeth did. It is acknowledged that petitioner may have chosen not to file a request for reconsideration based on a conclusion that the Office's interpretation of 35 U.S.C. § 154(b)(2)(A) was correct. Nonetheless, the fact that the District Court has now issued an Opinion contrary to the Office's interpretation does not make the situation extraordinary. This is not unlike any other situation where a patentee (or applicant) challenges a final agency decision and the decision upon judicial

---

§ 154(b)(37 C.F.R. § 1.705(a)); (2) any request for reconsideration of the patent term adjustment indicated in the notice of allowance (except as provided in 37 C.F.R. § 1.705(d)) must be by way of an application for patent term adjustment filed no later than the payment of the issue fee and accompanied by (inter alia) the fee set forth in 37 C.F.R. § 1.18(e)(37 C.F.R. § 1.705(b)); and (3) if the patent indicates or should have indicated a revised patent term adjustment, any request for reconsideration of the patent term adjustment indicated in the patent must be filed within two months of the date the patent issued.

review could have had applicability to another patentee (or applicant) had they taken such action. In fact, many patentees may be in the same situation as petitioner with respect to the Wyeth decision. In addition, given that the law only allows 180 days for both the filing of a petition and for the Office's consideration of that petition, petitioner's unexplained delay in filing the petition weighs against them.

Petitioner simply fails to articulate how their failure to file a request for reconsideration of patent term adjustment within two months of the issue date of the patent was due to an extraordinary situation. Petitioner cannot rely on Wyeth's actions or the Wyeth decision to establish that their situation was extraordinary.

The contention that a decision is in error is a basis for a timely request for review of the decision but does not justify a delay in seeking review of such decision.

The Office provided notice that petitions under 37 CFR 1.182 and 1.183 or requests for certificate of corrections under 35 USC 354 and Sec. 1.323 or 35 U.S.C. 255 and Sec. 1.324 are not substitute *fora* to obtain reconsideration of a patent term adjustment determination indicated in a notice of allowance if applicant fails to submit a request for reconsideration within the time period specified in Sec. 1.705(b) or to obtain reconsideration of a patent term adjustment determination indicated in a patent if a patentee fails to submit a request for reconsideration within the time period specified in Sec. 1.705. See 69 Fed. Reg. 21704, 21707 (April, 22, 2004).

In view thereof, the petition under 37 CFR 1.183 for waiver of the two-month requirement of 37 CFR 1.705(d) is **dismissed**.

Accordingly, consideration now turns to the Request for Reconsideration of Patent Term Adjustment under 37 CFR 1.705(d).

## ON REQUEST FOR RECONSIDERATION OF PATENT TERM ADJUSTMENT UNDER 37 CFR 1.705(d)

This is a decision on the "APPLICATION FOR PATENT TERM ADJUSTMENT UNDER 37 C.F.R. § 1.705(d)," filed January 22, 2009. Therein, patentee requests correction of the patent term adjustment (PTA) indicated in the patent to 604 days.

On January 23, 2007, the above-identified application matured into U.S. Patent No. 7,166,283 with a revised patent term adjustment of 419 days. The instant request for reconsideration was filed more than two months after the issuance of the patent, on January 22, 2009.

No error in the printing of the patent has been shown. The patent term adjustment indicated on the patent reflects the Office's determination of patent term adjustment shown in the PAIR system for this application. 37 CFR 1.705(d) provides the sole avenue before the Office for requesting reconsideration of the Office's determination of patent term adjustment indicated in

the patent. Moreover, § 1.705(d) states that "any request for reconsideration of the patent term adjustment indicated in the patent must be filed within two months of the date the patent issued and must comply with the requirements of paragraphs (b)(1) and (b)(2) of this section." Since the request was not filed within two months of the issue date of the patent, the request is properly **dismissed as untimely filed**.

## CONCLUSION

It is determined that waiver of the requirement pursuant to 37 CFR 1.183 is not warranted. Accordingly, the request for reconsideration of the patent term adjustment under 37 CFR 1.705(d) filed more than two months after the issue date of the patent is dismissed as untimely filed.

Receipt of the fees required for the petition under 37 CFR 1.183 and the application for patent term adjustment is acknowledged.

The correspondence address indicated on the petitions differs from that contained in the official record. If patentee desires to receive future correspondence concerning this patent at an address other than that contained in the official record, the appropriate request for change of correspondence address must be promptly submitted. The instant decision is being dually mailed as a courtesy. However, all future correspondence concerning this patent will be directed to the correspondence address contained in the record until appropriate instruction to the contrary is received.

Telephone inquiries specific to this matter should be directed to the undersigned at (571) 272-3205.

Alesia M. Brown
Petitions Attorney
Office of Petitions

CC: JACK BRENNAN
Fish & Richardson P.C.
Citigroup Center
52nd Floor
153 East 53rd Street
New York, New York 10022-4611

UNITED STATES PATENT AND TRADEMARK OFFICE

UNITED STATES DEPARTMENT OF COMMERCE
United States Patent and Trademark Office
Address: COMMISSIONER FOR PATENTS
P.O. Box 1450
Alexandria, Virginia 22313-1450
www.uspto.gov

| APPL NO. | FILING OR 371 (c) DATE | ART UNIT | FIL FEE REC'D | ATTY.DOCKET NO | DRAWINGS | TOT CLMS | IND CLMS |
|---|---|---|---|---|---|---|---|
| 10/625,132 | 07/22/2003 | 2182 | 1398 | 501304.01 | 4 | 42 | 6 |

**CONFIRMATION NO. 8276**

**CORRECTED FILING RECEIPT**

*OC000000013983114*

Kimton N. Eng, Esq.
DORSEY & WHITNEY LLP
Suite 3400
1420 Fifth Avenue
Seattle, WA 98101

Date Mailed: 10/04/2004

Receipt is acknowledged of this regular Patent Application. It will be considered in its order and you will be notified as to the results of the examination. Be sure to provide the U.S. APPLICATION NUMBER, FILING DATE, NAME OF APPLICANT, and TITLE OF INVENTION when inquiring about this application. Fees transmitted by check or draft are subject to collection. Please verify the accuracy of the data presented on this receipt. **If an error is noted on this Filing Receipt, please write to the Office of Initial Patent Examination's Filing Receipt Corrections, facsimile number 703-746-9195. Please provide a copy of this Filing Receipt with the changes noted thereon. If you received a "Notice to File Missing Parts" for this application, please submit any corrections to this Filing Receipt with your reply to the Notice. When the USPTO processes the reply to the Notice, the USPTO will generate another Filing Receipt incorporating the requested corrections (if appropriate).**

**Applicant(s)**

Joseph M. Jeddeloh, Shoreview, MN;

**Power of Attorney:** The patent practitioners associated with Customer Number **27076**.

**Domestic Priority data as claimed by applicant**

**Foreign Applications**

**If Required, Foreign Filing License Granted:** 03/01/2004

**The number of your priority application, to be used for filing abroad under the Paris Convention is,**
**US10/625,132**

**Projected Publication Date:** 01/27/2005

**Non-Publication Request:** No

**Early Publication Request:** No

**Title**

Apparatus and method for direct memory access in a hub-based memory system

**Preliminary Class**

710

---

## LICENSE FOR FOREIGN FILING UNDER
## Title 35, United States Code, Section 184
## Title 37, Code of Federal Regulations, 5.11 & 5.15

**GRANTED**

The applicant has been granted a license under 35 U.S.C. 184, if the phrase "IF REQUIRED, FOREIGN FILING LICENSE GRANTED" followed by a date appears on this form. Such licenses are issued in all applications where the conditions for issuance of a license have been met, regardless of whether or not a license may be required as set forth in 37 CFR 5.15. The scope and limitations of this license are set forth in 37 CFR 5.15(a) unless an earlier license has been issued under 37 CFR 5.15(b). The license is subject to revocation upon written notification. The date indicated is the effective date of the license, unless an earlier license of similar scope has been granted under 37 CFR 5.13 or 5.14.

This license is to be retained by the licensee and may be used at any time on or after the effective date thereof unless it is revoked. This license is automatically transferred to any related applications(s) filed under 37 CFR 1.53(d). This license is not retroactive.

The grant of a license does not in any way lessen the responsibility of a licensee for the security of the subject matter as imposed by any Government contract or the provisions of existing laws relating to espionage and the national security or the export of technical data. Licensees should apprise themselves of current regulations especially with respect to certain countries, of other agencies, particularly the Office of Defense Trade Controls, Department of State (with respect to Arms, Munitions and Implements of War (22 CFR 121-128)); the Office of Export Administration, Department of Commerce (15 CFR 370.10 (j)); the Office of Foreign Assets Control, Department of Treasury (31 CFR Parts 500+) and the Department of Energy.

**NOT GRANTED**

No license under 35 U.S.C. 184 has been granted at this time, if the phrase "IF REQUIRED, FOREIGN FILING LICENSE GRANTED" DOES NOT appear on this form. Applicant may still petition for a license under 37 CFR 5.12, if a license is desired before the expiration of 6 months from the filing date of the application. If 6 months has lapsed from the filing date of this application and the licensee has not received any indication of a secrecy order under 35 U.S.C. 181, the licensee may foreign file the application pursuant to 37 CFR 5.15(b).

UNITED STATES PATENT AND TRADEMARK OFFICE

COMMISSIONER FOR PATENTS
UNITED STATES PATENT AND TRADEMARK OFFICE
P.O. BOX 1450
ALEXANDRIA, VA 22313-1450
www.uspto.gov

MAILED
FROM DIRECTORS OFFICE
AUG 2 0 2004
TECHNOLOGY CENTER 3600

MR. LOYAL M. HANSON
HANSON LAW CORPORATION
P.O. BOX 430
FALLBROOK, CA 92088-0430

| | | |
|---|---|---|
| In re application of<br>Charles W. Robinson<br>Application No. 10/625,135<br>Filed: July 23, 2003<br>For: POWERED WATERCRAFT | :<br>:<br>:<br>: | **DECISION ON PETITION TO MAKE SPECIAL (APPLICANT'S AGE)** |

This is a decision on the petition submitted on July 23, 2003 under 37 CFR 1.102 (c) to make the above-identified application special under the accelerated examination procedure set forth in MPEP 708.02, Section IV: Applicant's Age.

The petition is **GRANTED**.

An application may be accorded special status upon the filing of a petition providing evidence showing that the applicant is at least 65 years old. Such a showing may be provided by evidence such as a birth certificate or a statement from the applicant.

The evidence submitted with the petition is a declaration signed by Mr. Robinson and Driver License indicating that he is at least 65 years of age.

The examiner is directed (1) to make an interference search for possible interfering applications, (2) to promptly examine this application out of turn, and (3) if any interfering application is discovered, to examine such application simultaneously and state in the first official letter of such application that it is being taken out of turn because of a possible interference.

Best Available Copy

Petitioner is advised that this application will continue to be special, throughout its entire prosecution and pendency, including interference or appeal, if any, only if petitioner makes a prompt ***bona fide*** effort, in response to each Office action, to place the application in condition for allowance, even if it is necessary to conduct an interview with the examiner to accomplish this purpose.

**SUMMARY**: Petition to Make Special **GRANTED**.

Kenneth J. Dorner
Special Programs Examiner
Technology Center 3600
(703) 308-0866

KJD/slb: 8/11/04

UNITED STATES PATENT AND TRADEMARK OFFICE

Commissioner for Patents
United States Patent and Trademark Office
P.O. Box 1450
Alexandria, VA 22313-1450
www.uspto.gov

**FROMMER LAWRENCE & HAUG LLP**
**745 FIFTH AVENUE**
**NEW YORK NY 10151**

COPY MAILED
NOV 0 9 2006
OFFICE OF PETITIONS

| | | |
|---|---|---|
| In re Application of | : | |
| **KAWAHARA** | : | |
| Application No. 10/625,144 | : | DECISION GRANTING PETITION |
| Filed: July 23, 2003 | : | UNDER 37 CFR 1.313(c)(2) |
| Attorney Docket No. 450100-04654 | : | |

This is a decision on the petition under 37 CFR 1.313(c)(2), filed November 1, 2006, to withdraw the above-identified application from issue after payment of the issue fee.

The petition is **GRANTED**.

The above-identified application is withdrawn from issue for consideration of a submission under 37 CFR 1.114 (request for continued examination). *See* 37 CFR 1.313(c)(2).

***Petitioner is advised that the issue fee paid on October 13, 2006 cannot be refunded. If, however, this application is again allowed, petitioner may request that it be applied towards the issue fee required by the new Notice of Allowance.***[1]

Telephone inquiries should be directed to Monica A. Graves at (571) 272-7253.

This application is being referred to Technology Center AU 2114 for processing of the request for continued examination under 37 CFR 1.114 and for consideration of the concurrently filed Information Disclosure Statement.

Frances Hicks
Petitions Examiner
Office of Petitions

[1] *The request to apply the issue fee to the new Notice may be satisfied by completing and returning the new Part B – Fee(s) Transmittal Form (along with any balance due at the time of submission). Petitioner is advised that the Issue Fee Transmittal Form* ***must*** *be completed and timely submitted to avoid abandonment of the application.*

UNITED STATES PATENT AND TRADEMARK OFFICE

Commissioner for Patents
United States Patent and Trademark Office
P.O. Box 1450
Alexandria, VA 22313-1450
www.uspto.gov

**TOWNSEND AND TOWNSEND AND CREW, LLP**
**TWO EMBARCADERO CENTER**
**EIGHTH FLOOR**
**SAN FRANCISCO, CA 94111-3834**

COPY MAILED

MAR 1 0 2009

OFFICE OF PETITIONS

| | | |
|---|---|---|
| In re Application of | : | |
| Stephen W. Boyd | : | |
| Application No. 10/625,145 | : | DECISION ON PETITION |
| Filed: July 22, 2003 | : | TO WITHDRAW |
| Attorney Docket No. FXH1006USC1 | : | FROM RECORD |
| | : | |

This is a decision on the Request to Withdraw as attorney or agent of record under 37 C.F.R. § 1.36(b), filed October 14, 2008.

The request is **NOT APPROVED** because it is moot.

A review of the file record indicates that the power of attorney to Townsend and Townsend and Crew, LLP has been revoked by the assignee of the patent application on December 23, 2008. Accordingly, the request to withdraw under 37 C.F.R. § 1.36(b) is moot.

All future communications from the Office will continue to be directed to the below-listed address until otherwise notified by applicant.

Telephone inquires concerning this decision should be directed to Terri Williams at 571-272-2991.

Terri Williams
Petitions Examiner
Office of Petitions

cc: **Popovich, Wiles & O'Connell, PA**
**650 Third Avenue South**
**Suite 600**
**Minneapolis, MN 55402**

UNITED STATES PATENT AND TRADEMARK OFFICE

Commissioner for Patents
United States Patent and Trademark Office
P.O. Box 1450
Alexandria, VA 22313-1450
www.uspto.gov

RUPERT B HURLEY JR
SEALED AIR CORPORATION
PO BOX 464
DUNCAN SC 29334

COPY MAILED
AUG 17 2006
OFFICE OF PETITIONS

| | | |
|---|---|---|
| In re Application of | : | |
| Longo, et al. | : | |
| Application No. 10/625,184 | : | ON PETITION |
| Filed: July 23, 2003 | : | |
| Attorney Docket No. D-43481-01 | : | |

This is a decision on the petition to revive an abandoned application under 37 CFR 1.137(b), filed February 2, 2006

The petition under 37 CFR 1.137(b) is **GRANTED**.

The above-identified application became abandoned for failure to timely file a response to the non-final Office action mailed April 26, 2005, which set a shortened statutory period for reply of three (3) months. No extensions of time under 37 CFR 1.136(a) were purchased. Accordingly, no reply having received, the application became abandoned on July 27, 2005. A Notice of Abandonment was mailed on October 31, 2005.

With the instant petition, petitioner paid the petition fee, submitted the required reply in the form of an Amendment, and made the proper statement of unintentional delay.

The matter is being forwarded to Group Art Unit 1772 for consideration of the Amendment filed February 2, 2006.

Telephone inquiries related to this decision should be directed to the undersigned at (571)272-3207.

Cliff Congo
Petitions Attorney
Office of Petitions

UNITED STATES PATENT AND TRADEMARK OFFICE

Commissioner for Patents
United States Patent and Trademark Office
P.O. Box 1450
Alexandria, VA 22313-1450
www.uspto.gov

BINGHAM MCCUTCHEN, LLP
SUITE 1800
THREE EMBARCADERO
SAN FRANCISCO CA 94111-4067

COPY MAILED

MAY 2 1 2004

OFFICE OF PETITIONS

ON PETITION

In re Application of
Katie L. Krueger
Application No. 10/625,194
Deposited: July 23, 2003
Attorney Docket Number: 2024729-7014395001

This is a decision on the petition under 37 CFR 1.182 filed December 11, 2003, to Change the Name of the Inventor Due to Marriage.

The petition is **GRANTED**.

Petitioner has requested that the inventor formerly known as Katie L. Messing be listed as Katie L. Krueger. The petition fee and a declaration signed with both names with an explanation of how the change was effected, marriage, has been submitted in compliance with 37 CFR 1.182.

In view of the instant request, the following inventor name data will be changed.

Inventor 1) Katie L. Krueger

Deposit account no. 50-2518 will be charged in the amount of $130.00 for the petition.

The application is being forwarded to the Office of Initial Patent Examination for further pre-examination processing.

Telephone inquiries concerning this matter should be directed to the undesigned Petitions Attorney at (703) 305-4497.

Patricia Faison-Ball

Patricia Faison-Ball
Senior Petitions Attorney
Office of Petitions

UNITED STATES PATENT AND TRADEMARK OFFICE

Commissioner for Patents
United States Patent and Trademark Office
P.O. Box 1450
Alexandria, VA 22313-1450
www.uspto.gov

**CHRISTENSEN, O'CONNOR, JOHNSON, KINDNESS, PLLC**
**1420 FIFTH AVENUE**
**SUITE 2800**
**SEATTLE WA 98101-2347**

COPY MAILED

AUG 0 8 2008

| | | |
|---|---|---|
| In re Application of | : | |
| **BURKE,** Dennis A. | : | |
| Application No. 10/625,198 | : | DECISION ON PETITION |
| Filed: July 22, 2003 | : | TO WITHDRAW |
| Attorney Docket No. **WEEI121484** | : | FROM RECORD |
| | : | |

This is a decision on the Request to Withdraw as attorney or agent of record under 37 C.F.R. § 1.36(b), filed July 11, 2008.

The request is **APPROVED**.

A grantable request to withdraw as attorney/agent of record must be signed by every attorney/agent seeking to withdraw or contain a clear indication that one attorney is signing on behalf of another/others. The Office requires the practitioner(s) requesting withdrawal to certify that he, she, or they have: (1) given reasonable notice to the client, prior to the expiration of the response period, that the practitioner(s) intends to withdraw from employment; (2) delivered to the client or a duly authorized representative of the client all papers and property (including funds) to which the client is entitled; and (3) notified the client of any responses that may be due and the time frame within which the client must respond, pursuant 37 CFR 10.40(c).

The request was signed by Jeffrey M. Sakoi on behalf of all attorneys of record who are associated with customer No. 26389. All attorneys/agents associated have been withdrawn. Applicant is reminded that there is no attorney of record at this time.

All future correspondence will be directed to the first named inventor Dennis A. Burke at the address indicated below.

Telephone inquiries concerning this decision should be directed to Michelle R. Eason at 571-272-4231.

Michelle R. Eason
Paralegal Specialist
Office of Petitions

cc: **DENNIS A. BURKE**
**6007 HILL ROAD NORTHEAST**
**OLYMPIA, WASHINGTON 98516**

UNITED STATES PATENT AND TRADEMARK OFFICE

Commissioner for Patents
United States Patent and Trademark Office
P.O. Box 1450
Alexandria, VA 22313-1450
www.uspto.gov

C/O STEPHEN A. SAXE
ALEXION PHARMACEUTICALS, INC.
352 KNOTTER DRIVE
CHESHIRE CT 06410

**COPY MAILED**

OCT 06 2004

**OFFICE OF PETITIONS**

In re Application of
Carl Gustav Figdor et al.
Application No. 10/625,202
Filed: July 23, 2004
Attorney Docket No 89DIV1

: DECISION GRANTING PETITION

This is a decision on the petition filed August 25, 2004, in response to the "Notice to File Corrected Application Papers" mailed June 28, 2004, which is treated under 37 CFR 1.182.

The instant application was filed July 23, 2004 and a filing date was accorded. However, the Notice also indicated that Figure 8 as described in the specification appeared to have been omitted.

Petitioner asserts that Figure 8 was among the papers filed on July 23, 2004, and submits, *inter alia*, a "legible" postcard receipt in evidence thereof. The postcard receipt, identifies the application and acknowledges, inter alia, that the application totaled 14 sheets of drawings and bears a United States Patent and Trademark Office date-stamp of July 23, 2004. Further, the postcard receipt lacks any notation of non-receipt of any item listed.

In view of the foregoing, the petition is **GRANTED.**

Given the basis for granting the petition, the petition fee in the amount of $130.00 will be credited back to deposit account no. 01-0483.

This application is being forwarded to the Office of Initial Patent Examination (OIPE) for further processing, using the application papers received in the Office on July 23, 2004 and Figure 8 found on sheet 13/14, submitted on petition August 25, 2004.

Telephone inquiries regarding this decision should be directed to the undersigned Petitions Attorney at (571) 272-3212.

Patricia Faison-Ball

Patricia Faison-Ball
Senior Petitions Attorney
Office of Petitions

UNITED STATES PATENT AND TRADEMARK OFFICE

Commissioner for Patents
United States Patent and Trademark Office
P.O. Box 1450
Alexandria, VA 22313-1450
www.uspto.gov

ALEXION PHARMACEUTICALS, INC.
352 KNOTTER DRIVE
CHESHIRE CT 06410

**COPY MAILED**

JUL 07 2005

**OFFICE OF PETITIONS**

In re Application of
Carl Gustav Figdor et al.
Application No. 10/625,204
Filed: July 23, 2003
Attorney Docket No: 89 DIV-2

ON PETITION

This is a decision on the petition filed under 37 CFR 1.182, on June 10, 2005, in response to the Notice To File Corrected Application Papers mailed May 13, 2005.

A Notice To File Corrected Application Papers mailed May 13, 2005 indicated that the application had been accorded a filing date of July 23, 20032004 but that Figure 8 described in the specification appeared to have been omitted.

Petitioner asserts that the paper containing Figure 8 was among the papers filed on July 23, 2003, and with the petition, submits, *inter alia*, a "legible" postcard receipt in evidence thereof. The postcard receipt, identifies the application and acknowledges, inter alia, that the application included fourteen (14) sheets of drawings and bears a United States Patent and Trademark Office date-stamp of July 23, 2003. However, only thirteen (13) sheets of drawing figures is of record and while the postcard did not specifically itemize the number of Figures, it is obvious that Figure 8 was on sheet 13 of 14. Additionally, the postcard receipt lacks any notation of non-receipt of any item listed. In view thereof, the petition is **GRANTED.**

The "Notice" was improperly mailed and is withdrawn.

Given the basis for granting the petition, the petition fee in the amount of $400.00 will be credited back to deposit account no. 01-0483.

This matter is being referred to the Office of Initial Patent Examination (OIPE) for further processing, using the application papers received in the Office on July 23, 2003 and the one drawing sheet containing Figure 8, submitted on petition June 10, 2005.

Telephone inquiries regarding this decision should be directed to the undersigned Petitions Attorney at (571) 272-3212.

Patricia Faison-Ball

Patricia Faison-Ball
Senior Petitions Attorney
Office of Petitions

UNITED STATES PATENT AND TRADEMARK OFFICE

Commissioner for Patents
United States Patent and Trademark Office
P.O. Box 1450
Alexandria, VA 22313-1450
www.uspto.gov

Paper No.

RADER, FISHMAN & GRAUER PLLC
39533 WOODWARD AVENUE
SUITE 140
BLOOMFIELD HILLS, MI 48304-0610

COPY MAILED

FEB 25 2005

OFFICE OF PETITIONS

In re Application of :
Michael Farmer and Xunchang Chen :
Application No. 10/625,208 :
Filed: July 23, 2003 :
Attorney Docket No. 65858-0021 :
Title: SYSTEM OR METHOD FOR :
CLASSIFYING IMAGES :

DECISION ON PETITION

This is in response to the PETITION FOR REVIVAL OF AN APPLICATION FOR PATENT ABANDONED UNINTENTIONALLY UNDER 37 CFR 1.137(b) and PETITION PURSUANT TO 37 CFR 1.47 INVOLVING THE REFUSAL OF CO-INVENTORS TO EXECUTE THE POWER OF ATTORNEY both filed December 21, 2004.

The petition under 1.47 is **DISMISSED**.

Any request for reconsideration of this decision must be submitted within **TWO (2) MONTHS** from the mail date of this decision. Extensions of time under 37 CFR 1.136(a) are permitted. The reconsideration request should include a cover letter entitled "Renewed Petition under 37 CFR 1.137(b) and 1.47." As to meeting the requirements of § 1.47(b), the petition should only address the deficiencies noted below, except that the reply may include an oath or declaration executed by the non-signing inventors.

A decision on the petition under 1.137(b) is being held in abeyance pending satisfaction of the requirements under 1.47.

The above-identified application became abandoned for failure to reply to the Notice to File Missing Parts of Application mailed December 1, 2003. The Notice set a period for reply of two (2) months from the mail date of the Notice, with extensions of time obtainable under 37 CFR 1.136(a). No reply having been timely received and no extensions of time obtained, the above-identified application became abandoned on February 2, 2004. A courtesy Notice of Abandonment was mailed on October 21, 2004.

In response, the instant petition was filed. The petition fee has been charged to Deposit Account No. 18-0013, as authorized. Petitioner asks to make application as agent for and on behalf of Eaton Corporation who employed inventors Farmer and Chen at the time of the filing of the application. Petitioner asserts that diligent effort have been made to provide the non-signing inventors with the necessary documents. The petition includes an unexecuted declaration, the late surcharge, and an unexecuted assignment.

A grantable petition pursuant to 37 CFR 1.137(b) must be accompanied by (1) the reply required to the outstanding Office action or notice, unless previously filed; (2) the petition fee as set forth in 37 CFR 1.17(m); (3) a statement that the entire delay in filing the required reply from the due date for the reply until the filing of a grantable petition pursuant to 37 CFR 1.137(b) was unintentional. The Commissioner may require additional information where there is a question whether the delay was unintentional; and (4) any terminal disclaimer (and fee as set forth in § 1.20(d)) required pursuant to 37 CFR 1.137(d).

Petitioner seeks to satisfy § 1.137(b) by way of submission of a declaration accepted pursuant to 37 CFR 1.47(b).

37 CFR 1.47(b) provides that:

> Whenever all of the inventors refuse to execute an application for patent, or cannot be found or reached after diligent effort, a person to whom an inventor has assigned or agreed in writing to assign the invention, or who otherwise shows sufficient proprietary interest in the matter justifying such action, may make application for patent on behalf of and as agent for all the inventors. The oath or declaration in such an application must be accompanied by a petition including proof of the pertinent facts, a showing that such action is necessary to preserve the rights of the parties or to prevent irreparable damage, the fee set forth in §1.17(h), and the last known address of

all of the inventors. An inventor may subsequently join in the application by filing an oath or declaration complying with §1.63.

Accordingly, a grantable petition under 37 CFR §1.47(b) requires: (1) an acceptable oath or declaration in compliance with 37 C.F.R. §1.63 and 1.64 or 1.175; (2) the rule 47 applicant must state his or her relationship to the inventor as required by 37 C.F.R. §1.64; (3) proof that the non-signing inventor cannot be found or reached after diligent effort, or refuses to sign the oath or declaration after having been presented with the application papers (specification, claims and drawings); (4) the petition fee; (5) a statement of the last known address of the non-signing inventor; (6) that rule 47 applicant make out a prima facie case (i) that the invention has been assigned to him or her or (ii) that the inventor has agreed in writing to assign the invention to him or her or (iii) otherwise demonstrate a proprietary interest in the subject matter of the invention; and (7) rule 47 applicant must prove that the filing of the application is necessary (i) to preserve the rights of the parties or (ii) to prevent irreparable damage. See MPEP §409.03(g).

See 35 U.S.C. §118; 37 C.F.R. §1.47; §§409.03 and 605 of the Manual of Patent Examining Procedure (8th ed)(Rev. 2, May 2004)(MPEP).

The petition and declaration have been reviewed and found to satisfy requirements (3)and(4) above. Petitioner has provided evidence to show that the application papers were presented to the inventors; however, by their conduct in not responding, they have refused to join in the application. The petition fee has been charged to Deposit Account No. 18-0013, as authorized.

However, the petition does not satisfy requirements (1), (2), (5), (6) and (7) above:

As to requirements (1) and (2), petitioner has submitted an un-executed declaration. Further, in addition to not being signed, the declaration does not contemplate execution by rule 47(b) applicant on behalf of the non-signing inventors.

Petitioner is advised that the 37 CFR 1.47(b) applicant must make the oath required by 37 CFR 1.63 and 1.64 or 1.175. Where a corporation is the 37 CFR 1.47(b) applicant, an officer (President, Vice-President, Secretary, Treasurer, or Chief Executive Officer) thereof should normally sign the necessary oath or declaration. A corporation may authorize any person,

including an attorney or agent registered to practice before the U.S. Patent and Trademark Office, to sign the application oath or declaration on its behalf. Where an oath or declaration is signed by a registered attorney or agent on behalf of a corporation, either proof of the attorney's or agent's authority in the form of a statement signed by an appropriate corporate officer must be submitted, or the attorney or agent may simply state that he or she is authorized to sign on behalf of the corporation. Where the oath or declaration is being signed on behalf of an assignee, see MPEP §324.

As to requirement (5), the petition does not include a statement of the last known addresses of the non-signing inventors. The declaration includes addresses, but will not be relied on as it is unacceptable (and unexecuted).

As to requirement (6), rule 47(b) applicant states that the inventors were employees of rule 47(b) applicant. However, in support of a proprietary interest, petitioners only submit an unexecuted assignment. Thus, it cannot be concluded that rule 47 applicant has made out a *prima facie* case (i) that the invention has been assigned to him or her or (ii) that the inventor has agreed in writing to assign the invention to him or her or (iii) otherwise demonstrate a proprietary interest in the subject matter of the invention. Petitioner's attention is directed to MPEP 409.03(f) for guidance on showing proof of proprietary interest.

As to requirement (7), petitioner has not addressed this requirement. The petition does not include a statement that a filing date is necessary to preserve the rights of the party or to prevent irreparable damage. See MPEP §409.03(g).

Further correspondence with respect to this matter should be addressed as follows:

By mail: Mail Stop Petition
Commissioner for Patents
P.O. Box 1450
Alexandria, VA 22313-1450

By fax: (703) 872-9306
ATTN: Office of Petitions

By hand: Customer Service Window
Randolph Building
401 Dulany Street
Alexandria, VA 22314

Telephone inquiries related to this decision should be directed to the undersigned at 571-272-3219.

Nancy Johnson
Senior Petitions Attorney
Office of Petitions

UNITED STATES PATENT AND TRADEMARK OFFICE

Commissioner for Patents
United States Patent and Trademark Office
P.O. Box 1450
Alexandria, VA 22313-1450
www.uspto.gov

Paper No.

RADER, FISHMAN & GRAUER PLLC
39533 WOODWARD AVENUE
SUITE 140
BLOOMFIELD HILLS, MI 48304-0610

**COPY MAILED**

JUL 29 2005

**OFFICE OF PETITIONS**

| | | |
|---|---|---|
| In re Application of | : | |
| Michael Farmer and Xunchang Chen | : | |
| Application No. 10/625,208 | : | DECISION GRANTING |
| Filed: July 23, 2003 | : | PETITION TO REVIVE |
| Attorney Docket No. 65858-0021 | : | and |
| Title: SYSTEM OR METHOD FOR | : | DECISION ACCORDING |
| CLASSIFYING IMAGES | : | STATUS UNDER § 1.47(a) |

This is in response to the RENEWED PETITION UNDER 37 CFR 1.137(b) AND 1.47 filed April 22, 2005. This also responds to the PETITION FOR REVIVAL OF AN APPLICATION FOR PATENT ABANDONED UNINTENTIONALLY UNDER 37 CFR 1.137(b) filed December 21, 2004.

The petition under 1.137(b) is **GRANTED**.

The petition under 1.47(a) is **GRANTED**.

The above-identified application became abandoned for failure to reply to the Notice to File Missing Parts of Application mailed December 1, 2003. The Notice set a period for reply of two (2) months from the mail date of the Notice, with extensions of time obtainable under 37 CFR 1.136(a). No reply having been timely received and no extensions of time obtained, the above-identified application became abandoned on February 2, 2004. A courtesy Notice of Abandonment was mailed on October 21, 2004.

By decision mailed February 25, 2005, a prior petition under § 1.47(b) was dismissed. A decision on the petition under

§ 1.137(b) filed concurrently was held in abeyance. On instant renewed petition, rule 47 applicant has sought reconsideration under the requirements of § 1.47(a), rather than § 1.47(b). Petitioner has submitted a declaration executed by previously non-signing inventor Farmer on behalf of himself and on behalf of non-signing inventor Chen.

A grantable petition pursuant to 37 CFR 1.137(b) must be accompanied by (1) the reply required to the outstanding Office action or notice, unless previously filed; (2) the petition fee as set forth in 37 CFR 1.17(m); (3) a statement that the entire delay in filing the required reply from the due date for the reply until the filing of a grantable petition pursuant to 37 CFR 1.137(b) was unintentional. The Director may require additional information where there is a question whether the delay was unintentional; and (4) any terminal disclaimer (and fee as set forth in § 1.20(d)) required pursuant to 37 CFR 1.137(d).

The petition under § 1.137(b) as filed on December 21, 2004 included payment of the petition fee and a statement of unintentional delay. Petitioner now seeks to satisfy § 1.137(b) by way of submission of a declaration accepted pursuant to 37 CFR 1.47(a). Petitioner has met those requirements. Petitioner previously provided evidence to show that the application papers were presented to inventor Chen; however, by his/her conduct in not responding, he/she has refused to join in the application. The petition fee was charged to Deposit Account No. 18-0013, as authorized. The last known address of inventor Chen is deemed to be as set forth on the declaration.

The declaration filed April 22, 2005, and the petition have been reviewed and now found in compliance with 37 C.F.R. §1.47(a).

<u>This application is hereby accorded Rule 1.47(a) status</u>.

As provided in new Rule 1.47(c), this Office will forward notice of this application's filing to the non-signing inventor at the address given in the petition. Notice of the filing of this application will also be published in the Official Gazette.

Having thereby met all requirements of § 1.137(b), the petition to revive is granted.

The Office of Initial Patent Examination (OIPE) has been advised of this decision. The application is, thereby, forwarded to OIPE for completion of pre-examination processing.

Telephone inquiries related to this decision should be directed to the undersigned at 571-272-3219.

Nancy Johnson
Senior Petitions Attorney
Office of Petitions

UNITED STATES PATENT AND TRADEMARK OFFICE

Commissioner for Patents
United States Patent and Trademark Office
P.O. Box 1450
Alexandria, VA 22313-1450
www.uspto.gov

**ATTN: BARBARA A. WRIGLEY**
**OPPENHEIMER WOLFF & DONNELLY LLP**
**45 SOUTH SEVENTH STREET**
**SUITE 3300**
**MINNEAPOLIS, MN 55402**

**COPY MAILED**

DEC 2 2 2004

**OFFICE OF PETITIONS**

| | | |
|---|---|---|
| In re Application of | : | |
| Habib et al. | : | |
| Application No. 10/625,232 | : | ON PETITION |
| Filed: July 22, 2003 | : | |
| Attorney Docket No. 380048-97 | : | |

This is a decision on the petition under 37 C.F.R. § 1.137(b), filed December 13, 2004, to revive the above-identified application.

The petition is **GRANTED.**

The above-identified application became abandoned for failure to reply in a timely manner to the Notice to File Corrected Application Papers (Notice) mailed December 2, 2003. The Notice set a period for reply of two (2) months from the mail date of the Notice. No extensions of time under the provisions of 37 CFR 1.136(a) were obtained. Accordingly, the above-identified application became abandoned on February 3, 2004. A Notice of Abandonment was mailed on October 21, 2004.

Petitioner has met the requirements to revive the above-identified application pursuant to 37 CFR 1.137(b).

This matter is being referred to the Office of Initial Patent Examination for further processing.

Telephone inquiries regarding this decision should be directed to the undersigned at (571) 272-3282.

Liana Chase
Petitions Examiner
Office of Petitions
Office of the Deputy Commissioner
for Patent Examination Policy

UNITED STATES PATENT AND TRADEMARK OFFICE

Commissioner for Patents
United States Patent and Trademark Office
P.O. Box 1450
Alexandria, VA 22313-1450
www.uspto.gov

Paper No. 072804

HARNESS, DICKEY & PIERCE, P.L.C.
P.O. Box 828
Bloomfield Hills, MI 48303

AUG 24 2004

In re Application of:
YOKOGAWA *et al.*
Serial No.: 10/625,256
Filed: July 23, 2003
Attorney Docket No.: **5077-73COA**

DECISION ON PETITION
TO MAKE SPECIAL

This is a decision on the petition under 37 C.F.R. § 1.102, filed July 23, 2003, to make the above-identified application special.

Petitioner requests that the above-identified application be made special under the accelerated examination procedure set forth in the Manual of Patent Examining Procedure (M.P.E.P.), Section 708.02, Item VIII: Accelerated Examination.

A grantable petition to make special under 37 C.F.R. § 1.102 and in accordance with M.P.E.P., Section 708.02, Item VIII, must be accompanied by (a) the fee set forth in 37 C.F.R. § 1.17(i), (b) a statement that all claims are directed a single invention or an offer to make an oral election without traverse should the Patent and Trademark Office hold that the claims are not directed to a single invention, (c) a statement that a pre-examination search has been made by the inventor, attorney, agent, professional searcher, etc., and a listing of the field of search by class and subclass, (d) one copy of each of the references deemed most closely related to the subject matter encompassed by the claims, and (e) a detailed description of the submitted references and discussions pointing out how the claimed subject matter is distinguishable over these references.

The petition satisfies the above requirements. Accordingly, the petition is **GRANTED**.

If the examiner can make this application special without prejudice to any possible interfering applications, and he/she should make a rigid search for such, he/she is authorized to do so for the next action. Should the application be rejected, the application will not be considered special for the subsequent action unless the applicant promptly makes a bona fide effort to place the application in condition for allowance, even if it is necessary to have an interview with the examiner to accomplish this purpose.

If the examiner finds any interfering application for the same subject matter, he/she should consider such application simultaneously with this application and should state in the official letter of such application that she/he is taking it out of its turn because of possible interference.

Should an appeal be taken in this application or should this application becomes involved in an interference, consideration of the appeal and the interference will be expedited by all Patent and Trademark Office officials concerned, contingent likewise upon diligent prosecution by the applicant.

After allowance, this application will be given priority for printing. See M.P.E.P. § 1309.

Inquiries regarding this decision should be directed to Clayton E. LaBalle at (571) 272-1594.

Clayton E. LaBalle, Special Programs Examiner
Technology Center 2800
Semiconductors, Electrical and Optical
Systems and Components

## SPE RESPONSE FOR CERTIFICATE OF CORRECTION

**Paper No**.:20091208

**DATE** : May 14, 2009

**TO SPE OF** : ART UNIT 2627

**SUBJECT** : Request for Certificate of Correction on Patent No.: 6,987,648

A response is requested with respect to the accompanying request for a certificate of correction.

Please complete this form and return with file, within **7** days to:
**Certificates of Correction Branch - ST (South Tower) 9A22**
Palm location **7590** - Tel. No. (703) 305-8309

With respect to the change(s) requested, correcting Office and/or Applicant's errors, should the patent read as shown in the certificate of correction? No new matter should be introduced, nor should the scope or meaning of the claims be changed.

**Thank You For Your Assistance** **Certificates of Correction Branch**

**The request for issuing the above-identified correction(s) is hereby:**

Note your decision on the appropriated box.

☒ **Approved** All changes apply.

☐ **Approved in Part** Specify below which changes **do not** apply.

☐ **Denied** State the reasons for denial below.

**Comments:**

/WAYNE R YOUNG/
Supervisory Patent Examiner.Art Unit 2627

UNITED STATES PATENT AND TRADEMARK OFFICE

COMMISSIONER FOR PATENTS
UNITED STATES PATENT AND TRADEMARK OFFICE
P.O. BOX 1450
ALEXANDRIA, VA 22313-1450
www.uspto.gov

3M INNOVATIVE PROPERTIES COMPANY
PO BOX 33427
ST. PAUL, MN 55133-3427

COPY MAILED
JUL 26 2006
OFFICE OF PETITIONS

In re Application of :
Hobbs et al. :
Application No. 10/625,271 :
Filed: July 23, 2003 :
Attorney Docket No. 58017US002 :

This is a decision in response to the petition under 37 CFR 1.137(b), filed April 17, 2006, to revive the above-identified application.

This Petition is hereby **granted**.

The above-identified application became abandoned for failure to reply in a timely manner to the non-final Office action, mailed June 6, 2005. The Office action set a three (3) month period for reply, and provided for extensions of time under 37 CFR 1.136(a). No reply having been received, the application became abandoned on September 7, 2005. A Notice of Abandonment was mailed on December 21, 2005.

With the instant petition, Petitioner has filed an Amendment in response to the Office action. Accordingly, the petition is granted.

This application is being forwarded to Technology Center Art Unit 1616 for processing of the Amendment in due course.

Telephone inquiries concerning this matter should be directed to the undersigned at (571) 272-3232.

Derek L. Woods
Attorney
Office of Petitions

UNITED STATES PATENT AND TRADEMARK OFFICE

Commissioner for Patents
United States Patent and Trademark Office
P.O. Box 1450
Alexandria, VA 22313-1450
www.uspto.gov

**VIERRA MAGEN MARCUS HARMON & DENIRO**
**685 MARKET STREET, SUITE 540**
**SAN FRANCISCO CA 94105**

COPY MAILED

DEC 13 2004

OFFICE OF PETITIONS

In re Application of :
Richard E. Perego et al :
Application No. 10/625,276 :
Filed: July 23, 2003 :
Attorney Docket No. RAMB-01049US1 :

ON PETITION

This is a decision on the petition, filed December 10, 2004, under 37 CFR 1.313(c)(2) to withdraw the above-identified application from issue after payment of the issue fee.

The petition is **GRANTED**.

The above-identified application is withdrawn from issue for consideration of a submission under 37 CFR 1.114 (request for continued examination). See 37 CFR 1.313(c)(2).

**Petitioner is advised that the issue fee paid on November 8, 2004 in the above-identified application cannot be refunded. If, however, the above-identified application is again allowed, petitioner may request that it be applied towards the issue fee required by the new Notice of Allowance.**[1]

Telephone inquiries should be directed to the undersigned at (571) 272-3208.

The examiner of Technology Center AU 2188 will consider the request for continued examination under 37 CFR 1.114.

Karen Creasy

Karen Creasy
Petitions Examiner
Office of Petitions
Office of the Deputy Commissioner
for Patent Examination Policy

---

[1] The request to apply the issue fee to the new Notice may be satisfied by completing and returning the new Issue Fee Transmittal Form PTOL-85(b), which includes the following language thereon: "Commissioner for Patents is requested to apply the Issue Fee and Publication Fee (if any) or re-apply any previously paid issue fee to the application identified above." Petitioner is advised that, whether a fee is indicated as being due or not, the Issue Fee Transmittal Form **must** be completed and timely submitted to avoid abandonment. Note the language in bold text on the first page of the Notice of Allowance and Fee(s) Due (PTOL-85).

UNITED STATES PATENT AND TRADEMARK OFFICE

COMMISSIONER FOR PATENTS
UNITED STATES PATENT AND TRADEMARK OFFICE
P.O. BOX 1450
ALEXANDRIA, VA 22313-1450
www.uspto.gov

Paper No. _____

Date : December 13, 2004

TO : Director, Office of Patent Publication

FROM : Office of the Deputy Commissioner
for Patent Examination Policy

SUBJECT : Withdrawal from Issue of Application No. 10/625,276

Applicant(s) :Richard E. Perego et al
Application No. :10/625,276
Filed :July 23, 2003

The above-identified application has been assigned Patent No. 6,832,284 and an issue date of December 14, 2004.

It is hereby directed that this application be withdrawn from issue at the request of the applicants.

The following erratum should be published in the Official Gazette if the above-identified application is published in the OG of December 14, 2004:

"All reference to Patent No. 6,832,284 to Richard E. Perego et al of California for INTEGRATED CIRCUIT BUFFER DEVICE appearing in the Official Gazette of December 14, 2004 should be deleted since no patent was granted."

Karen Creasy

Karen Creasy
Petitions Examiner
Office of Petitions
Office of the Deputy Commissioner
for Patent Examination Policy

cc: Paul Harrison, Crystal Park 3-441 (FAX-306-2737)
Deneise Boyd, Crystal Park 2, Suite 1100 (FAX-308-5413)
Mary Louise McAskill, Crystal Park 3-910 (FAX 305-4372)
Niomi Farmer, Crystal Park 3-910 (FAX-305-4372)
Mary E. Johnson (Cookie), P/OCS, CM1-6D07
Duane Davis (CDS), CM1-6A07
Tamara Greene, Crystal Park 3-908

UNITED STATES PATENT AND TRADEMARK OFFICE

Commissioner for Patents
United States Patent and Trademark Office
P.O. Box 1450
Alexandria, VA 22313-1450
www.uspto.gov

**VIERRA MAGEN MARCUS HARMON & DENIRO**
**685 MARKET STREET, SUITE 540**
**SAN FRANCISCO CA 94105**

COPY MAILED

AUG 1 1 2005

OFFICE OF PETITIONS

In re Application of :
Richard E. Perego et al :
Application No. 10/625,276 :
Filed: July 23, 2003 :
Attorney Docket No. RAMB-01049US1 :

ON PETITION

This is a decision on the petition, filed August 10, 2005, under 37 CFR 1.313(c)(2) to withdraw the above-identified application from issue after payment of the issue fee.

The petition is **GRANTED**.

The above-identified application is withdrawn from issue for consideration of a submission under 37 CFR 1.114 (request for continued examination). See 37 CFR 1.313(c)(2).

**Petitioner is advised that the issue fee paid on July 11, 2005 in the above-identified application cannot be refunded. If, however, the above-identified application is again allowed, petitioner may request that it be applied towards the issue fee required by the new Notice of Allowance.**[1]

Telephone inquiries should be directed to the undersigned at (571) 272-3208.

The examiner of Technology Center AU 2189 will consider the request for continued examination under 37 CFR 1.114.

Karen Creasy

Karen Creasy
Petitions Examiner
Office of Petitions
Office of the Deputy Commissioner
for Patent Examination Policy

---

[1] The request to apply the issue fee to the new Notice may be satisfied by completing and returning the new Issue Fee Transmittal Form PTOL-85(b), which includes the following language thereon: "Commissioner for Patents is requested to apply the Issue Fee and Publication Fee (if any) or re-apply any previously paid issue fee to the application identified above." Petitioner is advised that, whether a fee is indicated as being due or not, the Issue Fee Transmittal Form **must** be completed and timely submitted to avoid abandonment. Note the language in bold text on the first page of the Notice of Allowance and Fee(s) Due (PTOL-85).

UNITED STATES PATENT AND TRADEMARK OFFICE

Commissioner for Patents
United States Patent and Trademark Office
P.O. Box 1450
Alexandria, VA 22313-1450
www.uspto.gov

**VIERRA MAGEN MARCUS HARMON & DENIRO**
**685 MARKET STREET, SUITE 540**
**SAN FRANCISCO CA 94105**

**COPY MAILED**

OCT 0 6 2005

**OFFICE OF PETITIONS**

| | | |
|---|---|---|
| In re Application of | : | |
| Richard E. Perego et al | : | |
| Application No. 10/625,276 | : | ON PETITION |
| Filed: July 23, 2003 | : | |
| Attorney Docket No. RAMB-01049US1 | : | |

This is a decision on the petition under 37 CFR 1.313(c)(2), filed September 30, 2005 requesting withdrawal of the above-identified application from issue.

The petition is **dismissed** as moot for the reasons stated below.

A review of the file record discloses that a Notice of Allowance was mailed on August 23, 2005, with the issue fee being due on or before November 23, 2005. The issue fee in this case has not been paid.

37 CFR 1.313(c)(2) provides for withdrawal of an application from issue after payment of the issue fee. In the instant case, as noted above, the issue fee in reply to the Notice of Allowance of August 23, 2005, has not been received. Therefore, the filing of a petition to withdraw this application from issue is unnecessary at this time. The mere filing of an RCE and submission will effectively withdraw an application from issue prior to payment of the issue fee. In view thereof, the petition to withdraw from issue is dismissed as involving a moot issue.

The $130 fee submitted for the petition under 37 CFR 1.313(c)(2) will be refunded to petitioner's deposit account.

Inquiries concerning this decision may be directed to the undersigned at (571) 272-3208.

This matter is being referred to Technology Center AU 2189 for appropriate processing of the RCE filed September 30, 2005 and consideration of the IDS submitted concurrently therewith.

Karen Creasy

Karen Creasy
Petitions Examiner
Office of Petitions

UNITED STATES PATENT AND TRADEMARK OFFICE

Commissioner for Patents
United States Patent and Trademark Office
P.O. Box 1450
Alexandria, VA 22313-1450
www.uspto.gov

**VINCENT J. ROCCIA**
**WOODCOCK WASHBURN LLP**
**CIRA CENTRE, 12TH FLOOR**
**2929 ARCH STREET**
**PHILADELPHIA PA 19104-2891**

MAILED

MAY 08 2009

OFFICE OF PETITIONS

| | | |
|---|---|---|
| In re Application of | : | |
| Kevin F. Corcoran | : | DECISION ON PETITION |
| Application No. 10/625,280 | : | TO WITHDRAW |
| Filed: July 23, 2003 | : | FROM RECORD |
| Attorney Docket No. CRNT-0141-US | : | |

This is a decision on the Request to Withdraw as attorney or agent of record under 37 C.F.R. § 1.36(b), filed April 8, 2005.

The request is **NOT APPROVED** because it is moot.

A review of the file record indicates that on April 27, 2006 the power of attorney to Woodcock Washburn LLP was revoked by the assignee of the patent application. Accordingly, the request to withdraw under 37 C.F.R. § 1.36(b) is moot.

All future communications from the Office will be directed to the below-listed address until otherwise notified by applicant.

Telephone inquires concerning this decision should be directed to the undersigned at 571-272-7751. All other inquires concerning either the examination or status of the application should be directed to the Technology Center.

Joan Olszewski
Petitions Examiner
Office of Petitions

cc: Capital Legal Group, LLC
1100 River Bay Road
Annapolis MD 21409

UNITED STATES PATENT AND TRADEMARK OFFICE

Commissioner for Patents
United States Patent and Trademark Office
P.O. Box 1450
Alexandria, VA 22313-1450
www.uspto.gov

**LADAS & PARRY LLP**
**224 SOUTH MICHIGAN AVENUE**
**SUITE 1600**
**CHICAGO IL 60604**

**MAILED**

JUL 0 2 2009

OFFICE OF PETITIONS

| | | |
|---|---|---|
| In re Application of | : | |
| Park et al. | : | |
| Application No. 10/625,287 | : | ON PETITION |
| Filed: July 23, 2003 | : | |
| Attorney Docket No. CU-3301 WWP | : | |

This is a decision on the petition under 37 C.F.R. § 1.137(b), filed May 20, 2009, to revive the above-identified application.

The petition is **GRANTED**.

The petition satisfies the requirements of 37 CFR 1.137(b) in that petitioner has supplied (1) the reply in the form of an Amendment under 37 CFR 1.111, (2) the petition fee, and (3) a proper statement of unintentional delay.

Telephone inquiries concerning this decision should be directed to the undersigned at (571) 272-3206.

This matter is being referred to Technology Center AU 2675 for further examination on the merits.

Liana Walsh
Petitions Examiner
Office of Petitions

UNITED STATES PATENT AND TRADEMARK OFFICE

Commissioner for Patents
United States Patent and Trademark Office
P.O. Box 1450
Alexandria, VA 22313-1450
www.uspto.gov

Honeywell International Inc.
101 Columbia Road
PO Box 2245
Morristown, NJ 07962-2245

COPY MAILED

SEP 0 9 2004

OFFICE OF PETITIONS

| | | |
|---|---|---|
| In re Application of | : | |
| D'Angelo et al. | : | |
| Application No. 10/625,295 | : | DECISION ON PETITION |
| Filed: July 22, 2003 | : | |
| Attorney Docket No. H0004409-3114 | : | |

This is a decision on the petition filed May 24, 2004, requesting that the above-identified application be accorded a filing date of July 22, 2003, with Figure 6 described in the specification as part of the original disclosure.

On July 22, 2003, applicants filed the above-identified application. On March 23, 2004, the Office mailed a Notice of Omitted Item(s) in a Nonprovisional Application, stating that the application had been accorded a filing date of July 22, 2003, and advising applicants that Figure 6 appeared to have been omitted.

In response, on May 24, 2004, applicants filed the present petition and a copy of applicants' postcard receipt acknowledging receipt of 6 sheets of drawings on July 22, 2003. Additionally, applicants submitted 6 sheets of drawings, including Figure 6.

Upon review of the record, Figure 6, deposited on July 22, 2003, has not been located among the application papers. However, the evidence is convincing that the application papers deposited on July 22, 2003, included Figure 6, which was subsequently misplaced in the United States Patent and Trademark Office. Therefore, the application, including Figure 6, was complete on filing and will be granted a filing date of July 22, 2003.

Accordingly, the petition is granted.

The Notice of Omitted Item(s) was sent in error and is hereby vacated. Accordingly, the $130.00 petition fee is unnecessary and will be refunded to Deposit Account No. 50-2091.

The Office of Initial Patent Examination is directed to accorded the above-identified application a filing date of **July 22, 2003,** using Figures 1-5 submitted on that date and Figure 6 submitted on May 24, 2004, and to mail a corrected filing receipt. The Office is also directed to correct the records to indicate 6 sheets of drawings were present on filing.

Telephone inquiries specific to this matter should be directed to the undersigned at (703) 306-5589.

Christina Tartera Donnell

Christina Tartera Donnell
Senior Petitions Attorney
Office of Petitions

UNITED STATES PATENT AND TRADEMARK OFFICE

Commissioner for Patents
United States Patent and Trademark Office
P.O. Box 1450
Alexandria, VA 22313-1450
www.uspto.gov

HAMILTON, BROOK, SMITH & REYNOLDS, P.C.
530 VIRGINIA ROAD
P.O. BOX 9133
CONCORD MA 01742-9133

**COPY MAILED**

NOV 2 2 2006

**OFFICE OF PETITIONS**

In Application of :
Brown :
Application No.: 10/625,320 : ON PETITION
Filed: July 23, 2003 :
Attorney Docket No.: 2037.2005-008 :
For: METHOD AND APPARATUS FOR SEARCHING A FILTERING DATABASE WITHONE SEARCH OPERATION

This is a decision on the petition under 37 CFR 1.181, filed October 30, 2006 (certificate of mailing date October 26, 2006), to withdraw the holding of abandonment.

The petition under 37 CFR 1.181 is **GRANTED**.

The Office contended that the above-identified application became abandoned for failure to submit reply to the non-final Office action, mailed June 16, 2005, which set an extendable three (3) month period for reply. No reply being received, the Office contended that this application became abandoned on September 17, 2005. A Notice of Abandonment was mailed on October 13, 2006.

Petitioner alleges that the June 16, 2005 non-final Office action was not received at the correspondence address of record.

The showing required to establish non-receipt of an Office communication must include:

1. A statement from the practitioner stating that the Office communication was not received by the practitioner and attesting to the fact that a search of the file jacket and docket records indicates that the Office communication was not received.

2. A copy of the docket record where the non-received Office communication would have been entered had it been received and docketed must be attached to and referenced in practitioner's statement.[1]

Petitioner has proven nonreceipt. Practitioner has attested to a fruitless search of the file jacket and docket records. Practitioner has referenced a record where the non-received Office communication would have been entered had it been received. In addition, a review of the official application file reveals that the June 16, 2005 non-final Office action was returned to sender on June 22, 2005.

The petition is **granted**. The holding of abandonment is withdrawn and the Notice of Abandonment is **vacated**.

After the mailing of this decision, the application will be returned to Technology Center AU 2165 for the re-mailing of the June 16, 2005 non-final Office action with a new period for response.

Telephone inquiries may be directed to the undersigned at (571) 272-3230.

Shirene Willis Brantley
Senior Petitions Attorney
Office of Petitions

[1] See notice entitled "Withdrawing the Holding of Abandonment When Office Actions Are Not Received," 1156 O.G. 53 (November 16, 1993).

UNITED STATES PATENT AND TRADEMARK OFFICE

Commissioner for Patents
United States Patent and Trademark Office
P.O. Box 1450
Alexandria, VA 22313-1450
www.uspto.gov

**GENERAL ELECTRIC COMPANY**
**GLOBAL RESEARCH**
**ONE RESEARCH CIRCLE**
**PATENT DOCKET RM. BLDG. K1-4A59**
**NISKAYUNA NY 12309**

**MAILED**

APR 2 8 2010

**OFFICE OF PETITIONS**

| | | |
|---|---|---|
| In re Application of | : | |
| Edic et al. | : | |
| Application No. 10/625,321 | : | DECISION ON PETITION |
| Filed: July 23, 2003 | : | |
| Attorney Docket No. 120521-2 | : | |

This is a decision on the petition under the unintentional provisions of 37 CFR 1.137(b), filed March 12, 2010, to revive the above-identified application.

The petition is **GRANTED**.

This application became abandoned as a result of petitioner's failure to take appropriate action in a timely manner after the decision of December 24, 2008 by the Board of Patent Appeals and Interferences. Therefore, the proceedings as to the rejected claims were terminated. *See* 37 CFR 1.197(b). As no claim was allowed, the application became abandoned on February 25, 2009. *See* MPEP 1214.06. A Notice of Abandonment was mailed March 17, 2009.

The petition satisfies the requirements of 37 CFR 1.137(b) in that petitioner has supplied (1) the reply in the form of a Request for Continued Examination (RCE) and fee of $810.00 and the submission required by 37 CFR 1.114; (2) the petition fee of $1,620.00; and (3) a proper statement of unintentional delay.

It is not apparent whether the person signing the instant petition was ever given a power of attorney or authorization of agent to prosecute this patent. In accordance with 37 CFR 1.34(a), the signature appearing on the petition shall constitute a representation to the United States Patent and Trademark Office that he/she is authorized to represent the particular party in whose behalf he/she acts.

Telephone inquiries concerning this decision should be directed to the undersigned at (571) 272-7751.

The file is now being forwarded to Technology Center 2882 for processing of the Request for Continued Examination under 37 CFR 1.114 filed with the instant petition.

Joan Olszewski

Joan Olszewski
Petitions Examiner
Office of Petitions

UNITED STATES PATENT AND TRADEMARK OFFICE

Commissioner for Patents
United States Patent and Trademark Office
P.O. Box 1450
Alexandria, VA 22313-1450
www.uspto.gov

**DLA PIPER US LLP**
**2000 UNIVERSITY AVENUE**
**E. PALO ALTO CA 94303-2248**

COPY MAILED

MAR 0 7 2008

OFFICE OF PETITIONS

In re Application of
Bear et al.
Application No. 10/625,333
Filed: July 22, 2003
Attorney Docket No. 2103175-991101

DECISION ON PETITION

This is a decision on the petition under the unintentional provisions of 37 CFR 1.137(b), filed February 6, 2008, to revive the above-identified application.

The petition is **GRANTED**.

The petition satisfies the requirements of 37 CFR 1.137(b) in that petitioner has supplied (1) the reply in the form of an Amendment and Formal Drawings, (2) the petition fee, and (3) a proper statement of unintentional delay.

Telephone inquiries concerning this decision should be directed to the undersigned at (571) 272-3206.

This matter is being referred to Technology Center 2162 for further examination on the merits.

Liana Walsh
Petitions Examiner
Office of Petitions

## SPE RESPONSE FOR CERTIFICATE OF CORRECTION

Paper No.: ____

DATE : 2/20/08

TO SPE OF : ART UNIT 2192

SUBJECT : Request for Certificate of Correction for Appl. No.: 10/625334 Patent No: 7272829 B1

A response is requested with respect to a request for a certificate of correction.

With respect to the change(s) requested to correct Office and/or Applicant's errors, should the patent read as shown in the certificate of correction attached herewith or the COCIN document(s), in IFW images for the above-identified patented application? No new matter should be introduced, nor should the scope or meaning of the claims be changed.

If the response is for an IFW, within 7 days, please complete and forward the response, to the employee (named below) via scanning into application images, using document code **COCX**.

If the response is for a paper file wrapper, please complete the response and forward the response with the paper file wrapper, to the employee (named below), within 7 days, to:

**Certificates of Correction Branch (CofC)**
**South Tower - 9A22**
**Palm Location 7580**

*VIRGINIA TOLBERT*
**Certificates of Correction Branch**
**703-308-9390 ext. 113**

**Thank You For Your Assistance**

**The request for issuing the above-identified correction(s) is hereby:**
Note your decision on the appropriate box.

- ☒ **Approved** — All changes apply.
- ☐ **Approved in Part** — Specify below which changes **do not** apply.
- ☐ **Denied** — State the reasons for denial below.

**Comments:** The request to correct the specified error(s) has been approved.

TUAN DAM
SUPERVISORY PATENT EXAMINER

SPE

2192
Art Unit

UNITED STATES PATENT AND TRADEMARK OFFICE

COMMISSIONER FOR PATENTS
UNITED STATES PATENT AND TRADEMARK OFFICE
P.O. BOX 1450
ALEXANDRIA, VA 22313-1450
www.uspto.gov

Paper No.

DUANE MORRIS, LLP
IP DEPARTMENT
ONE LIBERTY PLACE
PHILADELPHIA, PA 19103-7396

COPY MAILED
SEP 0 8 2004
OFFICE OF PETITIONS

| | | |
|---|---|---|
| In re Application of: | : | |
| Tran and Carr | : | |
| Application No. 10/625,384 | : | DECISION GRANTING |
| Filed: July 23, 2003 | : | PETITION UNDER |
| Title of Invention: | : | 37 CFR 1.47(a) |
| MOLECULAR DETECTION USING AN | : | |
| OPTICAL WAVEGUIDE FIXED TO A | : | |
| CANTILEVER | : | |

This is in response to the correspondence filed July 8, 2004[1], which is properly treated as a petition under 37 CFR 1.47(a), to allow the other inventor(s) to proceed with the application on behalf of himself or herself and the nonsigning inventor.

The petition is **granted**.

The above-identified application and papers have been reviewed and found in compliance with 37 CFR 1.47(a). This application is hereby accorded Rule 1.47(a) status.

Petitioner has shown that the non-signing inventor, Dustin W. Carr, refuse to join in the application.

As provided in Rule 1.47(a), this Office will forward notice of this application's filing to the non-signing inventor at the addresses given in the Petition. Notice of the filing of this application will also be published in the Official Gazette.

[1] Applicant also filed a four (4) month extension of time and fees; however, the correspondence was received in this Office on July 8, 2004, two (2) days after the reply period, including a 4 month extension of time, had expired. It is noted that applicant failed to use the procedures provided by 37 CFR 1.8, as the correspondence was apparently executed on July 6, 2004. Accordingly, an additional $530.00 has been charged to deposit account 04-1679 as authorized in the instant petition.

The application file is an Image File Wrapper (IFW) file and, as such, no forwarding of the file is necessary. An electronic message will be sent to the Office of Initial Patent Examination for continued processing of the application in due course.

Telephone inquiries related to this decision may be directed to the undersigned at (703) 305-0014.

Derek L. Woods
Petitions Attorney
Office of Petitions

UNITED STATES PATENT AND TRADEMARK OFFICE

Commissioner for Patents
United States Patent and Trademark Office
P.O. Box 1450
Alexandria, VA 22313-1450
www.uspto.gov

**WELSH & KATZ, LTD**
**120 S RIVERSIDE PLAZA**
**22ND FLOOR**
**CHICAGO IL 60606**

COPY MAILED

DEC 11 2006

OFFICE OF PETITIONS

In re Application of :
Kevin L. Parsons :
Application No. 10/625,388 : ON PETITION
Filed: July 23, 2003 :
Attorney Docket No. 89697 :

This is a decision on the petition, filed December 7, 2006, under 37 CFR 1.313(c)(2) to withdraw the above-identified application from issue after payment of the issue fee.

The petition is **GRANTED**.

The above-identified application is withdrawn from issue for consideration of a submission under 37 CFR 1.114 (request for continued examination). See 37 CFR 1.313(c)(2).

**Petitioner is advised that the issue fee paid on November 15, 2006 in the above-identified application cannot be refunded. If, however, the above-identified application is again allowed, petitioner may request that it be applied towards the issue fee required by the new Notice of Allowance.**[1]

Telephone inquiries should be directed to the undersigned at (571) 272-3208.

The examiner of Technology Center AU 3754 will consider the request for continued examination under 37 CFR 1.114.

Karen Creasy

Karen Creasy
Petitions Examiner
Office of Petitions

---

[1] The request to apply the issue fee to the new Notice may be satisfied by completing and returning the new Issue Fee Transmittal Form PTOL-85(b), which includes the following language thereon: "Commissioner for Patents is requested to apply the Issue Fee and Publication Fee (if any) or re-apply any previously paid issue fee to the application identified above." Petitioner is advised that, whether a fee is indicated as being due or not, the Issue Fee Transmittal Form **must** be completed and timely submitted to avoid abandonment. Note the language in bold text on the first page of the Notice of Allowance and Fee(s) Due (PTOL-85).

UNITED STATES PATENT AND TRADEMARK OFFICE

Commissioner for Patents
United States Patent and Trademark Office
P.O. Box 1450
Alexandria, VA 22313-1450
www.uspto.gov

KEVIN G. FRASER
116 WOODS EDGE DRIVE
BELLEVILLE, IL 62221

COPY MAILED
APR 29 2008

| | | |
|---|---|---|
| In re Application of | : | |
| Kevin G. Fraser | : | |
| Application No. 10/625,396 | : | DECISION ON PETITION |
| Filed: July 25, 2003 | : | |
| Attorney Docket No. STAR-2 | : | |

This is a decision on the petition under the unintentional provisions of 37 CFR 1.137(b), filed November 2, 2007, to revive the above-identified application.

The petition is **GRANTED**.

The application became abandoned for failure to timely reply within the meaning of 37 CFR 1.113 to the final Office action, mailed May 12, 2006, which set a shortened statutory period for reply of three (3) months. No extensions of time under the provisions of 37 CFR 1.136(a) were obtained. Accordingly, the application became abandoned on August 13, 2006.

The petition satisfies the requirements of 37 CFR 1.137(b) in that petitioner has supplied (1) the reply in the form of a Request for Continued Examination (RCE) and fee of $405, and the submission required by 37 CFR 1.114; (2) the petition fee of $770; and (3) a proper statement of unintentional delay.

There is no indication that the person signing the instant petition was ever given a power of attorney or authorization of agent to prosecute the above-identified application. In accordance with 37 CFR 1.34(a), the signature appearing on the petition shall constitute a representation to the United States Patent and Trademark Office that he/she is authorized to represent the particular party in whose behalf he/she acts. However, if petitioner desires to receive future correspondence regarding this application, the appropriate power of attorney or authorization of agent must be submitted. A courtesy copy of this decision is being mailed to petitioner. Nevertheless, all future correspondence regarding this application file will be directed solely to the address of record until otherwise instructed.

It is not apparent whether the statement of unintentional delay was signed by a person who would have been in a position of knowing that the entire delay in filing the required reply from the due date for the reply until the filing of a grantable petition pursuant to 37 CFR 1.137(b) was unintentional. Nevertheless, in accordance with 37 CFR 10.18, the statement is accepted as constituting a certification of unintentional delay. However, in the event that petitioner has no knowledge that the delay was unintentional, petitioner must make such an inquiry to ascertain that, in fact, the delay was unintentional. If petitioner discovers that the delay was intentional, petitioner must so notify the Office.

Telephone inquiries concerning this decision should be directed to the undersigned at (571) 272-1642.

This application is being referred to Technology Center AU 1732 for processing of the RCE and for appropriate action by the Examiner in the normal course of business on the amendment submitted in accordance with 37 CFR 1.114.

April M. Wise
Petitions Examiner
Office of Petitions

cc: ROBERT B. REESER, III
ARMSTRONG TEASDALE, LLP
ONE METROPOLITIOAN SQUARE
SUITE 2600
ST LOUIS, MO 63102-2740

UNITED STATES PATENT AND TRADEMARK OFFICE

Commissioner for Patents
United States Patent and Trademark Office
P.O. Box 1450
Alexandria, VA 22313-1450
www.uspto.gov

Patent Docket Department
Armstrong Teasdale LLP
One Metropolitan Square
Suite 2600
St. Louis, MO 63102-2740

**COPY MAILED**

DEC 0 4 2009

**OFFICE OF PETITIONS**

In re Application of Fraser :
Application No. 10/625,396 :
Filing Date: July 23, 2003 :
Attorney Docket No. STAR-2 (22550-15) :

Decision on Petition

This is a decision on the petition under 37 CFR 1.137(b), filed September 2, 2009, to revive the above-identified application.

The petition is **granted**.

The above-identified application became abandoned for failure to reply in a timely manner to the non-final Office action mailed September 5, 2008, which set a shortened statutory period for reply of three (3) months. An extension of time under the provisions of 37 CFR 1.136(a) was not obtained. Accordingly, the above-identified application became abandoned on December 6, 2008. A Notice of Abandonment was mailed on April 24, 2009.

The instant petition requests revival of the application.

A grantable petition under 37 CFR 1.137(b) must be accompanied by:

(1) The reply required to the outstanding Office action or notice, unless previously filed,
(2) The petition fee,
(3) A statement that the entire delay in filing the required reply from the due date for the reply until the filing of a grantable petition pursuant to 37 CFR 1.137(b) was unintentional, and
(4) A terminal disclaimer and fee if the application was filed on or before June 8, 1995 or if the application is a design application.

Petitioner has submitted a reply to the non-final Office action. Petitioner has submitted the required petition fee of $810. Petitioner has stated the entire delay in filing the required reply from the due date for the reply until the filing of the petition was unintentional.

Petitioner has met the requirements to revive the above-identified application pursuant to 37 CFR 1.137(b). Therefore, the petition is granted and the application is revived.

Technology Center Art Unit 1791 will be informed of the instant decision and the application will be further examined in due course.

Telephone inquiries regarding this communication should be directed to Petitions Attorney Steven Brantley at (571) 272-3203.

Charles Steven Brantley
Senior Petitions Attorney
Office of Petitions

UNITED STATES PATENT AND TRADEMARK OFFICE

Commissioner for Patents
United States Patent and Trademark Office
P.O. Box 1450
Alexandria, VA 22313-1450
www.uspto.gov

COPY MAILED
AUG 29 2006
OFFICE OF PETITIONS

Robert F. Frijouf
Frijouf, Rust & Pyle, P.A.
201 East Davis Boulevard
Tampa FL 33606

| | | |
|---|---|---|
| In re Application of | : | |
| Yerby et al. | : | |
| Application No. 10/625,421 | : | DECISION ON PETITION |
| Filed: July 21, 2003 | : | |
| Attorney Docket No.: 2003-0071 | : | |

This is a decision on the petition under 37 CFR 1.137(b), filed August 7, 2006, to revive the above-identified application.

This above-identified application became abandoned for failure to timely file a reply to a Restriction Requirement mailed September 22, 2005. The Office Action set a one (1) month shortened statutory period for reply. No extensions of time were obtained under the provisions of 37 CFR 1.136(a). Accordingly, this application became abandoned on October 23, 2005. A Notice of Abandonment was mailed on July 17, 2006.

This petition is hereby **GRANTED**.

The Office hereby acknowledges receipt of the Response to the Restriction Requirement submitted with the instant petition.

This application is being forwarded to Technology Center 2800 for further processing.

Telephone inquiries concerning this matter should be directed to the undersigned at (571) 272-3215.

Charlema R. Grant

Charlema R. Grant
Petitions Attorney
Office of Petitions

UNITED STATES PATENT AND TRADEMARK OFFICE

Commissioner for Patents
United States Patent and Trademark Office
P.O. Box 1450
Alexandria, VA 22313-1450
www.uspto.gov

MAY 04 2004

Gregg Scheller
17820 Suzanne Ridge Drive
Wildwood, MO 63038

| | | |
|---|---|---|
| In re Application of | : | |
| Gregg Scheller et al | : | |
| Serial No.: 10/625,434 | : | DECISION ON |
| Filed: July 23, 2003 | : | PETITON TO MAKE SPECIAL |
| For: Device for Radial Optic Neurotomy | : | |

This is in response to applicants' petition filed January 22, 2004, to make the above-identified application special under the provisions of 37 CFR 1.102(d), based on infringement.

Applicant has satisfied the provisions set forth in M.P.E.P. 708.02, II. Therefore the petition is **GRANTED**.

**The application will be forwarded to the examiner for action on the merits commensurate with this decision.**

Should there be any questions with regard to this letter please contact John Kittle by letter addressed to the Director, Technology Center 3700/2900, P.O. Box 1450 Alexandria, VA 22313-1450 or by telephone at (703) 308-0873 or by facsimile transmission at (703) 308-3139.

John E. Kittle

John E. Kittle
Director
Technology Center 3700/2900

UNITED STATES PATENT AND TRADEMARK OFFICE

Commissioner for Patents
United States Patent and Trademark Office
P.O. Box 1450
Alexandria, VA 22313-1450
www.uspto.gov

**OPTV/MOFO**
**C/O MORRISON & FOERSTER LLP**
**1650 TYSONS BOULEVARD**
**SUITE 300**
**MCLEAN, VA 22102**

COPY MAILED
DEC 0 7 2006
OFFICE OF PETITIONS

| | | |
|---|---|---|
| In re Application of | : | |
| **ZENONI** | : | |
| Application No. 10/625,456 | : | DECISION ON PETITION |
| Filed: July 22, 2003 | : | TO WITHDRAW |
| Attorney Docket No. INTE.53USU1 (ITC53) | : | FROM RECORD |
| | : | |

This is a decision on the Request to Withdraw as attorney or agent of record under 37 C.F.R. § 1.36(b), filed September 14, 2006.

The request is **NOT APPROVED**.

A grantable request to withdraw as attorney/agent of record must be signed by every attorney/agent seeking to withdraw or contain a clear indication that one attorney is signing on behalf of another/others. A request to withdraw will not be approved unless at least 30 (thirty) days would remain between the date of approval and the later of the expiration date of a time to file a response or the expiration date of the maximum time period which can be extended under 37 C.F.R. § 1.136(a).

The Office cannot approve the request at this time since the reasons provided do not meet any of the conditions under the mandatory or permissive categories enumerated in 37 CFR 10.40. Section 10.40 of Title 37 of the Code of Federal Regulation states, "[a] practitioner shall not withdraw from employment in a proceeding before the Office without permission from the Office[.]" More specifically, 37 CFR 10.40 states, "[i]f paragraph (b) of this section is not applicable, a practitioner may not request permission to withdraw in matter pending before the Office unless such request or such withdrawal is" for one the permissive reasons listed in 37 CFR 10.40(c). The reasons set forth in the request, "Application is being transferred to another attorney" does not meet any conditions set forth in 37 CFR 1040.

All future communications from the Office will continue to be directed to the above-listed address until otherwise properly notified by the applicant.

There is no outstanding Office action that requires a reply from the applicant.

Telephone inquiries concerning this decision should be directed to the undersigned at 571-272-6825.

Patricia Volpe
Petitions Examiner
Office of Petitions

cc: **Marc Kaufman, Esq.**
**NIXON PEABODY LLP**
**401 9th Street, N.W.**
**Suite 900**
**Washington, D.C. 20004**

UNITED STATES PATENT AND TRADEMARK OFFICE

Commissioner for Patents
United States Patent and Trademark Office
P.O. Box 1450
Alexandria, VA 22313-1450
www.uspto.gov

OPTV/MOFO
C/O MORRISON & FOERSTER LLP
1650 TYSONS BOULEVARD, SUITE 300
MCLEAN VA 22102

**COPY MAILED**

JUN 12 2007

**OFFICE OF PETITIONS**

| | | |
|---|---|---|
| In re Application of | : | |
| Ian Zenoni | : | |
| Application No. 10/625,456 | : | DECISION ON PETITION |
| Filed: July 22, 2003 | : | TO WITHDRAW |
| Attorney Docket No. INTE.53USU1 (ITC53) | : | FROM RECORD |
| | : | |

This is a decision on the Request to Withdraw as attorney or agent under 37 C.F.R. § 1.36(b) or 37 C.F.R. § 10.40 filed January 17, 2007.

The request is **NOT APPROVED**.

A review of the file record indicates that Adam Keser does not have power of attorney in this patent application nor is there any statement or evidence of record of employment in or otherwise being engaged in the proceedings in this patent application. Accordingly, the request to withdraw under 37 C.F.R. § 1.36(b) is not applicable.

All future communications from the Office will continue to be directed to the below-listed address until otherwise properly notified by the applicant.

Telephone inquires concerning this decision should be directed to undersigned at 571-272-1642.

April M. Wise
Petitions Examiner
Office of Petitions

cc: MARC KAUFMAN, ESQ.
NIXON PEABODY. LLP
401 9TH STREET NW
SUITE 900
WASHINGTON, DC 20004

UNITED STATES PATENT AND TRADEMARK OFFICE

Commissioner for Patents
United States Patent and Trademark Office
P.O. Box 1450
Alexandria, VA 22313-1450
www.uspto.gov

COPY MAILED

MAY 1 8 2007

OFFICE OF PETITIONS

**MERCHANT & GOULD PC**
**P.O. BOX 2903**
**MINNEAPOLIS MN 55402-0903**

In re Application of

**PIKE,** Mark
Application No. 10/625,463
Filed: July 22, 2003
Attorney Docket No. **14031.1US01**

DECISION ON PETITION
TO WITHDRAW
FROM RECORD

This is a decision on the Request to Withdraw as attorney or agent of record under 37 C.F.R. § 1.36(b), filed January 22, 2007.

The request is **APPROVED**.

A grantable request to withdraw as attorney/agent of record must be signed by every attorney/agent seeking to withdraw or contain a clear indication that one attorney is signing on behalf of another/others. A request to withdraw will not be approved unless at least 30 (thirty) days would remain between the date of approval and the later of the expiration date of a time to file a response or the expiration date of the maximum time period which can be extended under 37 C.F.R. § 1.136(a).

The request was signed by Sarah M. Monfeldt. The undersigned attorney has been withdrawn; all other attorneys remain of record.

The correspondence address of record remains unchanged.

There is an outstanding Office action mailed March 14, 2007 that requires a reply from the applicant.

Telephone inquiries concerning this decision should be directed to Michelle R. Eason at 571-272-4231.

T. Williams

Terri Williams
Petitions Examiner
Office of Petitions

cc: **SARAH M. MONFELDT**
**UNITED STATES PATENT & TRADEMARK OFFICE**
**P.O. BOX 1450**
**ALEXANDRIA, VA 22313-145**

UNITED STATES PATENT AND TRADEMARK OFFICE

Commissioner for Patents
United States Patent and Trademark Office
P.O. Box 1450
Alexandria, VA 22313-1450
www.uspto.gov

CRAIG WIGHTMAN
1234 COUNTY HIGHWAY 23
RICHFIELD SPRINGS, NY 13439

COPY MAILED
AUG 03 2004
OFFICE OF PETITIONS

| | | |
|---|---|---|
| In re Application of | : | |
| Craig Wightman | : | |
| Application No. 10/625,473 | : | ON PETITION |
| Filed: July 23, 2003 | : | |
| Title: ATTACHMENT FOR A PLOW | : | |

This is in response to the papers styled, "Petition To Waive Additional Fees," filed May 21, 2004. The papers were recently forwarded to this office for review.

The petition is **dismissed.**

The above-identified application was filed on July 23, 2003. However, on December 2, 2003, the Office of Initial Patent Examination mailed a "Notice To File Missing Parts," (Notice) that stated a filing date was granted, but the statutory basic filing fee and oath or declaration were missing. The Notice also required the submission of a $65.00 surcharge for the late submission of the filing fee and oath or declaration.

Petitioner requests the waiver of "the extra $740.00 in additional fees and/or penalties." It appears that Petitioner requests waiver of the fees associated with a request for an extension of time under 37 CFR 1.136(a), as $740.00 is the fee required to file a request for an extension of time within the fourth month (when then instant petition was filed). However, it is noted that the maximum extendable period of time under 37 CFR 1.136(a) ended at midnight on July 2, 2004. The filing of a request for an extension of time is no longer possible and this application is considered abandoned. As such, this petition must be dismissed as moot.

Please note, information for filing a petition under 37 CFR 1.137(a) or (b) to revive the abandoned application, and information for filing a petition under 37 CFR 1.181 to withdraw the holding of abandonment, shall be sent to petitioner under separate cover.

Telephone inquiries should be directed to the undersigned at (703) 306-9200.

Edward J. Tannouse
Petitions Attorney
Office of Petitions
United States Patent and Trademark Office

UNITED STATES PATENT AND TRADEMARK OFFICE

Commissioner for Patents
United States Patent and Trademark Office
P.O. Box 1450
Alexandria, VA 22313-1450
www.uspto.gov
DIW 11-04

CRAIG WIGHTMAN
1234 COUNTY HIGHWAY 23
RICHFIELD SPRINGS NY 13439

**COPY MAILED**

NOV 23 2004

**OFFICE OF PETITIONS**

| | | |
|---|---|---|
| In re Application of | : | |
| Craig Wightman | : | |
| Application No. 10/625,473 | : | ON PETITION |
| Filed: 23 July, 2003 | : | |
| For: Attachment for a Plow | : | |

This is a decision on the petition under 37 CFR 1.137(a),[1] to revive the above-identified application unavoidably abandoned, filed on 21 September, 2004.

The petition is **DISMISSED**.

Any request for reconsideration of this decision must be submitted within TWO (2) MONTHS from the mail date of this decision. Extensions of time under 37 CFR 1.136(a) are permitted. The reconsideration request should include a cover letter entitled "Renewed Petition under 37 CFR 1.137(a)." Or, as explained herein, under 37 CFR 1.137(b). This is not a final agency decision.

---

[1]A grantable petition under 37 CFR 1.137(a) must be accompanied by:

(1) the required reply, unless previously filed; In a nonprovisional application abandoned for failure to prosecute, the required reply may be met by the filing of a continuing application. In a nonprovisional utility or plant application filed on or after June 8, 1995, and abandoned for failure to prosecute, the required reply may also be met by the filing of a request for continued examination in compliance with § 1.114. In an application or patent, abandoned or lapsed for failure to pay the issue fee or any portion thereof, the required reply must be the payment of the issue fee or any outstanding balance thereof.

(2) the petition fee as set forth in 37 CFR 1.17(l);

(3) a showing to the satisfaction of the Commissioner that the entire delay in filing the required reply from the due date for the reply until the filing of a grantable petition pursuant to 37 CFR 1.137(a) was unavoidable; and

(4) any terminal disclaimer (and fee as set forth in 37 CFR 1.20(d)) required pursuant to 37 CFR 1.137(c)).

This application became abandoned on 3 February, 2003, for failure to timely reply to the Notice to File Missing Parts of Nonprovisional Application mailed on 2 December, 2003, which set a two (2) month shortened period for reply. No extensions of the time for reply in accordance with 37 CFR 1.136(a) were obtained. The filing of the present petition precedes the mailing of Notice of Abandonment.

Petitioner, *pro se*, asserts that his registered patent attorney, Donald J. Perrault, informed him in May, 2004, that he would no longer represent JGB Enterprises (JGB), petitioner's business partner, due to nonpayment of legal fees. Petitioner asserts that Perrault informed him that the patent was in jeopardy of abandonment, but would not explain what action was needed to avoid abandonment because JGB, not petitioner, was his client.

Petitioner further states that he then contacted the Office of Initial Patent Examination (OIPE) and was instructed that the filing fee and surcharge for its late filing were due. On 24 March, 2004, petitioner filed the basic filing fee and surcharge and a petition to waive the extension of time fees. The petition was dismissed on 3 August, 2004, because the extendable time period had expired, and an extension was no longer possible. It was additionally noted that an executed oath or declaration was required.

On 21 September, 2004, the present petition was filed, accompanied by an executed declaration. Petitioner asserts unavoidable delay in that he was never informed that an oath or declaration was due.

A grantable petition under 37 CFR 1.137(a) <u>must</u> be accompanied by:

(1) the required reply, unless previously filed; In a nonprovisional application abandoned for failure to prosecute, the required reply may be met by the filing of a continuing application. In an application or patent, abandoned or lapsed for failure to pay the issue fee or any portion thereof, the required reply must be the payment of the issue fee or any outstanding balance thereof.

(2) the petition fee as set forth in 37 CFR 1.17(l);

(3) a showing to the satisfaction of the Commissioner that the entire delay in filing the required reply from the due date for the reply until the filing of a grantable petition pursuant to 37 CFR 1.137(a) was unavoidable; and

(4) any terminal disclaimer (and fee as set forth in 37 CFR

1.20(d)) required pursuant to 37 CFR 1.137(c)).

The petition lacks item (3).

With regard to item (3), the petition lacks the required showing of unavoidable delay under 37 CFR 1.137(a). Decisions on reviving abandoned applications on the basis of "unavoidable" delay have adopted the reasonably prudent person standard in determining if the delay was unavoidable:

> The word 'unavoidable' . . . is applicable to ordinary human affairs, and requires no more or greater care or diligence than is generally used and observed by prudent and careful men in relation to their most important business. It permits them in the exercise of this care to rely upon the ordinary and trustworthy agencies of mail and telegraph, worthy and reliable employees, and such other means and instrumentalities as are usually employed in such important business. If unexpectedly, or through the unforeseen fault or imperfection of these agencies and instrumentalities, there occurs a failure, it may properly be said to be unavoidable, all other conditions of promptness in its rectification being present.[2]

At the outset, petitioner has not explained the relationship between petitioner and attorney Perrault. Petitioner may wish to send a letter, certified mail, return receipt requested, to attorney Perrault explaining that the Office is investigating the circumstances of the abandonment of this application, and requesting Perrault explain the nature of his agreement with petitioner, and to explain why he (Perrault) did not explain to petitioner, upon petitioner's inquiry, what reply was required to avoid abandonment of the application. A copy of this decision should accompany petitioner's request. Petitioner should request a reply within (1) month. Any reply should be submitted with a renewed petition. If no reply is received, petitioner should so state in any renewed petition.

---

[2] In re Mattullath, 38 App. D.C. 497, 514-15 (1912)(quoting Ex parte Pratt, 1887 Dec. Comm'r Pat. 31, 32-33 (1887)); see also Winkler v. Ladd, 221 F. Supp. 550, 552, 138 USPQ 666, 167-68 (D.D.C. 1963), aff'd, 143 USPQ 172 (D.C. Cir. 1963); Ex parte Henrich, 1913 Dec. Comm'r Pat. 139, 141 (1913). In addition, decisions on revival are made on a "case-by-case basis, taking all the facts and circumstances into account." Smith v. Mossinghoff, 671 F.2d 533, 538, 213 USPQ 977, 982 (D.C. Cir. 1982). Finally, a petition cannot be granted where a petitioner has failed to meet his or her burden of establishing that the delay was "unavoidable." Haines v. Quigg, 673 F. Supp. 314, 316-17, 5 USPQ2d 1130, 1131-32 (N.D. Ind. 1987).

Further, while the extent of the relationship between petitioner and Perrault has not been explained, petitioner is also reminded that the Patent and Trademark Office is not the proper forum for resolving a dispute between petitioner and petitioner's representative.[3] Moreover, the Patent and Trademark Office must rely on the actions or inactions of duly authorized and voluntarily chosen representatives of the applicant, and petitioner is bound by the consequences of those actions or inactions.[4] Specifically, petitioner's delay caused by the mistakes or negligence of his voluntarily chosen representative does not constitute unavoidable delay within the meaning of 35 U.S.C. 133 or 37 CFR 1.137(a).[5]

With regards to OIPE's alleged failure to notify petitioner that the oath or declaration was missing and required, petitioner is not entitled to rely upon oral advice from the Office. A delay resulting from the lack of knowledge or improper application of the patent statute, rules of practice or the MPEP does not constitute an "unavoidable"delay.[6] A delay caused by an applicant's lack of knowledge or improper application of the patent statute, rules of practice or the MPEP is not rendered "unavoidable" due to: (1) the applicant's reliance upon oral advice from Office employees; or (2) the Office's failure to advise the applicant of any deficiency in sufficient time to permit the applicant to take corrective action.[7]

While the showing of record is unfortunate, it does not rise to the level of unfortunate delay. As such, the petition must be dismissed.

---

[3] Ray v. Lehman, 55 F.3d 606, 608-09, 34 USPQ2d 1786, 1787 (Fed. Cir. 1995).

[4] Link v. Wabash, 370 U.S. 626, 633-34 (1962); Huston v. Ladner, 973 F.2d 1564, 1567, 23 USPQ2d 1910, 1913 (Fed. Cir. 1992); *see also* Haines v. Quigg, 673 F. Supp. 314, 317, 5 USPQ2d 1130, 1132 (D.N. Ind. 1987).

[5] Haines v. Quigg, 673 F. Supp. 314, 5 USPQ2d 1130 (D. Ind. 1987); Smith v. Diamond, 209 USPQ 1091 (D.D.C. 1981); Potter v. Dann, 201 USPQ 574 (D.D.C. 1978); Ex parte Murray, 1891 Dec. Comm'r Pat. 130, 131 (Comm'r Pat. 1891).

[6] See Haines v. Quigg, 673 F. Supp. 314, 317, 5 USPQ2d 1130, 1132 (N.D. Ind. 1987), Vincent v, Mossinghoff, 230 USPQ 621, 624 (D.D.C. 1985); Smith v. Diamond, 209 USPQ 1091 (D.D.C. 1981); Potter v. Dann, 201 USPQ 574 (D.D.C. 1978); Ex parte Murray, 1891 Dec. Comm'r Pat. 130, 131 (1891).

[7] See In re Sivertz, 227 USPQ 255, 256 (Comm'r Pat. 1985); see also In re Colombo, Inc., 33 USPQ2d 1530, 1532 (Comm'r Pat. 1994)(while the Office attempts to notify applicants of deficiencies in their responses in a manner permitting a timely correction, the Office has no obligation to notify parties of deficiencies in their responses in a manner permitting a timely correction).

**ALTERNATIVE VENUE**

Petitioner may wish to consider filing a renewed petition under 37 CFR 1.137(b),[8] which now provides that where the delay in reply was unintentional, a petition may be filed to revive an abandoned application or a lapsed patent pursuant to 37 CFR 1.137(b).

The filing of a petition under the unintentional standard cannot be intentionally delayed and therefore should be filed promptly. A person seeking revival due to unintentional delay cannot make a statement that the delay was unintentional unless the entire delay, including the delay from the date it was discovered that the application was abandoned until the filing of the petition to revive under 37 CFR 1.137(b), was unintentional. A statement that the delay was unintentional is not appropriate if petitioner intentionally delayed the filing of a petition for revival under 37 CFR 1.137(b).

A copy of the form for filing a petition under 37 CFR 1.137(b) to revive an application unintentionally abandoned is enclosed herewith for petitioner's convenience.

Further correspondence with respect to this matter should be addressed as follows:

---

[8]Effective December 1, 1997, the provisions of 37 CFR 1.137(b) now provide that where the delay in reply was unintentional, a petition may be filed to revive an abandoned application or a lapsed patent pursuant to 37 CFR 1.137(b). A grantable petition filed under the provisions of 37 CFR 1.137(b) must be accompanied by:

(1) the required reply, unless previously filed. In a nonprovisional application abandoned for failure to prosecute, the required reply may be met by the filing of a continuing application. In a nonprovisional utility or plant application filed on or after 8 June, 1995, and abandoned for failure to prosecute, the required reply may also be met by the filing of a request for continued examination in compliance with § 1.114. In an application or patent, abandoned or lapsed for failure to pay the issue fee or any portion thereof, the required reply must be the payment of the issue fee or any outstanding balance thereof.

(2) the petition fee as set forth in 37 CFR 1.17(m);

(3) a statement that the entire delay in filing the required reply from the due date for the reply until the filing of a grantable petition pursuant to 37 CFR 1.137(b) was unintentional. The Commissioner may required additional information where there is a question whether the delay was unintentional; and

(4) any terminal disclaimer (and fee as set forth in 37 CFR 1.20(d)) required pursuant to 37 CFR 1.137(c)).

By mail: Mail Stop Petition
Commissioner for Patents
P.O. Box 1450
Alexandria, VA 22313-1450

By FAX: (703)872-9306
Attn: Office of Petitions

By hand: U.S. Patent and Trademark Office
220 20th Street S.
Customer Window, Mail Stop Petition
Crystal Plaza Two, Lobby, Room 1B03
Arlington, VA 22202

Telephone inquiries concerning this matter may be directed to the undersigned at (571)272-3231.

D Wood

Douglas I. Wood
Senior Petitions Attorney
Office of Petitions

Enclosures: Form PTO/SB/64
Fee Schedule FY05
Privacy Act Notification Form

UNITED STATES PATENT AND TRADEMARK OFFICE

Commissioner for Patents
United States Patent and Trademark Office
P.O. Box 1450
Alexandria, VA 22313-1450
www.uspto.gov
DIW 03-05

CRAIG WIGHTMAN
1234 COUNTY HIGHWAY 23
RICHFIELD SPRINGS NY 13439

**COPY MAILED**

MAR 1 4 2005

**OFFICE OF PETITIONS**

| | | |
|---|---|---|
| In re Application of | : | |
| Craig Wightman | : | |
| Application No. 10/625,473 | : | ON PETITION |
| Filed: 23 July, 2003 | : | |
| For: Attachment for a Plow | : | |

This is a decision on the petition under 37 CFR 1.137(b), to revive the above-identified application, filed on 11 February, 2005.

The petition is **GRANTED**.

This application became abandoned on 3 February, 2003, for failure to timely reply to the Notice to File Missing Parts of Nonprovisional Application mailed on 2 December, 2003, which set a two (2) month shortened period for reply. No extensions of the time for reply in accordance with 37 CFR 1.136(a) were obtained. The filing of the present petition precedes the mailing of Notice of Abandonment. The petition under 37 CFR 1.137(a) filed on 21 September, 2004, was dismissed on 21 November, 2004.

Petitioner has previously filed the required reply.

The application is being referred to the Office of Initial Patent Examination for further processing.

Telephone inquiries concerning this decision should be directed to the undersigned at (571) 272-3231.

DWood

Douglas I. Wood
Senior Petitions Attorney
Office of Petitions

UNITED STATES PATENT AND TRADEMARK OFFICE

6-01-06

Commissioner for Patents
United States Patent and Trademark Office
P.O. Box 1450
Alexandria, VA 22313-1450
www.uspto.gov

Patent No. : 7,038,359
Inventor(s) : Hirokazu Iwata
Issued : May 2, 2006
Title : PIEZOELECTRIC RESONATOR AND THE METHOD FOR MAKING THE SAME
Docket No. : 07610/000M901-US0

Re: Request for Certificate of Correction

Consideration has been given your request for the issuance of a certificate of correction for the above-identified patent under the provisions of 37 CFR 1.322 and/or 1.323.

Assignees' names and addresses (assignment data) printed in a patent are based *solely* on information supplied in the appropriate space for identifying the assignment data, i.e., item 3 of the Fee(s) Transmittal Form PTOL-85B. After payment of the issue fee, correction of assignment data submitted on the PTOL-85B can only be done by Certificate of Correction under 37 CFR 1.323, with a request under 37 CFR 3.81(b).

A request for a patent to be corrected to state the name of the assignee must:

A. state that the assignment was submitted for recordation as set forth in 37 CFR 3.11 before issuance of the patent;
B. include a request for a certificate of correction under 37 CFR 1.323 along with the fee set forth in 37 CFR 1.20(a); and
C. include the processing fee set forth in 37 CFR 1.17(i).

If the request is granted, Certificates of Correction Branch will be notified that a Certificate of Correction may be issued.
See Manual of Patent Examining Procedure, Section 1481.01 (Rev. 3) (Oct. 2005).

*Applicant has not included items A and or C above, accordingly, the request for Certificate of Correction to add or change the assignee data is dismissed.*
Any request under 37 CFR 3.81(b) should be directed to the following address or facsimile number:

By mail: Mail Stop PETITIONS
Commissioner for Patents
Post Office Box 1450
Alexandria, VA 22313-1450

By hand: Customer Service Window
Mail Stop Petitions
Randolph Building
401 Dulany Street
Alexandria, VA 22314

By fax: 571-273-8300
ATTN: Office of Petitions

If a fee (currently $100) was previously submitted for consideration of a Request for Certificate of Correction, under CFR 1.323, to correct assignment data, no additional fee is required.

In view of the foregoing, your request is hereby denied.

**Eva James**
For Cecelia Newman
Decisions & Certificates
of Correction Branch
(703) **308-9390 ext. 124** or (703) 305-8309

Flynn Barrison
Darby & Darby
P.O. Box 5257
New York, NY 10150-5257

ej

## SPE RESPONSE FOR CERTIFICATE OF CORRECTION

Paper No.: _____

**DATE** : 1-30-07

**TO SPE OF** : ART UNIT 4700

**SUBJECT** : Request for Certificate of Correction on Patent No.: 7038359 B2 (10/625478

A response is requested with respect to the accompanying request for a certificate of correction.

Please complete this form and return with file, within **7** days to:
Palm location **7580, Certificates of Correction Branch – South Tower – 9A22**
If response is for an IFW, **return to employee (named below) via PUBSCofC Team in MADRAS.**
With respect to the change(s) requested, correcting Office and/or Applicant's errors, should the patent read as shown in the certificate of correction (COCIN)? No new matter should be introduced, nor should the scope or meaning of the claims be changed.

Reconsideration for Assignee. Please reply A/S/A/P

Eva James

**Thank You For Your Assistance**

**Certificates of Correction Branch**
***Tel. No. 703-305-8309***

**The request for issuing the above-identified correction(s) is hereby:**
Note your decision on the appropriate box.

- ☐ **Approved** — **All** changes apply.
- ☐ **Approved in Part** — Specify below which changes **do not** apply.
- ☐ **Denied** — State the reasons for denial below.

**Comments:**

_____

_____

_____

_____

_____

BEST AVAILABLE COPY

_____ SPE

_____ Art Unit

UNITED STATES PATENT AND TRADEMARK OFFICE

Commissioner for Patents
United States Patent and Trademark Office
P.O. Box 1450
Alexandria, VA 22313-1450
www.uspto.gov
DIW Mar-07

DARBY & DARBY P.C.
P. O. BOX 5257
NEW YORK NY 10150-5257

**COPY MAILED**

MAR 07 2007

**OFFICE OF PETITIONS**

| | | |
|---|---|---|
| In re Patent No. 7,038,359 | : | |
| Issued: 2 May, 2006 | : | |
| Application No. 10/625,478 | : | ON PETITION |
| Filed: 22 July, 2003 | : | |
| Atty Dckt No. 07610/000M901-US0 | : | |

This is a decision on the petition filed on 31 May, 2006, which is being treated as a request under 37 CFR 3.81(b)[1] to correct the assignee on the front page of the above-identified patent by way of a Certificate of Correction.

The petition is **granted**.

Telephone inquires concerning this matter may be directed to the undersigned at 571.272.3231. Any questions concerning the issuance of the Certificate of Correction should be directed to the Certificates of Correction Branch at 703.305.8309.

The file is being referred to the Certificates of Correction Branch for issuance of the requested Certificate of Correction.

D Wood

Douglas I. Wood
Senior Petitions Attorney
Office of Petitions

[1] See Official Gazette of 22 June, 2004.

UNITED STATES PATENT AND TRADEMARK OFFICE

COMMISSIONER FOR PATENTS
UNITED STATES PATENT AND TRADEMARK OFFICE
P.O. BOX 1450
ALEXANDRIA, VA 22313-1450
www.uspto.gov

Paper No.

COPY MAILED

MAY 2 0 2004

OFFICE OF PETITIONS

JEFFREY T, KLAYMAN
BROMBERG & SUNSTEIN LLP
125 SUMMER STREET
BOSTON, MA 02110-1618

| | | |
|---|---|---|
| In re Application of: | : | |
| Hagh et al. | : | |
| Application No. 10/625,485 | : | DECISION GRANTING |
| Filed: July 23, 2003 | : | STATUS UNDER |
| Title of Invention: | : | 37 CFR 1.47(a) |
| REDUCED COMPLEXITY TURBO | : | |
| DECODING SCHEME | : | |

This is in response to a Petition Under 37 CFR 1.47(a), filed April 5, 2004, to allow the other inventor(s) to proceed with the application on behalf of himself or herself and the nonsigning inventor.

The petition is **granted**.

The above-identified application and papers have been reviewed and found in compliance with 37 CFR 1.47(a). This application is hereby accorded Rule 1.47(a) status.

Petitioner has shown that the non-signing inventor, Mohamadreza Marandian Hagh, cannot be found or reached.

As provided in Rule 1.47(a), this Office will forward notice of this application's filing to the non-signing inventor at the addresses given in the Petition. Notice of the filing of this application will also be published in the Official Gazette.

The application file is being returned to the Office of Initial Patent Examination for continued processing.

Telephone inquiries related to this decision may be directed to the undersigned at (703) 305-0014.

Derek L. Woods
Petitions Attorney
Office of Petitions

UNITED STATES PATENT AND TRADEMARK OFFICE

UNITED STATES DEPARTMENT OF COMMERCE
United States Patent and Trademark Office
Address: COMMISSIONER FOR PATENTS
P.O. Box 1450
Alexandria, Virginia 22313-1450
www.uspto.gov

DOCKET CLERK
P.O. DRAWER 800889
DALLAS, TX 75380

Mail Date: 05/03/2010

| | | |
|---|---|---|
| **Applicant** | : Craig Alexander Will | : DECISION ON REQUEST FOR |
| **Patent Number** | : 7627102 | : RECALCULATION of PATENT |
| **Issue Date** | : 12/01/2009 | : TERM ADJUSTMENT IN VIEW |
| **Application No** | : 10/625,493 | : OF WYETH AND NOTICE OF INTENT TO |
| **Filed** | : 07/23/2003 | : ISSUE CERTIFICATE OF CORRECTION |
| | | : |

The Request for Recalculation is **GRANTED** to the extent indicated.

The patent term adjustment has been determined to be **1034** days. The USPTO will *sua sponte* issue a certificate of correction reflecting the amount of PTA days determined by the recalculation.

Prior to the issuance of the certificate of correction, the USPTO will afford patentee an opportunity to be heard and request reconsideration. Accordingly, patentee has **one month or thirty (30) days**, whichever is longer, to file a request for reconsideration of this patent term adjustment calculation. See 35 U.S.C. 154(b)(3)(B)(ii) and 37 CFR 1.322(a)(4). No extensions of time will be granted under 37 CFR 1.136.

Patentee should use document code PET.OP if electronically filing a request for reconsideration of this patent term adjustment calculation. The patentee must also include the information required by 37 CFR 1.705(b)(2) and the fee required by 37 CFR 1.18(e). If patentee does not file a timely request for reconsideration of this patent term adjustment calculation including the information required by 37 CFR 1.705(b)(2) and the fee required by 37 CFR 1.18(e), the USPTO will issue a certificate of correction reflecting the PTA determination noted above.

Patentee should be aware that in order to preserve the right to review in the United States District Court for the District of Columbia of the USPTO patent term adjustment determination, patentee must ensure that he or she also take the steps required under 35 U.S.C. 154(b)(4)(A) in a timely manner. Nothing in the request for recalculation should be construed as providing an alternative time frame for commencing a civil action under 35 U.S.C. 154(b)(4)(A).

Any questions concerning this decision should be directed to the Office of Patent Legal Administration at 571-272-7702.

UNITED STATES PATENT AND TRADEMARK OFFICE

Commissioner for Patents
United States Patent and Trademark Office
P.O. Box 1450
Alexandria, VA 22313-1450
www.uspto.gov

PATTON BOGGS LLP
8484 WESTPARK DRIVE
SUITE 900
MCLEAN, VA 22102

MAILED

JUN 22 2009

OFFICE OF PETITIONS

| | | |
|---|---|---|
| In re Patent No. 6,811,799 | : | ON PETITION |
| Issue Date: November 2, 2004 | : | |
| Application No. 10/625,500 | : | |
| Filed: July 22, 2003 | : | |
| Patentee(s) Jifu Zhao et al | : | |

This is a decision on the petition under 37 CFR 1.378(c), filed May 12, 2009, to accept the delayed payment of a maintenance fee for the above-identified patent.

The petition is **GRANTED**.

The maintenance fee is hereby accepted and the above-identified patent is reinstated as of the mail date of this decision.

It is not apparent whether the person signing the statement of unintentional delay was in a position to have firsthand or direct knowledge of the facts and circumstances of the delay at issue. Nevertheless, such statement is being treated as having been made as the result of a reasonable inquiry into the facts and circumstances of such delay. In the event that such an inquiry has been made, petitioner must make such an inquiry. If such inquiry results in the discovery that the delay in paying the maintenance fee under 37 CFR 1.378(c) was intentional, petitioner must notify the Office.

Telephone inquiries concerning this decision should be directed to Irvin Dingle at (571) 272-3210.

Irvin Dingle
Petitions Examiner
Office of Petitions

UNITED STATES PATENT AND TRADEMARK OFFICE

Commissioner for Patents
United States Patent and Trademark Office
P.O. Box 1450
Alexandria, VA 22313-1450
www.uspto.gov

KOLISCH HARTWELL PC
200 PACIFIC BUILDING
520 SW YAMHILL STREET
PORTLAND, OR 97204

COPY MAILED

APR 09 2007

OFFICE OF PETITIONS

| | |
|---|---|
| In re Application of | : |
| Randall J. Huebner et al | : |
| Application No. 10/625,503 | : DECISION GRANTING PETITION |
| Filed: July 22, 2003 | : UNDER 37 CFR 1.313(c)(2) |
| Attorney Docket No. ACM 349 | : |

This is a decision on the petition, filed April 9, 2007, under 37 CFR 1.313(c)(2) to withdraw the above-identified application from issue after payment of the issue fee.

The petition is **GRANTED**.

The above-identified application is withdrawn from issue for consideration of a submission under 37 CFR 1.114 (request for continued examination). See 37 CFR 1.313(c)(2).

***Petitioner is advised that the issue fee paid on February 9, 2007 in the above-identified application cannot be refunded. If, however, the above-identified application is again allowed, petitioner may request that it be applied towards the issue fee required by the new Notice of Allowance.***[1]

Telephone inquiries should be directed to the undersigned at (571) 272-3218.

This matter is being referred to Technology Center AU 3733 for processing of the request for continued examination under 37 CFR 1.114 and for consideration of the Information Disclosure Statement.

Frances Hicks
Petitions Examiner
Office of Petitions

C:\Documents and Settings\FHicks\My Documents\470\Apr10\625503.wpd

---

[1] *The request to apply the issue fee to the new Notice may be satisfied by completing and returning the new Part B – Fee(s) Transmittal Form (along with any balance due at the time of submission). Petitioner is advised that the Issue Fee Transmittal Form must be completed and timely submitted to avoid abandonment.*

UNITED STATES PATENT AND TRADEMARK OFFICE

COMMISSIONER FOR PATENTS
UNITED STATES PATENT AND TRADEMARK OFFICE
P.O. BOX 1450
ALEXANDRIA, VA 22313-1450
www.uspto.gov

OBLON, SPIVAK, MCCLELLAND, MAIER & NEUSTADT, P.C.
1940 DUKE STREET
ALEXANDRIA, VA 22314

COPY MAILED
APR 11 2006
OFFICE OF PETITIONS

In re Application of :
Masahiko Satoh :
Application No. 10/625,510 : ON PETITION
Filed: July 24, 2003 :
Attorney Docket No.: 238551US2CONT :

This is a decision on the petition, filed April 10, 2006, under 37 CFR 1.313(c)(2) to withdraw the above-identified application from issue after payment of the issue fee.

The petition is **GRANTED**.

The above-identified application is withdrawn from issue for consideration of a submission under 37 CFR 1.114 (request for continued examination). See 37 CFR 1.313(c)(2).

***Petitioner is advised that the issue fee paid on February 3, 2006, in the above-identified application cannot be refunded. If, however, the above-identified application is again allowed, petitioner may request that it be applied towards the issue fee required by the new Notice of Allowance.*** [1]

Telephone inquiries relating to this decision should be directed to the undersigned at (571) 272-3204.

The application is being referred to Technology Center AU 2852 for further processing of the request for continued examination under 37 CFR 1.114.

Sherry D. Brinkley
Petitions Examiner
Office of Petitions

[1]The request to apply the issue fee to the new Notice may be satisfied by completing and returning the new Issue Fee Transmittal Form PTOL-85(b), which includes the following language thereon: "Commissioner for Patents is requested to apply the Issue Fee and Publication Fee (if any) or re-apply any previously paid issue fee to the application identified above." Petitioner is advised that, whether a fee is indicated as being due or not, the Issue Fee Transmittal Form **must** be completed and timely submitted to avoid abandonment. Note the language in bold text on the first page of the Notice of Allowance and Fee(s) Due (PTOL-85).

UNITED STATES PATENT AND TRADEMARK OFFICE

COMMISSIONER FOR PATENTS
UNITED STATES PATENT AND TRADEMARK OFFICE
P.O. BOX 1450
ALEXANDRIA, VA 22313-1450
www.uspto.gov

MAILED

JAN 16 2008

TECHNOLOGY CENTER 2100

HOWISON & ARNOTT, L.L.P.
P.O. BOX 741715
DALLAS, TX 75374-1715

In re Application of: Lunecki, et al.
Application No. 10/625,580
Attorney Docket No. CYGL-26,370
Filed: July 23, 2003
For: USB INTEGRATED MODULE

*SUA SPONTE*
WITHDRAWAL OF HOLDING OF ABANDONMENT *under 37 CFR § 1.181*

The petition under 37 CFR 1.181 for withdrawal of the holding of abandonment, filed January 11, 2008, is acknowledged.

A review of the application reveals that a Notice of Abandonment was mailed to the Applicant on January 9, 2008. The notice incorrectly indicated that the instant application was being held abandoned for failure to timely file a proper reply to the Final rejection mailed on March 7, 2007. In actuality, the Final Office action, mailed on March 7, 2007, began a **six-month** statutory period for reply. Applicant timely filed a Notice of Appeal along with a request for extension of time for one (1) month on July 9, 2007, currently located in the file. Note, the fee for the one month extension of time was charged on July 10, 2007.

The time period for filing an Appeal Brief after Notice of Appeal is set forth in 37 CFR§ 41.37:

> (a) (1) Appellant must file a brief under this section within two months from the date of filing the notice of appeal under § 41.31.

In accordance with 37 CFR § 1.136 - Extensions of time:

> (a) (1) If an applicant is required to reply within a nonstatutory or shortened statutory time period, applicant may extend the time period for reply up to the earlier of the expiration of any maximum period set by statute **or five months** after the time period set for reply, if a petition for an extension of time and the fee set in § 1.17(a) are filed.
>
> 37 CFR 1.136 provides for two distinct procedures to extend the period for action or reply in particular situations. The procedure which is available for use in a particular situation will depend upon the circumstances. 37 CFR 1.136(a) permits an applicant to file a petition for extension of time and a fee as set forth in 37 CFR 1.17(a) **up to 5 months** after the end of the time period set to take action except:
>
> (A) where prohibited by statute,
> (B) where prohibited by one of the items listed in the rule, or
> (C) where applicant has been notified otherwise in an Office action.

The Notice of Appeal, filed July 9, 2007, started the two-month period for response. Since the shortened time period for filing an Appeal Brief after the filing of a Notice of Appeal is not established by statute, the filing of a Reply Brief on or before February 9, 2008 (along with the appropriate extension of time under 37 CFR §1.136), would in fact be considered to be timely filed.

In view of these facts, the abandonment of the application at this time was clearly in error and has been **VACATED**. The Office regrets any inconvenience this may have caused.

The application is being forwarded to the Technology Support Staff with instructions to **WITHDRAW** the holding of abandonment. If the brief is not filed within the time designated by 37 CFR § 41.37, the applicant will be notified that the appeal stands dismissed.

Inquiries to this decision may be directed to Special Programs Examiner Brian Johnson at (571) 272-3595.

Brian L. Johnson
Quality Assurance Specialist
Technology Center 2100
Computer Architecture, Software, and Information Security

UNITED STATES PATENT AND TRADEMARK OFFICE

Commissioner for Patents
United States Patent and Trademark Office
P.O. Box 1450
Alexandria, VA 22313-1450
www.uspto.gov

BIRCH STEWART KOLASCH & BIRCH
P O BOX 747
FALLS CHURCH, VA 22040-0747

COPY MAILED

AUG 1 7 2004

OFFICE OF PETITIONS

In re Application of
Hiroaki Kitayama et al
Application No. 10/625,593
Filed: July 24, 2003
Attorney Docket No. 1422-0596P

DECISION GRANTING PETITION
UNDER 37 CFR 1.313(c)(2)

This is a decision on the petition, filed August 16, 2004, under 37 CFR 1.313(c)(2) to withdraw the above-identified application from issue after payment of the issue fee.

The petition is **GRANTED**.

The above-identified application is withdrawn from issue for consideration of a submission under 37 CFR 1.114 (request for continued examination). See 37 CFR 1.313(c)(2).

**Petitioner is advised that the issue fee paid on July 22, 2004 in the above-identified application cannot be refunded. If, however, the above-identified application is again allowed, petitioner may request that it be applied towards the issue fee required by the new Notice of Allowance.**[1]

Telephone inquiries should be directed to the undersigned at (703) 305-8680.

This matter is being referred to Technology Center AU 1755 for processing of the request for continued examination under 37 CFR 1.114 and for consideration of the concurrently filed Information Disclosure Statement.

Frances Hicks
Petitions Examiner
Office of Petitions
Office of the Deputy Commissioner
for Patent Examination Policy

---

[1] The request to apply the issue fee to the new Notice may be satisfied by completing and returning the new Issue Fee Transmittal Form PTOL-85(b), which includes the following language thereon: "Commissioner for Patents is requested to apply the Issue Fee and Publication Fee (if any) or re-apply any previously paid issue fee to the application identified above." Petitioner is advised that, whether a fee is indicated as being due or not, the Issue Fee Transmittal Form **must** be completed and timely submitted to avoid abandonment. Note the language in bold text on the first page of the Notice of Allowance and Fee(s) Due (PTOL-85).

UNITED STATES PATENT AND TRADEMARK OFFICE

Commissioner for Patents
United States Patent and Trademark Office
P.O. Box 1450
Alexandria, VA 22313-1450
www.uspto.gov

**BIRCH STEWART KOLASCH & BIRCH**
**PO BOX 747**
**FALLS CHURCH VA 22040-0747**

MAILED

FEB 19 2010

OFFICE OF PETITIONS

| | | |
|---|---|---|
| In re Patent No. 6,898,875 | : | |
| Issue Date: May 31, 2005 | : | |
| Application No. 10/625,599 | : | DECISION ON PETITION |
| Filed: July 24, 2003 | : | |
| Attorney Docket No. 4038-0117P | : | |

This is a decision on the petition under 37 CFR 1.378(c), filed February 18, 2010 to accept the unintentionally delayed payment of a maintenance fee for the above-identified patent.

The petition is **GRANTED**.

This patent expired on June 1, 2009 for failure to pay the three and one-half year maintenance fee. Since this petition was submitted within twenty-four months after the six-month grace period provided in 37 CFR 1.362(e), the petition was timely filed under the provisions of 37 CFR 1.378(c).

The maintenance fee is hereby accepted and the above-identified patent is reinstated as of the mail date of this decision.

The file does not indicate a change of address has been submitted, although the address given on the petition differs from the address of record. If appropriate, a request to change the address of record should be filed. Petitioner should note that a change of correspondence address would not affect the fee address. Therefore, if petitioner desires to receive future correspondence, which **may** be mailed regarding maintenance fees for the above-identified patent, the "fee address" and/or "customer number" forms should be submitted. While a courtesy copy of this decision is being mailed to the address given on the petition, the Office will mail all future correspondence solely to the address of record.

Telephone inquiries concerning this decision should be directed to the undersigned at (571) 272-7751.

Joan Olszewski

Joan Olszewski
Petitions Examiner
Office of Petitions

cc: Stephen M. Ruff
874 Mills Estate Place
Oveido, FL 32766

UNITED STATES PATENT AND TRADEMARK OFFICE

UNITED STATES DEPARTMENT OF COMMERCE
United States Patent and Trademark Office
Address: COMMISSIONER FOR PATENTS
P.O. Box 1450
Alexandria, Virginia 22313-1450
www.uspto.gov

| APPL NO. | FILING OR 371 (c) DATE | ART UNIT | FIL FEE REC'D | ATTY.DOCKET NO | DRAWINGS | TOT CLMS | IND CLMS |
|---|---|---|---|---|---|---|---|
| 10/625,627 | 07/24/2003 | 2834 | 750 | 01-450 | 9 | 11 | 2 |

**CONFIRMATION NO. 9051**

**CORRECTED FILING RECEIPT**

*OC000000012785754*

23400
POSZ & BETHARDS, PLC
11250 ROGER BACON DRIVE
SUITE 10
RESTON, VA 20190

Date Mailed: 05/26/2004

Receipt is acknowledged of this regular Patent Application. It will be considered in its order and you will be notified as to the results of the examination. Be sure to provide the U.S. APPLICATION NUMBER, FILING DATE, NAME OF APPLICANT, and TITLE OF INVENTION when inquiring about this application. Fees transmitted by check or draft are subject to collection. Please verify the accuracy of the data presented on this receipt. **If an error is noted on this Filing Receipt, please write to the Office of Initial Patent Examination's Filing Receipt Corrections, facsimile number 703-746-9195. Please provide a copy of this Filing Receipt with the changes noted thereon. If you received a "Notice to File Missing Parts" for this application, please submit any corrections to this Filing Receipt with your reply to the Notice. When the USPTO processes the reply to the Notice, the USPTO will generate another Filing Receipt incorporating the requested corrections (if appropriate).**

**Applicant(s)**

Shinichi Yatsuzuka, Chiryu-City, JAPAN;
Yasumasa Hagiwara, Kariya-City, JAPAN;

**Domestic Priority data as claimed by applicant**

**Foreign Applications**

JAPAN 2002-245180 08/26/2002

**If Required, Foreign Filing License Granted:** 09/05/2003

**Projected Publication Date:** Not Applicable

**Non-Publication Request:** No

**Early Publication Request:** No

**Title**

Linear electric machine

**Preliminary Class**

310

# LICENSE FOR FOREIGN FILING UNDER
# Title 35, United States Code, Section 184
# Title 37, Code of Federal Regulations, 5.11 & 5.15

**GRANTED**

The applicant has been granted a license under 35 U.S.C. 184, if the phrase "IF REQUIRED, FOREIGN FILING LICENSE GRANTED" followed by a date appears on this form. Such licenses are issued in all applications where the conditions for issuance of a license have been met, regardless of whether or not a license may be required as set forth in 37 CFR 5.15. The scope and limitations of this license are set forth in 37 CFR 5.15(a) unless an earlier license has been issued under 37 CFR 5.15(b). The license is subject to revocation upon written notification. The date indicated is the effective date of the license, unless an earlier license of similar scope has been granted under 37 CFR 5.13 or 5.14.

This license is to be retained by the licensee and may be used at any time on or after the effective date thereof unless it is revoked. This license is automatically transferred to any related applications(s) filed under 37 CFR 1.53(d). This license is not retroactive.

The grant of a license does not in any way lessen the responsibility of a licensee for the security of the subject matter as imposed by any Government contract or the provisions of existing laws relating to espionage and the national security or the export of technical data. Licensees should apprise themselves of current regulations especially with respect to certain countries, of other agencies, particularly the Office of Defense Trade Controls, Department of State (with respect to Arms, Munitions and Implements of War (22 CFR 121-128)); the Office of Export Administration, Department of Commerce (15 CFR 370.10 (j)); the Office of Foreign Assets Control, Department of Treasury (31 CFR Parts 500+) and the Department of Energy.

**NOT GRANTED**

No license under 35 U.S.C. 184 has been granted at this time, if the phrase "IF REQUIRED, FOREIGN FILING LICENSE GRANTED" DOES NOT appear on this form. Applicant may still petition for a license under 37 CFR 5.12, if a license is desired before the expiration of 6 months from the filing date of the application. If 6 months has lapsed from the filing date of this application and the licensee has not received any indication of a secrecy order under 35 U.S.C. 181, the licensee may foreign file the application pursuant to 37 CFR 5.15(b).

UNITED STATES PATENT AND TRADEMARK OFFICE

COMMISSIONER FOR PATENTS
UNITED STATES PATENT AND TRADEMARK OFFICE
P.O. BOX 1450
ALEXANDRIA, VA 22313-1450
www.uspto.gov

RABIN & BERDO, PC
1101 14TH STREET, NW
SUITE 500
WASHINGTON, DC 20005

**COPY MAILED**

NOV 17 2005

**OFFICE OF PETITIONS**

| | | |
|---|---|---|
| In re Application of | : | |
| Johnnie Mae Harrison | : | DECISION ON PETITION |
| Application No. 10/625,641 | : | TO MAKE SPECIAL UNDER |
| Filed: July 24, 2003 | : | 37 CFR 1.102(c)(1) |
| Attorney Docket No. HAR 101 | : | |

This is a decision on the petition under 37 CFR 1.102(c)(1), filed October 24, 2005, to make the above-identified application special based on applicant's age as set forth in M.P.E.P. § 708.02, Section IV.

The petition is **GRANTED**.

A grantable petition to make an application special under 37 CFR 1.102(c)(1) and MPEP § 708.02, Section IV: Applicant's Age must be accompanied by evidence showing that at least one of the applicants is 65 years of age, or more, such as a birth certificate or a statement by applicant. No fee is required

The instant petition includes copies of birth certificate, a letter from Metropolitan Insurance Company, and a statement by Johnnie Mae Harrison attesting that she is over 65 years of age. Accordingly, the above-identified application has been accorded "special" status.

Telephone inquiries concerning this decision should be directed to Wan Laymon at 571-272-3220.

All other inquiries concerning either the examination or status of the application should be directed to the Technology Center.

This matter is being referred to Technology Center AU 1616 for action on the merits commensurate with this decision.

David Bucci
Petitions Examiner
Office of Petitions

UNITED STATES PATENT AND TRADEMARK OFFICE

Commissioner for Patents
United States Patent and Trademark Office
P.O. Box 1450
Alexandria, VA 22313-1450
www.uspto.gov

**LEONG C LEI**
**PMB #1008**
**1867 YGNACIO VALLEY ROAD**
**WALNUT CREEK, CA 94598**

COPY MAILED

SEP 0 7 2005

OFFICE OF PETITIONS

| | | |
|---|---|---|
| In re Application of | : | |
| Chia Pao Cheng | : | |
| Application No. 10/625,660 | : | ON PETITION |
| Filed: July 24, 2003 | : | |
| Attorney Docket No. FP9653 | : | |

This is a decision on the petition filed February 1, 2005, which is being treated as a petition under 37 CFR 1.181, to withdraw the holding of abandonment of the above-identified application. This is also in response to the petition under 37 CFR 1.137(b) filed June 6, 2005.

The petition under 37 CFR 1.181 is **DISMISSED**.

The petition under 37 CFR 1.137(b) is **GRANTED**.

The above-identified application became abandoned for failure to reply in a timely manner to the non-final Office action mailed May 12, 2004, which set a shortened statutory period for reply of three (3) months. No extensions of time under the provisions of 37 CFR 1.136(a) were obtained. Accordingly, the above-identified application became abandoned on August 13, 2004.

## ANALYSIS OF PETITION TO WITHDRAW THE HOLDING OF ABANDONMENT

Petitioner alleges that he did not receive the May 12, 2004 non-final Office action.

A review of the file record discloses that the address to which the Office action of May 12, 2004 was mailed is the address designated in the declaration filed with the application. Since all correspondence is mailed solely to the address designated by an applicant, no error is seen on the part of the USPTO in the mailing of the Office action of May 12, 2004. Further, there is no indication that the Office action was returned to the USPTO as undeliverable. Therefore, absent evidence to the contrary, it is presumed that the Office action was correctly delivered to the address of record at the time of its mailing.

Additionally, petitioner has not established nonreceipt, since petitioner did not include a statement from applicant (to whom the Office action of May 12, 2004 was mailed) in accordance with the guidelines set out in MPEP 711.03(c)), Section A. Petitioner is reminded that this application

was filed without a power of attorney. At the time of mailing the Office action, counsel had not been given any authority by the applicant, or any other party, with respect to this application.

In view of the above, the holding of abandonment will not be withdrawn.

**ANALYSIS OF PETITION UNDER 37 CFR 1.137(b)**

The petition satisfies the conditions for revival pursuant to the provisions of 37 CFR 1.137(b) in that (1) the reply (amendment); (2) the petition fee; and (3) the required statement of unintentional delay have been received. Accordingly, the reply to the Office action of May 12, 2004 is accepted as having been unintentionally delayed.

Telephone inquiries concerning this decision should be directed to Wan Laymon at (571) 272-3220.

This matter is being referred to Technology Center AU 3738.

Frances Hicks

Frances Hicks
Lead Petitions Examiner
Office of Petitions
Office of the Deputy Commissioner
for Patent Examination Policy

UNITED STATES PATENT AND TRADEMARK OFFICE

Commissioner for Patents
United States Patent and Trademark Office
P.O. Box 1450
Alexandria, VA 22313-1450
www.uspto.gov

Paper No.

Amin, Turocy & Calvin LLP
127 Public Square
57th Floor, Key Tower
Cleveland OH 44114

COPY MAILED

NOV 18 2008

OFFICE OF PETITIONS

| | | |
|---|---|---|
| In re Application of<br>Alexander Gantman et al.<br>Application No. 10/625,710<br>Filed: July 22, 2003<br>Attorney Docket Number:<br>030464B1/QUALP1020USB<br>Title: DIGITAL AUTHENTICATION<br>OVER ACOUSTIC CHANNEL | :<br>:<br>:<br>:<br>:<br>:<br>:<br>: | DECISION ON PETITION<br>PURSUANT TO<br>37 C.F.R. § 1.137(B) |

This is a decision on the petition pursuant to 37 C.F.R. § 1.137(b), filed June 30, 2008, to revive the above-identified application.

Receipt of the concurrently submitted terminal disclaimer to obviate a non-statutory double patenting rejection, along with the associated fee, is acknowledged.

This petition pursuant to 37 C.F.R. § 1.137(b) is **GRANTED**.

The above-identified application became abandoned for failure to reply in a timely manner to the non-final Office action, mailed November 20, 2007, which set a shortened statutory period for reply of three months. No response was received, and no extensions of time under the provisions of 37 C.F.R. § 1.136(a) were requested. Accordingly, the above-identified application became abandoned on February 21, 2008. A notice of abandonment was mailed on May 30, 2008.

A grantable petition pursuant to 37 C.F.R. § 1.137(b) must be accompanied by:

(1) The reply required to the outstanding Office action or notice, unless previously filed;
(2) The petition fee as set forth in 37 C.F.R. § 1.17(m);
(3) A statement that the entire delay in filing the required reply from the due date for the reply until the filing of a grantable petition pursuant to this paragraph was unintentional. The Commissioner may require additional information where there is a question whether the delay was unintentional, and;
(4) Any terminal disclaimer (and fee as set forth in 37 C.F.R. § 1.20(d)) required pursuant to paragraph (d) of this section.

With this petition, Petitioner has submitted the petition fee, an amendment, and the proper statement of unintentional delay. A terminal disclaimer disclaiming a terminal part of the term of any patent granted thereon equivalent to the period of abandonment of the application is not required. As such, the first three requirements of Rule 1.137(b) have been met. The fourth requirement is not applicable.

The Technology Center will be notified of this decision. The Technology Center's support staff will notify the Examiner of this decision, so that the amendment that was received on June 30, 2008 can be processed.

Petitioner may find it beneficial to view Private PAIR within a fortnight of the present decision to ensure that the revival has been acknowledged by the Technology Center in response to this decision. It is noted that all inquiries with regard to any failure of that change in status should be directed to the Technology Center where that change of status must be effected - **the Office of Petitions cannot effectuate a change of status.**

It is noted that the address listed on the petition differs from the address of record. The application file does not indicate a change of correspondence address has been filed in this case, although the address given on the petition differs from the address of record. If Petitioner desires to receive future correspondence regarding this application, the change of correspondence address must be submitted. A courtesy copy of this decision will be mailed to Petitioner. However, all future

correspondence will be directed to the address of record until such time as appropriate instructions are received to the contrary. Petitioner will not receive future correspondence related to this application unless Change of Correspondence Address, Patent Form (PTO/SB/122) is submitted for the above-identified application. For Petitioner's convenience, a blank Change of Correspondence Address, Patent Form (PTO/SB/122), may be found at http://www.uspto.gov/web/forms/sb0122.pdf.

Telephone inquiries regarding *this decision* should be directed to the undersigned at (571) 272-3225[1]. All other inquiries concerning examination procedures or status of the application should be directed to the Technology Center.

/Paul Shanoski/
Paul Shanoski
Senior Attorney
Office of Petitions

cc: Amin, Turocy & Calvin LLP
24th Floor, National City Center
1900 E. 9th Street
Cleveland, Ohio 44114

1 Petitioner will note that all practice before the Office should be in writing, and the action of the Office will be based exclusively on the written record in the Office. See 37 C.F.R. § 1.2. As such, Petitioner is reminded that no telephone discussion may be controlling or considered authority for Petitioner's further action(s).

UNITED STATES PATENT AND TRADEMARK OFFICE

COMMISSIONER FOR PATENTS
UNITED STATES PATENT AND TRADEMARK OFFICE
P.O. BOX 1450
ALEXANDRIA, VA 22313-1450
www.uspto.gov

APR 01 2004

ERNEST D BUFF & ASSOCIATES, LLC
245 SOUTH ST
MORRISTOWN NJ 07960

| | | |
|---|---|---|
| In re Application of | : | |
| Joseph Skiba | : | |
| Serial No.: 10/625,715 | : | DECISION ON PETITION |
| Filed: July 22, 2003 | : | |
| For: Lightweight Impact Resistant Helmet System | : | |

This is in response to the petition applicant filed on September 22, 2003 to make the above-identified application special under the provisions of 37 CFR 1.102(d).

Applicant has satisfied the provisions set forth in M.P.E.P. 708.02, VIII, thus the petition is **GRANTED**.

The application will be forwarded to the examiner for action on the merits commensurate with this decision.

Should there be any questions with regard to this letter please contact John Kittle by letter addressed to the Director, Technology Center 3700/2900, P.O. Box 1450 Alexandria, VA 22313-1450, or by telephone at (703) 308-0873 or by facsimile transmission at (703) 308-3139.

John E. Kittle
Director
Technology Center 3700/2900

## SPE RESPONSE FOR CERTIFICATE OF CORRECTION

DATE : 5/18/09 Paper No.: —

TO SPE OF : ART UNIT 2621

SUBJECT : Request for Certificate of Correction for Appl. No.: 10/625735 Patent No.: 7502548 B2

Please respond to this request for a certificate of correction within 7 days.

**FOR IFW FILES:**

Please review the requested changes/corrections as shown in the **COCIN** document(s) in the IFW application image. No new matter should be introduced, nor should the scope or meaning of the claims be changed.

Please complete the response (see below) and forward the completed response to scanning using document code **COCX**.

**FOR PAPER FILES:**

Please review the requested changes/corrections as shown in the attached certificate of correction. Please complete this form (see below) and forward it with the file to:

**Certificates of Correction Branch (C of C)**
**Randolph Square 9D62-B**
**Palm Location 7580**

item # 30

Virginia Tolbert
**Certificates of Correction Branch**
**703-756-1591**

**Thank You For Your Assistance**

**The request for issuing the above-identified correction(s) is hereby:**
Note your decision on the appropriate box.

- [X] **Approved** — All changes apply.
- [ ] **Approved in Part** — Specify below which changes **do not** apply.
- [ ] **Denied** — State the reasons for denial below.

**Comments:** _____

THAI Q. TRAN
SUPERVISORY PATENT EXAMINER
TECHNOLOGY CENTER 2600

**SPE**

2621
**Art Unit**

UNITED STATES PATENT AND TRADEMARK OFFICE

Commissioner for Patents
United States Patent and Trademark Office
P.O. Box 1450
Alexandria, VA 22313-1450
www.uspto.gov

John S. Kendall
Davis & Kendall
Suite 626
188 W. Randolph
Chicago, IL 60601

COPY MAILED
OCT 10 2006
OFFICE OF PETITIONS

| | | |
|---|---|---|
| In re Application of<br>Latreice Woody<br>Application No. 10/625,744<br>Filed: July 23, 2003<br>Attorney Docket No. LW001 | :<br>:<br>:<br>:<br>: | DECISION ON PETITION |

This is a decision on the petition under 37 CFR 1.137(b), filed February 24, 2006, to revive the above-identified application.

This application became abandoned for failure to reply timely to the Notice to File Corrected Application Papers mailed on December 3, 2003, which set a two-month extendable period to respond. Petitioner did not obtain any extensions of time under 37 CFR 1.136(a). Accordingly, this application became abandoned on February 4, 2004.

The petition is granted.

This application is being forwarded to the Office of Initial Patent Examination for further processing.

Telephone inquiries specifically concerning this decision should be directed to the undersigned at (571) 272-3211.

C. T. Donnell

Christina Tartera Donnell
Senior Petitions Attorney
Office of Petitions

UNITED STATES PATENT AND TRADEMARK OFFICE

Commissioner for Patents
United States Patent and Trademark Office
P.O. Box 1450
Alexandria, VA 22313-1450
www.uspto.gov

Vela Pharmaceuticals
3528 Old Baptist Rd.
Collegeville PA 19426

COPY MAILED

JUN 17 2004

OFFICE OF PETITIONS

In re Application of :
Leventer et al. : DECISION ON PETITION
Application No. 10/625,754 :
Filed: July 23, 2003 :
Attorney Docket No. JAN-27 CON1 :

This is a decision on the petition filed May 19, 2004, requesting that the above-identified application be accorded a filing date of July 23, 2003, instead of the current filing date of April 19, 2004.

On July 23, 2003, applicants deposited the above-identified application. However, on April 1, 2004, the Office of Initial Patent Examination mailed a "Notice Of Incomplete Application" requiring drawings of applicants' invention and stating that the filing date would be the date of receipt of the omitted drawings. It is noted that the specification filed on July 23, 2003, describes drawings containing Figures 1-6, but no drawings were filed on July 23, 2003.

On April 19, 2004, in response to the Notice, applicants filed a second declaration and 6 sheets of drawings (Figures 1-6). Thereafter, the Office of Initial Patent Examination accorded the application a filing date of April 19, 2004, the date of receipt of the drawings.

On May 19, 2004, applicants filed the present petition and a $130.00 petition fee, requesting a change in the filing date from April 19, 2004 to July 23, 2003. Applicants admitted that the application was deposited without drawings on July 23, 2003. However, Applicants asserted that the drawings did not add new matter to the application.

As stated in MPEP § 601.01(f), it is the practice of the United States Patent and Trademark Office (Office) to treat an

application that contains at least one process or method claim as an application for which a drawing is not necessary for an understanding of the invention under 35 U.S.C. 113 (first sentence).

MPEP § 601.01(f) also states that:

> A nonprovisional application having at least one claim, or a provisional application having at least some disclosure, directed to the subject matter discussed above for which a drawing is usually not considered essential for a filing date, describing drawing figure(s) in the specification, but filed without drawings will be treated as an application filed without all of the drawing figures referred to in the specification as discussed in MPEP § 601.01(g), so long as the application contains something that can be construed as a written description and the names of all the inventors.

This application contains method claims. Therefore, the application should have been treated as an application filed without all of the drawing figures referred to in the specification as discussed in MPEP § 601.01(g).

MPEP § 601.01(g) states that if an application is filed without all of the drawing figure(s) referred to in the specification, a "Notice of Omitted Item(s)" is mailed indicating that the application has been accorded a filing date, but is lacking some of the figures of drawings described in the specification.

In view of the above, the requirement for drawings as set forth in the "Notice of Incomplete Application" of April 1, 2004, was mailed in error and is hereby withdrawn.

The application will be accorded a filing date of July 23, 2003, because drawings were not necessary to obtain a filing date. Accordingly, the petition is **granted**. The application will be accorded a filing date of July 23, 2003, without any drawings.

The issue of new matter is a determination for the examiner. Applicants may wish to file an amendment requesting entry of Figures 1-6.

The $130.00 petition fee is unnecessary and will be refunded by treasury check.

The Office of Initial Patent Examination is directed to accord the above-identified application a filing date of July 23, 2003, without any drawings, and to mail a corrected filing receipt.

Any inquiries related to this decision should be directed to the undersigned at (703) 306-5589.

Christina Tartera Donnell

Christina Tartera Donnell
Senior Petitions Attorney
Office of Petitions

UNITED STATES PATENT AND TRADEMARK OFFICE

Commissioner for Patents
United States Patent and Trademark Office
P.O. Box 1450
Alexandria, VA 22313-1450
www.uspto.gov

DONALD R. SCHOONOVER
4211 ROLLING HILLS DRIVE
NIXA, MO 65714-8771

MAILED

MAR 2 9 2010

OFFICE OF PETITIONS

In re Patent No. 6,923,563 :
Issue Date: August 2, 2005 :
Application No. 10/625,760 :
Filed: July 24, 2003 :
Attorney Docket No. 1857294 :

ON PETITION

This is a decision on the petition under 37 CFR 1.378(b), filed November 27, 2009, to accept the unavoidably delayed payment of a maintenance fee for the above-identified patent.

The petition is **DISMISSED**.

The patent issued August 2, 2005. The first (3 ½ year) maintenance fee was due August 2, 2008 and could have been paid from August 2, 2008 thru February 2, 2009 or with a surcharge during the period of February 2, 2009 thru August 2, 2009. Accordingly, the patent expired at midnight August 2, 2009, for failure to submit the first maintenance fee.

A petition to accept the delayed payment of a maintenance fee under 35 USC 41(c) and 37 CFR 1.378(b) must be accompanied by (1) an adequate showing that the delay was unavoidable, since reasonable care was taken to insure that the maintenance fee would be paid timely, (2) payment of the appropriate maintenance fee, unless previously submitted, and (3) payment of the surcharge set forth in 37 CFR 1.20(i)(1). This petition lacks item (1) above.

Petitioner asserts that Patent owner was contacted by the "Patent Center" to make payment for the 3 ½ year maintenance fee. Petitioner also states that believing the "Patent Center" to be legitimate he paid them $425 and all attempts to contact the Patent Center with regards to the payment of the fee to the USPTO were unsuccessful and thus the reason for the unavoidably delayed payment of the maintenance fee is the failure of the "Patent Center" to submit the Maintenance Fee to the USPTO.

The showing of record is inadequate to establish unavoidable delay within the meaning of 37 CFR 1.378(b)(3).

37 CFR 1.378(b)(3) states that any petition to accept delayed payment of a maintenance fee must include:

> "A showing that the delay was unavoidable since reasonable care was taken to ensure that the maintenance fee would be paid timely and that the petition was filed promptly after the patentee was notified of, or otherwise became aware of, the expiration of the patent. The showing must enumerate the steps taken to ensure timely payment of the maintenance fee, the date, and the

> manner in which patentee became aware of the expiration of the patent, and the steps taken to file the petition promptly."

As 35 USC § 41(b) requires the payment of fees at specified intervals to maintain a patent in force, rather than some response to a specific action by the Office under 35 USC § 133, a reasonably prudent person in the exercise of due care and diligence would have taken steps to ensure the timely payment of such maintenance fees. Ray v. Lehman, 55 F.3d 606, 609, 34 USPQ2d 1786, 1788 (Fed. Cir. 1995) (quoting In re Patent No. 4,409,763, 7 USPQ2d 1798, 1800 (Comm'r Pat. 1988), aff'd dub nom. That is, an adequate showing that the delay in payment of the maintenance fee at issue was "unavoidable" within the meaning of 35 U.S.C. § 41(c) and 37 CFR 1.378(b)(3) requires a showing of the steps taken by the responsible party to ensure the timely payment of the maintenance fee for this patent. Id.

As the patent holder at the time of expiration, it was incumbent on petitioner to have itself docketed this patent for payment of the maintenance fee in a reliable system as would be employed by a prudent and careful person with respect to his most important business, or to have engaged another for that purpose. See California Medical Products v. Technol Med. Prod., 921 F.Supp. 1219, 1259 (D.Del. 1995). Even where another has been relied upon to pay the maintenance fees, such asserted reliance per se does not provide a petitioner with a showing of unavoidable delay within the meaning of 37 CFR § 1.378(b) and 35 USC § 41(c). Id. Rather, such reliance merely shifts the focus of the inquiry from the petitioner to whether the obligated party acted reasonably and prudently. Id. Nevertheless, a petitioner is bound by any errors that may have been committed by the obligated party. Id.

However, the record fails to show that adequate steps within the meaning of 37 CFR 1.378(b)(3) were taken by or on behalf of petitioner to schedule or pay the maintenance fee. Petitioner is reminded that 37 CFR 1.378(b)(3) is a validly promulgated regulation, as is the requirement therein for petitioner's showing of the steps taken to pay the fee. Ray, 55 F.3d at 609, 34 USPQ2d at 1788. In the absence of a showing of the steps taken by or on behalf of petitioner, 37 CFR 1.378(b)(3) precludes acceptance of the maintenance fee.

Furthermore, the Letters Patent contains a Maintenance Fee Notice that warns that the patent may be subject to maintenance fees if the application was filed on or after December 12, 1980. Accordingly, a reasonably prudent patentee would have inquired to see if his/her patent was subject to maintenance fees.

The record fails to disclose that the patentee took reasonable steps to ensure timely payment of the maintenance fee. In fact, the record indicates that no steps were taken by patentee to ensure timely payment of the maintenance fee. Since no steps were taken by patentee, 37 CFR 1.378(b) precludes acceptance of the delayed payment of the maintenance fee.

Petitioner is advised, however, that the USPTO is not the forum for resolving a dispute between a patent owner and his representative as to who bore the responsibility for paying a maintenance fee. See Ray, 55 F. 3d at 610, 34 USPQ2d at 1789.

The statement of delay is not acceptable. In this regard, petitioner's attention is directed to 37 CFR 1.33(b), which states.

> (b) Amendments and other papers. Amendments and other papers, except for written assertions pursuant to § 1.27(c)(2)(ii) of this part, filed in the application must be signed by:
> (1) A registered patent attorney or patent agent of record appointed in compliance with § 1.32(b);

(2) A registered patent attorney or patent agent not of record who acts in a representative capacity under the provisions of § 1.34;

(3) An assignee as provided for under §3.71(b) of this chapter; or

(4) All of the applicants (§ 1.41(b)) for patent, unless there is an assignee of the entire interest and such assignee has taken action in the application in accordance with § 3.71 of this chapter.

An unsigned amendment (or other paper) or one not properly signed by a person having authority to prosecute the application is not entered. This applies, for instance, where the amendment (or other paper) is signed by only one of two applicants and the one signing has not been given a power of attorney by the other applicant.

Therefore, as the petition is not signed by all the inventors and the record herein fails to disclose that petitioner herein (James O. Barber) was ever given a power of attorney to act on behalf of inventor Barbara A. Barber, or that he is an assignee of the entire interest and has complied with the provisions of 37 CFR 3.73(b), the petition is considered to not contain a proper statement of unavoidable delay.

Petitioner will not receive future correspondence related to maintenance fees for the patent unless a "Fee Address" Indication Form (see PTO/SB/47) and Request for Customer Number (see PTO/SB/125) are submitted

If reconsideration of this decision is desired, a petition for reconsideration under 37 CFR 1.378(e) must be filed within **TWO (2) MONTHS** from the mail date of this decision. No extension of this 2-month time limit can be granted under 37 CFR 1.136(a) or (b). Any such petition for reconsideration **must be accompanied by the petition fee of $400 as set forth in 37 CFR 1.17(f)**. The petition for reconsideration should include an exhaustive attempt to provide the lacking item(s) noted below, since, after a decision on the petition for reconsideration, the Director will undertake no further reconsideration or review of the matter.

Further correspondence with respect to this matter should be addressed as follows:

By Mail:
Mail Stop PETITION
Commissioner for Patents
Post Office Box 1450
Alexandria, VA 22313-1450

By Hand:
U. S. Patent and Trademark Office
Customer Service Window, Mail Stop Petitions
Randolph Building
401 Dulany Street
Alexandria, VA 22314

The centralized facsimile number is (571) 273-8300.

Telephone inquiries regarding this decision should be directed to April M. Wise at (571) 272-1642.

/dab/
David Bucci
Petitions Examiner
Office of Petitions

Attachment: blank copy of PTO/SB/66 Petition to Accept Unintentionally Delayed Payment of Maintenance Fee

cc: JIM BARBER
2245 W. WEBBWOOD ROAD
RUVERTIN, WY 82501-9407

UNITED STATES PATENT AND TRADEMARK OFFICE

Commissioner for Patents
United States Patent and Trademark Office
P.O. Box 1450
Alexandria, VA 22313-1450
www.uspto.gov

**COPY MAILED**

JUL 1 4 2009

**OFFICE OF PETITIONS**

**DLA Piper LLP (US)**
**2000 University Avenue**
**East Palo Alto, CA 94303-2248**

| | | |
|---|---|---|
| In re Application of | : | |
| Alan Lippman et al. | : | |
| Application No. 10/625,764 | : | DECISION ON PETITION |
| Filed: July 22, 2003 | : | |
| Attorney Docket No. 353692-991110 | : | |

This is a decision on the petition under the unintentional provisions of 37 CFR 1.137(b), filed May 6, 2009, to revive the above-identified application.

The petition is **GRANTED**.

The application became abandoned as a result of petitioner's failure to file an appeal brief (and fee required by 37 CFR 41.20(b)(2)) within the time period provided in 37 CFR 41.37(a)(1). As an appeal brief (and appeal brief fee) was not filed within two (2) months of the Notice of Appeal filed September 4, 2008, and no extensions of time under the provisions of 37 CFR 1.136(a) were obtained, the appeal was dismissed and the proceedings as to the rejected claims were terminated. See 37 CFR 41.37(b). As no claim was allowed, the application became abandoned on November 5, 2008. See MPEP 1215.04. A Notice of Abandonment was mailed on March 31, 2009.

The petition satisfies the requirements of 37 CFR 1.137(b) in that petitioner has supplied (1) the reply in the form of a RCE, with the required fee of $405, (2) the petition fee of $810, and (3) a proper statement of unintentional delay. Accordingly the RCE is accepted as being unintentionally delayed.

Telephone inquiries concerning this decision should be directed to Kimberly Inabinet at (571) 272-4618.

This application is being referred to the Technology Center AU 2457 for appropriate action in the normal course of business for processing of the Appeal Brief received May 6, 2009.

Carl Friedman
Petitions Examiner
Office of Petitions

UNITED STATES PATENT AND TRADEMARK OFFICE

Commissioner for Patents
United States Patent and Trademark Office
P.O. Box 1450
Alexandria, VA 22313-1450
www.uspto.gov

Paper No. 52505

OLIFF & BERRIDGE, PLC
P.O. Box 19928
Alexandria, VA 22320

MAY 27 2005

In re Application of:
Masahiko Sasa
Serial No.: 10/625,773
Filed: July 24, 2003
Attorney Docket No.: **116570**

NOTICE OF WITHDRAWAL
FROM ISSUE
UNDER 37 CFR § 1.313

The purpose of this communication is to inform you that the above-identified application is being withdrawn from issue pursuant to 37 CFR § 1.313.

The above-identified application is hereby withdrawn from issue. The Notice of Allowance and Issue Fee Due and the Notice of Allowability mailed February 28, 2005, are hereby vacated.

The application is being withdrawn to permit reopening of prosecution. The reasons therefor will be communicated to you by the examiner in the next Office action.

Upon receipt of a new Notice of Allowance and Issue Fee Due, applicant may request that any previously submitted issue fee be applied toward payment of the issue fee in the amount identified on the new Notice of Allowance and Issue Fee Due. If the application is abandoned, applicant may request either a refund, or a credit to a Deposit Account.

Telephone inquires should be directed to Dave Talbott at (571) 272-1934.

The above-identified application is being forwarded to the examiner for prompt appropriate action.

Howard N. Goldberg, Director
Technology Center 2800
Semiconductors, Electrical and Optical
Systems and Components

UNITED STATES PATENT AND TRADEMARK OFFICE

Commissioner for Patents
United States Patent and Trademark Office
P.O. Box 1450
Alexandria, VA 22313-1450
www.uspto.gov
DIW Mar-09

OLIFF & BERRIDGE, PLC
P.O. BOX 320850
ALEXANDRIA VA 22320-4850

MAILED

MAR 19 2009

OFFICE OF PETITIONS

| | | |
|---|---|---|
| In re Application of | : | |
| Yoshinari Morimoto | : | DECISION ON PETITION TO |
| Application Number: 10/625778 | : | WITHDRAW HOLDING OF |
| Filing Date: 07/24/2003 | : | ABANDONMENT |
| Attorney Docket Number: 116571 | : | |

This is a decision on the petition to withdraw the holding of abandonment filed on February 3, 2009.

The petition is **GRANTED**.

On November 26, 2008, a decision by the Board of Patent Appeals and Interferences was rendered, affirming the examiner's decision rejecting the appealed claims.

On January 26, 2009, a Request for Continued Examination (RCE) was filed, along an amendment as the required submission under 37 CFR 1.114. The RCE fee was also paid.

On January 27, 2009, a Notice of Abandonment was mailed, stating that the application was abandoned because the period for seeking court review of the decision had expired and there are no allowed claims.

On February 3, 2009, the present petition was filed, accompanied by a copy of the RCE and submission.

Petitioners assert, in the present petition, that the Notice of Abandonment was mailed in error, as the RCE and submission were timely filed in response to the board decision.

Upon review, petitioners' argument is well taken.

MPEP 706.07(h) section (XI)(A) states in pertinent part that the filing of an RCE (accompanied by the fee and a submission) after

a decision by the Board of Patent Appeals and Interferences, but before the filing of a Notice of Appeal to the Court of Appeals for the Federal Circuit (Federal Circuit) or the commencement of a civil action in federal district court, will result in the finality of the rejection or action being withdrawn and the submission being considered. Generally, the time period for filing a notice of appeal to the Federal Circuit or for commencing a civil action is within two months of the Board's decision. See 37 CFR 1.304[1] and MPEP § 1216. Thus, an RCE filed within this two month time period and before the filing of a notice of appeal to the Federal Circuit or the commencement of a civil action would be timely filed.

Furthermore, 37 CFR 1.198 states:

> When a decision by the Board of Patent Appeals and Interferences on appeal has become final for judicial review, prosecution of the proceeding before the primary examiner will not be reopened or reconsidered by the primary examiner except under the provisions of § 1.114 or § 41.50 of this title without the written authority of the Director, and then only for the consideration of matters not already adjudicated, sufficient cause being shown.

As such, applicant was entitled to a two (2) month time period after the date the board decision was mailed to file a response to the board decision.

As such, the showing of record is that the RCE and submission under 37 CFR 1.114 filed on January 26, 2009, were a timely and proper response to the board decision mailed on November 26, 2008.

Therefore, there is no abandonment in fact. The holding of abandonment is <u>withdrawn</u>. The Notice of Abandonment is <u>vacated</u>.

---

[1] 37 CFR 1.304(a) states:

> (1) The time for filing the notice of appeal to the U.S. Court of Appeals for the Federal Circuit (§ 1.302) or for commencing a civil action (§ 1.303) is two months from the date of the decision of the Board of Patent Appeals and Interferences. If a request for rehearing or reconsideration of the decision is filed within the time period provided under § 41.52(a), § 41.79(a), or § 41.127(d) of this title, the time for filing an appeal or commencing a civil action shall expire two months after action on the request.

The application is referred to Technology Center Art Unit 2853 for further processing.

Telephone inquiries concerning this matter may be directed to the undersigned at (571)272-3231.

D Wood

Douglas I. Wood
Senior Petitions Attorney
Office of Petitions

71

22122878-70

In re Application of: Anthony C. Zuppero et al. Art Unit: 1753

Serial No.: Not Yet Known 10/625801 Examiner: Diamond, Alan D.

Filing Date: July 23, 2003 Date: July 23, 2003

TITLE: **GAS SPECIE ELECTRON-JUMP CHEMICAL ENERGY CONVERTER**

Mail Stop Patent Application
Commissioner for Patents
P.O. Box 1450
Alexandria, VA 22313-1450

**PETITION TO MAKE SPECIAL UNDER THE ENERGY PROGRAM**
**(37 C.F.R. 1.102(c) AND M.P.E.P. 708.02, VI)**

SIR:

Applicants hereby petition to make the above-identified application special for an invention that materially contributes to the development or conservation of energy resources and significantly benefits the environment.

The present application discloses methods and apparatus for the conversion of chemical energy of fuels and oxidizers such as hydrogen, ethanol and methanol or hydrocarbons directly into electrical energy or other useful forms, and does so in a compact and efficient manner, and specifically when applied to transportation.

The mass required to develop a given net electric power can be as much as an order of magnitude less than that of an internal combustion engine. This reduction in "engine" mass translates

CERTIFICATE OF TRANSMISSION

I hereby certify that this correspondence is being deposited with the United States Postal Service as "Express Mail Post Office to Addressee" service under 37 CFR § 1.10 on the date indicated below and is addressed to Commissioner for Patents, Alexandria, VA 22313-1450.
Date of Deposit: July 23, 2003; Express Mail label number: EJ622915761US.

Eunhee Park
Eunhee Park (Reg. No. 42,976)

[NYC] 406061.1

PETITION GRANTED

Richard Crispino
Special Program Examiner
Technology Center 1700 JUN 28 2005

UNITED STATES PATENT AND TRADEMARK OFFICE

COMMISSIONER FOR PATENTS
UNITED STATES PATENT AND TRADEMARK OFFICE
P.O. BOX 1450
ALEXANDRIA, VA 22313-1450
www.uspto.gov
DIW Dec-05

HEWLETT-PACKARD COMPANY
INTELLECTUAL PROPERTY ADMINISTRATION
P. O. BOX 272400
FORT COLLINS CO 80527-2400

COPY MAILED

DEC 0 1 2005

OFFICE OF PETITIONS

| | | |
|---|---|---|
| In re Application of | : | |
| Winthrop D. Childers | : | |
| Application No. 10/625,813 | : | ON PETITION |
| Filed: 22 July, 2003 | : | |
| Atty Docket No. 10008113-4 | : | |

This is a decision on the petition filed under 37 CFR 1.182 on 23 September, 2005, requesting that terminal disclaimer(s) filed in Application No. 10/625,813 be withdrawn.

The petition is **dismissed**.

The present petition requests that three (3) terminal disclaimers filed in the above-identified application on 6 May, 2005, be withdrawn.

The petition is dismissed because the remarks filed with the petition to withdraw the terminal disclaimers explicitly point out that the applicant requests withdrawal of the terminal disclaimers in order to reopen issues pertaining to obviousness-type double patenting rejections. Petitions seeking to reopen the question of the propriety of the double patenting rejection that prompted the filing of the terminal disclaimer have not been favorably considered.[1] As such, the present petition will not be favorably considered.

The petition fee of $400.00 will be assessed to counsel's deposit account, No. 50-2100.

[1] MPEP 1490(VII)(A).

There is no indication that petitioner herein was ever empowered to prosecute the instant application. If petitioner desires to receive future correspondence regarding this application, the appropriate power of attorney documentation must be mailed. A courtesy copy of this decision will be mailed to petitioner. However, all future correspondence will be directed to the address of record until such time as appropriate instructions are received to the contrary.

Further correspondence with respect to this matter should be addressed as follows:

By mail: Mail Stop Petition
Commissioner for Patents
P.O. Box 1450
Alexandria, VA 22313-1450

By FAX: (571) 273-8300
Attn: Office of Petitions

By hand: Customer Service Window
Mail Stop Petition
Randolph Building
401 Dulany Street
Alexandria, VA 22314

The application is being referred to Technology Center Art Unit 1734 for further processing.

Telephone inquires should be directed to the undersigned at 571.272.3231.

D Wood
Douglas Wood
Senior Petitions Attorney
Office of Petitions

cc: JULIE CHURCH DIERKER
DIERKER & ASSOCIATES, P.C.
3331 WEST BIG BEAVER, SUITE 109
TROY MI 48084-2813

UNITED STATES PATENT AND TRADEMARK OFFICE

COMMISSIONER FOR PATENTS
UNITED STATES PATENT AND TRADEMARK OFFICE
P.O. BOX 1450
ALEXANDRIA, VA 22313-1450
www.uspto.gov

COPY MAILED
DEC 0 6 2006
OFFICE OF PETITIONS

NEUROPACE, INC.
1375 SHOREBIRD WAY
MOUNTAIN VIEW, CA 94043

| | | |
|---|---|---|
| In re Application of | : | |
| Benjamin D. Pless, et al. | : | |
| Application No. 10/625,829 | : | ON PETITION |
| Filed: July 22, 2003 | : | |
| Docket No. N09-03 | : | |

This is a decision on the petition filed May 16, 2006, under 37 CFR 1.137(b) to revive the above-identified application for copendency with a continuing application.

There is no indication that the person signing the instant petition was ever given a power of attorney or authorization of agent to prosecute the above-identified application. However, in accordance with 37 CFR 1.34(a), the signature of Mika Mayer appearing on the petition shall constitute a representation to the United States Patent and Trademark Office that he is authorized to represent the particular party on whose behalf he acts. However, if Mr. Mayer desires to receive future correspondence regarding this application, the appropriate power of attorney or authorization of agent must be submitted. A courtesy copy of this decision is being mailed to petitioner. Nevertheless, all future correspondence regarding this application file will be directed solely to the address of record.

The petition is **GRANTED**.

This application became abandoned for a failure to respond to a non-final Office action mailed May 26, 2004. A Notice of Abandonment was subsequently mailed on February 8, 2005.

The application is being revived solely for purposes of continuity with Application No. 11/436,189 filed May 16, 2006. As continuity has been established by this decision reviving the above-identified application, the application is again abandoned in favor of continuing application No. 11/436,189.

Extensions of time under 37 CFR 1.136 are available only if asked for "prior to or with the response." In no case, however, may an applicant respond later than the maximum time period set by statute. Accordingly, if the question of abandonment arises when the provisions of 37 CFR 1.136 can no longer be used, then the application is abandoned when the unextended time for response has expired. Therefore, no extension of time fees are due on a petition for revival. In view thereof, the $1,020 extension of time fee submitted with the petition is being refunded to petitioner's deposit account as authorized.

Telephone inquiries concerning this matter may be directed to the undersigned at (571) 272-3204.

Sherry D. Brinkley
Petitions Examiner
Office of Petitions

cc: MORRISON & FOERSTER LLP
755 PAGE MILL RD
PALO ALTO, CA 94304-1018

UNITED STATES PATENT AND TRADEMARK OFFICE

Commissioner for Patents
United States Patent and Trademark Office
P.O. Box 1450
Alexandria, VA 22313-1450
www.uspto.gov

SHLESINGER ARKWRIGHT & GARVEY LLP
1420 KING STREET
SUITE 600
ALEXANDRIA VA 22314

**COPY MAILED**

AUG 2 4 2006

**OFFICE OF PETITIONS**

| | | |
|---|---|---|
| In re Application of | : | |
| Luigi Nalini | : | |
| Application No. 10/625,842 | : | ON PETITION |
| Filed: July 24, 2003 | : | |
| Attorney Docket No. 7221 | : | |

This is a decision on the petition to revive an abandoned application under 37 CFR 1.137(b), filed January 31, 2006.

The petition under 37 CFR 1.137(b) is **GRANTED**.

The above-identified application became abandoned for failure to timely file a response to the non-final Office action mailed July 13, 2005, which set a shortened statutory period for reply of three (3) months. No extensions of time under 37 CFR 1.136(a) were purchased. Accordingly, no reply having received, the application became abandoned on October 14, 2005. The mailing of this decision precedes the mailing of a Notice of Abandonment.

With the instant petition, petitioner paid the petition fee, submitted the required reply in the form of an Amendment, and made the proper statement of unintentional delay.

The matter is being forwarded to Group Art Unit 3752 for consideration of the Amendment filed January 31, 2006.

Telephone inquiries related to this decision should be directed to the undersigned at (571)272-3207.

Cliff Congo
Petitions Attorney
Office of Petitions

UNITED STATES PATENT AND TRADEMARK OFFICE

COMMISSIONER FOR PATENTS
UNITED STATES PATENT AND TRADEMARK OFFICE
P.O. BOX 1450
ALEXANDRIA, VA 22313 1450
www.uspto.gov

STOCKWELL & ASSOCIATES, PSC
861 CORPORATE DRIVE, SUITE 201
LEXINGTON KY 40503

**COPY MAILED**

OCT 2 1 2003

**OFFICE OF PETITIONS**

| | | |
|---|---|---|
| In re Application of | : | |
| Robert Michael Denton | : | |
| Application No. 10/625,858 | : | DECISION DISMISSING |
| Filed: 23 July, 2003 | : | PETITION |
| Attorney Docket No. 775-004 | : | |

This is a decision on the petition styled as a petition for correction of the filing date, which is treated as a petition filed under 37 CFR 1.10 on 18 August, 2003, requesting that the above-identified application be accorded a filing date of 22 July, 2003, rather than the presently accorded filing date of 23 July, 2003.

The petition is dismissed.

Petitioners allege that the application was deposited in Express Mail Post Office to Addressee service on 22 July, 2003. In support, petitioners have provided an affidavit of counsel's legal secretary and administrator, Robin C. Dennis, stating that she deposited the application papers with the USPS, apparently via an Express Mail Drop Box, prior to the last pickup of the day, on 22 July, 2003.

Paragraph (a) of 37 CFR 1.10 states that:

> Any correspondence received by the Patent and Trademark Office (Office) that was delivered by the "Express Mail Post Office to Addressee" service of the United States Postal Service (USPS) will be considered filed in the Office on the date of deposit with the USPS. The date of deposit with the USPS is shown by the "date-in" on the "Express Mail" mailing label or other official USPS notation. If the USPS deposit date cannot be determined, the correspondence will be accorded the Office receipt date as the filing date.[1] (emphasis added)

[1] See 37 CFR 1.6(a).

Paragraph (c) of 37 CFR 1.10 states that:

Any person filing correspondence under 37 CFR 1.10 that was received by the Office and delivered by the "Express Mail Post Office to Addressee" service of the USPS, who can show a discrepancy between the filing date accorded by the Office to the correspondence and the date of deposit as shown by the "date-in" on the "Express Mail" mailing label or other USPS notation, may petition the Commissioner to accord the correspondence a filing date as of the "date-in" on the "Express Mail" mailing label or other official USPS notation, provided that:

(1) The petition is filed promptly after the person becomes aware that the Office has accorded, or will accord, a filing date other than the USPS deposit date;

(2) The number of the "Express Mail" mailing label was placed on the papers or fees that constitute the correspondence prior to the original mailing by "Express Mail;" and

(3) The petition includes a true copy of the "Express Mail" mailing label showing the "date-in," and of any other official notation by the USPS relied upon to show the date of deposit.

Paragraph (d) of 37 CFR 1.10 states that:

Any person filing correspondence under this section that was received by the Office and delivered by the "Express Mail Post Office to Addressee" service of the USPS, who can show that the "date-in" on the "Express Mail" mailing label or other official notation entered by the USPS was incorrectly entered or omitted by the USPS, may petition the Commissioner to accord the correspondence a filing date as of the date the correspondence is shown to have been deposited with the USPS, provided that:
(1) The petition is filed promptly after the person becomes aware that the Office has accorded, or will accord, a filing date based upon an incorrect entry by the USPS;
(2) The number of the "Express Mail" mailing label was placed on the paper(s) or fee(s) that constitute the correspondence prior to the original mailing by "Express Mail"; and
(3) The petition includes a showing which establishes, to the satisfaction of the Commissioner, that the requested filing date was the date the correspondence was deposited in "Express Mail Post Office to Addressee" service prior to the last scheduled pickup for that day. Any showing pursuant to

> this paragraph must be corroborated by evidence from the USPS or that came into being after deposit and within one business day of the deposit of the correspondence in the "Express Mail Post Office to Addressee" service of the USPS. Any statement submitted in support of such a showing pursuant to this paragraph must be a verified statement if made by a person other than an employee of the USPS or a practitioner as defined in § 10.1(r) of this chapter.

At the outset, the petition lacks the showing required by 37 CFR 1.10(c)(2) and (d)(2), as a search of the official file reveals that petitioner failed to place the Express Mail label number on the originally filed specification and claims, drawings, and transmittal sheet. A review of the original application papers in the official file reveals that no Express Mail Label Number was placed thereon.

The placement of the Express Mail label number on a paper ties the paper to a single, identifiable Express Mail receipt. Where questions are later raised concerning the filing date of the paper, the USPTO may require the applicant to supply a copy of the Express Mail receipt identified on the paper in order to verify the mailing date. Where no Express Mail label number is identified on a paper, the USPTO has no way of independently associating the paper with any particular Express Mail receipt.

The difficulty caused by an applicant's failure to place an Express Mail label number on a paper is clearly illustrated by this case. Since no Express Mail label number was placed on the application papers prior to mailing, the USPTO has nothing in its control from the filing date of the papers to independently corroborate the applicants' assertion that the application was filed on 22 July, 2003.

In regards to paragraph (3) of 37 CFR 1.10(c) above, petitioners have not submitted a true copy of the "Express Mail" mailing label showing the "date-in" and any other official notation by the USPS relied upon to show the date of deposit. A copy of the "Express Mail" mailing label must be included with any renewed petition under 37 CFR 1.10(c). It is noted that no mention of any Express Mail number has been made in the application papers filed on 23 July, 2003, or the present petition.

Furthermore, assuming, *arguendo*, that petitioners had placed the Express Mail number on the application papers prior to filing them in the USPTO, the petition lacks the showing required by item 37 CFR 1.10(d)(3) above. Petitioners have not presented any

corroborating evidence that the correspondence was deposited in Express Mail service prior to the last scheduled pickup for that day. If the error was due to the USPS entering the wrong date on the Express Mail label, petitioners should request a letter from the USPS stating that the correct date of deposit is 22 July, 2003, and explaining why the error occurred. Additionally, petitioners may provide evidence that came into being after deposit and within one business day of deposit of the application in Express Mail. Such evidence may include a mail log with an entry made after the application was deposited in Express Mail, or a letter to the client sent after the mailing of the application confirming the mailing of the application.

In this regard, the affidavit of counsel's secretary, Ms. Dennis, is insufficient as proof that the application was deposited on 22 July, 2003, because the affidavit was made more than one business day after the date the application was purportedly deposited in Express Mail.

Any request for reconsideration (no further petition fee is required) must be filed within TWO MONTHS of the date of this decision in order to be considered timely [37 CFR 1.181(f)]. The request should be addressed as follows:

Further correspondence with respect to this matter should be addressed as follows:

By mail: Mail Stop Petition
Commissioner for Patents
P.O. Box 1450
Alexandria, VA 22313-1450

By FAX: (703)308-6916
Attn: Office of Petitions

By hand: Crystal Plaza Four, Suite CP4-3C23
2201 South Clark Place
Arlington, VA 22202

As no petition fee is required for a petition under 37 CFR 1.10, the petition fee of $130.00 will be credited to counsel's deposit account, No. 19-4430, as requested.

The application is being forwarded to the Office of Initial Patent Examination for further processing.

Telephone inquiries concerning this matter may be directed to the undersigned at (703)308-6918.

Douglas I. Wood
Senior Petitions Attorney
Office of Petitions

UNITED STATES PATENT AND TRADEMARK OFFICE

Commissioner for Patents
United States Patent and Trademark Office
P.O. Box 1450
Alexandria, VA 22313-1450
www.uspto.gov

mb

Mailed: 6-14-07

In re application of
Larson et al.
Serial No. 10/625,860
Filed: July 23, 2003
For: SYSTEM FOR CONTAINING AND PROCESSING SMALL OBJECTS

DECISION ON PETITION

This is a decision on the PETITION UNDER 37 CFR 1.181 TO WITHDRAW THE FINALITY OF THE OFFICE ACTION filed May 4, 2007.

On July 11, 2006, a non-final office action was mailed to applicant rejecting claims 1, 3-7,10,12, 15, and 16 under 35 USC 102(b) over the Feygin (US 6,315,957) reference. A reply to the office action was filed by applicants on January 10, 2007. In the reply, applicants amended previously presented claims 1 and 12 by narrowing the scope of the small objects and the liquid. A final office action was mailed by the office on April 17, 2007, containing a new grounds of rejection of claims 1, 3-7,10-16 and 18 over the Feygin reference under 35 USC 102(e). On May 4, 2007, the instant petition under 37 CFR 1.181 was timely filed to formally request the withdrawal of finality of the April 17, 2007 office action.

Petitioner's position for the withdrawal of the finality is that the finality is improper since the section of 35 USC 102, under which the Feygin reference was applied, was changed from (b) to (e) in the final office action, and since claims 11, 13-14, and 18 were not previously rejected under 102 and thus the applicant had not had a chance to respond to such rejections previously.

**DECISION**

Section 706.07 of the MPEP states:

706.07(a) Final Rejection, When Proper on Second Action

Under present practice, second or any subsequent actions on the merits shall be final, except where the examiner introduces a new ground of rejection that is neither necessitated by applicant's amendment of the claims nor based on information submitted in an information disclosure statement filed during the period set forth in 37 CFR 1.97(c) with the fee set forth in 37 CFR 1.17(p).

In the non-final rejection of July 11, 2006, claims 1, 3-7, 10, 12, 15, and 16 were rejected under 35 USC 102(b) over the Feygin (US 6,315,957) reference. A reply to the office action was filed

by applicants on January 10, 2007. In the reply, applicants amended previously presented claims 1 and 12 by narrowing the scope of the small objects and the liquid. The applicant further argued that the Feygin reference did not qualify as prior art under 35 USC 102(b). A final office action was mailed by the office on April 17, 2007, containing a new grounds of rejection of claims 1, 3-7, 10-16 and 18 over the Feygin reference under 35 USC 102(e). Petitioner's argument for the withdrawal of the finality has merit. It is clear that the Feygin reference was improperly applied under 35 USC 102(b), in the non-final office action of July 11, 2006, and then was switched to a rejection under 35 USC 102(e) in the final office action. This change was not necessitated by amendments. Furthermore, it is clear that the new grounds of rejection of claims 11, 13-14, and 18 under 35 USC 102(e), over the Feygin reference, in the final office action, was not necessitated by amendments, since the amendments merely narrowed the scope of the small objects and liquid in the independent claims 1 and 12. Claims 11, 13-14, and 18 could have been properly rejected over the Feygin reference in the non-final office action of July 11, 2006, but were not.

Because the rejection of claims 1, 3-7, 10-16 and 18 over the Feygin reference under 35 USC 102(e), was not necessitated by amendment, the finality of the office action was premature. Accordingly, the petition for withdrawal of finality is **GRANTED.**

It is also pointed out that while the finality of the office action has been withdrawn, the rejection still stands. Applicant's time for response continues to run from April 17, 2007. Extensions of time may be obtained to file any amendments.

JMStone

Jacqueline M. Stone, Director
Technology Center 1700
Chemical and Materials Engineering

SONIA K. GUTERMAN
ADAM M. SCHOEN
LAWSON & WEITZEN, LLP
SUITE 345
88 BLACK FALCON AVENUE
BOSTON, MA 02210-2414

UNITED STATES PATENT AND TRADEMARK OFFICE

UNITED STATES DEPARTMENT OF COMMERCE
United States Patent and Trademark Office
Address: COMMISSIONER FOR PATENTS
P.O. Box 1450
Alexandria, Virginia 22313-1450
www.uspto.gov

Qwest Communications International Inc.
1801 California St., #900
Denver, CO 80202

Mail Date: 04/21/2010

| | | |
|---|---|---|
| **Applicant** | : Bruce A. Phillips | : DECISION ON REQUEST FOR |
| **Patent Number** | : 7656860 | : RECALCULATION of PATENT |
| **Issue Date** | : 02/02/2010 | : TERM ADJUSTMENT IN VIEW |
| **Appliction No** | : 10/625,863 | : OF WYETH AND NOTICE OF INTENT TO |
| **Filed** | : 07/22/2003 | : ISSUE CERTIFICATE OF CORRECTION |
| | | : |

The Request for Recalculation is **GRANTED** to the extent indicated.

The patent term adjustment has been determined to be **1243** days. The USPTO will *sua sponte* issue a certificate of correction reflecting the amount of PTA days determined by the recalculation.

Prior to the issuance of the certificate of correction, the USPTO will afford patentee an opportunity to be heard and request reconsideration. Accordingly, patentee has **one month or thirty (30) days**, whichever is longer, to file a request for reconsideration of this patent term adjustment calculation. See 35 U.S.C. 154(b)(3)(B)(ii) and 37 CFR 1.322(a)(4). No extensions of time will be granted under 37 CFR 1.136.

Patentee should use document code PET.OP if electronically filing a request for reconsideration of this patent term adjustment calculation. The patentee must also include the information required by 37 CFR 1.705(b)(2) and the fee required by 37 CFR 1.18(e). If patentee does not file a timely request for reconsideration of this patent term adjustment calculation including the information required by 37 CFR 1.705(b)(2) and the fee required by 37 CFR 1.18(e), the USPTO will issue a certificate of correction reflecting the PTA determination noted above.

Patentee should be aware that in order to preserve the right to review in the United States District Court for the District of Columbia of the USPTO patent term adjustment determination, patentee must ensure that he or she also take the steps required under 35 U.S.C. 154(b)(4)(A) in a timely manner. Nothing in the request for recalculation should be construed as providing an alternative time frame for commencing a civil action under 35 U.S.C. 154(b)(4)(A).

Any questions concerning this decision should be directed to the Office of Patent Legal Administration at 571-272-7702.

UNITED STATES PATENT AND TRADEMARK OFFICE

Commissioner for Patents
United States Patent and Trademark Office
P.O. Box 1450
Alexandria, VA 22313-1450
www.uspto.gov

**MORGAN, LEWIS & BOCKIUS, LLP**
**ONE MARKET SPEAR STREET TOWER**
**SAN FRANCISCO, CA 94105**

**COPY MAILED**

AUG 06 2009

**OFFICE OF PETITIONS**

| | | |
|---|---|---|
| In re Application of | : | |
| **Dennis M. BROWN** | : | |
| Application No. 10/625,866 | : | DECISION GRANTING PETITION |
| Filed: July 22, 2003 | : | UNDER 37 CFR 1.313(c)(2) |
| Attorney Docket No. **067716-5012-US** | : | |

This is a decision on the petition under 37 CFR 1.313(c)(2), filed August 5, 2009, to withdraw the above-identified application from issue after payment of the issue fee.

The petition is **GRANTED**.

The above-identified application is withdrawn from issue for consideration of a submission under 37 CFR 1.114 (request for continued examination). *See* 37 CFR 1.313(c)(2).

***Petitioner is advised that the issue fee paid on July 7, 2009 cannot be refunded. If, however, this application is again allowed, petitioner may request that it be applied towards the issue fee required by the new Notice of Allowance.***[1]

Telephone inquiries should be directed to the undersigned at (571) 272-7253.

This application is being referred to Technology Center AU 1614 for processing of the request for continued examination under 37 CFR 1.114 and for consideration of the concurrently filed amendment and information disclosure statement.

/Monica A. Graves/
Petitions Examiner, Office of Petitions

---

[1] *The request to apply the issue fee to the new Notice may be satisfied by completing and returning the new Part B – Fee(s) Transmittal Form (along with any balance due at the time of submission). Petitioner is advised that the Issue Fee Transmittal Form* ***must*** *be completed and timely submitted to avoid abandonment of the application.*

SPE RESPONSE FOR CERTIFICATE OF CORRECTION

Paper No.: ____

DATE 3/23/09

TO SPE OF : ART UNIT 1793

SUBJECT : Request for Certificate of Correction for Appl. No.: 10/625886 Patent No.: 7422793 B2

Please respond to this request for a certificate of correction within 7 days.

**FOR IFW FILES:**

Please review the requested changes/corrections as shown in the **COCIN** document(s) in the IFW application image. No new matter should be introduced, nor should the scope or meaning of the claims be changed.

Please complete the response (see below) and forward the completed response to scanning using document code **COCX**.

**FOR PAPER FILES:**

Please review the requested changes/corrections as shown in the attached certificate of correction. Please complete this form (see below) and forward it with the file to:

**Certificates of Correction Branch (CofC)**
**South Tower - 9A22**
**Palm Location 7580**

Virginia Tolbert
**Certificates of Correction Branch**
**703-308-9390 ext. 113**

**Thank You For Your Assistance**

**The request for issuing the above-identified correction(s) is hereby:**
Note your decision on the appropriate box.

- ☒ **Approved** — All changes apply.
- ☐ **Approved in Part** — Specify below which changes **do not** apply.
- ☐ **Denied** — State the reasons for denial below.

**Comments:** _____

Roy Van King
**SPE**

1793
**Art Unit**

PTOL-306 (REV. 7/03)

U.S. DEPARTMENT OF COMMERCE Patent and Trademark Office

UNITED STATES PATENT AND TRADEMARK OFFICE

Commissioner for Patents
United States Patent and Trademark Office
P.O. Box 1450
Alexandria, VA 22313-1450
www.uspto.gov

VOLENTINE FRANCOS, & WHITT PLLC
ONE FREEDOM SQUARE
11951 FREEDOM DRIVE SUITE 1260
RESTON VA 20190

**COPY MAILED**

NOV 04 2004

**OFFICE OF PETITIONS**

In re Application of
Hideyuki Otake
Application No. 10/625,902
Filed: July 24, 2003
Attorney Docket No. OKI.556

: DECISION REFUSING STATUS
: UNDER 37 CFR 1.47(b)

This is in response to the petition filed October 6, 2004, under 37 CFR 1.47(b).

The petition is **DISMISSED**.

Rule 47 applicant is given TWO MONTHS from the mailing date of this decision to reply, correcting the below-noted deficiencies. Any reply should be entitled "Request for Reconsideration of Petition Under 37 CFR 1.47(b)," and should only address the deficiencies noted below, except that the reply may include an oath or declaration executed by the non-signing inventor. **FAILURE TO RESPOND WILL RESULT IN ABANDONMENT OF THE APPLICATION**. Extensions of time may be obtained in accordance with 37 CFR 1.136(a).

The above-identified application was filed on July 24, 2003 without an executed oath or declaration. Accordingly, on April 21, 2004, a "Notice To File Missing Parts of Nonprovisional Application" was mailed, requiring an executed oath or declaration and a surcharge for the late filing of the oath or declaration.

In response, on October 6, 2004, the present petition was filed, accompanied by the late filing surcharge and a four (4) month extension of time.

A grantable petition under 37 CFR 1.47(b) requires:

(1) proof that the non-signing inventor cannot be reached or refuses to sign the oath or declaration after having been presented with the application papers (specification, claims and drawings);

(2) an acceptable oath or declaration in compliance with 35 U.S.C. §§ 115 and 116;

(3) the petition fee;

(4) a statement of the last known address of the non-signing inventor;
(5) proof of proprietary interest, and
(6) proof of irreparable damage.

The petition lacks items (2) and (6)

As to item (2), an oath or declaration for the patent application in compliance with 37 CFR 1.63 and 1.64 has not been presented. A declaration in compliance with 37 CFR 1.63, 1.64, and 1.67 must be presented, signed by all of the signing inventors, if any. If no inventor(s) will sign the declaration, the declaration may be signed on behalf of the inventor by an assignee. The oath or declaration must be signed by an officer of the corporation (president, vice president, secretary, or treasurer) on behalf of and as agent for the non-signing inventor(s). The officer must identify his/her title in the declaration, as well as his/her mailing address, residence, if the applicant lives at a different location from where he or she customarily receives mail, as well as the citizenship of individual signing on behalf of the non-signing inventor. If the oath or declaration is not signed by an officer of the corporation, then proof of authority of the person signing on behalf of the corporation must be submitted.[1]

As to item (6), petitioner must provide proof of irreparable damages in accordance with MPEP 409.03(g).

Further correspondence with respect to this matter should be addressed as follows:

By mail: Mail Stop Petition
Commissioner for Patents
P.O. Box 1450
Alexandria, VA 22313-1450

By FAX: (703) 872-9306

Telephone inquiries concerning this matter may be directed to the undersigned Petitions Attorney at (571) 272-3212.

Patricia Faison-Ball

Patricia Faison-Ball
Senior Petitions Attorney
Office of Petitions

---

[1] MPEP 409.03(b).

UNITED STATES PATENT AND TRADEMARK OFFICE

Commissioner for Patents
United States Patent and Trademark Office
P.O. Box 1450
Alexandria, VA 22313-1450
www.uspto.gov

VOLENTINE FRANCOS, & WHITT PLLC
ONE FREEDOM SQUARE
11951 FREEDOM DRIVE SUITE 1260
RESTON VA 20190

COPY MAILED

JAN 28 2005

OFFICE OF PETITIONS

In re Application of :
Hideyuki Otake :
Application No. 10/625,902 : DECISION ACCORDING STATUS
Filed: July 24, 2003 : UNDER 37 CFR 1.47(b)
Attorney Docket No: OKI.556 :

This is in response to the renewed petition filed under 37 CFR 1.47(b) on December 20, 2004.

The petition is **GRANTED**.

The above-identified application was filed on July 24, 2003 without an executed oath or declaration. Accordingly, on May 21, 2004, a "Notice To File Missing Parts of Nonprovisional Application" was mailed, requiring an executed oath or declaration and a surcharge for the late filing of the oath or declaration. In response, on October 6, 2004, a petition was filed, accompanied by the late filing surcharge and a four (4) month extension of time. On November 4, 2004, the petition was dismissed because an oath or declaration for the patent application in compliance with 37 CFR 1.63 and 1.64 had not been presented.

A grantable petition under 37 CFR 1.47(b) requires:

(1) proof that the non-signing inventor cannot be reached or refuses to sign the oath or declaration after having been presented with the application papers (specification, claims and drawings);

(2) an acceptable oath or declaration in compliance with 35 U.S.C. §§ 115 and 116;

(3) the petition fee;

(4) a statement of the last known address of the non-signing inventor;

(5) proof of proprietary interest, and

(6) proof of irreparable damage.

In response to the decision dismissing the petition filed October 6, 2004, an oath or declaration executed by the Manager of the Legal and Intellectual Property Division of Oki Electric Industry Co., Ltd.,assignee, on behalf of the non-signing inventor. The

petition also indicates the Manager's authority to act and sign for the assignee.

All requirements under 37 CFR 1.47(b) therefore having been met, as provided in Rule 1.47( c), this Office will forward notice of this application's filing to the non-signing inventor at the address given in the petition. Notice of the filing of this application will also be published in the Official Gazette.

This application is being forwarded to the Office of Initial Patent Examination for further pre-examination processing.

Telephone inquiries related to this decision should be directed to the undersigned Petitions Attorney at (571) 272-3212.

Patricia Faison-Ball

Patricia Faison-Ball
Senior Petitions Attorney
Office of Petitions

UNITED STATES PATENT AND TRADEMARK OFFICE

Commissioner for Patents
United States Patent and Trademark Office
P.O. Box 1450
Alexandria, VA 22313-1450
www.uspto.gov

**COPY MAILED**

JAN 28 2005

**OFFICE OF PETITIONS**

HIDEYUKI OTAKE
28-7 OHNO, MOMOYAMA-CHO
FUSHIMI, KYOTO, JAPAN

In re Application of
Hideyiuko Otake
Application No. 10/625,902
Filed: July 24, 2003
For: DIGITAL-TO-ANALOG CONVERTING CIRCUIT

Dear Mr. OTAKE:

You are named as the inventor in the above identified United States patent application, filed under the provisions of 35 U.S.C. 116 (United States Code), and 37 CFR 1.47(a), Rules of Practice in Patent Cases. Should a patent be granted on the application you will be designated therein as the inventor.

As the named inventor you are entitled to inspect any paper in the file wrapper of the application, order copies of all or any part thereof (at a prepaid cost per 37 CFR 1.19) or make your position of record in the application. Alternatively, you may arrange to do any of the preceding through a registered patent attorney or agent presenting written authorization from you. If you care to join the application, counsel of record (see below) would presumably assist you. Joining in the application would entail the filing of an appropriate oath or declaration by you pursuant to 37 CFR 1.63.

Telephone inquiries regarding this communication should be directed to the undersigned Petitions Attorney at (571) 272-3212. Requests for information regarding your application should be directed to the File Information Unit at 703/308-2733. Information regarding how to pay for and order a copy of the application, or a specific paper in the application, should be directed to Certification Division at 703/308-9726 or 1-800-972-6382 (outside the Washington D.C. area).

Patricia Faison Ball

Patricia Faison-Ball
Senior Petitions Attorney
Office of Petitions

cc:
VOLENTINE FRANCOS, & WHITT PLLC
ONE FREEDOM SQUARE
11951 FREEDOM DRIVE SUITE 1260
RESTON VA 20190

UNITED STATES PATENT AND TRADEMARK OFFICE

UNITED STATES DEPARTMENT OF COMMERCE
United States Patent and Trademark Office
Address: COMMISSIONER FOR PATENTS
P.O. Box 1450
Alexandria, Virginia 22313-1450
www.uspto.gov

MINTZ, LEVIN, COHN, FERRIS, GLOVSKY AND POPEO, P.C
ONE FINANCIAL CENTER
BOSTON, MA 02111

Mail Date: 04/21/2010

| | | |
|---|---|---|
| **Applicant** | : Marco Stura | : DECISION ON REQUEST FOR |
| **Patent Number** | : 7610037 | : RECALCULATION of PATENT |
| **Issue Date** | : 10/27/2009 | : TERM ADJUSTMENT IN VIEW |
| **Appliction No** | : 10/625,909 | : OF WYETH AND NOTICE OF INTENT TO |
| **Filed** | : 07/24/2003 | : ISSUE CERTIFICATE OF CORRECTION |
| | | : |

The Request for Recalculation is **GRANTED** to the extent indicated.

The patent term adjustment has been determined to be **214** days. The USPTO will *sua sponte* issue a certificate of correction reflecting the amount of PTA days determined by the recalculation.

Prior to the issuance of the certificate of correction, the USPTO will afford patentee an opportunity to be heard and request reconsideration. Accordingly, patentee has **one month or thirty (30) days**, whichever is longer, to file a request for reconsideration of this patent term adjustment calculation. See 35 U.S.C. 154(b)(3)(B)(ii) and 37 CFR 1.322(a)(4). No extensions of time will be granted under 37 CFR 1.136.

Patentee should use document code PET.OP if electronically filing a request for reconsideration of this patent term adjustment calculation. The patentee must also include the information required by 37 CFR 1.705(b)(2) and the fee required by 37 CFR 1.18(e). If patentee does not file a timely request for reconsideration of this patent term adjustment calculation including the information required by 37 CFR 1.705(b)(2) and the fee required by 37 CFR 1.18(e), the USPTO will issue a certificate of correction reflecting the PTA determination noted above.

Patentee should be aware that in order to preserve the right to review in the United States District Court for the District of Columbia of the USPTO patent term adjustment determination, patentee must ensure that he or she also take the steps required under 35 U.S.C. 154(b)(4)(A) in a timely manner. Nothing in the request for recalculation should be construed as providing an alternative time frame for commencing a civil action under 35 U.S.C. 154(b)(4)(A).

Any questions concerning this decision should be directed to the Office of Patent Legal Administration at 571-272-7702.

UNITED STATES PATENT AND TRADEMARK OFFICE

UNITED STATES DEPARTMENT OF COMMERCE
United States Patent and Trademark Office
Address: COMMISSIONER FOR PATENTS
P.O. Box 1450
Alexandria, Virginia 22313-1450
www.uspto.gov

MINTZ, LEVIN, COHN, FERRIS, GLOVSKY AND POPEO, P.C
ONE FINANCIAL CENTER
BOSTON, MA 02111

Mail Date: 05/18/2010

**Applicant** : Marco Stura
**Patent Number** : 7610037
**Issue Date** : 10/27/2009
**Application No** : 10/625,909
**Filed** : 07/24/2003

: NOTICE CONCERNING IMPROPER
: CALCULATION OF PATENT TERM
: ADJUSTMENT BASED UPON USPTO
: IMPROPERLY MEASURING REDUCTION
: PERIOD UNDER 37 CFR 1.704(c)(10).

The United States Patent and Trademark Office (USPTO) discovered that in processing the recent recalculation decisions mailed in response to patentee's filed Request for Recalculation of Patent Term Adjustment in view of Wyeth, the USPTO improperly measured the reduction period for reductions under 37 CFR 1.704(c)(10). Pursuant to 37 CFR 1.704(c)(10), patentee's reduction begins on the date of filing the amendment under 37 CFR 1.312 ("1.312 amendment") or other related paper and ends on the date that the Office mails a response to the filing of the 1.312 amendment or other paper. It has been discovered that during the recalculation, the calculation failed to the limit the reduction to the mail date of the response to the 1.312 amendment or other paper. Accordingly, patentee's reductions were greater than warranted.

This notice **VACATES** the previous GRANTED request for recalculation and provides patentee with a revised GRANTED recalculation.

The patent term adjustment has been determined to be **254** days. The USPTO will *sua sponte* issue a certificate of correction reflecting the amount of patent term adjustment (PTA) days determined by the recalculation.

Prior to the issuance of the certificate of correction, the USPTO will afford patentee an opportunity to be heard and request reconsideration. Accordingly, patentee has **one month or thirty (30) days** from the mail date of this notice, whichever is longer, to file a request for reconsideration of this PTA calculation. See 35 U.S.C. § 154(b)(3)(B)(ii) and 37 CFR 1.322(a)(4).

Patentee should use document code PET.OP if electronically filing a request for reconsideration of this PTA calculation. The patentee must also include the information required by 37 CFR 1.705(b)(2), and the fee required by 37 CFR 1.18(e). If patentee does not file a timely request for reconsideration of this PTA calculation, including the information required by 37 CFR 1.705(b)(2) and the fee required by 37 CFR 1.18(e), the USPTO will issue a certificate of correction reflecting the PTA determination noted above.

Patentee should be aware that in order to preserve the right of review of the USPTO's PTA determination in the United States District Court for the District of Columbia, patentee must ensure that the steps required under 35 U.S.C. § 154 (b)(4) are taken in a timely manner. Nothing in the request for recalculation should be construed as providing an alternative time frame for commencing a civil action under 35 U.S.C. § 154(b)(4).

SPE ~~EPPS~~ PORTA

## SPE RESPONSE FOR CERTIFICATE OF CORRECTION

Paper No.: _____

DATE : 3/24/06

TO SPE OF : ART UNIT ~~2878~~ 2884

SUBJECT : Request for Certificate of Correction for Appl. No.: 10/625,920 Patent No.: 7005646

Please respond to this request for a certificate of correction within 7 days.

Please review the requested changes/corrections as shown in the **COCIN** document(s) in the IFW application image. No new matter should be introduced, nor should the scope or meaning of the claims be changed.

Please complete the response (see below) and forward the completed response to scanning using document code **COCX**.


**Lamonte M. Newsome**
**Certificates of Correction Branch**
**703-308-9390 ext. 112**


**Thank You For Your Assistance**

**The request for issuing the above-identified correction(s) is hereby:**

Note your decision on the appropriate box.

- ☐ **Approved** — **All** changes apply.
- ☐ **Approved in Part** — Specify below which changes **do not** apply.
- ☒ **Denied** — State the reasons for denial below.

**Comments:**

REQUESTED CORRECTION NOT APPROVED BECAUSE REFERENCES WERE NOT CONSIDERED.

SPE — 2884 Art Unit

UNITED STATES PATENT AND TRADEMARK OFFICE

Commissioner for Patents
United States Patent and Trademark Office
P.O. Box 1450
Alexandria, VA 22313-1450
www.uspto.gov

Date Mailed : 04/20/06

Patent No. : 7005646 B1
Patent Issued : 02/28/06
Docket No. : **150-122**

Re: Request for Certificate of Correction

Consideration has been given your request for the issuance of a certificate of correction for the above-identified patent under the provisions of Rule(s) 1.322.

On the cover page, item (56), requested correction not approved because references were not considered. **"Therefore, no correction(s) is in order here under United States Codes (U.S.C.) 254 and the Code of Federal Regulation (C.F.R.) 1322."**

In view of the foregoing, your request in this matter is hereby denied.

Lamonte M. Newsome
For Cecelia Newman, Supervisor
Decisions & Certificates
Of Correction Branch
(703) 305-8309 or (703) 308-9390 #112

**JOHN H CROZIER**
**1934 HUNTINGTON TURNPIKE**
**TRUMBULL CT 06611**

LMN

UNITED STATES PATENT AND TRADEMARK OFFICE

COMMISSIONER FOR PATENTS
UNITED STATES PATENT AND TRADEMARK OFFICE
P.O. BOX 1450
ALEXANDRIA, VA 22313-1450
www.uspto.gov

**MAILED**
**FROM DIRECTORS OFFICE**

DEC 0 2 2004

**TECHNOLOGY CENTER 3600**

Stephen C. Glazier
Kirkpatrick & Lockhart LLP
1800 Massachusetts Avenue, NW
Washington, DC 20036

| | | |
|---|---|---|
| In re application of<br>Matthew Banet, et al.<br>Application No. 10/625,942<br>Filed: July 24, 2003<br>For: WIRELESS VEHICLE-MONITORING SYSTEM OPERATING ON BOTH TERRESTRIAL AND SATELLITE NETWORKS | :<br>:<br>:<br>: | **DECISION ON PETITION TO MAKE SPECIAL (ACCELERATED EXAMINATION)** |

This is in response to the petition filed on July 8, 2004, to make the above-identified application special on the basis of special examining procedure for certain new applications - accelerated examination as set forth in MPEP § 708.02, VIII.

The requirements for granting special status under this section are: (A) a petition to make special accompanied by the fee set forth in 37 CFR 1.17(h); (B) all claims being directed to a single invention, or an election without traverse if the Office determines that all the claims are not directed to a single invention; (C) a statement that a pre-examination search was made listing the field of search; (D) one copy of each of the references deemed most closely related to the subject matter encompassed by the claims if said references are not already of record; and (E) a detailed discussion of how the claimed subject matter is patentable over the references in accordance with 37 CFR 1.111 (b) and (c).

Since all of the requirements for special status under MPEP § 708.02, VIII have been met, the petition is **GRANTED**.

In satisfaction of item (B) above, the petitioner states, "If it is determined that the pending claims are not directed to a single invention, Applicants will make an election without traverse as required under MPEP § 708.02(VIII)(B)."

The examiner is directed (1) to make an interference search for possible interfering applications, (2) to promptly examine this application out of turn, and (3) if any interfering application is discovered, to examine such application simultaneously and state in the first official letter of such application that it is being taken out of turn because of a possible interference.

Petitioner is advised that this application will continue to be special, throughout its entire prosecution and pendency, including interference or appeal, if any, only if petitioner makes a prompt ***bona fide*** effort, in response to each Office action, to place the application in condition for allowance, even if it is necessary to conduct an interview with the examiner to accomplish this purpose.

**SUMMARY**: Petition to Make Special **GRANTED**.

Randolph A. Reese
Special Programs Examiner
Technology Center 3600
(703) 308-2121

RAR/rwg: 11/10/04

UNITED STATES PATENT AND TRADEMARK OFFICE

Commissioner for Patents
United States Patent and Trademark Office
P.O. Box 1450
Alexandria, VA 22313-1450
www.uspto.gov

**BRACEWELL & PATTERSON**
**P.O. BOX 61389**
**HOUSTON, TX 77208-1389**

COPY MAILED

FEB 11 2005

OFFICE OF PETITIONS

| | |
|---|---|
| In re Application of | : |
| Bjarne Nilsen | : |
| Application No. 10/625,995 | : DECISION REFUSING STATUS |
| Filed: July 24, 2003 | : UNDER 37 CFR 1.47(b) |
| For: METHOD OF CLEANING SURFACES IN | : |
| CONTACT WITH A FLUID FLOW | : |

This is in response to the petition under 37 CFR 1.47, filed June 25, 2004, which is being treated under 37 CFR 1.47(b).

The petition is dismissed

Any request for reconsideration must be submitted within TWO MONTHS from the mailing date of this decision to respond, correcting the below-noted deficiencies. Extension of time under 37 CFR 1.136(a) are permitted. Any reply should be entitled "Renewed Petitions under 37 CFR 1.137(b) and 37 CFR 1.47(b)" and should only address the deficiencies noted below, except that the reply may include an oath or declaration executed by the inventor. This is **not** a final agency action within the meaning of 5 U.S.C. § 705.

A review of the file indicates that the Office received the required surcharge ($130). However, there is no indication that petitioner has submitted an oath or declaration in reply to the Notice to Filing Missing Parts of Nonprovisional Application (Notice) mailed April 20, 2004. Therefore, this application became abandoned for failure to timely submit a reply to the Notice on or before June 20, 2004.

Petitioner may wish to consider filing a petition to revive under either 37 CFR 1.137(a) or 137(b). The filing of a petition under the unavoidable or unintentional standard cannot be intentionally delayed and therefore should be filed promptly. A person seeking revival due to unavoidable or unintentional delay cannot make a statement that the delay was unavoidable or unintentional unless the entire delay, including the delay from the date it was discovered that the application was abandoned until the filing of the petition to revive under 37 CFR 1.137(a) or (b) was unavoidable or unintentional. A statement that the delay was unavoidable or unintentional is not appropriate if petitioner intentionally delayed the filing of a petition for revival under 37 CFR 1.137(a) or (b).

A grantable petition under 37 CFR 1.47(b) requires: (1) proof that the non-signing inventor

cannot be reached or refuses to sign the oath or declaration; (2) an acceptable oath or declaration; (3) the petition fee; (4) a statement of the last known address of the non-signing inventor; (5) proof of proprietary interest; and (6) proof of irreparable damage. Applicant lacks item (2) and (6) set forth above.

As to item (2), petitioner has not provided an oath or declaration in response to the Notice mailed April 20, 2004. An oath or declaration in compliance with 37 CFR 1.63 and 1.64 signed by the Rule 1.47 applicant on behalf of Bjarne Nilsen is REQUIRED. See MPEP 409.03(b).

As to item (6), Rule 47 applicant failed to provide proof of irreparable damage (see MPEP 409.03(g)). A statement by Rule 47 applicant that the filing is necessary to preserve the rights of the parties would be sufficient.

Further correspondence with respect to this matter should be addressed as follows:

By mail: Mail Stop PETITIONS
Commissioner for Patents
Post Office Box 1450
Alexandria, VA 22313-1450

By hand: Customer Service Window
Randolph Building
401 Dulany Street
Alexandria, VA 22314

By fax: (703) 872-9306
ATTN: Office of Petitions

Any questions concerning this matter may be directed to Wan Laymon at (571) 272-3220.

Frances Hicks

Frances Hicks
Lead Petitions Examiner
Office of Petitions
Office of the Deputy Commissioner
for Patent Examination Policy

UNITED STATES PATENT AND TRADEMARK OFFICE

Commissioner for Patents
United States Patent and Trademark Office
P.O. Box 1450
Alexandria, VA 22313-1450
www.uspto.gov

**BRACEWELL & PATTERSON**
**P.O. BOX 61389**
**HOUSTON, TX 77208-1389**

COPY MAILED

JUN 1 0 2005

OFFICE OF PETITIONS

In re Application of
Bjarne Nilsen
Application No. 10/625,995
Filed: July 24, 2003
For: METHOD OF CLEANING SURFACES IN CONTACT WITH A FLUID FLOW

: DECISION REFUSING STATUS
: UNDER 37 CFR 1.47(b)

This is in response to the renewed petition under 37 CFR 1.47(b), filed April 25, 2005, requesting reconsideration of the decision mailed February 11, 2005.[1]

The petition is dismissed

Any request for reconsideration must be submitted within TWO MONTHS from the mailing date of this decision to respond, correcting the below-noted deficiencies. Extension of time under 37 CFR 1.136(a) are permitted. Any reply should be entitled "Renewed Petitions under 37 CFR 1.137(b) and 37 CFR 1.47(b)" and should only address the deficiencies noted below, except that the reply may include an oath or declaration executed by the inventor. This is **not** a final agency action within the meaning of 5 U.S.C. § 705.

A grantable petition under 37 CFR 1.47(b) requires: (1) proof that the non-signing inventor cannot be reached or refuses to sign the oath or declaration; (2) an acceptable oath or declaration; (3) the petition fee; (4) a statement of the last known address of the non-signing inventor; (5) proof of proprietary interest; and (6) proof of irreparable damage. Applicant lacks item (2) set forth above.

Rule 47(b) applicant still has not satisfied item (2), the declaration submitted with the petition lacks compliance with 37 CFR 1.63 and 1.64. The signature block for Bjarne Nilsen is missing. Accordingly, an oath or declaration in compliance with 37 CFR 1.63 and 1.64 signed by the Rule 1.47 applicant on behalf of Nilsen is required. See MPEP 409.03(a).

Further correspondence with respect to this matter should be addressed as follows:

---

[1] The decision mailed February 11, 2005 stated that this application is abandoned for failure to file a timely and complete reply ( oath or declaration) to the Notice of April 20, 2004. However, this statement is incorrect and is hereby withdrawn.

By mail: Mail Stop PETITIONS
Commissioner for Patents
Post Office Box 1450
Alexandria, VA 22313-1450

By hand: Customer Service Window
Randolph Building
401 Dulany Street
Alexandria, VA 22314

By fax: (703) 872-9306
ATTN: Office of Petitions

Any questions concerning this matter may be directed to Wan Laymon at (571) 272-3220.

Frances Hicks

Frances Hicks
Lead Petitions Examiner
Office of Petitions
Office of the Deputy Commissioner
for Patent Examination Policy

UNITED STATES PATENT AND TRADEMARK OFFICE

Commissioner for Patents
United States Patent and Trademark Office
P.O. Box 1450
Alexandria, VA 22313-1450
www.uspto.gov

**BRACEWELL & PATTERSON**
**P.O. BOX 61389**
**HOUSTON, TX 77208-1389**

**COPY MAILED**

SEP 16 2005

**OFFICE OF PETITIONS**

| | |
|---|---|
| In re Application of<br>Bjarne Nilsen<br>Application No. 10/625,995<br>Filed: July 24, 2003<br>For: METHOD OF CLEANING SURFACES IN CONTACT WITH A FLUID FLOW | DECISION ACCORDING STATUS UNDER 37 CFR 1.47(b) |

This is a decision on the petition filed August 5, 2005, requesting reconsideration of a decision mailed June 10, 2005, which refused to accord 37 CFR 1.47(b) status to the above-identified application.

The petition is granted.

The above-identified application and papers have been reviewed and found in compliance with 37 CFR 1.47(b). This application is hereby accorded Rule 1.47(b) status.

Petitioner has demonstrated that the non-signing inventor refuses to sign the application. Specifically, petitioner established that the nonsigning inventor, Bjarne Nilsen, refuses to sign the declaration after being sent a copy of the above-identified application and declaration.

As provided in Rule 1.47(c), this Office will forward notice of this application's filing to the non-signing inventor at the address given in the petition. Notice of the filing of this application will also be published in the Official Gazette.

Telephone inquiries regarding this communication should be directed to Wan Laymon at (571) 272-3220.

This matter is being referred to Technology Center AU 1746 for examination in due course.

Frances Hicks
Lead Petitions Examiner
Office of Petitions
Office of the Deputy Commissioner
for Patent Examination Policy

UNITED STATES PATENT AND TRADEMARK OFFICE

Commissioner for Patents
United States Patent and Trademark Office
P.O. Box 1450
Alexandria, VA 22313-1450
www.uspto.gov

**BJARNE NILSEN**
**SKATVEDTVEIEN 64**
**3475 SAETRE**
**NORWAY**

**AIRMAIL**

**COPY MAILED**

SEP 1 6 2005

**OFFICE OF PETITIONS**

In re Application of
Bjarne Nilsen
Application No. 10/625,995
Filed: July 24, 2003
For: METHOD OF CLEANING SURFACES IN CONTACT WITH A FLUID FLOW

Dear Mr. Nilsen:

You are named as the sole inventor in the above identified United States patent application, filed under the provisions of 35 U.S.C. 118 (United States Code), and 37 CFR 1.47(b), Rules of Practice in Patent Cases. Should a patent be granted on the application you will be designated therein as the sole inventor.

As a named inventor you are entitled to inspect any paper in the file wrapper of the application, order copies of all or any part thereof (at a prepaid cost per 37 CFR 1.19) or make your position of record in the application. Alternatively, you may arrange to do any of the preceding through a registered patent attorney or agent presenting written authorization from you. If you care to join the application, counsel of record (see below) would presumably assist you. Joining in the application would entail the filing of an appropriate oath or declaration by you pursuant to 37 CFR 1.63.

Telephone inquiries regarding this communication should be directed to Wan Laymon at (571)272-3220. Requests for information regarding your application should be directed to the File Information Unit at (703)308-2733. Information regarding how to pay for and order a copy of the application, or a specific paper in the application, should be directed to Certification Division at (703)308-9726 or 1(800)972-6382 (outside the Washington D.C. area).

Frances Hicks

Frances Hicks
Lead Petitions Examiner
Office of Petitions
Office of the Deputy Commissioner
for Patent Examination Policy

cc:
BRACEWELL & PATTERSON
P.O. BOX 61389
HOUSTON, TX 77208-1389

UNITED STATES PATENT AND TRADEMARK OFFICE

Commissioner for Patents
United States Patent and Trademark Office
P.O. Box 1450
Alexandria, VA 22313-1450
www.uspto.gov

**COOK, ALEX, MCFARRON, MANZO,**
**CUMMINGS & MEHLER, LTD.**
**SUITE 2850**
**200 WEST ADAMS STREET**
**CHICAGO, IL 60606**

COPY MAILED
SEP 14 2006
OFFICE OF PETITIONS

| | | |
|---|---|---|
| In re Application of | : | |
| Tetsuo Tsutsui | : | |
| Application No. 10/626,024 | : | ON PETITION |
| Filed: July 24, 2003 | : | |
| Attorney Docket No. 0553-0373 | : | |

This is a decision on the petition, filed September 14, 2006, under 37 CFR 1.313(c)(2) to withdraw the above-identified application from issue after payment of the issue fee.

The petition is **GRANTED**.

The above-identified application is withdrawn from issue for consideration of a submission under 37 CFR 1.114 (request for continued examination). See 37 CFR 1.313(c)(2).

**Petitioner is advised that the issue fee paid on August 24, 2006, in the above-identified application cannot be refunded. If, however, the above-identified application is again allowed, petitioner may request that it be applied towards the issue fee required by the new Notice of Allowance.**[1]

Telephone inquiries should be directed to the undersigned at (571) 272-3208.

The examiner of Technology Center AU 2879 will consider the request for continued examination under 37 CFR 1.114.

Karen Creasy
Petitions Examiner
Office of Petitions

---

[1] The request to apply the issue fee to the new Notice may be satisfied by completing and returning the new Issue Fee Transmittal Form PTOL-85(b), which includes the following language thereon: "Commissioner for Patents is requested to apply the Issue Fee and Publication Fee (if any) or re-apply any previously paid issue fee to the application identified above." Petitioner is advised that, whether a fee is indicated as being due or not, the Issue Fee Transmittal Form **must** be completed and timely submitted to avoid abandonment. Note the language in bold text on the first page of the Notice of Allowance and Fee(s) Due (PTOL-85).

UNITED STATES PATENT AND TRADEMARK OFFICE

Commissioner for Patents
United States Patent and Trademark Office
P.O. Box 1450
Alexandria, VA 22313-1450
www.uspto.gov

Paper No. _____

Date : September 15, 2006

TO : Director, Office of Patent Publication

FROM : Office of the Deputy Commissioner
for Patent Examination Policy

SUBJECT : Withdrawal from Issue of

Applicant(s) :TetsuoTsutsui
Application No. :10/626,024
Filed :July 24, 2003

The above-identified application has been assigned Patent No. 7,116,046 and an issue date of October 3, 2006.

It is hereby directed that this application be withdrawn from issue at the request of the applicant.

Do not refund the issue fee.

The following erratum should be published in the Official Gazette if the above-identified application is published in the OG of October 3, 2006:

"All reference to Patent No. 7,116,046 to Tetsuo Tsutsui of Japan for ORGANIC ELECTROLUMINESCENT DEVICE appearing in the Official Gazette of October 3, 2006 should be deleted since no patent was granted."

Karen Creasy

Karen Creasy
Petitions Examiner
Office of Petitions
Office of the Deputy Commissioner
for Patent Examination Policy

cc: Paul Harrison, MDW-4B03,(FAX-273-5468)
Deneise Boyd, MDE-3D39 (FAX-273-5124)
Mary Louise McAskill, ST-8C15 (FAX 305-4372)
Niomi Farmer, ST-8C14 (FAX-305-4372)
Mary E. Johnson (Cookie), MDE-7C71 (FAX 273-0038
Duane Davis P/OPC MDE-7D89

UNITED STATES PATENT AND TRADEMARK OFFICE

Commissioner for Patents
United States Patent and Trademark Office
P.O. Box 1450
Alexandria, VA 22313-1450
www.uspto.gov

CHUN-POK LEUNG
TOWNSEND AND TOWNSEND AND CREW LLP
TWO EMBARCADERO CENTER
8th FLOOR
SAN FRANCISCO, CALIFORNIA 94111-3834

MAIL

NOV 2 6 2004

DIRECTOR OFFICE
TECHNOLOGY CENTER 2100

In re Application of: Hosoya, et al.
Application No. 10/626,049
Filed: July 23, 2003
For: HIGH-AVAILABILTY DISK CONTROL DEVICE AND FAILURE PROCESSING METHOD THEREOF AND HIGH-AVAILABILTY DISK SUBSYSTEM

**DECISION ON PETITION TO MAKE SPECIAL (ACCELERATED EXAMINATION) UNDER M.P.E.P. §708.02 (VIII)**

This is a response to the petition filed August 2, 2004, under 37 C.F.R. §1.102(d) and M.P.E.P. §708.02 (VIII): Accelerated Examination, to make the above-identified application special.

The Petition is **DISMISSED**.

M.P.E.P. §708.02, Section VIII which sets out the prerequisites for a grantable petition for Accelerated Examination under 37 C.F.R. §1.102(d) states in relevant part:

A new application (one which has not received any examination by the examiner) may be granted special status provided that applicant (and this term includes applicant's attorney or agent) complies with each of the following items:

(a) Submits a petition to make special accompanied by the **fee set forth in 37 CFR 1.17(h)**;

(b) Presents all claims directed to a single invention, or if the Office determines that all the claims presented are not obviously directed to a single invention, will make an election without traverse as a prerequisite to the grant of special status;

(c) Submits a statement(s) that a pre-examination search was made, listing the field of search by class and subclass, publication, Chemical Abstracts, foreign patents, etc. The pre-examination search must be directed to the invention as claimed in the application for which special status is requested. A search made by a foreign patent office satisfies this requirement;

(d) Submits one copy each of the references deemed most closely related to the subject matter encompassed by the claims if said references are not already of record; and

**(e) Submits a detailed discussion of the references, which discussion points out, with the particularity required by 37 CFR 1.111 (b) and (c), how the claimed subject matter is patentable over the references.**

In those instances where the request for this special status does not meet all the prerequisites set forth above, **petitioner will be notified and the defects in the request will be stated**. The application will remain in the status of a new application awaiting action in its regular turn. In those instances where a request is defective in one or more respects, petitioner will be given one opportunity to perfect the request in a renewed petition to make special. If perfected, the request will then be granted. If not perfected in the first renewed petition, any additional renewed petitions to make special may or may not be considered at the discretion of the Group Special Program Examiner.

The petition filed August 2, 2004 fails to adequately meet requirement (e) of the criteria set forth above. With respect to requirement (e), a complete detailed discussion of the (aforementioned most closely related) references has not been provided with the necessary specificity required under 37 CFR 1.111 (b) and (c). Petitioner's submission is deficient in that it merely paraphrases the disclosure and/or abstracts (see for example, the discussion of reference 4 (U. S. Patent 5,615,330), which merely recites the abstract) provided in each reference accompanied by a single statement that all the references do not include the features of the claimed invention. That is, the submission does not satisfy the requirement, as it does not provide a ***detailed discussion*** of the references and it does not point out how the ***claimed subject matter is patentable over the references***.

Petitioner should ensure that the above discussion is directed to how the language of ***each of*** the independent claims is specifically distinguishable and patentable from the references provided in requirement (d) above.

Petition to Make Special **DISMISSED**.

Petitioner is given one opportunity to perfect the petition. Any request for reconsideration must be filed within TWO MONTHS of the mail date of this decision.

Until the renewed petition is submitted, the application will be returned to the examiner's docket to await treatment on the merits in the normal order of examination.

Brian L. Johnson
Special Program Examiner
Technology Center 2100
Computer Architecture, Software and Information Security
571-272-3595

HMJ: 11/19/04

UNITED STATES PATENT AND TRADEMARK OFFICE

Commissioner for Patents
United States Patent and Trademark Office
P.O. Box 1450
Alexandria, VA 22313-1450
www.uspto.gov

MAIL

APR 0 4 2005

DIRECTOR OFFICE
TECHNOLOGY CENTER 2100

TOWNSEND, TOWNSEND and CREW, LLP
TWO EMBARCADERO CENTER, 8TH FLOOR
SAN FRANCISCO, CALIFORNIA 94111-3834

In re Application of : HOSOYA
Application No. 10/626,049
Filed: JULY 23, 2003
For: HIGH-AVAILABILITY DISK CONTROL DEVICE AND FAILURE PROCESSING METHOD THEREOF AND HIGH-AVAILABILITY DISK SUBSYSTEM

DECISION ON RECONSIDERATION OF PETITION FOR ACCELERATED EXAMINATION UNDER M.P.E.P.§708.02(VIII) & 37 C.F.R. 102(d)

This is a decision on the Request for Reconsideration filed January 25, 2005 of the petition to make special under 37 C.F.R. 102(d) and M.P.E.P. § 708.02(VIII): Accelerated Examination, originally filed August 2, 2004.

The Petition is **GRANTED**.

M.P.E.P. § 708.02, Section VIII which sets out the prerequisites for a grantable petition for Accelerated Examination under 37 C.F.R. § 102(d) states in relevant part:

> A new application (one which has not received any examination by the examiner) may be granted special status provided that applicant (and this term includes applicant's attorney or agent) complies with each of the following items:

(a) Submits a petition to make special accompanied by the fee set forth in 37 CFR 1.17(h);

(b) Presents all claims directed to a single invention, or if the Office determines that all the claims presented are not obviously directed to a single invention, will make an election without traverse as a prerequisite to the grant of special status;

(c) Submits a statement(s) that a pre-examination search was made, listing the field of search by class and subclass, publication, Chemical Abstracts, foreign patents, etc. The pre-examination search must be directed to the invention as claimed in the application for which special status is requested. A search made by a foreign patent office satisfies this requirement;

(d) Submits one copy each of the references deemed most closely related to the subject matter encompassed by the claims if said references are not already of record; and

(e) Submits a detailed discussion of the references, which discussion points out, with the particularity required by 37 CFR 1.111 (b) and (c), how the claimed subject matter is patentable over the references.

Petition to Make Special **GRANTED** since all of the requirements for special status under MPEP § 708.02(VIII) have been met.

The application file is being forwarded to the Examiner for accelerated examination in accordance with the procedures set forth in M.P.E.P. §708.02, Section VIII. If the application is subsequently allowed, it will be given priority for printing. See M.P.E.P. §1309.

Brian L. Johnson 3/31/05
Special Program Examiner
Technology Center 2100
Computer Architecture, Software and Information Security
571-272-3595

JC

UNITED STATES PATENT AND TRADEMARK OFFICE

COMMISSIONER FOR PATENTS
UNITED STATES PATENT AND TRADEMARK OFFICE
P.O. BOX 1450
ALEXANDRIA, VA 22313-1450
www.uspto.gov

**MAILED**

FEB 20 2004

**Technology Center 2100**

Joseph S. Incarnato
1008 Tracy Drive
Silver Spring, Maryland 20904

| | | |
|---|---|---|
| In re Application of: Joseph S. Incarnato | ) | DECISION ON PETITION TO |
| Application No. 10/626,074 | ) | MAKE SPECIAL UNDER 37 |
| Filed: July 24, 2003 | ) | C.F.R. §1.102(c) AND MPEP § |
| For: ALPHABET SOUP | ) | 708.02 (IV): APPLICANT'S AGE |
| CRYPTOGRAPHY | ) | |

This is a decision on the petition, filed July 24, 2003, under 37 C.F.R. §1.102(c) and M.P.E.P. §708.02(IV): Applicant's Age, to make the above-identified application special.

A grantable petition to make special under 37 C.F.R. § 1.102 and in accordance with M.P.E.P. § 708.02, Section IV must include a showing, as by a birth certificate or the applicant's statement, that the applicant is sixty five (65) years of age or more. No fee is required for this petition.

The petition includes a statement from applicant, Joseph S. Incarnato, asserting that applicant is sixty five (65) years of age or more. Accordingly, the petition is **GRANTED.**

The application is being forwarded to the examiner for expedited prosecution.

Pinchus M. Laufer
Special Programs Examiner
Technology Center 2100
Computer Security, Architecture, and Software
(703) 306-4160

## SPE RESPONSE FOR CERTIFICATE OF CORRECTION

Paper No.: _____

**DATE** : 09/29/05

**TO SPE OF** : ART UNIT **2134**

**SUBJECT** : Request for Certificate of Correction on Patent No.: 10/626074 6909783

A response is requested with respect to the accompanying request for a certificate of correction.

Please complete this form and return with file, within **7** days to:
Palm location **7580, Certificates of Correction Branch – South Tower – 9A22**
If response is for an IFW, **return to employee (named below) via PUBSCofC Team in MADRAS.**
With respect to the change(s) requested, correcting Office and/or Applicant's errors, should the patent read as shown in the certificate of correction (COCIN)? No new matter should be introduced, nor should the scope or meaning of the claims be changed.

**Thank You For Your Assistance**

**Angela Green**
**Certificates of Correction Branch**
***Tel. No. 703-305-9380 ext. 123***

**The request for issuing the above-identified correction(s) is hereby:**
Note your decision on the appropriate box.

- ☒ **Approved** — **All** changes apply.
- ☐ **Approved in Part** — Specify below which changes **do not** apply.
- ☐ **Denied** — State the reasons for denial below.

**Comments:**

KAMBIZ ZAND
SUPERVISORY PATENT EXAMINER

**SPE** — 2134 **Art Unit**

UNITED STATES PATENT AND TRADEMARK OFFICE

Commissioner for Patents
United States Patent and Trademark Office
P.O. Box 1450
Alexandria, VA 22313-1450
www.uspto.gov
DIW 08-04

MARSHALL, GERSTEIN & BORUN LLP
6300 SEARS TOWER
233 S. WACKER DRIVE
CHICAGO IL 60606

COPY MAILED

AUG 0 6 2004

OFFICE OF PETITIONS

| | |
|---|---|
| In re Application of | : |
| Eby, Smith, Serrault, Vetting, and Gaska | : DECISION REFUSING STATUS UNDER 37 CFR 1.47(a) |
| Application No. 10/626,080 | : |
| Filed: 24 July, 2003 | : |
| Atty Docket No. 29618/38939 | : |

This is in response to the petition filed under 37 CFR 1.47(a) on 6 May, 2004.

The petition is **DISMISSED**.

Rule 47 applicant is given TWO MONTHS from the mailing date of this decision to reply, correcting the below-noted deficiencies. Any reply should be entitled "Request for Reconsideration of Petition Under 37 CFR 1.47(a)," and should only address the deficiencies noted below, except that the reply may include an oath or declaration executed by the non-signing inventor. **FAILURE TO RESPOND WILL RESULT IN ABANDONMENT OF THE APPLICATION.** Extensions of time may be obtained in accordance with 37 CFR 1.136(a).

The above-identified application was filed on 24 July, 2003, without an executed oath or declaration. Accordingly, on 20 April, 2004, Initial Patent Examination Division mailed a Notice to File Missing Parts of Nonprovisional Application, requiring an executed oath or declaration and a surcharge for its late filing. A two (2) month period for reply was set.

In response, on 6 May, 2004, petitioners filed the late-filing surcharge, and a declaration naming David C. Eby, Aaron W. Smith, Jayson J. Serrault, Tobin Vetting, and Gilius A. Gaska as joint inventors, signed by all joint inventors except Serrault on behalf of themselves and joint inventor Serrault.

Petitioners state that joint inventor Serrault was sent a copy of the declaration, but that it was returned as undeliverable.

Petitioners further state that efforts to locate a new address for Serrault have been unsuccessful.

A grantable petition under 37 CFR 1.47(a) requires:

(1) proof that the non-signing inventor cannot be reached or located, notwithstanding diligent effort, or refuses to sign the oath or declaration after having been presented with the application papers (specification, claims and drawings);

(2) an acceptable oath or declaration in compliance with 35 U.S.C. §§ 115 and 116;

(3) the petition fee;

(4) a surcharge of $130 or $65 (small entity) if the petition and/or declaration is not filed at the time of filing the application, and

(5) a statement of the last known address of the non-signing inventor.

The petition lacks item (1).

In regards to item (1), if the application is returned as undeliverable, petitioners should submit a copy of the envelope showing that the envelope addressed to the non-signing inventor at his last known address was returned as undeliverable by the post office. Details of the efforts made to locate the non-signing inventor must be set forth in an affidavit or declaration of facts by a person having first-hand knowledge of the details.

Petitioners have not provided a copy of the envelope addressed to the last known address of the non-signing inventor which was returned as undeliverable by the post office.

Additionally it is noted that a different mailing address is provided for Serrault on the declaration than the address which is stated as the last known address. If the address on the declaration is an address at which Serrault has been known to receive mail, petitioners should attempt to contact him at that address.

In regards to item (2), the declaration contains is defective in that it contains non initialed and/or non-dated alterations.[1] Specifically, there is an uninitialed and/or undated alteration in the signature block for joint inventor Eby. A new oath or declaration in compliance with 37 CFR 1.63 and 1.67, signed by the inventor to whom the error or deficiency relates is

---

[1] See 37 CFR 1.52(c).

required.[2]

The petition fee of $130.00 has been charged to counsel's deposit account, No. 13-2855, as authorized in the present petition.

Further correspondence with respect to this matter should be addressed as follows:

By mail: Mail Stop Petition
Commissioner for Patents
P.O. Box 1450
Alexandria, VA 22313-1450

By FAX: (703) 872-9306
Attn: Office of Petitions

By hand: U.S. Patent and Trademark Office
220 20th Street S.
Customer Window, Mail Stop Petition
Crystal Plaza 2, Lobby, Room 1B03
Arlington, VA 22202

Telephone inquiries related to this decision should be directed to the undersigned at 703-308-6918.

D Wood

Douglas I. Wood
Senior Petitions Attorney
Office of Petitions

[2] 37 CFR 1.67(a)(2).

UNITED STATES PATENT AND TRADEMARK OFFICE

Commissioner for Patents
United States Patent and Trademark Office
P.O. Box 1450
Alexandria, VA 22313-1450
www.uspto.gov
DNW 09-04

MARSHALL, GERSTEIN & BORUN LLP
6300 SEARS TOWER
233 S. WACKER DRIVE
CHICAGO IL 60606

COPY MAILED
SEP 0 7 2004
OFFICE OF PETITIONS

| | |
|---|---|
| In re Application of | : |
| Eby, Smith, Serrault, Vetting, and | : DECISION REFUSING STATUS |
| Gaska | : UNDER 37 CFR 1.47(a) |
| Application No. 10/626,080 | : |
| Filed: 24 July, 2003 | : |
| Atty Docket No. 29618/38939 | : |

This is in response to the renewed petition filed under 37 CFR 1.47(a) on 23 August, 2004.

The petition is **DISMISSED**.

Rule 47 applicant is given TWO MONTHS from the mailing date of this decision to reply, correcting the below-noted deficiencies. Any reply should be entitled "Request for Reconsideration of Petition Under 37 CFR 1.47(a)," and should only address the deficiencies noted below, except that the reply may include an oath or declaration executed by the non-signing inventor. **FAILURE TO RESPOND WILL RESULT IN ABANDONMENT OF THE APPLICATION.** Extensions of time may be obtained in accordance with 37 CFR 1.136(a).

The above-identified application was filed on 24 July, 2003, without an executed oath or declaration. Accordingly, on 20 April, 2004, Initial Patent Examination Division mailed a Notice to File Missing Parts of Nonprovisional Application, requiring an executed oath or declaration and a surcharge for its late filing. A two (2) month period for reply was set. In response, on 6 May, 2004, petitioners filed the late-filing surcharge, and a declaration naming David C. Eby, Aaron W. Smith, Jayson J. Serrault, Tobin Vetting, and Gilius A. Gaska as joint inventors, signed by all joint inventors except Serrault on behalf of themselves and joint inventor Serrault. The petition was dismissed on 6 August, 2004.

On 23 August, 2004, the present renewed petition was filed, accompanied by a declaration signed by joint inventor Serrault.

A grantable petition under 37 CFR 1.47(a) requires:

(1) proof that the non-signing inventor cannot be reached or located, notwithstanding diligent effort, or refuses to sign the oath or declaration after having been presented with the application papers (specification, claims and drawings);

(2) an acceptable oath or declaration in compliance with 35 U.S.C. §§ 115 and 116;

(3) the petition fee;

(4) a surcharge of $130 or $65 (small entity) if the petition and/or declaration is not filed at the time of filing the application, and

(5) a statement of the last known address of the non-signing inventor.

The petition lacks item (2).

In regards to item (2), the declaration contains is defective in that it contains non initialed and/or non-dated alterations.[1] Specifically, there is an uninitialed and/or undated alteration in the signature block for joint inventor Eby. A new oath or declaration in compliance with 37 CFR 1.63 and 1.67, <u>signed by the inventor to whom the error or deficiency relates</u> is required.[2]

Further correspondence with respect to this matter should be addressed as follows:

By mail: Mail Stop Petition
Commissioner for Patents
P.O. Box 1450
Alexandria, VA 22313-1450

By FAX: (703) 872-9306
Attn: Office of Petitions

---

[1] <u>See</u> 37 CFR 1.52(c).

[2] 37 CFR 1.67(a)(2).

By hand: U.S. Patent and Trademark Office
220 20th Street S.
Customer Window, Mail Stop Petition
Crystal Plaza 2, Lobby, Room 1B03
Arlington, VA 22202

Telephone inquiries related to this decision should be directed to the undersigned at 703-308-6918.

DWood

Douglas I. Wood
Senior Petitions Attorney
Office of Petitions

UNITED STATES PATENT AND TRADEMARK OFFICE

Commissioner for Patents
United States Patent and Trademark Office
P.O. Box 1450
Alexandria, VA 22313-1450
www.uspto.gov
DIW 01-05

MARSHALL, GERSTEIN & BORUN LLP
6300 SEARS TOWER
233 S. WACKER DRIVE
CHICAGO IL 60606

**COPY MAILED**

JAN 1 0 2005

**OFFICE OF PETITIONS**

| | |
|---|---|
| In re Application of | : |
| Eby, Smith, Serrault, Vetting, and | : DECISION NOTING JOINDER OF |
| Gaska | : INVENTOR AND PETITION |
| Application No. 10/626,080 | : UNDER 37 CFR 1.47(a) MOOT |
| Filed: 24 July, 2003 | : |
| Atty Docket No. 29618/38939 | : |

Papers filed on 26 November, 2004, in response to the renewed decision dismissing petition mailed on 7 September, 2004, included a Declaration in compliance with 37 CFR 1.63. A declaration signed by previously non-signing inventor Jayson Serrault was filed on 23 August, 2004.

In view of the joinder of the inventor, further consideration under 37 CFR 1.47(a) is moot; this application does not have any rule 1.47(a) status and no such status should appear on the file wrapper. This application need not be returned to this office for any further consideration under 37 CFR 1.47(a).

This application will be referred to Technology Center Art Unit 3634 for further processing.

Telephone inquiries related to this decision should be directed to the undersigned at (571)272-3231.

D Wood

Douglas I. Wood
Senior Petitions Attorney
Office of Petitions

DAC/fw

**PATENT**
**29618/38938**

OIPE JC73
AUG 2 3 2004
PATENT & TRADEMARK OFFICE

# IN THE UNITED STATES PATENT AND TRADEMARK OFFICE

Applicant: EBY, ET AL.

Serial No.: 10/626,081

Filed: JULY 24, 2003

Title: TASK TRAYS

Group Art Unit: NOT YET ASSIGNED

Examiner: NOT YET ASSIGNED

I hereby certify that this paper is being deposited with the United States Postal Service as first class mail, postage prepaid, in an envelope addressed to: Mail Stop Petitions, Commissioner for Patents, P.O. Box 1450, Alexandria, VA 22313-1450, on **August 17, 2004.**

Thomas A. Miller
Reg. No.: 40,091

## RESPONSE TO DECISION ON PETITION UNDER 37 C.F.R. §1.47(a)

Mail Stop Petitions
Commissioner for Patents
P.O. Box 1450
Alexandria, VA 22313-1450

Dear Sir:

This response is filed in reply to a decision by the Office of Petitions refusing this application status under 37 C.F.R. §1.47(a), mailed on July 21, 2004.

Enclosed please find a declaration signed and dated by all inventors. By way of this filing, it is believed that the Petition is rendered moot. Applicants request that the declaration be accepted and this application proceed to substantive examination.

It is believed that no additional fee is due at this time. If there are any additional fees due, the Commissioner is directed to charge or debit Deposit Account No. 13-2855 under order number 29618/38938. Should any questions arise over the

form or substance of this reply, the office is encouraged to contact the undersigned attorney at the telephone number and address listed below.

Respectfully submitted for,

MARSHALL, GERSTEIN & BORUN LLP

**August 17, 2004**

By: _____

Thomas A. Miller
Reg. No.: 40,091
6300 Sears Tower
233 South Wacker Drive
Chicago, Illinois 60606-6402
(312) 474-6300

O I P E JC73
AUG 2 3 2004
PATENT & TRADEMARK OFFICE

# IN THE UNITED STATES PATENT AND TRADEMARK OFFICE

## DECLARATION FOR PATENT APPLICATION

As a below named inventor, I hereby declare that:

My residence, post office address and citizenship are as stated below next to my name.

I believe I am an original, first and joint inventor of the subject matter which is claimed and for which a patent is sought on the invention entitled:

TASK TRAYS

the specification of which was filed on July 24, 2003 as Application No. 10/626,081.

I hereby state that I have reviewed and understand the contents of the above identified specification, including the claims, as amended by an amendment, if any, specifically referred to herein.

I acknowledge the duty to disclose all information known to me that is material to patentability in accordance with Title 37, Code of Federal Regulations, § 1.56.

FOREIGN PRIORITY CLAIM

I hereby claim foreign priority benefits under Title 35, United States Code § 119(a)-(d) of any foreign application(s) for patent or inventor's certificate listed below and have also identified below any foreign application for patent or inventor's certificate having a filing date before that of the application on which priority is claimed:

[x] no such foreign applications have been filed

[ ] such foreign application have been filed as follows:

EARLIEST FOREIGN APPLICATION(S), IF ANY FILED WITHIN 12 MONTHS (6 MONTHS FOR DESIGN) PRIOR TO THIS U.S. APPLICATION

| Application Number | Country | Date of Filing (dd/mm/yyyy) | Priority Claimed Under 35 USC 119 |
|---|---|---|---|
| | | | ___ Yes No ___ |
| | | | ___ Yes No ___ |
| | | | ___ Yes No ___ |

ALL FOREIGN APPLICATION(S), IF ANY FILED MORE THAN 12 MONTHS (6 MONTHS FOR DESIGN) PRIOR TO THIS U.S. APPLICATION

| Application Number | Country | Date of Filing (dd/mm/yyyy) |
|---|---|---|
| | | |
| | | |
| | | |

CLAIM FOR BENEFIT OF EARLIER U.S. PROVISIONAL APPLICATIONS

I hereby claim priority benefits under Title 35, United States Code §119(e), of any United States provisional patent application(s) listed below:

[x] no such U.S. provisional applications have been filed.

[ ] such U.S. provisional application have been filed as follows:

| Application Number | Date of Filing (dd/mm/yyyy) | Priority Claimed Under 35 USC 119 |
|---|---|---|
| | | ___ Yes No ___ |
| | | ___ Yes No ___ |
| | | ___ Yes No ___ |

CLAIM FOR BENEFIT OF EARLIER U.S./PCT APPLICATION(S)

I hereby claim the benefit under Title 35, United States Code, §120 of the United States application(s) listed below and, insofar as the subject matter of each of the claims of this application is not disclosed in the prior United States application in the manner provided by the first paragraph of Title 35, United States Code, §112, I acknowledge the duty to disclose all information that is material to patentability in accordance with Title 37, Code of Federal

Regulations, §1.56 which became available to me between the filing date of the prior application and the national or PCT international filing date of this application:

[x] no such U.S./PCT applications have been filed.

[ ] such U.S./PCT application have been filed as follows:

| Application Number | Date of Filing (dd/mm/yyyy) |
|---|---|
| | |
| | |
| | |

I hereby declare that all statements made herein of my own knowledge are true and that all statements made on information and belief are believed to be true; and further that these statements were made with the knowledge that willful false statements and the like so made are punishable by fine or imprisonment, or both, under Section 1001 of Title 18 of the United States Code and that such willful false statements may jeopardize the validity of the application or any patent issued thereon.

I hereby appoint:

All practitioners at Customer Number 04743

all of **MARSHALL, GERSTEIN & BORUN LLP**, 233 S. Wacker Drive, Suite 6300, Sears Tower, Chicago, Illinois 60606-6357, jointly, and each of them severally, my attorneys at law/patent agent(s), with full power of substitution, delegation and revocation, to prosecute this application, to make alterations and amendments therein, to receive the patent, and to transact all business in the U. S. Patent and Trademark Office connected therewith.

Please mail all correspondence to James P. Zeller, whose address is:

**MARSHALL, GERSTEIN & BORUN LLP**
233 S. Wacker Drive, Suite 6300
Sears Tower
Chicago, Illinois 60606-6357

Please direct telephone calls to: James P. Zeller at (312) 474-6603.

Please direct facsimiles to: (312) 474-0448

| | |
|---|---|
| Full name of sole or first inventor<br>David C. Eby | |
| Sole or first inventor's signature<br>David C. Eby | Date<br>8/13/04 |
| Residence<br>Black Earth, Wisconsin | |
| Citizenship US | |
| Mailing Address<br><br>3991 Forshaug Road<br>Black Earth, Wisconsin 53515 | |

| | |
|---|---|
| Full name of second inventor, if any<br>Gilius A. Gaska | |
| Second inventor's signature | Date |
| Residence<br>Median, Ohio | |
| Citizenship US | |
| Mailing Address<br><br>1268 Freeport Drive<br>Medina, Ohio 44256 | |

| | |
|---|---|
| Full name of third inventor, if any<br>Aaron W. Smith | |
| Third inventor's signature | Date |
| Residence<br>Wooster, Ohio | |
| Citizenship US | |
| Mailing Address<br><br>1474 Smith Drive<br>Wooster, Ohio 44691 | |

| | |
|---|---|
| Full name of fourth inventor, if any<br>Jayson J. Serrault | |
| Fourth inventor's signature | Date |
| Residence<br>Middleton, Wisconsin | |
| Citizenship US | |
| Mailing Address<br><br>1228 North High Point Road<br>Middleton, Wisconsin 53562 | |

| | |
|---|---|
| Full name of sole or first inventor<br>David C. Eby | |
| Sole or first inventor's signature | Date |
| Residence<br>Black Earth, Wisconsin | |
| Citizenship US | |
| Mailing Address<br><br>3991 Forshaug Road<br>Black Earth, Wisconsin 53515 | |

| | |
|---|---|
| Full name of second inventor, if any<br>Gilius A. Gaska | |
| Second inventor's signature Gilius A. Gaska | Date 2.27.04 |
| Residence<br>Median, Ohio | |
| Citizenship US | |
| Mailing Address<br><br>1268 Freeport Drive<br>Medina, Ohio 44256 | |

| | |
|---|---|
| Full name of third inventor, if any<br>Aaron W. Smith | |
| Third inventor's signature | Date 3.1.04 |
| Residence<br>Wooster, Ohio | |
| Citizenship US | |
| Mailing Address<br><br>1474 Smith Drive<br>Wooster, Ohio 44691 | |

| | |
|---|---|
| Full name of fourth inventor, if any<br>Jayson J. Serrault | |
| Fourth inventor's signature | Date |
| Residence<br>Middleton, Wisconsin | |
| Citizenship US | |
| Mailing Address<br><br>1228 North High Point Road<br>Middleton, Wisconsin 53562 | |

| | |
|---|---|
| Full name of sole or first inventor<br>David C. Eby | |
| Sole or first inventor's signature | Date |
| Residence<br>Black Earth, Wisconsin | |
| Citizenship US | |
| Mailing Address<br><br>3991 Forshaug Road<br>Black Earth, Wisconsin 53515 | |

| | |
|---|---|
| Full name of second inventor, if any<br>Gilius A. Gaska | |
| Second inventor's signature | Date |
| Residence<br>Median, Ohio | |
| Citizenship US | |
| Mailing Address<br><br>1268 Freeport Drive<br>Medina, Ohio 44256 | |

| | |
|---|---|
| Full name of third inventor, if any<br>Aaron W. Smith | |
| Third inventor's signature | Date |
| Residence<br>Wooster, Ohio | |
| Citizenship US | |
| Mailing Address<br><br>1474 Smith Drive<br>Wooster, Ohio 44691 | |

| | |
|---|---|
| Full name of fourth inventor, if any<br>Jayson J. Serrault | |
| Fourth inventor's signature | Date 3/18/2004 |
| Residence<br>Middleton, Wisconsin | |
| Citizenship US | |
| Mailing Address<br><br>1228 North High Point Road<br>Middleton, Wisconsin 53562 | |

UNITED STATES PATENT AND TRADEMARK OFFICE

COMMISSIONER FOR PATENTS
UNITED STATES PATENT AND TRADEMARK OFFICE
P.O. BOX 1450
ALEXANDRIA, VA 22313-1450
www.uspto.gov

W. DANIEL SWAYZE, Jr.
TEXAS INSTRUMENTS INCORPORATED
P. O. BOX 655474
MS 3999
DALLAS, TEXAS 75265

**COPY MAILED**

SEP 19 2005

**OFFICE OF PETITIONS**

| | | |
|---|---|---|
| In re Application of | : | |
| El-Sherif | : | |
| Application No. 10/626,091 | : | DECISION ON PETITION |
| Filed: July 24, 2003 | : | UNDER 37 CFR 1.137(b) |
| Attorney Docket No. TI-35811 | : | |

This is a decision on the petition under 37 CFR 1.137(b), submitted July 15,2005, to revive the above-identified application.

The petition is **DISMISSED**.

Any request for reconsideration of this decision must be submitted within TWO (2) MONTHS from the mail date of this decision. Extensions of time under 37 CFR 1.136(a) are permitted. The reconsideration request should include a cover letter entitled "Renewed Petition under 37 CFR 1.137(b)." This is **not** a final agency action within the meaning of 5 U.S.C. § 704.

A grantable petition under 37 CFR 1.137(b) must be accompanied by: (1) the required reply, unless previously filed; (2) the petition fee as set forth in 37 CFR 1.17(m); (3) a statement that the entire delay in filing the required reply from the due date for the reply until the filing of a grantable petition pursuant to 37 CFR 1.137(b) was unintentional; and (4) any terminal disclaimer (and fee as set forth in 37 CFR 1.20(d)) required by 37 CFR 1.137(c). Where there is a question as to whether either the abandonment or the delay in filing a petition under 37 CFR 1.137 was unintentional, the Commissioner may require additional information. See MPEP 711.03(c)(III)(C) and (D).

The instant petition lacks item(s) (1) the required reply.

This application became abandoned, by operation of law, for failure to timely reply within the three month shortened statutory period set in the final Office Action mailed on October 21, 2004 to the address identified above. No extensions of time have been obtained pursuant to the provisions of 37 CFR §1.136(a). The date of abandonment of this application was January 22, 2005. An amendment after final was filed January 17, 2005 but failed to place the application in condition for allowance. An advisory action in response to the amendment after final was mailed on March 11, 2005 to the address above.

MPEP 711.03(c) sets forth the required reply to a final rejection includes either (a) a Notice of appeal and appeal fee; (b) an amendment that places the application in condition for allowance; or (c) the filing of an RCE. Petitioner's request "that the deposit account be charged for this Petition to Revive and the enclosed Amendment be treated as a response to the office action" is insufficient authorization for any of the optional required responses to a final action.

Petitioner argues that there was inconsistency between the Office Action Summary Form PTOL-326 and the action on the merits. Note that the body of the action clearly sets forth that the action was made final in the last paragraph. MPEP 707 states that under the current practice, the examiner signifies on the Office Action Summary Form PTOL-326 certain information including the period set for reply, any attachments, and a "Summary of Action," which is the position taken on all the claims. Note further that the Form PTOL-326 does not list what type of rejection is being made, thus counsel must review the entire body of the action to ascertain the merits of the action and prepare a complete and proper reply to the outstanding office action. The Office Action Summary Form PTOL-326 serves as a mere summary of the action and not the merits of the action.

It is unclear from the record whether the attorney of record reviewed a copy of the advisory action mailed March 11, 2005, thus a copy is being provided with this decision.

Further correspondence with respect to this matter should be addressed as follows:

By Mail: Mail Stop PETITION
Commissioner for Patents
Post Office Box 1450
Alexandria, VA 22313-1450

By hand: Customer Service Window
Mail Stop Petitions
Randolph Building
401 Dulany Street
Alexandria, VA 22314

The centralized facsimile number is **(571) 273-8300.**

Telephone inquiries concerning this decision should be directed to Angela Ortiz at (571) 272-6051, or in her absence, the undersigned at (571) 272-3217.

Frances Hicks for
Brian Hearn
Petitions Examiner
Office of Petitions

Attachment: Copy of Advisory Action (3/11/05)

UNITED STATES PATENT AND TRADEMARK OFFICE

Commissioner for Patents
United States Patent and Trademark Office
P.O. Box 1450
Alexandria, VA 22313-1450
www.uspto.gov

Paper No.

SCULLY, SCOTT, MURPHY & PRESSER
400 GARDEN CITY PLAZA
GARDEN CITY, NEW YORK 11530

COPY MAILED
SEP 0 8 2004
OFFICE OF PETITIONS

| | | |
|---|---|---|
| In re Application of | : | |
| Raul Curbelo | : | |
| Application No. 10/626,094 | : | |
| Filed: July 24, 2003 | : | DECISION GRANTING |
| Title of Invention: INFRARED SOURCE | : | STATUS UNDER |
| FOR SPECTROMETERS | : | 37 CFR 1.47(b) |

This is in response to a petition under 37 CFR 1.47(b), filed June 23, 2004, to allow a person to whom an inventor has assigned or agreed in writing to assign the invention, or who otherwise shows sufficient proprietary interest in the matter justifying such action, to make application on behalf of and as agent for all inventors. The one (1) month extension of time requested is hereby granted.

The petition is **granted**.

The above-identified application and papers have been reviewed and found in compliance with 37 CFR 1.47(b). This application is hereby accorded Rule 1.47(b) status.

Petitioner has shown that the non-signing inventor, Raul Curbelo, refuses to join in the application.

As provided in Rule 1.47(b), this Office will forward notice of this application's filing to the non-signing inventors at the addresses given in the Petition. Notice of the filing of this application will also be published in the Official Gazette.

The application file is being returned to the Office of Initial Patent Examination for continued processing.

Telephone inquiries related to this decision may be directed to the undersigned at (703) 305-0014.

Derek L. Woods
Petitions Attorney
Office of Petitions

UNITED STATES PATENT AND TRADEMARK OFFICE

Commissioner for Patents
United States Patent and Trademark Office
P.O. Box 1450
Alexandria, VA 22313-1450
www.uspto.gov

SHEPPARD MULLIN RICHTER & HAMPTON LLP
333 SOUTH HOPE ST
48TH FLOOR
LOS ANGELES CA 90071-1448

**COPY MAILED**

APR 17 2006

**OFFICE OF PETITIONS**

| | | |
|---|---|---|
| In re Application of | | |
| Ohkubo, et al. | : | |
| Application No. 10/626,104 | : | DECISION ON |
| Filed: July 23, 2003 | : | PETITION |
| Attorney Docket No. 01ZS-105709 | : | |

This is in response to the petition, filed January 18, 2006, to revive an unintentionally abandoned application under 37 CFR 1.137(b).

The petition is **DISMISSED**.

Any request for reconsideration of this decision must be submitted within TWO (2) MONTHS from the mail date of this decision. Extensions of time under 37 CFR 1.136(a) are permitted. The reconsideration request should include a cover letter entitled "Renewed Petition Under 37 CFR 1.137(b)." This is **not** a final agency decision within the meaning of 5 USC 704.

The above-identified application became abandoned for failure to timely pay the issue fee as required by the Notice of Allowance mailed on October 14, 2005. This notice set a statutory period for reply of three months. No issue fee having been received, the above-identified application became abandoned on January 15, 2005. The mailing of this decision precedes the mailing of a Notice of Abandonment.

Receipt of the $1,400 issue fee and the $300 publication fee is acknowledged. However, petitioner's deposit account did not contain sufficient funds to charge the $1,500 petition fee. The petition fee must be filed before the petition can be considered on the merits.

The file does not indicate a change of address has been submitted, although the address given on the petition differs from the address of record. If appropriate, a change of address should be filed in accordance with MPEP 601.03. A courtesy copy of this decision is being mailed to the address given on the petition; however, the Office will mail all future correspondence solely to the address of record.

Further correspondence concerning this application should be addressed as follows:

By mail: Mail Stop Petitions
Commissioner for Patents
P.O. Box 1450
Alexandria VA 22313-1450

By FAX: (571)273-8300
Attn: Office of Petitions

Telephone inquiries related to this decision should be directed to the undersigned at (571)272-3207.

Cliff Congo
Petitions Attorney
Office of Petitions

cc: Sheppard Mullin Richter & Hampton LLP
Four Embarcadero Center
17th Floor
San Francisco, CA 94111

UNITED STATES PATENT AND TRADEMARK OFFICE

Commissioner for Patents
United States Patent and Trademark Office
P.O. Box 1450
Alexandria, VA 22313-1450
www.uspto.gov

COPY MAILED
MAY 3 1 2006
OFFICE OF PETITIONS

SHEPPARD MULLIN RICHTER & HAMPTON LLP
333 SOUTH HOPE ST
48TH FLOOR
LOS ANGELES CA 90071-1448

In re Application of
Ohkubo, et al. :
Application No. 10/626,104 : DECISION ON
Filed: July 23, 2003 : PETITION
Attorney Docket No. 01ZS-105709 :

This is in response to the renewed petition to revive under 37 CFR 1.137(b), filed May 22, 2005.

The petition under 37 CFR 1.137(b) is **GRANTED**.

The above-identified application became abandoned for failure to timely pay the issue fee as required by the Notice of Allowance mailed on October 14, 2005. This notice set a statutory period for reply of three months. No issue fee having been received, the above-identified application became abandoned on January 15, 2005. Applicants filed a petition to revive under 37 CFR 1.137(b) on January 18, 2006. However, the petition was dismissed in a decision mailed on April 17, 2006, because applicant did not submit the petition fee.

With the instant petition, petitioner paid the petition fee. The other requirements for a grantable petition were met with the petition filed January 18, 2006.

The application is being forwarded to the Office of Patent Publication for processing into a patent.

Telephone inquiries related to this decision should be directed to the undersigned at (571)272-3207.

Cliff Congo
Petitions Attorney
Office of Petitions

UNITED STATES PATENT AND TRADEMARK OFFICE

Commissioner for Patents
United States Patent and Trademark Office
P.O. Box 1450
Alexandria, VA 22313-1450
www.uspto.gov

RYAN, MASON & LEWIS, LLP
1300 POST ROAD
SUITE 205
FAIRFIELD CT 06824

COPY MAILED
JAN 29 2010

| | | |
|---|---|---|
| In re Application of | : | |
| Riedl, et al. | : | |
| Application No. 10/626,114 | : | ON APPLICATION FOR |
| Filed: July 24, 2003 | : | PATENT TERM ADJUSTMENT |
| Docket No. 61575.1034 // | : | |
| TWC-IPV-03-13/1033-14 | | |

This is in response to the APPLICATION FOR PATENT TERM ADJUSTMENT, filed October 28, 2009. Applicants submit that the correct patent term adjustment to be indicated on the patent is one thousand four hundred twenty-one (1,421) days, not one thousand one hundred thirty-five (1,135) days as calculated by the Office as of the mailing of the initial determination of patent term adjustment. Applicants request this correction solely on the basis that the Office will take in excess of three years to issue this patent.

As the instant application for patent term adjustment requests reconsideration of the patent term adjustment as it relates to the Office's failure to issue the patent within 3 years of the filing date, the application for patent term adjustment under 37 CFR 1.705(b) is **DISMISSED as PREMATURE**.

Knowledge of the actual date the patent issues is required to calculate the amount, if any, of additional patent term patentee is entitled to for Office failure to issue the patent within 3 years. See § 1.702(b). This is true even where a request for continued examination (RCE) was filed. The computer will not undertake the § 1.702(b) calculation until the actual date of issuance of the patent has been determined. Likewise, the computer will not calculate any further Office delay under § 1.702(a)(4) or applicant delay under § 1.704(c)(10) until the actual date of issuance of the patent has been determined. As

such, the Office can not make a determination on the correctness of the patent term adjustment until the patent has issued.

Requesting reconsideration of the patent term adjustment to be indicated on the patent under 37 CFR 1.705(b) based on the initial determination of patent term adjustment and a projected issuance date of the patent or even the filing date of the request for continued examination is premature. Accordingly, it is appropriate to dismiss as premature such a request.

Rather than file an application for patent term adjustment under 37 CFR 1.705(b) contesting the 37 CFR 1.702(b) calculation at the time of the mailing of the notice of allowance, applicants are advised that they may wait until the time of the issuance of the patent and file a request for reconsideration of the patent term adjustment pursuant to 37 CFR 1.705(d). As the USPTO does not calculate the amount of time earned pursuant to 37 CFR 1.702(b) until the time of the issuance of the patent, the Office will consider any request for reconsideration of the patent term adjustment due to an error in the calculation of 37 CFR 1.702(b) to be timely if the request for reconsideration is filed within two months of the issuance of the patent. However, as to all other bases for contesting the initial determination of patent term adjustment received with the notice of allowance, applicants must timely file an application for patent term adjustment prior to the payment of the issue fee[1].

The Office acknowledges submission of the $200.00 fee set forth in 37 CFR 1.18(e) for consideration of the application for patent term adjustment under 37 CFR 1.705(b).

Any request for reconsideration of the patent term adjustment indicated on the patent must be timely filed within 2 months after issuance pursuant to 37 CFR 1.705(d) and must include payment of the required fee under 37 CFR 1.18(e).

---

[1] For example, if applicant disputes both the calculation of patent term adjustment under 37 CFR 1.702(a)(1) for Office failure to mail a first Office action or notice of allowance not later than fourteen months after the date on which the application was filed and under 37 CFR 1.702(b) for Office failure to issue a patent within three years of the actual filing date of the application, then applicant must still timely file an application for patent term adjustment prior to the payment of the issue fee to contest the calculation of Office delay in issuing a first Office action or notice of allowance. See 37 CFR 1.705(b) and 35 U.S.C. 154(b)(3)(B). A dispute as to the calculation of the §1.702(a)(1) period raised on request for reconsideration of patent term adjustment under 37 CFR 1.705(d) will be dismissed as untimely filed.

The Office of Data Management has been advised of this decision. This application is being referred to the Office of Data Management for issuance of the patent.

Telephone inquiries specific to this decision should be directed to the undersigned at (571) 272-3219.

Nancy Johnson
Senior Petitions Attorney
Office of Petitions

UNITED STATES PATENT AND TRADEMARK OFFICE

UNITED STATES DEPARTMENT OF COMMERCE
United States Patent and Trademark Office
Address: COMMISSIONER FOR PATENTS
P.O. Box 1450
Alexandria, Virginia 22313-1450
www.uspto.gov

PEARNE & GORDON LLP
1801 EAST 9TH STREET
SUITE 1200
CLEVELAND, OH 44114-3108

Mail Date: 04/21/2010

| | | |
|---|---|---|
| **Applicant** | : Takahiro Fukagawa | : DECISION ON REQUEST FOR |
| **Patent Number** | : 7630536 | : RECALCULATION of PATENT |
| **Issue Date** | : 12/08/2009 | : TERM ADJUSTMENT IN VIEW |
| **Appliction No** | : 10/626,140 | : OF WYETH AND NOTICE OF INTENT TO |
| **Filed** | : 07/24/2003 | : ISSUE CERTIFICATE OF CORRECTION |
| | | : |

The Request for Recalculation is **GRANTED** to the extent indicated.

The patent term adjustment has been determined to be **924** days. The USPTO will *sua sponte* issue a certificate of correction reflecting the amount of PTA days determined by the recalculation.

Prior to the issuance of the certificate of correction, the USPTO will afford patentee an opportunity to be heard and request reconsideration. Accordingly, patentee has **one month or thirty (30) days**, whichever is longer, to file a request for reconsideration of this patent term adjustment calculation. See 35 U.S.C. 154(b)(3)(B)(ii) and 37 CFR 1.322(a)(4). No extensions of time will be granted under 37 CFR 1.136.

Patentee should use document code PET.OP if electronically filing a request for reconsideration of this patent term adjustment calculation. The patentee must also include the information required by 37 CFR 1.705(b)(2) and the fee required by 37 CFR 1.18(e). If patentee does not file a timely request for reconsideration of this patent term adjustment calculation including the information required by 37 CFR 1.705(b)(2) and the fee required by 37 CFR 1.18(e), the USPTO will issue a certificate of correction reflecting the PTA determination noted above.

Patentee should be aware that in order to preserve the right to review in the United States District Court for the District of Columbia of the USPTO patent term adjustment determination, patentee must ensure that he or she also take the steps required under 35 U.S.C. 154(b)(4)(A) in a timely manner. Nothing in the request for recalculation should be construed as providing an alternative time frame for commencing a civil action under 35 U.S.C. 154(b)(4)(A).

Any questions concerning this decision should be directed to the Office of Patent Legal Administration at 571-272-7702.

UNITED STATES PATENT AND TRADEMARK OFFICE

Commissioner for Patents
United States Patent and Trademark Office
P.O. Box 1450
Alexandria, VA 22313-1450
www.uspto.gov

MAY 20 2009

3M INNOVATIVE PROPERTIES COMPANY
PO BOX 33427
ST. PAUL MN 55133-3427

| | |
|---|---|
| *In re* Application of: | : |
| Burgio et al. | : PETITION DECISION |
| Serial No.: 10/626,142 | : |
| Filed: July 24, 2003 | : |
| Attorney Docket No.: **58359US003** | |

This is in response to the petition filed by applicants under 37 CFR § 1.181(a) on May 7, 2009, to request designation of New Grounds of Rejection in the Examiner's Answer mailed March 9, 2009, pursuant to MPEP § 1207.03 (IV).

BACKGROUND

On June 6, 2008, the examiner mailed a final Office action setting a three month statutory limit for reply. At the time this Office action was mailed, claims 1-3, 5-17, 19-25, 27-32 34-43 and 45-80 were pending and rejected. In this final Office action, the examiner rejected claims 1-3, 5, 8-11, 14-17, 19, 22, 30-32, 34, 36-43, 45-64, and 69-80 under 35 U.S.C. 103(a) as being unpatentable over Mitra et al. in view of Majeti et al.; rejected claims 6, 7, 12, 13, 20, 21, 23-25, 27-29 and 65-68 under 35 U.S.C. 103(a) as being unpatentable over Mitra et al. in view of Majeti et al., the combination being taken in further view of Aasen et al.; and rejected claims 30-32, 34, 35, 37-43, 45, 50-52 and 60-68 under 35 U.S.C. 103(a) as being unpatentable over Rozzi et al. in view of Majeti et al.

On August 6, 2008, applicants filed an amendment after final requesting reconsideration and withdrawal of the rejections set forth in the final Office action of June 6, 2008.

On September 2, 2008, the examiner mailed an advisory action indicating the request for reconsideration has been considered but does not place the case in condition for allowance.

On September 8, 2008, a Notice of Appeal was filed.

On November 7, 2008, applicants filed an Appeal Brief, appealing to the Board of Appeals from the examiner regarding the examiner's final rejection of the claims.

On March 9, 2009, an Examiner's Answer was mailed by the examiner. In this Examiner's Answer, the examiner rejected claims 1-3, 5, 8-11, 14-17, 19, 22, 30-32, 34, 36-43, 45-48, and

69-80 under 35 U.S.C. 103(a) as being unpatentable over Mitra et al. in view of Majeti et al.; rejected claims 6, 7, 12, 13, 20, 21, 23-25, 27-29, 49 and 65-68 under 35 U.S.C. 103(a) as being unpatentable over Mitra et al. in view of Majeti et al., the combination being taken in further view of Aasen et al.; and rejected claims 30-32, 34, 35, 37-43, 45, 50-52 and 60-68 under 35 U.S.C. 103(a) as being unpatentable over Rozzi et al. in view of Majeti et al.

In response thereto, appellants filed this petition under 37 CFR § 1.181(a) on May 7, 2009, requesting the designation of New Grounds of Rejection in the Examiner's Answer mailed March 9, 2009, pursuant to MPEP § 1207.03 (IV).

DISCUSSION

The petition and the file history have been carefully considered.

In the petition filed on May 7, 2009, appellants argue that the Examiner's Answer mailed on March 9, 2009 contained a new ground of rejection which was not appropriately identified by the examiner. Specifically, appellants' argue the Examiner added a heretofore uncited document in Section (8), Evidence Relied Upon (page 4 of the Examiner's Answer mailed March 9, 2009). The Examiner listed the "Carbonyl Compounds" document on a PTO-892 form attached to the Examiner's Answer mailed March 9, 2009, thus confirming that the document was newly cited. Appellants further note that the document was used to support the Examiner's arguments on page 9, lines 5-7 of the Examiner's Answer mailed March 9, 2009.

It is Appellants position, in view of the newly cited art relied upon by the Examiner, that each of the present rejections constitutes a New Ground of Rejection pursuant to M.P.E.P. §1207.03(III):

> *A new prior art reference >applied or< cited for the first time in an examiner's answer generally will constitute a new ground of rejection. If the citation of a new prior art reference is necessary to support a rejection, it must be included in the statement of rejection, which would be considered to introduce a new ground of rejection. Even if the prior art reference is cited to support the rejection in a minor capacity, it should be positively included in the statement of rejection. In re Hoch, 428 F.2d 1341, 1342 n.3, 166 USPQ 406, 407 n. 3 (CCPA 1970). **>Where< a newly cited reference is added merely as evidence of the prior ** statement made by the examiner >as to what is "well-known" in the art which was challenged for the first time in the appeal brief<, the citation of the reference in the examiner's answer would not >ordinarily< constitute a new ground of rejection within the meaning of 37 CFR *> 41.39(a)(2)< .*

Appellants also argue in the final Office action mailed June 6, 2008, the examiner listed claims 6-7, 12-13, 20-21, 23-25, 27-29, and 65-68 as rejected under 33 U.S.C. §103(a) as unpatentable

over Mitra et al. in view of Majeti et al., the combination being taken in further view of Aasen et al. The Examiner's Answer included claim 49 in this rejection. As such, Appellants are interpreting the inclusion of claim 49 as a New Ground of Rejection. However, as noted above, there was no indication in the Examiner's Answer that a New Ground of Rejection was (A) approved by a Technology Center (TC) Director or designee; and (13) prominently identified in the "Grounds of Rejection to be Reviewed on Appeal" section and the "Grounds of Rejection" section of the answer, as required under M.P.E.P. § 120;L03(I),

Finally, appellants argue, in the final Office Action mailed June 6, 2008, the examiner listed claims 30-32, 34-.35, 37-43, 45, 50-52, and 60-68 as rejected under 35 U.S.C, §103(a) as unpatentable over Rozzi et al. in view of Majeti et al. The Examiner's Answer included claims 69-80 in this rejection. As such, Appellants are interpreting the inclusion of each of claims 69-80 as a New Ground of Rejection. However, as noted above, there is no indication in the Examiner's Answer that a New Ground of Rejection was (A) approved by a Technology Center (TC) Director or designee; and (13) prominently identified in the "Grounds of Rejection to be Reviewed on Appeal" section and the "Grounds of Rejection" section of the answer, as required under M.P.E_P. §1207.03(I).

Appellants' points on the above issues are well-taken. A detailed review of the rejection shows that the examiner did set forth a new reference. Consequently, appellants have not been provided a fair opportunity to carefully consider and respond to this new reference included in the Examiner's Answer. Also, the examiner's answer includes, for the first time, claim 49 in the rejection of Mitra et al. in view of Majeti et al and claims 69-80 in the rejection of Rozzi et al. in view of Majeti et al. As such, appellants have not been provided a fair opportunity to carefully consider and respond to the inclusion of these new claims in the Examiner's Answer

It is thus decided that the Examiner's Answer of March 9, 2009 indeed introduced a new ground of rejection. A new ground of rejection is permissible in an Examiner's Answer; however, an Examiner's Answer containing a new ground of rejection must adhere to the provisions set forth in the MPEP concerning the placement of such new grounds of rejection in an Examiner's Answer (MPEP § 1207.03 I-III). Specifically, the new ground of rejection set forth by the examiner in the Examiner's Answer as identified herein may be permissible according to MPEP § 1207.03; however, the Examiner's Answer must 1) be approved by a Technology Center Director or designee, 2) specifically identify the new ground of rejection as a 'new ground of rejection,' and 3) provide applicants a two-month time period to reply to the new rejection set forth in the Examiner's answer (see MPEP § 1207.03 I for guidance).

Because the examiner set forth a new ground of rejection in the Examiner's Answer and because the examiner did not properly adhere to the requirements for setting forth a new ground of rejection in the Examiner's Answer as set forth above, the Examiner's Answer was improper and is hereby VACATED.

**DECISION**

The petition is **GRANTED.**

This application will be forwarded to the examiner to either issue a corrected Examiner's Answer adhering to the provisions set forth in MPEP § 1207.03 I for introducing a new ground of rejection in an Examiner's Answer; by issuing a corrected Examiner's Answer omitting the new ground of rejection identified herein; or alternatively, to reopen prosecution to set forth said new ground of rejection.

Should there be any questions about this decision please contact Marianne C. Seidel, by letter addressed to Director, TC 1600, at the address listed above, or by telephone at 571-272-0584 or by facsimile sent to the general Office facsimile number, 703-872-9306.

Michael Wityshyn
Director, Technology Center 1600

## SPE RESPONSE FOR CERTIFICATE OF CORRECTION

**Paper No.:** _____

**DATE** : 04/20/09

**TO SPE OF** : ART UNIT 2611

**SUBJECT** : Request for Certificate of Correction for Appl. No.: 10626146 Patent No.: 7218690 B2

Please respond to this request for a certificate of correction within 7 days.

**FOR IFW FILES:**

Please review the requested changes/corrections as shown in the **COCIN** document(s) in the IFW application image. No new matter should be introduced, nor should the scope or meaning of the claims be changed.

Please complete the response (see below) and forward the completed response to scanning using document code **COCX**.

**FOR PAPER FILES:**

Please review the requested changes/corrections as shown in the attached certificate of correction. Please complete this form (see below) and forward it with the file to:

**Certificates of Correction Branch (CofC)**
**South Tower - 9A22**
**Palm Location 7580**
**You can fax the Directors/SPE response to 571-270-9990**

*LAMONTE NEWSOME*
**Certificates of Correction Branch**
**703-308-9390 ext. 112**

**Thank You For Your Assistance**

**The request for issuing the above-identified correction(s) is hereby:**
Note your decision on the appropriate box.

- ☐ **Approved** — **All** changes apply.
- ☒ **Approved in Part** — Specify below which changes **do not** apply.
- ☐ **Denied** — State the reasons for denial below.

**Comments:** The changes at column 11, line 48 appears not correct. "An Overview," ISSSTA 2000;" should be changed to "An Overview," ISSSTA 2000;"

[signature] 2011

SPE RESPONSE FOR CERTIFICATE OF CORRECTION

SPE

Art Unit

UNITED STATES PATENT AND TRADEMARK OFFICE

Commissioner for Patents
United States Patent and Trademark Office
P.O. Box 1450
Alexandria, VA 22313-1450
www.uspto.gov

COUDERT BROTHERS LLP
333 SOUTH HOPE STREET, 23RD FLOOR
LOS ANGELES, CA 90071

COPY MAILED

AUG 1 8 2005

OFFICE OF PETITIONS

ON PETITION

| | | |
|---|---|---|
| In re Application of | : | |
| Pasha Sadri | : | |
| Application No. 10/626,151 | : | |
| Filed: July 24, 2003 | : | |
| Attorney Docket No. 0021483-0004 | : | |

This is a decision on the petition under 37 CFR 1.137(b), filed July 1, 2005, to revive the above-identified application.

The petition is **GRANTED**.

The above-identified application became abandoned for failure to reply in a timely manner to the non-final Office action mailed September 28, 2004, which set a shortened statutory period for reply of three (3) months. No extension of time under the provisions of 37 CFR 1.136(a) were obtained. Accordingly, the above-identified application became abandoned on December 29, 2004.

The file does not indicate a change of address has been submitted, although the address given on the petition differs from the address of record. If appropriate, a change of address should be filed in accordance with MPEP 601.03. A courtesy copy of this decision is being mailed to the address given on the petition; however, the Office will mail all future correspondence solely to the address of record.

Telephone inquiries concerning this decision should be directed to Irvin Dingle at (571) 272-3210.

This matter is being referred to Technology Center AU 3625 for further processing.

Irvin Dingle
Petitions Examiner
Office of Petitions
Office of the Deputy Commissioner
for Patent Examination Policy

cc:

J.D. Harriman II
Brown Raysman Millstein Felder & Steiner LLP
1880 Century Park East, 12th Floor
Los Angeles, CA 90067-1621

UNITED STATES PATENT AND TRADEMARK OFFICE

Commissioner for Patents
United States Patent and Trademark Office
P.O. Box 1450
Alexandria, VA 22313-1450
www.uspto.gov

MAR 25 2005

RUDEN, MCCLOSKY, SMITH, SCHUSTER & RUSSELL, P.A.
222 LAKEVIEW AVE
SUITE 800
WEST PALM BEACH FL 33401-6112

| | | |
|---|---|---|
| In re Application of | : | |
| Greene, et al | : | |
| Serial No.: 10/626,161 | : | DECISION ON PETITION |
| Filed: July 24, 2003 | : | |
| For: Disposable Protective Device | : | |

This is in response to applicants' petition filed March 7, 2005, to make the above-identified application special under the provisions of 37 CFR 1.102(c), based on the age of the applicant.

Applicant has satisfied the provisions set forth in M.P.E.P. 708.02, IV. Therefore the petition is **GRANTED**.

**The application will be forwarded to the examiner for action on the merits commensurate with this decision.**

Should there be any questions with regard to this letter please contact Richard Bertsch by letter addressed to the Director, Technology Center 3700, Washington, DC 20231, or by telephone at (571) 272-4050 or by facsimile transmission at (703) 872-9306.

Richard A. Bertsch

Richard A. Bertsch, Director,
Technology Center 3700

UNITED STATES PATENT AND TRADEMARK OFFICE

Commissioner for Patents
United States Patent and Trademark Office
Washington, D.C. 20231
www.uspto.gov

RENNER OTTO BOISSELLE & SKLAR, LLP
1621 EUCLID AVENUE
NINETEENTH FLOOR
CLEVELAND OH 44115

COPY MAILED
SEP 25 2008

In re Application of :
Robert Van Der Zijpp :
Application No. 10/626,163 : ON PETITION
Filed: July 24, 2003 :
Attorney Docket No. **CULLP0179US** :

This is a decision on the petition filed July 9, 2008 and supplemented July 23, 2008 to withdraw the holding of abandonment, The petition is being treated under 37 CFR 1.181(b), in accordance with the reasoning of the decision in Delgar Inc. v. Schuyler, 172 USPQ 513.

The petition is **GRANTED**.

This application became abandoned for failure to pay the issue fee on or before June 6, 2008 as was required by the Notice of Allowance mailed March 6, 2008. This application therefore became abandoned on June 9, 2008. Accordingly, a Notice of Abandonment was mailed July 1, 2008.

The file record discloses that the Notice of Allowance was mailed to the address of record, the same address to which the Notice of Abandonment was mailed and received. However, petitioner contends that the Notice of Allowance was not received. In support, petitioner indicates that a search of the file jacket and docket records revealed that the Notice was not received and submits copies of pages from the docketing system used, wherein receipt of the Notice would have been entered, had it been received to substantiate the claim. The statement and attachments corroborate non-receipt of the Notice of Allowance.

In view of the facts set forth in the petition, it is concluded that the Notice of Allowance was never received. Accordingly, the holding of abandonment is withdrawn. No petition fee is due and none has been charged.

This application is being forwarded to the Technology Center 2628 for a remailing of the Notice of Allowance and Notice of Allowability.

Telephone inquiries concerning this matter should be directed to the undersigned Petitions Attorney at (571) 272-3212.

Patricia Faison-Ball

Patricia Faison-Ball
Senior Petitions Attorney
Office of Petitions

UNITED STATES PATENT AND TRADEMARK OFFICE

Commissioner for Patents
United States Patent and Trademark Office
P.O. Box 1450
Alexandria, VA 22313-1450
www.uspto.gov

FRIEDRICH KUEFFNER
317 MADISON AVENUE
NEW YORK NY 10017

COPY MAILED

JUN 0 8 2004

OFFICE OF PETITIONS

| | | |
|---|---|---|
| In re Application of | : | |
| Klein, et al. | : | |
| Application No. 10/626,164 | : | ON PETITION |
| Filed: July 23, 2003 | : | |
| Attorney Docket No. KN-62 | : | |

This is a decision on the "RESUBMISSION OF PATENT APPLICATION AND PETITION TO AWARD A FILING DATE OF JULY 23, 2003", filed February 17, 2004, which is being treated as a petition under 37 CFR 1.10 to accord the above-identified application a filing date of July 23, 2003.

The petition is **GRANTED.**

Petitioner argues that the above-identified application was filed on July 23, 2003, despite the fact that petitioner has not received a filing receipt or returned PTO date stamped postcard. In support thereof, petitioner has included a copy of a cover sheet itemizing the application, bearing Express Mail number EV 199311370 US.

37 CFR 1.10(e) states that any person mailing correspondence addressed to the Office with sufficient postage utilizing the "Express Mail Post Office to Addressee" service of the USPS but not received by the Office, may petition the Commissioner to consider such correspondence filed in the Office on the USPS deposit date, provided that:

(1) The petition is filed promptly after the person becomes aware that the Office has no evidence of receipt of the correspondence;

(2) The number of the "Express Mail" mailing label was placed on the paper(s) or fee(s) that constitute the correspondence prior to the original mailing by "Express Mail";

(3) The petition includes a copy of the originally deposited paper(s) or fee(s) that constitute the correspondence showing the number of the "Express Mail" mailing label thereon, a copy of any returned postcard receipt, a copy of the "Express Mail" mailing label showing the "date-in," a copy of any other official notation by the USPS relied upon to show the date of deposit, and, if the requested filing date is a date other than the "date-in" on the "Express Mail" mailing label or other official notation entered by the USPS, a showing pursuant to paragraph (d)(3) of this section that the requested filing date was the date the correspondence was deposited in the "Express Mail Post Office to Addressee" service prior to the last scheduled pickup for that day; and

(4) The petition includes a statement which establishes, to the satisfaction of the Commissioner, the original deposit of the correspondence and that the copies of the correspondence, the copy of the "Express Mail" mailing label, the copy of any returned postcard receipt, and any official notation entered by the USPS are true copies of the originally mailed correspondence, original "Express Mail" mailing label, returned postcard receipt, and official notation entered by the USPS.

Here, the petition was filed promptly. Petitioner included a copy of the Express Mail mailing label, as well a copy of the application with the number of the Express Mail mailing label thereon. Petitioner also included a satisfactory statement regarding the deposit of the correspondence.

In view of the above, the application is entitled to a filing date of July 23, 2003.

Given the basis for granting this petition, the petition fee will be refunded to petitioner under separate cover.

Application No. 10/626,164

The application file is being forwarded to the Office of Initial Patent Examination for further processing with a filing date of **July 23, 2003.**

Telephone inquiries concerning this decision should be directed to the undersigned at (703) 305-0272.

Cliff Congo
Petitions Attorney
Office of Petitions

UNITED STATES PATENT AND TRADEMARK OFFICE

Commissioner for Patents
United States Patent and Trademark Office
P.O. Box 1450
Alexandria, VA 22313-1450
www.uspto.gov
OIW 08-04

FRIEDRICH KUFFNER, P.C.
317 MADISON AVENUE, SUITE 910
NEW YORK NY 10017

COPY MAILED

JUN 17 2004

OFFICE OF PETITIONS

| | | |
|---|---|---|
| In re Application of | : | |
| Wittwer et al. | : | |
| Application No. 10/626,169 | : | DECISION ON |
| Filed: 17 February, 2004 | : | PETITION |
| Atty Docket No. BM-134 | : | |

This is a decision in reference to the petition filed on 17 February, 2004, which is treated as a petition under 37 CFR 1.53(e) requesting that the above identified application be accorded a filing date of 23 July, 2003.

The petition is **dismissed**.

Petitioner asserts that three (3) applications, assigned attorney docket Numbers PR-47, KN-62, and BM-134, respectively, were filed in the same Express Mail envelope on 23 July, 2003. The filing fee, state petitioners, was submitted for two of the applications, PR-47 and KN-62. Petitioners have included copies of these checks with the present petition. Petitioners assert that a return receipt postcard was only received for one of the applications, however, Attorney Docket No. PR-47, was assigned Application No. 10/626,328. Petitioners assert that no filing receipt or return receipt postcard was received for the other two applications.

The application papers petitioners assigned Attorney Docket Number KN-62 have now been located in the Office, and have been assigned Application Number 10/626,167. A Filing Receipt will be mailed to applicants in due course.

However, after a search of Office PALM records, the application assigned Attorney Docket Number BM-134, For: LOCKING SYSTEM FOR MOTOR VEHICLES, cannot be located in the Office.

Petitioners' evidence that the application assigned Attorney Docket Number BM-134 was filed in the USPTO on 23 July, 2003, has been considered, but is not persuasive. No specification or drawings for this application were filed on 23 July, 2003, since no such pages and drawing figures are present among the

application papers received on that date. An applicant alleging that a paper was filed in the Office and later misplaced has the burden of proving the allegation by a preponderance of the evidence. The fact that petitioner believes the application was among the papers he filed on 23 July, 2003, is not more persuasive than the actual papers shown to have been received by the official file.

Furthermore, neither petitioners' Express Mail customer receipt nor the Express Mail log book are persuasive evidence that the above-identified application was filed on 23 July, 2003, because two of the three applications asserted to have been filed in that Express Mail envelope were in fact received and assigned application numbers. Where there is a dispute as to the contents of correspondence submitted to the Office, an applicant may not rely upon the provisions of 37 CFR 1.10(e) to establish what documents and or fees were filed in the Office.[1] A petition under 37 CFR 1.10(e) is only appropriate where the correspondence was sent by Express Mail but nothing was received by the Office. Rather, the Express Mail log and application transmittal sheet evidences, at best, petitioners' intent to file the above-identified application on 23 July, 2003. Petitioners simply have no persuasive evidence that the specification, including at least one claim, and drawings assigned Attorney Docket No. BM-134 were among the application papers received in the USPTO on 23 July, 2003.

The application will be processed with a filing date of 17 February, 2004, using the specification, including the claims, and 11 sheets of drawings filed on that date.

Since this petition was not due to an error on the part of the USPTO, the petition fee will not be refunded.

Further correspondence with respect to this matter should be addressed as follows:

By mail: Mail Stop Petition
Commissioner for Patents
P.O. Box 1450
Alexandria, VA 22313-1450

By FAX: (703) 872-9306
Attn: Office of Petitions

---

[1] MPEP 513

By hand: U.S. Patent and Trademark Office
220 20th Street S.
Customer Window, Mail Stop Petition
Crystal Plaza 2, Lobby, Room 1B03
Arlington, VA 22202

The application is being forwarded to the Office of Initial Patent Examination for further processing with a filing date of 17 February, 2004, using the application papers filed on that date.

Telephone inquiries specific to this matter should be directed to the undersigned at (703) 308-6918.

D Wood

Douglas I. Wood
Senior Petitions Attorney
Office of Petitions

UNITED STATES PATENT AND TRADEMARK OFFICE

Commissioner for Patents
United States Patent and Trademark Office
P.O. Box 1450
Alexandria, VA 22313-1450
www.uspto.gov
DIW 09-04

PENDORF & CUTLIFF
5111 MEMORIAL HIGHWAY
TAMPA FL 33634

COPY MAILED

SEP 17 2004

OFFICE OF PETITIONS

| | |
|---|---|
| In re Application of | : |
| Surburg et al. | : |
| Application No. 10/626,178 | :DECISION GRANTING PETITION |
| Filed: 24 July, 2003 | : |
| Attorney Docket No. | : |

This is a decision on the petition filed on 29 July, 2004, under 37 CFR 1.53(e)(2), requesting that the above-identified application be accorded a filing date of 24 July, 2003, with a complete specification as a part of the original disclosure of the application.

The petition is granted.

Papers purporting to be a division of parent application No. 09/988,860, were deposited on 24 July, 2003. The papers included a preliminary amendment, a declaration, and an application transmittal letter.

On 25 May, 2004, the Office of Initial Patent Examination (OIPE) mailed a "Notice of Incomplete Application" stating that the present application had not been accorded a filing date, as the papers received at the USPTO were missing a specification. The Notice indicated that the filing date would be the date of receipt of the missing items.

In response, the present petition was filed on 29 July, 2004. Petitioner asserts that a complete application was filed on 24 July, 2003. In support, petitioner has provided a copy of a postcard receipt bearing an Office-date stamp of 24 July, 2003, and the above-identified application number and itemizing, *inter alia*, an application for patent as well as a preliminary amendment and a declaration.

In view of the fact that an application consists of a specification, including the claims, and drawings, if any, and that no specification received on 24 July, 2003, is located in

the official file, the evidence is persuasive that a complete application (specification including claims, and drawings, if any) was received on 24 July, 2003. Therefore, the application will be accorded a filing date of 24 July, 2003.

Nevertheless, petitioners are reminded that the identifying data on a postcard receipt should be so complete as to clearly identify the item for which receipt is requested. The postcard should identify the type of paper being filed, and the number of pages being submitted. If a new application is being filed, all parts of the application being submitted should be separately listed on the postcard (e.g. the number of pages of specification (including written description, claims and abstract) number of claims, number of sheets of drawings, number of pages of oath/declaration. The postcard receipt will not serve as *prima facie* evidence of receipt of any item which is not adequately itemized on the postcard.[1]

In addition to a properly itemized postcard, petitioners may avoid in the future the predicament which has occurred by including, in the application-as-filed, a statement that such specifically enumerated prior application or applications are "hereby incorporated herein by reference." The statement may appear in the specification or in the application transmittal letter. The inclusion of this incorporation by reference of the prior application(s) will permit petitioner to amendment the continuing application to include any subject matter in such prior application(s), without the need for a petition.[2]

The petition fee of $130.00 will be credited to counsel's deposit account, No. 16-0877.

The application will be processed and examined using the copy of the specification supplied with the present petition.

The application is being forwarded to Office of Initial Patent Examination for processing with a filing date of 24 July, 2003, using the specification, including the claims, supplied with the petition.

---

[1] MPEP 503.

[2] MPEP 201.06(c).

Telephone inquiries specific to this matter should be directed to the undersigned at (703) 308-6918.

Douglas I. Wood
Senior Petitions Attorney
Office of Petitions

UNITED STATES PATENT AND TRADEMARK OFFICE

Commissioner for Patents
United States Patent and Trademark Office
P.O. Box 1450
Alexandria, VA 22313-1450
www.uspto.gov

IRELL & MANELLA LLP
840 NEWPORT CENTER DRIVE
SUITE 400
NEWPORT BEACH, CA 92660

COPY MAILED

AUG 14 2006

OFFICE OF PETITIONS

In re Application of :
Damon D. Brink et al. :
Application No. 10/626,197 :
Filed: July 22, 2003 :
Attorney Docket No.: 157972-0004 :

ON PETITION

This is a decision on the petition filed June 15, 2006 under 37 CFR 1.137(b),[1] to revive the above-identified application.

The petition is **GRANTED**.

This application became abandoned for failure to timely reply to the non-Final Office Action mailed November 1, 2005. A shortened statutory period of three months was set for replying to the non-Final Office Action. No extensions of time having been requested, this application became abandoned February 2, 2006. Accordingly, a Notice of Abandonment was mailed May 2, 2006.

This matter is being referred to Technology Center 2627 for appropriate action on the amendment filed June 15, 2006.

Telephone inquiries concerning this matter should be directed to the undersigned Petitions Attorney at (571) 272-3212.

Patricia Faison-Ball
Senior Petitions Attorney
Office of Petitions

---

[1]Effective December 1, 1997, the provisions of 37 CFR 1.137(b) now provide that where the delay in reply was unintentional, a petition may be filed to revive an abandoned application or a lapsed patent pursuant to 37 CFR 1.137(b). A grantable petition filed under the provisions of 37 CFR 1.137(b) must be accompanied by:

(1) the required reply, unless previously filed. In a nonprovisional application abandoned for failure to prosecute, the required reply may be met by the filing of a continuing application. In a nonprovisional application filed on or after June 8, 1995, and abandoned for failure to prosecute, the required reply may also be met by the filing of a request for continued examination in compliance with § 1.114. In an application or patent, abandoned or lapsed for failure to pay the issue fee or any portion thereof, the required reply must be the payment of the issue fee or any outstanding balance thereof. In an application abandoned for failure to pay the publication fee, the required reply must include payment of the publication fee.

(2) the petition fee as set forth in 37 CFR 1.17(m);

(3) a statement that the entire delay in filing the required reply from the due date for the reply until the filing of a grantable petition pursuant to 37 CFR 1.137(b) was unintentional. The Commissioner may required additional information where there is a question whether the delay was unintentional; and

(4) any terminal disclaimer (and fee as set forth in 37 CFR 1.20(d)) required pursuant to 37 CFR 1.137(c)).

UNITED STATES PATENT AND TRADEMARK OFFICE

Commissioner for Patents
United States Patent and Trademark Office
P.O. Box 1450
Alexandria, VA 22313-1450
www.uspto.gov

**KEVIN J. MORIARTY**
**PATENT DEPARTMENT**
**DEERE & COMPANY**
**ONE JOHN DEERE PLACE**
**MOLINE, IL 61265-8098**

**COPY MAILED**

JUL 12 2005

**OFFICE OF PETITIONS**

| | | |
|---|---|---|
| In re Application of | : | |
| Ryan Patrick Mackin et al | : | |
| Application No. 10/626,220 | : | ON PETITION |
| Filed: July 24, 2003 | : | |
| Attorney Docket No. 16450-US | : | |

This is a decision on the petition under 37 CFR 1.137(b), filed June 23, 2005, to revive the above-identified application.

The petition is **GRANTED**.

The above-identified application became abandoned for failure to reply in a timely manner to the non-final Office action mailed September 21, 2004, which set a shortened statutory period for reply of three (3) months. No extensions of time under the provisions of 37 CFR 1.136(a) were obtained. Accordingly, the above-identified application became abandoned on December 22, 2004.

Telephone inquiries concerning this decision should be directed to Wan Laymon at (571) 272-3220.

This matter is being referred to Technology Center AU 3671.

Wan Laymon
Wan Laymon
Petitions Examiner
Office of Petitions
Office of the Deputy Commissioner
for Patent Examination Policy

UNITED STATES PATENT AND TRADEMARK OFFICE

Commissioner for Patents
United States Patent and Trademark Office
P.O. Box 1450
Alexandria, VA 22313-1450
www.uspto.gov

MYERS BIGEL SIBLEY & SAJOVEC, P.A
PO BOX 37428
RALEIGH NC 27627

**COPY MAILED**

OCT 1 4 2008

**OFFICE OF PETITIONS**

In re Application of:
CAMP, William O.
Application No.: 10/626,224
Filed: July 24, 2003
Attorney Docket No.: 9314-45

DECISION APPROVING
WITHDRAWAL OF ATTORNEY

This is a decision on the Request to Withdraw as Attorney/Agent of Record under 37 CFR § 1.36, filed October 2, 2008.

The Request is **APPROVED**.

Debra K. Stephens requests that she alone be withdrawn as an attorney under 37 CFR § 1.36, pursuant to the reason set forth under 37 CFR § 10.40(b)(2), because of her current employment by the United States Patent and Trademark Office. Since the Request satisfies all of the requirements for withdrawal, it is appropriate to approve the Request and withdraw only Ms. Stephens as an attorney of record.

All future communications from the Office will continue to be directed to the above-identified correspondence address.

A courtesy copy of this decision is being mailed to Ms. Stephens at the address identified in the Request.

Telephone inquiries relating to this decision should be directed Brian W. Brown at (571) 272-5338.

Brian W. Brown
Petitions Examiner
Office of Petitions

Cc: Debra K. Stephens
301 Edgemore Avenue
Cary, NC 27519

UNITED STATES PATENT AND TRADEMARK OFFICE

UNITED STATES DEPARTMENT OF COMMERCE
United States Patent and Trademark Office
Address: COMMISSIONER FOR PATENTS
P.O. Box 1450
Alexandria, Virginia 22313-1450
www.uspto.gov

MYERS BIGEL SIBLEY & SAJOVEC, P.A.
P.O. BOX 37428
RALEIGH, NC 27627

Mail Date: 04/21/2010

| | | |
|---|---|---|
| **Applicant** | : William O. Camp JR. | : DECISION ON REQUEST FOR |
| **Patent Number** | : 7653350 | : RECALCULATION of PATENT |
| **Issue Date** | : 01/26/2010 | : TERM ADJUSTMENT IN VIEW |
| **Appliction No** | : 10/626,224 | : OF WYETH AND NOTICE OF INTENT TO |
| **Filed** | : 07/24/2003 | : ISSUE CERTIFICATE OF CORRECTION |
| | | : |

The Request for Recalculation is **GRANTED** to the extent indicated.

The patent term adjustment has been determined to be **1651** days. The USPTO will *sua sponte* issue a certificate of correction reflecting the amount of PTA days determined by the recalculation.

Prior to the issuance of the certificate of correction, the USPTO will afford patentee an opportunity to be heard and request reconsideration. Accordingly, patentee has **one month or thirty (30) days**, whichever is longer, to file a request for reconsideration of this patent term adjustment calculation. See 35 U.S.C. 154(b)(3)(B)(ii) and 37 CFR 1.322(a)(4). No extensions of time will be granted under 37 CFR 1.136.

Patentee should use document code PET.OP if electronically filing a request for reconsideration of this patent term adjustment calculation. The patentee must also include the information required by 37 CFR 1.705(b)(2) and the fee required by 37 CFR 1.18(e). If patentee does not file a timely request for reconsideration of this patent term adjustment calculation including the information required by 37 CFR 1.705(b)(2) and the fee required by 37 CFR 1.18(e), the USPTO will issue a certificate of correction reflecting the PTA determination noted above.

Patentee should be aware that in order to preserve the right to review in the United States District Court for the District of Columbia of the USPTO patent term adjustment determination, patentee must ensure that he or she also take the steps required under 35 U.S.C. 154(b)(4)(A) in a timely manner. Nothing in the request for recalculation should be construed as providing an alternative time frame for commencing a civil action under 35 U.S.C. 154(b)(4)(A).

Any questions concerning this decision should be directed to the Office of Patent Legal Administration at 571-272-7702.

UNITED STATES PATENT AND TRADEMARK OFFICE

COMMISSIONER FOR PATENTS
UNITED STATES PATENT AND TRADEMARK OFFICE
P.O. BOX 1450
ALEXANDRIA, VA 22313-1450
www.uspto.gov

COPY MAILED
DEC 10 2007
OFFICE OF PETITIONS

LAHIVE & COCKFIELD, LLP
ONE POST OFFICE SQUARE
BOSTON, MA 02109-2127

In re Application of
Naoyuki Enjoji, et al.
Application No. 10/626,225
Filed: July 24, 2003
Attorney Docket No. TOW-034RCE

ON PETITION

This is a decision in response to the petition, filed August 10, 2007, to revive the above-identified application under the provisions of 37 CFR 1.137(b).

The petition is **GRANTED**.

The application became abandoned for a failure to reply in a timely manner to a non-final Office action mailed February 9, 2007. This decision precedes the mailing of a Notice of Abandonment. On August 10, 2007, the present petition was filed.

The petition satisfies the conditions for revival pursuant to the provisions of 37 CFR 1.137(b) in that petitioner has supplied (1) the reply in the form of an amendment; (2) the petition fee of $1,500; and (3) an adequate statement of unintentional delay.

The application is being referred to Technology Center AU 1795 for consideration of the amendment filed August 10, 2007.

Telephone inquiries concerning this decision should be directed to the undersigned at (571) 272-3204. Inquiries relating to further prosecution should be directed to the Technology Center.

Sherry D. Brinkley
Petitions Examiner
Office of Petitions

UNITED STATES PATENT AND TRADEMARK OFFICE

Commissioner for Patents
United States Patent and Trademark Office
P.O. Box 1450
Alexandria, VA 22313-1450
www.uspto.gov

KLARQUIST SPARKMAN LLP
121 S.W. SALMON STREET
SUITE 1600
PORTLAND, OR 97204

COPY MAILED

SEP 04 2007

OFFICE OF PETITIONS

In re Application of :
Julian Burger et al :
Application No. 10/626,251 :
Filed: July 23, 2003 :
Attorney Docket No. 3382-65690

ON PETITION

This is a decision on the petition filed August 30, 2007, under 37 CFR 1.313(c)(2) to withdraw the above-identified application from issue after payment of the issue fee.

The petition is **GRANTED**.

The above-identified application is withdrawn from issue for consideration of a submission under 37 CFR 1.114 (request for continued examination). See 37 CFR 1.313(c)(2).

**Petitioner is advised that the issue fee paid on August 1, 2007 in the above-identified application cannot be refunded. If, however, the above-identified application is again allowed, petitioner may request that it be applied towards the issue fee required by the new Notice of Allowance.**[1]

Telephone inquiries should be directed to Irvin Dingle at (571) 272-3210.

This matter is being referred to Technology Center AU 2192 for processing of the request for continued examination under 37 CFR 1.114 and for consideration of the concurrently filed Information Disclosure Statement.

Irvin Dingle
Petitions Examiner
Office of Petitions

---

[1] The request to apply the issue fee to the new Notice may be satisfied by completing and returning the new Issue Fee Transmittal Form PTOL-85(b), which includes the following language thereon: Commissioner for Patents is requested to apply the Issue Fee and Publication Fee (if any) or re-apply any previously paid issue fee to the application identified above. Petitioner is advised that, whether a fee is indicated as being due or not, the Issue Fee Transmittal Form **must** be completed and timely submitted to avoid abandonment. Note the language in bold text on the first page of the Notice of Allowance and Fee(s) Due (PTOL-85).

UNITED STATES PATENT AND TRADEMARK OFFICE

Commissioner for Patents
United States Patent and Trademark Office
P.O. Box 1450
Alexandria, VA 22313-1450
www.uspto.gov

GENERAL ELECTRIC COMPANY
GLOBAL RESEARCH
PATENT DOCKET RM. BLDG. K1-4A59
NISKAYUNA, NY 12309

**COPY MAILED**

AUG 2 5 2006

**OFFICE OF PETITIONS**

| | | |
|---|---|---|
| In re Application of | : | |
| Marc Schaepkens | : | |
| Application No. 10/626,253 | : | ON PETITION |
| Filed: July 23, 2003 | : | |
| Attorney Docket No. RD-28,667-3 | : | |

This is a decision on the petition under 37 CFR 1.137(b), filed June 30, 2006, to revive the above-identified application.

The petition is **GRANTED.**

The above-identified application became abandoned for failure to submit the Issue fee in a timely manner in reply to the Notice of Allowance mailed September 1, 2005, which set a statutory period for reply of three (3) months. Accordingly, the above-identified application became abandoned on December 2, 2005.

The petition satisfies the conditions for revival pursuant to the provisions of 37 CFR 1.137(b) in that (1) the reply in the form of payment of the issue fee; (2) the petition fee; and (3) the required statement of unintentional delay have been received. Accordingly, the issue fee is accepted as having been unintentionally delayed.

Telephone inquiries concerning this decision should be directed to the undersigned at (571) 272-3210.

This matter is being referred to the Publishing Division for further processing.

Irvin Dingle
Petitions Examiner
Office of Petitions

United States
Patent And
Trademark Office

P.O. Box 1450, Alexandria, Virginia 22313-1450 – www.uspto.gov

**PETITION DECISION**

04/12/04

Joel D. Oxman et al.
Mueting, Raasch & Gebhardt, P.A.
P.O. Box 581415
Minneapolis, MN 55458-1415

Dear Applicant:

The Box PG Pub replacement drawings for application number 10/626261 received on 03/16/04 by the U. S. Patent and Trademark Office will be included for patent publication.

Telephone inquiries should be directed to Kaletus King, Office of Pre-Grant Publication 703 605-4283.

Kaletus King

Signature of Reviewer, Office of Pre-Grant Publication

UNITED STATES PATENT AND TRADEMARK OFFICE

Commissioner for Patents
United States Patent and Trademark Office
P.O. Box 1450
Alexandria, VA 22313-1450
www.uspto.gov

**MARATHON OIL COMPANY**
**C/O LAW OFFICE OF JACK E. EBEL**
**165 SOUTH UNION BOULEVARD**
**SUITE 902**
**LAKEWOOD CO 80228**

COPY MAILED
JUL 26 2006
OFFICE OF PETITIONS

| | | |
|---|---|---|
| In re Application of | : | |
| Collins et al. | : | |
| Application No. 10/626,298 | : | ON PETITION |
| Filed: July 24, 2003 | : | |
| Attorney Docket No. 990019 D02 | : | |

This is a decision on the petition under 37 C.F.R. § 1.137(b), filed March 30, 2006, to revive the above-identified application.

The petition is **GRANTED.**

The petition satisfies the conditions for revival pursuant to the provisions of 37 CFR 1.137(b) in that (1) the reply in the form of the Issue Fee Transmittal with payment of the issue and publication fees; (2) the petition fee; and (3) the required statement of unintentional delay have been received. Accordingly, the response has been accepted as having been unintentionally delayed.

This matter is being referred to Publishing Division for processing into a patent.

Telephone inquiries regarding this decision should be directed to the undersigned at (571) 272-3282.

Liana Chase
Petitions Examiner
Office of Petitions

UNITED STATES PATENT AND TRADEMARK OFFICE

Commissioner for Patents
United States Patent and Trademark Office
P.O. Box 1450
Alexandria, VA 22313-1450
www.uspto.gov

TOWNSEND AND TOWNSEND AND CREW, LLP
TWO EMBARCADERO CENTER
EIGHTH FLOOR
SAN FRANCISCO CA 94111-3834

COPY MAILED

JUL 1 4 2004

OFFICE OF PETITIONS

In re Application of
Hutchens, et al.
Application No. 10/626,302
Filed: July 23, 2003
Attorney Docket No. 016866-002113
For: RETENTATE CHROMATOGRAPHY AND PROTEIN CHIP ARRAYS WITH APPLICATIONS IN BIOLOGY AND MEDICINE

ON PETITION

This is a decision on the petition filed June 8, 2004, requesting, in effect, withdrawal of the Notice to File Corrected Application Papers (Notice), mailed April 29, 2004, insofar as it alleges Figure 19d was not filed on July 23, 2003. The petition will be treated under 37 CFR 1.53(e).

The application was filed on July 23, 2003. On April 29, 2004, the Office of Initial Patent Examination mailed a Notice stating that the application had been accorded a filing date of July 23, 2003, requesting replacement drawings, and advising applicants that Figure 19d described in the specification appeared to have been omitted.

In response, the present petition was filed. The petition does not allege and is not accompanied by any evidence that any sheet of drawings containing the label "Fig. 19d" was present in the Office on July 23, 2003. The drawing figures present on filing contain a Figure 19 which consists of Figure 19a -c and another figure on the same sheet that is not labeled. The specification refers to "Figs. 19a-d," but no figure labeled "Fig. 19d" is present.

A sheet of drawings containing a "Fig. 19d" was not present when the application was filed. Thus, the replacement sheet of drawing submitted with the instant petition, depicting Figure 19 as broken down into Figure 19a-d will not be processed. Petitioners should file a replacement sheet of drawings for Figure 19a-c and leave what should have been labeled Fig. 19d unlabled. This would be a replacement of what was filed on July 23, 2003.

The "Notice" mailed April 29, 2004, was correct in advising applicants that a drawing of Figures 19d appeared to have been omitted. The "Notice" was properly mailed and will not be withdrawn. The petition fee is required, since the petition was not necessary to correct any USPTO error.

The petition is dismissed.

Petitioners should submit a letter to the draftsman correcting the labeling of Figure 19 prior to the first Office action.

The application is being returned the Office of Initial Patent Examination for further processing with the presently accorded filing date of July 23, 2003.

Telephone inquiries concerning this decision should be directed to the undersigned at (703) 308-6712.

E. Shirene Willis

E. Shirene Willis
Senior Petitions Attorney
Office of Petitions
Office of the Deputy Commissioner
for Patent Examination Policy

UNITED STATES PATENT AND TRADEMARK OFFICE

COMMISSIONER FOR PATENTS
UNITED STATES PATENT AND TRADEMARK OFFICE
P.O. BOX 1450
ALEXANDRIA, VA 22313-1450
www.uspto.gov

TOWNSEND AND TOWNSEND AND CREW, LLP
TWO EMBARCADERO CENTER
EIGHTH FLOOR
SAN FRANCISCO CA 94111-3834

COPY MAILED

SEP 17 2007

OFFICE OF PETITIONS

In re Patent No. 7,105,339 :
Issued: September 12, 2006 :
Application No. 10/626,303 :
Filed: July 23, 2003 :
Attorney Docket No. 026693-002340US :

NOTICE

This is a notice regarding your request for acceptance of a fee deficiency submission under 37 CFR 1.28.

The Office no longer investigates or rejects original or reissue patent under 37 CFR 1.56. **1098 Off. Gaz. Pat. Office 502 (January 3, 1989)**. Therefore, nothing in this Notice is intended to imply that an investigation was done.

Your fee deficiency submission under 37 CFR 1.28 is hereby **ACCEPTED**.

This patent is no longer entitled to small entity status. Accordingly, all future fees paid in this patent must be paid at the large entity rate.

Inquiries related to this communication should be directed to the undersigned at (571) 2723205.

Alesia M. Brown
Petitions Attorney
Office of Petitions

UNITED STATES PATENT AND TRADEMARK OFFICE

COMMISSIONER FOR PATENTS
UNITED STATES PATENT AND TRADEMARK OFFICE
P.O. BOX 1450
ALEXANDRIA, VA 22313-1450
www.uspto.gov

CORNING INCORPORATED
SP-TI-3-1
CORNING, NY 14831

**COPY MAILED**

MAR 2 4 2005

**OFFICE OF PETITIONS**

| | | |
|---|---|---|
| In re Application of | : | |
| Roger A. Allaire, et al. | : | |
| Application No. 10/626,310 | : | ON PETITION |
| Filed: July 24, 2003 | : | |
| Attorney Docket No. ADP-170(SP03-090) | : | |

This is a decision on the petition, filed March 21, 2005, under 37 CFR 1.313(c)(2) to withdraw the above-identified application from issue after payment of the issue fee.

The petition is **GRANTED**.

The above-identified application is withdrawn from issue for consideration of a submission under 37 CFR 1.114 (request for continued examination). See 37 CFR 1.313(c)(2).

***Petitioner is advised that the issue fee paid on July 23, 2004 in the above-identified application cannot be refunded. If, however, the above-identified application is again allowed, petitioner may request that it be applied towards the issue fee required by the new Notice of Allowance.*** [1]

Telephone inquiries relating to this decision should be directed to the undersigned at (571) 272-3204.

The application is being referred to Technology Center AU 3723 for further processing of the request for continued examination under 37 CFR 1.114.

Sherry D. Brinkley
Petitions Examiner
Office of Petitions
Office of the Deputy Commissioner
for Patent Examination Policy

[1]The request to apply the issue fee to the new Notice may be satisfied by completing and returning the new Issue Fee Transmittal Form PTOL-85(b), which includes the following language thereon: " Commissioner for Patents is requested to apply the Issue Fee and Publication Fee (if any) or re-apply any previously paid issue fee to the application identified above." Petitioner is advised that, whether a fee is indicated as being due or not, the Issue Fee Transmittal Form must be completed and timely submitted to avoid abandonment. Note the language in bold text on the first page of the Notice of Allowance and Fee(s) Due (PTOL-85).

UNITED STATES PATENT AND TRADEMARK OFFICE

Commissioner for Patents
United States Patent and Trademark Office
P.O. Box 1450
Alexandria, VA 22313-1450
www.uspto.gov

Date : March 24, 2005

TO : Director, Office of Patent Publication

FROM : Office of the Deputy Commissioner for Patent Examination Policy

SUBJECT : Withdrawal from Issue of

Applicant(s) : Roger A. Allaire, et al
Application No. : 10/626,310
Filed : July 24, 2003

The above-identified application has been assigned Patent No. 6,872,126 and an issue date of March 29, 2005.

It is hereby directed that this application be withdrawn from issue at the request of the applicant.

Do not refund the issue fee.

The following erratum should be published in the Official Gazette if the above-identified application is published in the OG of March 29, 2005:

> "All reference to Patent No. 6,872,126 to ROGER A. ALLAIRE, ET AL of NEW YORK for METHODS AND APPARATUS FOR EDGE FINISHING GLASS SHEETS appearing in the Official Gazette of March 29, 2005, should be deleted since no patent was granted."

Sherry D. Brinkley
Petitions Examiner
Office of Petitions
Office of the Deputy Commissioner
for Patent Examination Policy

cc: Paul Harrison, Crystal Park 3-44I (FAX-306-2737)
Deneise Boyd, Crystal Park 2, Suite 1100 (FAX-308-5413)
Mary Louise McAskill, Crystal Park 3-910 (FAX 305-4372)
Niomi Farmer, Crystal Park 3-9I0 (FAX-305-4372)
Mary E. Johnson (Cookie), P/OCS, CM1-6D07
Duane K.Davis, P/OCS, CM1-6A07
Tamara K. Greene, PK3-910

UNITED STATES PATENT AND TRADEMARK OFFICE

Commissioner for Patents
United States Patent and Trademark Office
P.O. Box 1450
Alexandria, VA 22313-1450
www.uspto.gov

MAY 20 2004

KNOBLE, YOSHIDA AND DUNLEAVY, LLC
EIGHT PENN CENTER
SUITE 1350
1628 JOHN F KENNEDY BLVD.
PHILADELPHIA, PA 19103

| | | |
|---|---|---|
| In re Application of | : | |
| Christine Buckley | : | |
| Serial No.: 10/626,311 | : | DECISION ON PETITION |
| Filed: July 24, 2003 | : | |
| For: Exercise Rug With Contours | : | |

This is in response to the petition applicant filed on February 17, 2004 to make the above-identified application special under the provisions of 37 CFR 1.102(d).

Applicant has satisfied the provisions set forth in M.P.E.P. 708.02, VIII, thus the petition is **GRANTED**.

The application will be forwarded to the examiner for action on the merits commensurate with this decision.

Should there be any questions with regard to this letter please contact John Kittle by letter addressed to the Director, Technology Center 3700/2900, P.O. Box 1450 Alexandria, VA 22313-1450, or by telephone at (703) 308-0873 or by facsimile transmission at (703) 308-3139.

John E. Kittle

John E. Kittle
Director
Technology Center 3700/2900

UNITED STATES PATENT AND TRADEMARK OFFICE

Commissioner for Patents
United States Patent and Trademark Office
P.O. Box 1450
Alexandria, VA 22313-1450
www.uspto.gov

Lawrence L. Martin
Aventis Pharmaceuticals Inc.
Patent Department
Route #202-206 / P.O. Box 6800
Bridgewater, NJ 08807-0800

COPY MAILED
OCT 17 2006
OFFICE OF PETITIONS

| | | |
|---|---|---|
| In re Application of | : | |
| Schwink et al. | : | |
| Application No. 10/626,314 | : | ON PETITION |
| Filing Date: 07/24/2003 | : | |
| Attorney Docket Number: | : | |
| DEAV2002/0052US NP | : | |

This is a decision on the Petition for Revival of an Application for Patent Abandoned Unintentionally Under 37 C.F.R. § 1.137(b), filed July 11, 2006.

This Petition is hereby **granted**.

The above-identified application became abandoned for failure to timely and properly reply to the Notice of Allowance and Issue Fee Due, mailed March 29, 2006. The Notice set a non-extendable three (3) month period for reply. No reply having been received, the application became abandoned on June 30, 2006. A Notice of Abandonment was mailed August 4, 2006.

Applicant's deposit account has been charge the fees authorized in the PTOL-85B filed with the instant petition. Accordingly, the petition is granted.

This application is being referred to Publishing Division for processing into a patent.

Telephone inquiries concerning this decision should be directed to the undersigned at (571) 272-3232.

Derek L. Woods
Attorney
Office of Petitions

UNITED STATES PATENT AND TRADEMARK OFFICE

Commissioner for Patents
United States Patent and Trademark Office
P.O. Box 1450
Alexandria, VA 22313-1450
www.uspto.gov

THE WEBB LAW FIRM, P.C.
700 KOPPERS BUILDING
436 SEVENTH AVENUE
PITTSBURGH, PA 15219

**COPY MAILED**

OCT 30 2008

**OFFICE OF PETITIONS**

In re Application of
SALINAS, et al.
Application No. 10/626,316
Filed: July 24, 2003
Attorney Docket No. 4369-031374

DECISION ON PETITION
UNDER 37 CFR 1.137(b)

This is a decision on the petition under the unintentional provisions of 37 CFR 1.137(b), filed July 19, 2007, to revive the above-identified application.

The petition is GRANTED.

The application became abandoned for failure to timely file a reply within the meaning of 37 CFR 1.113 to the final Office action of November 30, 2006. The proposed reply required for consideration of a petition to revive must be a Notice of Appeal (and appeal fee required by 37 CFR 41.20(b)(2), an amendment that *prima facie* places the application in condition for allowance, a Request for Continued Examination and submission (37 CFR 1.114), or the filing of a continuing application under 37 CFR 1.53(b). See MPEP 711.03(c)(II)(A)(2). Accordingly, the date of abandonment of this application is March 1, 2007.

37 CFR 1.137(b)(3) requires a statement that "the entire delay in filing the required reply from the due date for the reply until the filing of a grantable petition pursuant to 37 CFR 1.137(b) was unintentional." Since the statement appearing in the petition varies from the language required by 37 CFR 1.137(b)(3), the statement is being construed as the required statement. Petitioner must notify the Office if this is not a correct reading of the statement appearing in the petition.

The petition satisfies the requirements of 37 CFR 1.137(b) in that petitioner has supplied (1) the reply in the form of a Request for Continued Examination (RCE) and fee of $395, and the submission required by 37 CFR 1.114; (2) the petition fee of $750; and (3) an adequate statement of unintentional delay.

Telephone inquiries concerning this decision should be directed to Monica A. Graves at (571) 272-7253.

This application is being referred to Technology Center AU 1651 for processing of the RCE and for appropriate action by the Examiner in the normal course of business on the amendment submitted in accordance with 37 CFR 1.114.

Brian W. Brown
Petitions Examiner
Office of Petitions

UNITED STATES PATENT AND TRADEMARK OFFICE

Commissioner for Patents
United States Patent and Trademark Office
P.O. Box 1450
Alexandria, VA 22313-1450
www.uspto.gov

**SEANN P. LAHEY**
**MCNAIR LAW FIRM, P.A.**
**P.O. BOX 10827**
**GREENVILLE, SC 29603-0827**

COPY MAILED

MAY 2 6 2005

OFFICE OF PETITIONS

| | | |
|---|---|---|
| In re Application of | : | |
| Kasten, Robert | : | |
| Application No. 10/626,334 | : | ON PETITION |
| Filed: July 24, 2003 | : | |
| Attorney Docket No. Kasten 032690.02 | : | |

This is a decision on the petition under 37 C.F.R. § 1.137(b), filed May 4, 2005, to revive the above-identified application.

The petition is **GRANTED.**

The above-identified application became abandoned for failure to submit the issue fee and publication fee in a timely manner in reply to the Notice of Allowance mailed October 5, 2004, which set a statutory period for reply of three (3) months. Accordingly, the above-identified application became abandoned on January 6, 2005.

Petitioner has met the requirements to revive the above-identified application pursuant to 37 CFR 1.137(b).

This matter is being referred to the Publishing Division for processing into a patent.

Telephone inquiries regarding this decision should be directed to the undersigned at (571) 272-3282.

Liana Chase
Petitions Examiner
Office of Petitions
Office of the Deputy Commissioner
for Patent Examination Policy

UNITED STATES PATENT AND TRADEMARK OFFICE

Commissioner for Patents
United States Patent and Trademark Office
P.O. Box 1450
Alexandria, VA 22313-1450
www.uspto.gov

COPY MAILED

JUN 27 2006

OFFICE OF PETITIONS

JASPAN SCHLESINGER HOFFMAN LLP
300 GARDEN CITY PLAZA
GARDEN CITY NY 11530

| | |
|---|---|
| In re Application of | : |
| Eileen Breslin | : |
| Application No. 10/626,347 | : DECISION GRANTING PETITION |
| Filed: July 24, 2003 | : UNDER 37 CFR 1.137(b) |
| Attorney Docket No. 39830 | : |

This is a decision on the petition under 37 CFR 1.137(b), filed February 6, 2006, to revive the above-identified application.

The petition is **GRANTED**.

The petition satisfies the conditions for revival pursuant to the provisions of 37 CFR 1.137(b) in that (1) the reply in the form of an RCE and an amendment; (2) the petition fee; and (3) the required statement of unintentional delay have been received. Accordingly, the reply to the final rejection of June 20, 2005, is accepted as having been unintentionally delayed.

Telephone inquiries concerning this decision should be directed to the undersigned at (571) 272-3208.

This matter is being referred to Technology Center AU 2872.

Karen Creasy

Karen Creasy
Petitions Examiner
Office of Petitions

UNITED STATES PATENT AND TRADEMARK OFFICE

Commissioner for Patents
United States Patent and Trademark Office
P.O. Box 1450
Alexandria, VA 22313-1450
www.uspto.gov

HEAD JOHNSON & KACHIGIAN
228 W 17TH PLACE
TULSA, OK 74119

**COPY MAILED**

JUL 03 2008

**OFFICE OF PETITIONS**

In re Application of :
Dennis Lewis :
Application No. 10/626,350 :
Filed: July 24, 2003 :
Attorney Docket No. BAI525/03273 :

ON PETITION

This is a decision on the petition under the unintentional provisions of 37 CFR 1.137(b), filed March 25, 2008, to revive the above-identified application.

The petition is **GRANTED**.

The application became abandoned for failure to timely file a reply within the meaning of 37 CFR 1.113 to the final Office action of June 13, 2007. The proposed reply required for consideration of a petition to revive must be a Notice of Appeal (and appeal fee required by 37 CFR 41.20(b)(2), an amendment that *prima facie* places the application in condition for allowance, a Request for Continued Examination and submission (37 CFR 1.114), or the filing of a continuing application under 37 CFR 1.53(b). See MPEP 711.03(c)(III)(A)(2). A three-month extension of time pursuant to the provisions of 37 CFR 1.136(a) was previously obtained on December 12, 2007. Accordingly, the date of abandonment of this application is December 13, 2007.

An extension of time under 37 CFR 1.136 must be filed prior to the expiration of the maximum extendable period for reply. See In re Application of S., 8 USPQ2d 1630, 1631 (Comm'r Pats. 1988). Accordingly, since the $525 extension of time submitted with the petition on March 25, 2008 was subsequent to the maximum extendable period for reply, this fee is unnecessary and will be credit to petitioner's deposit account.

The petition satisfies the requirements of 37 CFR 1.137(b) in that petitioner has supplied (1) the reply in the form of a Request for Continued Examination (RCE) and fee of $405 and the submission required by 37 CFR 1.114; (2) the petition fee of $770; and (3) a proper statement of unintentional delay.

Telephone inquiries concerning this decision should be directed to the undersigned at (571) 272-3210.

This application is being referred to Technology Center AU 3749 for processing of the RCE and for appropriate action by the Examiner in the normal course of business on the amendment submitted in accordance with 37 CFR 1.114.

Irvin Dingle
Petition Examiner
Office of Petitions

UNITED STATES PATENT AND TRADEMARK OFFICE

Commissioner for Patents
United States Patent and Trademark Office
P.O. Box 1450
Alexandria, VA 22313-1450
www.uspto.gov

DLA PIPER RUDNICK GRAY CARY US LLP
153 TOWNSEND
SUITE 800
SAN FRANCISCO, CA 94107-190

COPY MAILED

SEP 06 2006

OFFICE OF PETITIONS

| | | |
|---|---|---|
| In re Application of | : | |
| Russell | : | |
| Application No. 10/626,351 | : | DECISION ON PETITION |
| Filed: July 24, 2003 | : | TO WITHDRAW |
| Attorney Docket No. 355198-991100 | : | FROM RECORD |
| | : | |

This is a decision on the Request to Withdraw as attorney or agent of record under 37 C.F.R. § 1.36(b), filed May 25, 2006.

The request is **NOT APPROVED**.

A grantable request to withdraw as attorney/agent of record must be signed by every attorney/agent seeking to withdraw or contain a clear indication that one attorney is signing on behalf of another/others. A request to withdraw will not be approved unless at least 30 (thirty) days would remain between the date of approval and the later of the expiration date of a time to file a response or the expiration date of the maximum time period which can be extended under 37 C.F.R. § 1.136(a).

The Office cannot approve the request at this time since the reasons provided do not meet any of the conditions under the mandatory or permissive categories enumerated in 37 CFR 10.40. Section 10.40 of Title 37 of the Code of Federal Regulation states, "[a] practitioner shall not withdraw from employment in a proceeding before the Office without permission from the Office[.]" More specifically, 37 CFR 10.40 states, "[i]f paragraph (b) of this section is not applicable, a practitioner may not request permission to withdraw in matter pending before the Office unless such request or such withdrawal is" for one the permissive reasons listed in 37 CFR 10.40(c). The reasons set forth in the request, "the application is being transferred to another attorney", does not meet any the conditions set forth in 37 CFR 10.40.

All future communications from the Office will continue to be directed to the above-listed address until otherwise notified by applicant.

Telephone inquiries concerning this decision should be directed to April Wise at 571-272-1642.

April M. Wise
Petitions Examiner
Office of Petitions

cc: Jackson & Co., LLP
2410 Camino Ramon
Suite 120
San Ramon, CA 94583-4328

UNITED STATES PATENT AND TRADEMARK OFFICE

Commissioner for Patents
United States Patent and Trademark Office
P.O. Box 1450
Alexandria, VA 22313-1450
www.uspto.gov

JACKSON & CO., LLP
6114 LA SALLE AVENUE
SUITE 507
OAKLAND, CA 94611-2802

COPY MAILED

JAN 0 8 2007

OFFICE OF PETITIONS

In re Application of
Michael Russell, et al.
Application No. 10/626,351
Filed: July 24, 2003
Attorney Docket No. AL-06-03

DECISION ON PETITION
TO WITHDRAW
FROM RECORD

This is a decision on the Request to Withdraw as attorney or agent under 37 C.F.R. § 1.36(b) or 37 C.F.R. § 10.40 filed October 10, 2006.

The request is **APPROVED**.

A review of the file record indicates that Jackson & CO, LLP: (1) does not have power of attorney in this patent application; and (2) has been employed or otherwise engaged in the proceedings in this patent application. In view of the present decision, Jackson & CO, LLP has/have been withdrawn from the present application and may not prepare or submit papers under 37 C.F.R. § 1.34, or correspond in any manner in this application unless appointed in an acceptable power of attorney under 37 C.F.R. § 1.32(b).

The request to change the correspondence of record is not acceptable as the requested correspondence address is not that of: (1) the first named signing inventor; or (2) the intervening assignee of the entire interest. All future communications from the Office will be directed to the first named signing inventor under 37 C.F.R. §3.71 at the first copied address below until otherwise properly notified by the applicant.

Applicant is reminded that DLA Piper US, LLP still retains power of attorney in this application until the applicant provides a new power of attorney.

In order to request or take action in a patent matter, the assignee must establish its ownership of the patent to the satisfaction of the Director. In this regard, a Statement under 37 CFR 3.73(b) must have either: (i) documentary evidence of a chain of title from the original owner to the assignee (*e.g.*, copy of an executed assignment), and a statement affirming that the documentary evidence of the chain of title from the original owner to the assignee was or concurrently is being submitted for recordation pursuant to § 3.11; or (ii) a statement specifying where documentary evidence of a chain of title from the original owner to the assignee is recorded in the assignment records of the Office (*e.g.*, reel and frame number).

There is an outstanding Office action mailed September 6, 2006 that requires a reply from the applicant.

Telephone inquires concerning this decision should be directed to undersigned at 571-272-1642.

April M. Wise
Petitions Examiner
Office of Petitions

cc: MORGAN LEWIS & BOCKIUS, LLP
ATTN: JEFFRY S. MANN, PH.D, J.D.
ONE MARKET, SPEAR STREET TOWER
SAN FRANCISCO, CA 94105

UNITED STATES PATENT AND TRADEMARK OFFICE

NOV 22 2006

Commissioner for Patents
United States Patent and Trademark Office
P.O. Box 1450
Alexandria, VA 22313-1450
www.uspto.gov

VERTEX PHARMACEUTICALS INC.
130 WAVERLY STREET
CAMBRIDGE MA 02139-4242

| | |
|---|---|
| In re Application of | : |
| Michael Hale et al | : |
| Serial No.: 10/626,356 | : PETITION DECISION |
| Filed: July 24, 2003 | : |
| Attorney Docket No.: VPI/00-122 | : |

This is in response to the petition under 37 CFR 1.181, filed August 30, 2006, requesting withdrawal of the Final rejection.

BACKGROUND

A review of the file history shows that the examiner mailed a Non-Final Rejection to applicants on November 3, 2005, following an earlier Office action requiring restriction between the product (compound) claims and process of using claims with applicants electing the product claims for prosecution, setting forth the following items:

A. The petition for correction of the inventorship was granted.
B. The traversal of the restriction requirement was acknowledged and replied to with the requirement being maintained, but subject to rejoinder if the product claims were found allowable. Claims 23 and 27-41 were withdrawn as non-elected method of using claims.
C. Claim 1 was objected to for some typographical errors and claims 5, 9 and 13 were objected to as substantial duplicate of other claims.
D. Claims 21-22 were rejected under 35 U.S.C. 112, first paragraph, as lacking enablement in the specification with respect to the term "anti-viral agent".
E. Claim 18 was rejected under 35 U.S.C. 112, second paragraph as being indefinite as some compounds claimed were outside the scope of claim 1 from which it depended.
F..Claims 1-9 and 18-22 were rejected for obvious double patenting over SN 10/919,774 and also provisionally rejected under 35 U.S.C. 103(a) over the same application.

Applicants filed an initial response to the above Non-Final Rejection on March 29, 2006, and a compliant amended response on May 16, 2006, by amending claims 1-3, 6-7, 10-11, 18-19 and 21-22, and canceling claims 14-17, 24-26 and 42-43. Each of the rejections and objections were responded to appropriately.

The examiner mailed a Final Office action to applicants on July 25, 2006, withdrawing all of the previous objections and rejections of record. In view of the allowance of the product claims,

method claims 23 and 27-41were rejoined for prosecution. Claims 23 and 27-41 were then rejected under 35 U.S.C. 112, first paragraph, as lacking enablement with respect to treatment protocols for numerous diseases and conditions. The examiner also stated that applicant's amendments necessitated the new ground of rejection.

Applicants filed this petition on August 30, 2006, objecting to the finality of the Office action as premature.

DISCUSSION

Applicants request withdrawal of the finality of the Office action of July 25, 2006, [citing MPEP §706.07(c)] on the basis that the examiner has introduced a new ground of rejection which was not necessitated by applicants' actions or amendments..

Applicants indicate that they have spoken with the examiner and her supervisor prior to filing this petition in an effort to have the finality withdrawn or understand why finality is considered proper. Applicants were referred to M.P.E.P. 706.07(a) as stating the general policy as to when finality of an Office action is proper. It states as follows:

> Under present practice, second or any subsequent actions on the merits shall be final, except where the examiner introduces a new ground of rejection that is neither necessitated by applicant's amendment of the claims nor based on information submitted in an information disclosure statement filed during the period set forth in 37 CFR 1.97(c) with the fee set forth in 37 CFR 1.17(p).

In response applicants cite M.P.E.P. 706.07, as follows (emphasis added):

> **Before final rejection is in order a clear issue should be developed between the examiner and applicant**. To bring the prosecution to as speedy conclusion as possible and at the same time to deal justly by both the applicant and the public, the invention as disclosed and claimed should be thoroughly searched in the first action and the references fully applied; and in reply to this action the applicant should amend with a view to avoiding all the grounds of rejection and objection....
> While the rules no longer give to an applicant the right to "amend as often as the examiner presents new references or reasons for rejection," present practice does not sanction hasty and ill-considered final rejections. The applicant who is seeking to define his or her invention in claims that will give him or her the patent protection to which he or she is justly entitled **should receive the cooperation of the examiner to that end, and not be prematurely cut off in the prosecution of his or her application**....
> **The examiner should never lose sight of the fact that in every case the applicant is entitled to a full and fair hearing, and that a clear issue between applicant and examiner should be developed, if possible, before appeal**. However, it is to the interest of the applicants as a class as well as to that of the public that prosecution of an application be confined to as few actions as is consistent with a thorough consideration of its merits....
> **In making the final rejection, all outstanding grounds of rejection of record should be carefully reviewed**, and any such grounds relied on in the final rejection should be reiterated. **They must also be clearly developed to such an extent that applicant may readily judge the advisability of an appeal** unless a single previous Office action contains a complete statement supporting the rejection.
> However, where a single previous Office action contains a complete statement of a ground of rejection, the final rejection may refer to such a statement and also should include a rebuttal of any arguments raised in the applicant's reply. If appeal is taken in such a case, the examiner's answer should contain a complete statement of the examiner's position.

Applicants argue that they have not had a full or fair opportunity to address the rejection of the method claims under 35 U.S.C. 112, first paragraph, for lack of enablement, as it was not applied to the claims examined in the first Office action and rejected under 35 U.S.C. 112, first paragraph, for lack of enablement, since the reasons for lack of enablement are different. Thus a clear issue has not been developed in a manner which would properly support an Appeal to the Board of Patent Appeals and Interferences. Applicants also indicate that under Final rejection procedural options are limited to canceling the rejected claims (as suggested by the examiner, amending the claims (with no guarantee that the amendment would be entered) and filing a Notice of Appeal or filing RCE papers (or filing a Divisional application). Applicants argue that filing of RCE papers wastes both time and money in bringing the prosecution of this application to a close and filing Divisional applications would result in multiple patents and the resulting maintenance fees, etc.

M.P.E.P. 821.04 addresses situations where rejoinder of restricted inventions is appropriate, as here, and states as follows (emphasis added):

> The propriety of a restriction requirement should be reconsidered when all the claims directed to the elected invention are in condition for allowance, and the nonelected invention(s) should be considered for rejoinder. Rejoinder involves withdrawal of a restriction requirement between an allowable elected invention and a nonelected invention and examination of the formerly nonelected invention on the merits. In order to be eligible for rejoinder, a claim to a nonelected invention must depend from or otherwise require all the limitations of an allowable claim. A withdrawn claim that does not require all the limitations of an allowable claim will not be rejoined. Furthermore, where restriction was required between a product and a process of making and/or using the product, and the product invention was elected and subsequently found allowable, all claims to a nonelected process invention must depend from or otherwise require all the limitations of an allowable claim for the claims directed to that process invention to be eligible for rejoinder....
>
> Rejoined claims must be fully examined for patentability in accordance with 37 CFR 1.104. Thus, to be allowable, the rejoined claims must meet all criteria for patentability including the requirements of 35 U.S.C. 101, 102, 103 and 112....
>
> The provisions of MPEP § 706.07 govern the propriety of making an Office action final in rejoinder situations. **If rejoinder occurs after the first Office action on the merits, and if any of the rejoined claims are unpatentable,** e.g., if a rejection under 35 U.S.C. 112, first paragraph is made, **then the next Office action may be made final** where the new ground of rejection was necessitated by applicant's amendment....
>
> If restriction is required between product and process claims, for example, and all the product claims would be allowable in the first Office action on the merits, upon rejoinder of the process claims, it would not be proper to make the first Office action on the merits final if the rejoined process claim did not comply with the requirements of 35 U.S.C. 112, first paragraph. This is because the rejoinder did not occur after the first Office action on the merits.

The situation presented herein is specifically addressed in the above section of the M.P.E.P. Although none of the rejoined claims were amended and none were previously rejected under 35 U.S.C. 112, second paragraph, or over art, the making of the Office action where claims are rejoined and examined for the first time is permitted. The examiner and her Supervisor have followed the guidelines set forth in the M.P.E.P.

The actions of the examiner are determined to be proper and in accordance with permissible Office practice.

DECISION

The petition is **DENIED.**

**The application will be forwarded to the examiner for consideration of the amendment filed October 25, 2006.**

Should there be any questions about this decision please contact William R. Dixon, Jr., by letter addressed to Director, TC 1600, at the address listed above, or by telephone at 571-272-0519 or by facsimile sent to the general Office facsimile number 571-273-8300.

George C. Elliott
Director, Technology Center 1600

UNITED STATES PATENT AND TRADEMARK OFFICE

Commissioner for Patents
United States Patent and Trademark Office
P.O. Box 1450
Alexandria, VA 22313-1450
www.uspto.gov

**WINSTON & STRAWN**
**PATENT DEPARTMENT**
**1400 L STREET, N.W.**
**WASHINGTON, DC 20005-3502**

**COPY MAILED**

DEC 1 6 2005

**OFFICE OF PETITIONS**

| | |
|---|---|
| In re Application of | : |
| Pu-Sheng Cheng et al | : DECISION ON PETITIONS |
| Application No. 10/626,369 | : UNDER 37 CFR 1.78(a)(3) |
| Filed: July 23, 2003 | : |
| Attorney Docket No. 88265-10365 | : |

This is a decision on the petition under 37 CFR 1.78(a)(3), filed September 2, 2005, to accept an unintentionally delayed claim under 35 U.S.C. § 120 for the benefit of the prior-filed applications.

The petition is **DISMISSED**.

A petition for acceptance of a claim for late priority under 37 CFR 1.78(a)(3) is only applicable to those applications filed on or after November 29, 2000. Further, the petition is appropriate only after the expiration of the period specified in 37 CFR 1.78(a)(2)(ii). In addition, the petition under 37 CFR 1.78(a)(3) must be accompanied by:

**(1)** the reference required by 35 U.S.C. § 120 and 37 CFR 1.78(a)(2)(i) of the prior-filed application, unless previously submitted;
**(2)** the surcharge set forth in § 1.17(t); and
**(3)** a statement that the entire delay between the date the claim was due under 37 CFR 1.78(a)(2)(ii) and the date the claim was filed was unintentional. The Commissioner may require additional where there is a question whether the delay was unintentional.

It is unclear as to what prior-filed applications petitioner herein is seeking to claim priority. In this regard, the petition makes a reference to nonprovisional Application No. 09/453,932, filed May 16, 2000 and provisional Application No. 60/134,460 [sic, 60/134,640], filed May 17 [sic, May 18], 1999. However, the

amendment to the specification submitted with the instant petition only references PCT Application No. PCT/EP02/00770 and 09/768,784 (previously referred to as 09/768,764). If petitioner is seeking a claim for priority to Application Nos. 09/453,932 and 60/134,460 [sic, 60/134,640], an appropriate amendment should be submitted to include these applications. Petitioner is advised that the petition should be directed solely to the issues involved in this application to avoid confusion.

Accordingly, petitioner must clarify the record in a renewed petition as to what applications he is seeking to claim priority and, if appropriate, submit the appropriate amendment to the prior-filed applications.

Further correspondence with respect to this matter should be addressed as follows:

By mail: Mail Stop PETITIONS
Commissioner for Patents
Post Office Box 1450
Alexandria, VA 22313-1450

By hand: Customer Service Window
Mail Stop Petitions
Randolph Building
401 Dulany Street
Alexandria, VA 22314

By fax: (571) 273-8300
ATTN: Office of Petitions

Any questions concerning this matter may be directed to Wan Laymon at (571) 272-3220.

Frances Hicks

Frances Hicks
Lead Petitions Examiner
Office of Petitions

UNITED STATES PATENT AND TRADEMARK OFFICE

Commissioner for Patents
United States Patent and Trademark Office
P.O. Box 1450
Alexandria, VA 22313-1450
www.uspto.gov

WINSTON & STRAWN LLP
1700 K STREET, N.W.
WASHINGTON, DC 20006

COPY MAILED
JUL 26 2006
OFFICE OF PETITIONS

| | |
|---|---|
| In re Application of | : |
| Cheng et al. | : |
| Application No. 10/626,369 | : DECISION ON PETITION |
| Filed: July 23, 2003 | : UNDER 37 CFR 1.78(a)(3) AND (a)(6) |
| Attorney Docket No. 88265-10365 | : |

This is a decision on the renewed petition under 37 CFR § 1.78(a)(3), filed January 4, 2006, to accept an unintentionally delayed claim under 35 U.S.C. §§120 for the benefit of priority to the prior-filed applications set forth in the concurrently filed amendment. The petition is properly treated under 37 CFR §§ 1.78(a)(3) and 1.78(a)(6). The delay in treating this petition is regretted.

The petition is **GRANTED**.

A petition for acceptance of a claim for late priority under 37 CFR §§ 1.78(a)(3) and 1.78(a)(6) is only applicable to those applications filed on or after November 29, 2000. Further, the petition is appropriate only after the expiration of the period specified in 37 CFR §§ 1.78(a)(2)(ii) and 1.78(a)(5)(ii). In addition, the petition under 37 CFR §§ 1.78(a)(3) and 1.78(a)(6) must be accompanied by:

**(1)** the reference required by 35 U.S.C. §§ 120 and 119(e) and 37 CFR §§ 1.78(a)(2)(i) and 1.78(a)(5)(i) of the prior-filed application, unless previously submitted;
**(2)** the surcharge set forth in § 1.17(t); and
**(3)** a statement that the entire delay between the date the claim was due under 37 CFR §§ 1.78(a)(2)(ii) and 1.78(a)(5)(ii) and the date the claim was filed was unintentional. The Director may require additional where there is a question whether the delay was unintentional.

Additionally, the instant nonprovisional application must be pending at the time of filing of the reference to the prior-filed provisional application(s) as required by 37 CFR 1.78(a)(5)(ii). Further, the nonprovisional application(s) claiming the benefit of the prior-filed provisional application(s) must have been filed within twelve months of the filing date of the prior-filed provisional application(s).

All of the above requirements having been satisfied, the late claim for benefit of priority to the prior-filed applications under 35 U.S.C. §§ 120 and 119(e) is accepted as being unintentionally delayed.

***The granting of the petition to accept the delayed benefit claim to the prior-filed applications under 37 CFR §§ 1.78(a)(3) and 1.78(a)(6) should not be construed as meaning that this application is entitled to the benefit of the filing date of the prior-filed applications. In order for this application to be entitled to the benefit of the prior-filed applications, all other requirements under 35 U.S.C. §§120 and 1.78(a)(1) and (a)(2) and under 35 U.S.C. §119(e) and 37 CFR 1.78(a)(4) and (a)(5) must be met. Similarly, the fact that the corrected Filing Receipt accompanying this decision on petition includes the prior-filed applications should not be construed as meaning that applicant is entitled to the claim for benefit of priority to the prior-filed applications noted thereon. Accordingly, the examiner will, in due course, consider this benefit claim and determine whether the application is entitled to the benefit of the earlier filing date.***

A corrected Filing Receipt, which includes the priority claim to the prior-filed applications, accompanies this decision on petition.

Any questions concerning this matter may be directed to Derek L. Woods at (571) 272-3232. All other inquiries concerning either the examination procedures or status of the application should be directed to the Technology Center.

This application is being referred to Technology Center Art Unit 2878 for consideration by the examiner of the claim for benefit of priority under 35 U.S.C. § §120 and 119(e) to the prior-filed nonprovisional and provisional applications.

Frances Hicks

Frances Hicks
Lead Paralegal
Office of Petitions

**ATTACHMENT** : Corrected Filing Receipt

UNITED STATES PATENT AND TRADEMARK OFFICE

UNITED STATES DEPARTMENT OF COMMERCE
United States Patent and Trademark Office
Address: COMMISSIONER FOR PATENTS
P.O. Box 1450
Alexandria, Virginia 22313-1450
www.uspto.gov

| APPL NO. | FILING OR 371 (c) DATE | ART UNIT | FIL FEE REC'D | ATTY.DOCKET NO | DRAWINGS | TOT CLMS | IND CLMS |
|---|---|---|---|---|---|---|---|
| 10/626,369 | 07/23/2003 | 1761 | 1204 | 88265-10365 | 2 | 24 | 6 |

**CONFIRMATION NO. 1237**

**CORRECTED FILING RECEIPT**

*OC000000019636552*

28765
WINSTON & STRAWN LLP
1700 K STREET, N.W.
WASHINGTON, DC 20006

Date Mailed: 07/17/2006

Receipt is acknowledged of this regular Patent Application. It will be considered in its order and you will be notified as to the results of the examination. Be sure to provide the U.S. APPLICATION NUMBER, FILING DATE, NAME OF APPLICANT, and TITLE OF INVENTION when inquiring about this application. Fees transmitted by check or draft are subject to collection. Please verify the accuracy of the data presented on this receipt. **If an error is noted on this Filing Receipt, please mail to the Commissioner for Patents P.O. Box 1450 Alexandria Va 22313-1450. Please provide a copy of this Filing Receipt with the changes noted thereon. If you received a "Notice to File Missing Parts" for this application, please submit any corrections to this Filing Receipt with your reply to the Notice. When the USPTO processes the reply to the Notice, the USPTO will generate another Filing Receipt incorporating the requested corrections (if appropriate).**

**Applicant(s)**

Pu-Sheng Cheng, Dublin, OH;
Randall C. Chrisman, Southbury, CT;
Shannon Gavie, Altadena, CA;
Walter F. Landry, Morris, CT;
Brian J. McDonough, Escondido, CA;
Randall L. Morrison, Sylmar, CA;
Eugene Scoville, New Milford, CT;

**Power of Attorney:**

Allan Fanucci--30256

**Domestic Priority data as claimed by applicant**

This application is a CON of PCT/EP02/00770 01/22/2002
and is a CIP of 09/768,784 01/25/2001 PAT 6,756,069
which is a CIP of 09/453,932 05/16/2000 PAT 6,319,537
which claims benefit of 60/134,640 05/18/1999

**Foreign Applications**

**If Required, Foreign Filing License Granted:** 12/05/2003

**The country code and number of your priority application, to be used for filing abroad under the Paris Convention, is US10/626,369**

**Projected Publication Date:** Not Applicable

**Non-Publication Request:** No

**Early Publication Request:** No

**Title**

System and method for dispensing a liquid beverage concentrate

**Preliminary Class**

426

## PROTECTING YOUR INVENTION OUTSIDE THE UNITED STATES

Since the rights granted by a U.S. patent extend only throughout the territory of the United States and have no effect in a foreign country, an inventor who wishes patent protection in another country must apply for a patent in a specific country or in regional patent offices. Applicants may wish to consider the filing of an international application under the Patent Cooperation Treaty (PCT). An international (PCT) application generally has the same effect as a regular national patent application in each PCT-member country. The PCT process **simplifies** the filing of patent applications on the same invention in member countries, but **does not result** in a grant of "an international patent" and does not eliminate the need of applicants to file additional documents and fees in countries where patent protection is desired.

Almost every country has its own patent law, and a person desiring a patent in a particular country must make an application for patent in that country in accordance with its particular laws. Since the laws of many countries differ in various respects from the patent law of the United States, applicants are advised to seek guidance from specific foreign countries to ensure that patent rights are not lost prematurely.

Applicants also are advised that in the case of inventions made in the United States, the Director of the USPTO must issue a license before applicants can apply for a patent in a foreign country. The filing of a U.S. patent application serves as a request for a foreign filing license. The application's filing receipt contains further information and guidance as to the status of applicant's license for foreign filing.

Applicants may wish to consult the USPTO booklet, "General Information Concerning Patents" (specifically, the section entitled "Treaties and Foreign Patents") for more information on timeframes and deadlines for filing foreign patent applications. The guide is available either by contacting the USPTO Contact Center at 800-786-9199, or it can be viewed on the USPTO website at http://www.uspto.gov/web/offices/pac/doc/general/index.html.

For information on preventing theft of your intellectual property (patents, trademarks and copyrights), you may wish to consult the U.S. Government website, http://www.stopfakes.gov. Part of a Department of Commerce initiative, this website includes self-help "toolkits" giving innovators guidance on how to protect intellectual property in specific countries such as China, Korea and Mexico. For questions regarding patent enforcement issues, applicants may call the U.S. Government hotline at 1-866-999-HALT (1-866-999-4158).

---

## LICENSE FOR FOREIGN FILING UNDER
## Title 35, United States Code, Section 184
## Title 37, Code of Federal Regulations, 5.11 & 5.15

**GRANTED**

The applicant has been granted a license under 35 U.S.C. 184, if the phrase "IF REQUIRED, FOREIGN FILING LICENSE GRANTED" followed by a date appears on this form. Such licenses are issued in all applications where the conditions for issuance of a license have been met, regardless of whether or not a license may be required as

set forth in 37 CFR 5.15. The scope and limitations of this license are set forth in 37 CFR 5.15(a) unless an earlier license has been issued under 37 CFR 5.15(b). The license is subject to revocation upon written notification. The date indicated is the effective date of the license, unless an earlier license of similar scope has been granted under 37 CFR 5.13 or 5.14.

This license is to be retained by the licensee and may be used at any time on or after the effective date thereof unless it is revoked. This license is automatically transferred to any related applications(s) filed under 37 CFR 1.53(d). This license is not retroactive.

The grant of a license does not in any way lessen the responsibility of a licensee for the security of the subject matter as imposed by any Government contract or the provisions of existing laws relating to espionage and the national security or the export of technical data. Licensees should apprise themselves of current regulations especially with respect to certain countries, of other agencies, particularly the Office of Defense Trade Controls, Department of State (with respect to Arms, Munitions and Implements of War (22 CFR 121-128)); the Bureau of Industry and Security, Department of Commerce (15 CFR parts 730-774); the Office of Foreign Assets Control, Department of Treasury (31 CFR Parts 500+) and the Department of Energy.

**NOT GRANTED**

No license under 35 U.S.C. 184 has been granted at this time, if the phrase "IF REQUIRED, FOREIGN FILING LICENSE GRANTED" DOES NOT appear on this form. Applicant may still petition for a license under 37 CFR 5.12, if a license is desired before the expiration of 6 months from the filing date of the application. If 6 months has lapsed from the filing date of this application and the licensee has not received any indication of a secrecy order under 35 U.S.C. 181, the licensee may foreign file the application pursuant to 37 CFR 5.15(b).

UNITED STATES PATENT AND TRADEMARK OFFICE

Commissioner for Patents
United States Patent and Trademark Office
P.O. Box 1450
Alexandria, VA 22313-1450
www.uspto.gov

**UNITED STATES SURGICAL,**
**A DIVISION OF TYCO HEALTHCARE GROUP LP**
**150 GLOVER AVENUE**
**NORWALK CT 06856**

**COPY MAILED**

SEP 2 0 2005

**OFFICE OF PETITIONS**

In re Application of
Robert H. WHAM et al.
Application No. 10/626,390
Filed: July 24, 2003
Attorney Docket No. 2155 CIP 2A(203-3398CIP2A)

DECISION ON PETITIONS
UNDER 37 CFR 1.78(a)(3) AND (a)(6)

This is a decision on the petitions under 37 CFR 1.78(a)(3) and 1.78(a)(6), filed July 12, 2004, to accept an unintentionally delayed claim under 35 U.S.C. §§120 and 119(e) for the benefit of the prior-filed applications set forth in the concurrently filed amendment.

The petitions are **GRANTED.**

A petition for acceptance of a claim for late priority under 37 CFR 1.78(a)(3) and 1.78(a)(6) is only applicable to those applications filed on or after November 29, 2000. Further, the petition is appropriate only after the expiration of the period specified in 37 CFR 1.78(a)(2)(ii) and 1.78(a)(5)(ii). In addition, the petition under 37 CFR 1.78(a)(3) and 1.78(a)(6) must be accompanied by:

**(1)** the reference required by 35 U.S.C. §§ 120 and 119(e) and 37 CFR 1.78(a)(2)(i) and 1.78(a)(5)(i) of the prior-filed application, unless previously submitted;
**(2)** the surcharge set forth in § 1.17(t); and
**(3)** a statement that the entire delay between the date the claim was due under 37 CFR 1.78(a)(2)(ii) and 1.78(a)(5)(ii) and the date the claim was filed was unintentional. The Commissioner may require additional information where there is a question whether the delay was unintentional.

The prior formerly pending nonprovisional application No. 10/073,761 was filed during the pendency of nonprovisional application No. 09/408,944, and the prior formerly pending nonprovisional application No. 09/408,944 was filed on September 30, 1999, which is within twelve months of the filing date of the prior-filed provisional Application No. 60/105,417, which was filed on October 23, 1998, for which priority is claimed. A reference to the prior-filed

nonprovisional and provisional applications has been included in an amendment to the first sentence of the specification following the title.

The instant nonprovisional application was filed after November 29, 2000, and the claim for priority herein is submitted after expiration of the period specified in 37 CFR 1.78(a)(5)(ii). Also, the reference to the prior-filed provisional application was submitted during the pendency of the prior nonprovisional application through which benefit is sought. See 35 U.S.C. §119(e). Accordingly, having found that the instant petition satisfies the conditions of 37 CFR 1.78(a)(3) and (a)(6) for acceptance of an unintentionally delayed claim for priority under 35 U.S.C. §§ 120 and 119(e), the petition to accept an unintentionally delayed claim of benefit to prior-filed nonprovisional application No. 09/408,944 and provisional application No. 60/105,417 is granted.

***The granting of the petition to accept the delayed benefit claim to the prior-filed applications under 37 CFR 1.78(a)(3) and 1.78(a)(6) should not be construed as meaning that this application is entitled to the benefit of the filing date of the prior-filed applications. In order for this application to be entitled to the benefit of the prior-filed applications, all other requirements under 35 U.S.C. §120 and 1.78(a)(1) and (a)(2) and under 35 U.S.C. §119(e) and 37 CFR 1.78(a)(4) and (a)(5) must be met. Similarly, the fact that the corrected Filing Receipt accompanying this decision on petition includes the prior-filed applications should not be construed as meaning that applicant is entitled to the claim for benefit of priority to the prior-filed applications noted thereon. Accordingly, the examiner will, in due course, consider this benefit claim and determine whether the application is entitled to the benefit of the earlier filing date.***

A corrected Filing Receipt, which includes the priority claim to the prior-filed applications, accompanies this decision on petition.

Any questions concerning this matter may be directed to David Bucci at (571) 272-7099. All other inquiries concerning either the examination procedures or status of the application should be directed to the Technology Center.

This application is being forwarded to Technology Center Art Unit 3739 for appropriate action on the amendment submitted July 12, 2004, including consideration by the examiner of the claim under 35 U.S.C. § §120 and 119(e) of the prior-filed nonprovisional and provisional applications.

Brian Hearn
Petitions Examiner
Office of Petitions

**ATTACHMENT** : Corrected Filing Receipt

UNITED STATES PATENT AND TRADEMARK OFFICE

Commissioner for Patents
United States Patent and Trademark Office
P.O. Box 1450
Alexandria, VA 22313-1450
www.uspto.gov

MAY -6 2005

| | | |
|---|---|---|
| In re Application of | : | |
| David Glenn | : | |
| Serial No. 10/626,399 | : | DECISION ON |
| Filed: July 24, 2003 | : | PETITION TO WITHDRAW |
| For: TRAVEL CASE FOR TRANSPORTING | : | AS ATTORNEY |
| INSULIN | : | |

By papers filed on March 30, 2005, counsel has petitioned to withdraw as attorney of record in this application.

The petition is GRANTED.

Applicant is advised that the new correspondence address for this application is:

Mr. David R. Glenn
270 North 7th Street, Apt. 2A
Wheeling, IL 60090

Donna Bragaba
Office of the Director
Technology Center 3700

Timothy J. Fullin
Fullin Legal Services
711 North Milwaukee Avenue
Libertyville, IL 60048

UNITED STATES PATENT AND TRADEMARK OFFICE

Commissioner for Patents
United States Patent and Trademark Office
P.O. Box 1450
Alexandria, VA 22313-1450
www.uspto.gov

WARNER J DELAUNE JR
ADAMS AND REESE LLP
450 LAUREL STREET
SUITE 1900
BATON ROUGE LA 70801

COPY MAILED
MAY 12 2006
OFFICE OF PETITIONS

In re Application of
Samih Tarabichi
Application No. 10/626,400
Filed: July 24, 2003
Attorney Docket No. 8696-1

ON PETITION

This is a decision on the petition filed April 28, 2006 under 37 CFR 1.137(b),[1] to revive the above-identified application.

The petition under 37 CFR 1.137 (b) is **GRANTED**.

This application became abandoned August 3, 2005 for failure to timely pay the issue fee on or before August 2, 2005. Accordingly, a Notice of Abandonment was mailed January 25, 2006.

The issue fee, petition fee and publication fee have been applied. All other requirements of 37 CFR 1.137(b) having now been met, this application file is being forwarded to the Publishing Division to be processed into a patent.

Telephone inquiries concerning this matter may be directed to the undersigned Petitions Attorney at (571) 272-3212.

Patricia Faison-Ball
Senior Petitions Attorney
Office of Petitions

---

[1] Effective December 1, 1997, the provisions of 37 CFR 1.137(b) now provide that where the delay in reply was unintentional, a petition may be filed to revive an abandoned application or a lapsed patent pursuant to 37 CFR 1.137(b). A grantable petition filed under the provisions of 37 CFR 1.137(b) must be accompanied by:

(1) the required reply, unless previously filed. In a nonprovisional application abandoned for failure to prosecute, the required reply may be met by the filing of a continuing application. In a nonprovisional application filed on or after June 8, 1995, and abandoned for failure to prosecute, the required reply may also be met by the filing of a request for continued examination in compliance with § 1.114. In an application or patent, abandoned or lapsed for failure to pay the issue fee or any portion thereof, the required reply must be the payment of the issue fee or any outstanding balance thereof.

(2) the petition fee as set forth in 37 CFR 1.17(m);

(3) a statement that the entire delay in filing the required reply from the due date for the reply until the filing of a grantable petition pursuant to 37 CFR 1.137(b) was unintentional. The Commissioner may required additional information where there is a question whether the delay was unintentional; and

(4) any terminal disclaimer (and fee as set forth in 37 CFR 1.20(d)) required pursuant to 37 CFR 1.137(c)).

## SPE RESPONSE FOR CERTIFICATE OF CORRECTION

**Paper No.**:20061206

**DATE** : December 8, 2006

**TO SPE OF** : ART UNIT 2855

**SUBJECT** : Request for Certificate of Correction on Patent No.: 10/626,403

A response is requested with respect to the accompanying request for a certificate of correction.

Please complete this form and return with file, within **7** days to:
**Certificates of Correction Branch - PK 3-910**
Palm location **7590** - Tel. No. 305-8201

With respect to the change(s) requested, correcting Office and/or Applicant's errors, should the patent read as shown in the certificate of correction? No new matter should be introduced, nor should the scope or meaning of the claims be changed.

**Thank You For Your Assistance** **Certificates of Correction Branch**

**The request for issuing the above-identified correction(s) is hereby:**
Note your decision on the appropriate box.

☒ **Approved** **All** changes apply.

☐ **Approved in Part** Specify below which changes **do not** apply.

☐ **Denied** State the reasons for denial below.

**Comments:**

EDWARD LEFKOWITZ
SUPERVISORY PATENT EXAMINER
TECHNOLOGY CENTER 2800

**SPE:** Edward Lefkowitz **Art Unit** 2855

UNITED STATES PATENT AND TRADEMARK OFFICE

Commissioner for Patents
United States Patent and Trademark Office
P.O. Box 1450
Alexandria, VA 22313-1450
www.uspto.gov

JJGJR.: 08-06

Paper No: __

COPY MAILED

AUG 27 2007

OFFICE OF PETITIONS

PFIZER INC
10555 SCIENCE CENTER DRIVE
SAN DIEGO CA 92121

| | | |
|---|---|---|
| In re Application of | : | |
| Lippa, et al. | : | DECISION |
| Application No.: 10/626,406 | : | |
| Filing Date: 24 July, 2003 | : | |
| Attorney Docket No. PC25168A | : | |

This is a decision on the petition filed on 3 July, 2006, to revive the instant application as abandoned due to unintentional delay under 37 C.F.R. §1.137(b).

The Office regrets the delay in addressing this matter, however, the petition was received by the attorneys in the Office of Petitions only at this writing.[1]

For the reasons set forth below, the petition under 37 C.F.R. §1.137(b) is **GRANTED**.

## BACKGROUND

The record reflects that:

- Petitioner failed to reply to the Notice of Allowance/Allowability and Fees Due mailed on

[1] **NOTES: Monitoring of the status of applications on PAIR can inform one's management of application responses and provide an indication when mailings of Office actions should be expected. Moreover, Status Inquiries filed at three (3) or four (4) month intervals provide a demonstration of diligence and attention in supporting a petition seeking relief under 37 C.F.R. §1.181.**

27 September, 2005, with reply, due under a non-extendable deadline on or before 27 December, 2005;

- the application went abandoned by operation of law after midnight 27 December, 2005;
- the Office mailed the Notice of Abandonment on 13 June, 2006;
- on 3 July, 2006, Petitioner filed the instant petition with fee and reply in the form of payment of fees due, and made a statement of unintentional delay.

Out of an abundance of caution, Petitioners always are reminded that those registered to practice *and* all others who make representations before the Office are reminded to inquire into the underlying facts of representations made to the Office and support averments with the appropriate documentation–since all owe to the Office the continuing duty to disclose.[2]

---

[2] See supplement of 17 June, 1999. The Patent and Trademark Office is relying on petitioner's duty of candor and good faith and accepting a statement made by Petitioner. See Changes to Patent Practice and Procedure, 62 Fed. Reg. at 53160 and 53178, 1203 Off. Gaz. Pat. Office at 88 and 103 (responses to comments 64 and 109)(applicant obligated under 37 C.F.R. §10.18 to inquire into the underlying facts and circumstances when providing statements to the Patent and Trademark Office).

Specifically, the regulations at 37 C.F.R. §10.18 provide:

**§ 10.18 Signature and certificate for correspondence filed in the Patent and Trademark Office.**
(a) For all documents filed in the Office in patent, trademark, and other non-patent matters, except for correspondence that is required to be signed by the applicant or party, each piece of correspondence filed by a practitioner in the Patent and Trademark Office must bear a signature by such practitioner complying with the provisions of §1.4(d), §1.4(e), or § 2.193(c)(1) of this chapter.
(b) By presenting to the Office (whether by signing, filing, submitting, or later advocating) any paper, the party presenting such paper, whether a practitioner or non-practitioner, is certifying that—

(1) All statements made therein of the party's own knowledge are true, all statements made therein on information and belief are believed to be true, and all statements made therein are made with the knowledge that whoever, in any matter within the jurisdiction of the Patent and Trademark Office, knowingly and willfully falsifies, conceals, or covers up by any trick, scheme, or device a material fact, or makes any false, fictitious or fraudulent statements or representations, or makes or uses any false writing or document knowing the same to contain any false, fictitious or fraudulent statement or entry, shall be subject to the penalties set forth under 18 U.S.C. 1001, and that violations of this paragraph may jeopardize the validity of the application or document, or the validity or enforceability of any patent, trademark registration, or certificate resulting therefrom; and

(2) To the best of the party's knowledge, information and belief, formed after an inquiry reasonable under the circumstances, that —

(i) The paper is not being presented for any improper purpose, such as to harass someone or to cause unnecessary delay or needless increase in the cost of prosecution before the Office;

(ii) The claims and other legal contentions therein are warranted by existing law or by a nonfrivolous argument for the extension, modification, or reversal of existing law or the establishment of new law;

(iii) The allegations and other factual contentions have evidentiary support or, if specifically so identified, are likely to have evidentiary support after a reasonable opportunity for further investigation or discovery; and

(iv) The denials of factual contentions are warranted on the evidence, or if specifically so identified, are reasonably based on a lack of information or belief.

(c) Violations of paragraph (b)(1) of this section by a practitioner or non-practitioner may jeopardize the validity of the application or document, or the validity or enforceability of any patent, trademark registration, or certificate resulting therefrom. Violations of any of paragraphs (b)(2)(i) through (iv) of this section are, after notice and reasonable opportunity to respond, subject to such sanctions as deemed appropriate by the Commissioner, or the Commissioner's designee, which may include, but are not limited to, any combination of —

(1) Holding certain facts to have been established;
(2) Returning papers;
(3) Precluding a party from filing a paper, or presenting or contesting an issue;
(4) Imposing a monetary sanction;
(5) Requiring a terminal disclaimer for the period of the delay; or
(6) Terminating the proceedings in the Patent and Trademark Office.

## STATUTES, REGULATIONS AND ANALYSIS

Congress has authorized the Commissioner to "revive an application if the delay is shown to the satisfaction of the Commissioner to have been "unavoidable." 35 U.S.C. §133 (1994).[3]

The regulations at 37 C.F.R. §1.137(a) and (b) set forth the requirements for a petitioner to revive a previously unavoidably or unintentionally, respectively, abandoned application under this congressional grant of authority.

The language of 35 U.S.C. §133 and 37 C.F.R. §1.137(a) is clear, unambiguous, and without qualification: the delay in tendering the reply to the outstanding Office action, as well as filing the first petition seeking revival, must have been unavoidable for the reply now to be accepted on petition.[4]

Delays in responding properly raise the question whether delays are unavoidable.[5] Where there is a question whether the delay was unavoidable, Petitioners must meet the burden of establishing that the delay was unavoidable within the meaning of 35 U.S.C. §133 and 37 C.F.R. §1.137(a).[6] And the Petitioner must be diligent in attending to the matter.[7] Failure to do so does not constitute the care required under Pratt, and so cannot satisfy the test for diligence and due care.

(By contrast, unintentional delays are those that do not satisfy the very strict statutory and regulatory requirements of unavoidable delay, and also, by definition, are not intentional.[8]))

---

(d) Any practitioner violating the provisions of this section may also be subject to disciplinary action. See § 10.23(c)(15).
[Added 50 FR 5175, Feb. 6, 1985, effective Mar. 8, 1985; para. (a) revised, 58 FR 54494, Oct. 22, 1993, effective Nov. 22, 1993; paras. (a) & (b) revised, paras. (c) & (d) added, 62 FR 53131, Oct. 10, 1997, effective Dec. 1, 1997; para. (a) revised, 69 FR 56481, Sept. 21, 2004, effective Oct. 21, 2004]

[3] 35 U.S.C. §133 provides:
**35 U.S.C. §133 Time for prosecuting application.**
Upon failure of the applicant to prosecute the application within six months after any action therein, of which notice has been given or mailed to the applicant, or within such shorter time, not less than thirty days, as fixed by the Commissioner in such action, the application shall be regarded as abandoned by the parties thereto, unless it be shown to the satisfaction of the Commissioner that such delay was unavoidable.

[4] Therefore, by example, an unavoidable delay in the payment of the Filing Fee might occur if a reply is shipped by the US Postal Service, but due to catastrophic accident, the delivery is not made.

[5] See: *Changes to Patent Practice and Procedure*; *Final Rule Notice*, 62 *Fed. Reg.* at 53158-59 (October 10, 1997), 1203 *Off. Gaz. Pat. Office* at 86-87 (October 21, 1997).

[6] See: In re Application of G, 11 USPQ2d 1378, 1380 (Comm'r Pats. 1989).

[7] See: Diligence in Filing Petitions to Revive and Petitions to Withdraw the Holding of Abandonment, 1124 Off. Gaz. Pat. Office 33 (March 19, 1991). It was and is Petitioner's burden to exercise diligence in seeking either to have the holding of abandonment withdrawn or the application revived. See 1124 Off. Gaz. Pat. Office supra.

[8] Therefore, by example, an unintentional delay in the reply might occur if the reply and transmittal form are to be prepared for shipment by the US Postal Service, but other pressing matters distract one's attention and the mail is not timely deposited for shipment.

As to the Allegations
of Unintentional Delay

The requirements for a grantable petition under 37 C.F.R. §1.137(b) are the petition and fee, a statement/showing of unintentional delay, a proper reply, and–where appropriate--a terminal disclaimer and fee.

It appears that Petitioner has satisfied the regulatory requirements.

## CONCLUSION

The petition under 37 C.F.R. §1.137(b) is **granted**.

The instant application is released to Publications Branch to be processed into patent in due course.

While telephone inquiries regarding this decision may be directed to the undersigned at (571) 272-3214, it is noted that all practice before the Office is in writing (see: 37 C.F.R. §1.2[9]) and the proper authority for action on any matter in this regard are the statutes (35 U.S.C.), regulations (37 C.F.R.) and the commentary on policy (MPEP). Therefore, no telephone discussion may be controlling or considered authority for Petitioner's action(s).

John J. Gillon, Jr.
Senior Attorney
Office of Petitions

[9] The regulations at 37 C.F.R. §1.2 provide:
**§1.2 Business to be transacted in writing.**
All business with the Patent and Trademark Office should be transacted in writing. The personal attendance of applicants or their attorneys or agents at the Patent and Trademark Office is unnecessary. The action of the Patent and Trademark Office will be based exclusively on the written record in the Office. No attention will be paid to any alleged oral promise, stipulation, or understanding in relation to which there is disagreement or doubt.

UNITED STATES PATENT AND TRADEMARK OFFICE

Commissioner for Patents
United States Patent and Trademark Office
P.O. Box 1450
Alexandria, VA 22313-1450
www.uspto.gov

WARNER J DELAUNE JR
ADAMS AND REESE LLP
450 LAUREL STREET
SUITE 1900
BATON ROUGE, LA 70801

**COPY MAILED**

JUL 0 5 2006

**OFFICE OF PETITIONS**

In re Application of Tarabichi :
Application No. 10/626,407 : Decision on Petition
Filing Date: July 24, 2003 :
Attorney Docket No. 8696-1 :

This is a decision on the petition under 37 CFR 1.181, filed May 1, 2006, to withdraw the holding of abandonment.

The petition is **granted.**

The above-identified application became abandoned for failure to reply in a timely manner to the non-final Office action mailed October 25, 2005, which set a shortened statutory period for reply of three (3) months. The above-identified application became abandoned on January 26, 2005. A Notice of Abandonment was mailed May 5, 2006.

Petitioner has established non-receipt of the Office action.

The Notice of Abandonment is hereby vacated and the holding of abandonment withdrawn.

Petitioner submitted $400 for the petition fee. A petition fee is not required for a petition to withdraw the holding of abandonment under 37 CFR 1.181. Therefore, the $400 has been credited to petitioner's deposit account.

Technology Center Art Unit 3736 will be informed of the instant decision. Thereafter, the Technology Center's technical support staff will mail a new copy of the non-final Office action. The time period for responding to the new Office action will be set to run from the mailing date of the new Office action.

Telephone inquiries regarding this communication should be directed to Petitions Attorney Steven Brantley at (571) 272-3203.

Charles Steven Brantley
Senior Petitions Attorney
Office of Petitions

UNITED STATES PATENT AND TRADEMARK OFFICE

COMMISSIONER FOR PATENTS
UNITED STATES PATENT AND TRADEMARK OFFICE
P.O. BOX 1450
ALEXANDRIA, VA 22313-1450
WWW.USPTO.GOV

Paper No. None

PHILIP S. JOHNSON
JOHNSON & JOHNSON
ONE JOHNSON & JOHNSON PLAZA
NEW BRUNSWICK NJ 08933-7003

COPY MAILED
APR 05 2004
OFFICE OF PETITIONS

In re Application of :
Andrew Joseph Friedman et al. :
Application No. 10/626,434 :
Filed: July 24, 2003 :
Attorney Docket No. PRD-0007- :
US-CIP :
Title: EXTENDED TRANSDERMAL :
CONTRACEPTIVE REGIMENS :

DECISION ON PETITION
UNDER 37 C.F.R. §1.10(D)

This is a decision on the "Request for revised filing receipt," received February 9, 2004. The submission is properly treated as a petition under 37 C.F.R. §1.10(d), requesting that the application be accorded a filing date of July 24, 2003.

Shortly after July 25, 2003, the above-identified application was received in the Office. The Office of Initial Patent Examination mailed petitioner's filing receipt, indicating that the application had been accorded a filing date of July 25, 2003.

In response, on February 9, 2004, applicants filed the present petition. Petitioners have included a copy of the Express Mail Label having a number of EV138495238US[1] and a print-out of the tracking results from the USPS's website. Applicants request that the application be accorded a filing date of July 24, 2003.

1 The Utility Patent Application Transmittal sheet has been located in the electronic file, and it is noted that it contains this same Express Mail label number.

Petitioner has alleged that the application was deposited on July 24, 2003, and the Patent Office has incorrectly assigned a filing date of July 25, 2003 to the instant application.

Regarding the Express Mail label, it is noted that the label does not contain a "date-in." A check of the Office's USPS Express Mail Finder Database computer program was inconclusive. A check of the United States Postal Service's website (http://www.usps.com/shipping/trackandconfirm.htm) was also inconclusive, in that it stated that the information pertaining to this Express Mail label number is stored off-line.

However, Petitioner has provided a print-out of the United States Postal Service's website tracking results, which establish that the package was received on July 24, 2003.

Although the application received a filing date of July 25, 2003, the evidence is convincing that the application papers were filed on July 24, 2003, and the Patent Office assigned the incorrect date to the application. Therefore, the application was entitled to a filing date of July 24, 2003.

Accordingly, the petition is **GRANTED**.

The application file is being returned to the Office of Initial Patent Examination for further processing with a filing date of July 24, 2003, **as well as the mailing of a corrected filing receipt**.

Receipt of the declaration and the surcharge associated with the late filing of an oath or declaration is acknowledged.

Any inquiries related to this decision should be directed to the undersigned at (703) 305-0011.

Paul Shanoski

Paul Shanoski
Attorney
Office of Petitions
United States Patent and Trademark Office

PTO/SB/63 (09-04)
Approved for use through 11/30/2005. OMB 0651-0035
U.S. Patent and Trademark Office, U.S. DEPARTMENT OF COMMERCE
Under the Paperwork Reduction Act of 1995, no persons are required to respond to a collection of information unless it displays a valid OMB control number.

# REQUEST FOR WITHDRAWAL AS ATTORNEY OR AGENT AND CHANGE OF CORRESPONDENCE ADDRESS

| | |
|---|---|
| Application Number | 10/628,442 |
| Filing Date | Jan. 29, 2003 |
| First Named Inventor | Frank Scazzafavo |
| Art Unit | |
| Examiner Name | Ruth Rodriquez |
| Attorney Docket Number | |

APPROVED 4/4/06

To: Commissioner for Patents
P.O. Box 1450
Alexandria, VA 22313-1450

Please withdraw me as attorney or agent for the above identified patent application, and

- [x] all the attorneys/agents of record.
- [ ] the attorneys/agents (with registration numbers) listed on the attached paper(s), or
- [ ] the attorneys/agents associated with Customer Number

NOTE: This box can only be checked when the power of attorney of record in the application is to all the practitioners associated with a customer number.

The reasons for this request are: Mr. Scazzafavo has not responded to any of my inquiries at his last know address. I have also not been able to reach him via telephone. My last contact with him was in March of 2003.

## CORRESPONDENCE ADDRESS

1. [ ] The correspondence address is NOT affected by this withdrawal.
2. [x] Change the correspondence address and direct all future correspondence to:

[ ] The address associated with Customer Number:

*OR*

| | | | | | |
|---|---|---|---|---|---|
| [x] Firm or Individual Name | CYNTHIA SMITH | | | | |
| Address | 21 EAST HURON #1905 | | | | |
| City | CHICAGO | State | IL | Zip | 60611 |
| Country | USA | | | | |
| Telephone | 773-562-5438 | | | Fax | |
| Signature | Cynthia Smith | | | | |
| Name | Cynthia Smith | | | Registration No. | 53,608 |
| Date | March 29, 2005 | | | Telephone No. | 773-562-5438 |

*NOTE: Withdrawal is effective when approved rather than when received. Unless there are at least 30 days between approval of withdrawal and the expiration date of a time period for response or possible extension period, the request to withdraw is normally disapproved.*

This collection of information is required by 37 CFR 1.36. The information is required to obtain or retain a benefit by the public which is to file (and by the USPTO to process) an application. Confidentiality is governed by 35 U.S.C. 122 and 37 CFR 1.11 and 1.14. This collection is estimated to take 12 minutes to complete, including gathering, preparing, and submitting the completed application form to the USPTO. Time will vary depending upon the individual case. Any comments on the amount of time you require to complete this form and/or suggestions for reducing this burden, should be sent to the Chief Information Officer, U.S. Patent and Trademark Office, U.S. Department of Commerce, P.O. Box 1450, Alexandria, VA 22313-1450. DO NOT SEND FEES OR COMPLETED FORMS TO THIS ADDRESS. SEND TO: Commissioner for Patents, P.O. Box 1450, Alexandria, VA 22313-1450.

*If you need assistance in completing the form, call 1-800-PTO-9199 and select option 2.*

UNITED STATES PATENT AND TRADEMARK OFFICE

UNITED STATES DEPARTMENT OF COMMERCE
United States Patent and Trademark Office
Address: COMMISSIONER FOR PATENTS
P.O. Box 1450
Alexandria, Virginia 22313-1450
www.uspto.gov

SIEMENS CORPORATION
INTELLECTUAL PROPERTY DEPARTMENT
170 WOOD AVENUE SOUTH
ISELIN, NJ 08830

Mail Date: 04/21/2010

| | | |
|---|---|---|
| **Applicant** | : Michael Hogan | : DECISION ON REQUEST FOR |
| **Patent Number** | : 7603332 | : RECALCULATION of PATENT |
| **Issue Date** | : 10/13/2009 | : TERM ADJUSTMENT IN VIEW |
| **Appliction No** | : 10/626,443 | : OF WYETH AND NOTICE OF INTENT TO |
| **Filed** | : 07/24/2003 | : ISSUE CERTIFICATE OF CORRECTION |
| | | : |

The Request for Recalculation is **GRANTED** to the extent indicated.

The patent term adjustment has been determined to be **1250** days. The USPTO will *sua sponte* issue a certificate of correction reflecting the amount of PTA days determined by the recalculation.

Prior to the issuance of the certificate of correction, the USPTO will afford patentee an opportunity to be heard and request reconsideration. Accordingly, patentee has **one month or thirty (30) days**, whichever is longer, to file a request for reconsideration of this patent term adjustment calculation. See 35 U.S.C. 154(b)(3)(B)(ii) and 37 CFR 1.322(a)(4). No extensions of time will be granted under 37 CFR 1.136.

Patentee should use document code PET.OP if electronically filing a request for reconsideration of this patent term adjustment calculation. The patentee must also include the information required by 37 CFR 1.705(b)(2) and the fee required by 37 CFR 1.18(e). If patentee does not file a timely request for reconsideration of this patent term adjustment calculation including the information required by 37 CFR 1.705(b)(2) and the fee required by 37 CFR 1.18(e), the USPTO will issue a certificate of correction reflecting the PTA determination noted above.

Patentee should be aware that in order to preserve the right to review in the United States District Court for the District of Columbia of the USPTO patent term adjustment determination, patentee must ensure that he or she also take the steps required under 35 U.S.C. 154(b)(4)(A) in a timely manner. Nothing in the request for recalculation should be construed as providing an alternative time frame for commencing a civil action under 35 U.S.C. 154(b)(4)(A).

Any questions concerning this decision should be directed to the Office of Patent Legal Administration at 571-272-7702.

UNITED STATES PATENT AND TRADEMARK OFFICE

Commissioner for Patents
United States Patent and Trademark Office
P.O. Box 1450
Alexandria, VA 22313-1450
www.uspto.gov

**MAIL**

JUN 2 0 2005

DIRECTOR OFFICE
TECHNOLOGY CENTER 2100

TOWNSEND AND TOWNSEND AND CREW, LLP
TWO EMBARCADERO CENTER
EIGHTH FLOOR
SAN FRANCISCO CA 94111-3834

In re Application of: Ido, et al.
Application No. 10/626,454
Filed: 23 July 2003
For: STORAGE SYSTEM

DECISION ON PETITION
FOR ACCELERATED
EXAMINATION UNDER
M.P.E.P.§708.02(VIII)

This is a decision on the petition filed 7 September 2004, and its duplicate copy that was resubmitted 3 February 2005, under 37 C.F.R. 102(d) and M.P.E.P. § 708.02(VIII): Accelerated Examination, to make the above-identified application special.

The Petition is **DISMISSED**.

M.P.E.P. § 708.02, Section VIII which sets out the prerequisites for a grantable petition for Accelerated Examination under 37 C.F.R. § 102(d) states in relevant part:

A new application (one which has not received any examination by the examiner) may be granted special status provided that applicant (and this term includes applicant's attorney or agent) complies with each of the following items:

(a) Submits a petition to make special accompanied by the fee set forth in 37 CFR 1.17(h);

(b) Presents all claims directed to a single invention, or if the Office determines that all the claims presented are not obviously directed to a single invention, will make an election without traverse as a prerequisite to the grant of special status;

(c) Submits a statement(s) that a pre-examination search was made, listing the field of search by class and subclass, publication, Chemical Abstracts, foreign patents, etc. The pre-examination search must be directed to the invention as claimed in the application for which special status is requested. A search made by a foreign patent office satisfies this requirement;

(d) Submits one copy each of the references deemed most closely related to the subject matter encompassed by the claims if said references are not already of record; and

(e) Submits a detailed discussion of the references, which discussion points out, with the particularity required by 37 CFR 1.111 (b) and (c), how the claimed subject matter is patentable over the references.

The petition filed 7 September 2004 fails to adequately meet requirement (e) as set forth above. Responsive to requirement (e), applicant must provide a "detailed discussion of the references, which discussion points out, with the particularity required by 37 CFR 1.111 (b) and (c), how the claimed subject matter is patentable over the references." Petitioner should ensure that the above discussion is directed to *how the language of each of the independent claims are specifically distinguishable and patentable from the references* provided pursuant to requirement (d) supra.

Applicant's petition fails to discuss the **claimed limitations** with respect to the references in accordance with the requirements of 37 CFR 1.111 (b) and (c). The petition does not point out specific limitations in each of the independent claims that may distinguish the invention over the references. Petitioner simply recites all the independent claims and then proffers one general summation of the claimed features with an averment that none of the references meet this language. This one instance of claim language precedes a list of reference-descriptions, and serves as the petition's basis for distinguishing the independent claims from the given references. This claim language, however, is not commensurate with the limitations in each of the independent claims. For example, claims 20, 23, and 26 do not contain a limitation for writing data as specified in the petition's "Discussion of the References". Petitioner should review each independent claim and identify specific limitations that may make the claim patentable over the relevant reference.

Petitioner must show, with respect to each reference, how the claimed subject matter distinguishes from the prior art in accordance with the requirements of 37 CFR 1.111 (b) and (c). As part of the required "detailed discussion" of each reference, the petition needs to particularly point out certain independent-claim limitations in relation to the given reference and specify "how the claimed subject matter is patentable over the references."

Petition to Make Special **DISMISSED**.

Petitioner is given one opportunity to perfect the petition. Any request for reconsideration must be filed within TWO MONTHS of the mail date of this decision.

Until the renewed petition is submitted, the application will be returned to the examiner's docket to await treatment on the merits in the normal order of examination.

Brian L. Johnson
Special Program Examiner
Technology Center 2100
Computer Architecture, Software and Information Security
571-272-3595

GO

UNITED STATES PATENT AND TRADEMARK OFFICE

Commissioner for Patents
United States Patent and Trademark Office
P.O. Box 1450
Alexandria, VA 22313-1450
www.uspto.gov

MAIL

SEP 0 9 2005

DIRECTOR OFFICE
TECHNOLOGY CENTER 2100

TOWNSEND AND TOWNSEND AND CREW, LLP
TWO EMBARCADERO CENTER
EIGHTH FLOOR
SAN FRANCISCO CA 94111-3834

In re Application of: Ido, et al.
Application No. 10/626,454
Filed: 23 July 2003
For: STORAGE SYSTEM

DECISION ON PETITION FOR ACCELERATED EXAMINATION UNDER M.P.E.P.§708.02(VIII)

This is a decision on the renewed petition filed 15 August 2005, on the petition to make special under 37 C.F.R. §102(d) and M.P.E.P. §708.02(VIII): Accelerated Examination, originally filed on 7 September 2004, and dismissed in the decision mailed 20 June 2005.

The Petition is **GRANTED**.

M.P.E.P. § 708.02, Section VIII which sets out the prerequisites for a grantable petition for Accelerated Examination under 37 C.F.R. § 102(d) states in relevant part:

A new application (one which has not received any examination by the examiner) may be granted special status provided that applicant (and this term includes applicant's attorney or agent) complies with each of the following items:

(a) Submits a petition to make special accompanied by the fee set forth in 37 CFR 1.17(h);

(b) Presents all claims directed to a single invention, or if the Office determines that all the claims presented are not obviously directed to a single invention, will make an election without traverse as a prerequisite to the grant of special status;

(c) Submits a statement(s) that a pre-examination search was made, listing the field of search by class and subclass, publication, Chemical Abstracts, foreign patents, etc. The pre-examination search must be directed to the invention as claimed in the application for which special status is requested. A search made by a foreign patent office satisfies this requirement;

(d) Submits one copy each of the references deemed most closely related to the subject matter encompassed by the claims if said references are not already of record; and

(e) Submits a detailed discussion of the references, which discussion points out, with the particularity required by 37 CFR 1.111 (b) and (c), how the claimed subject matter is patentable over the references.

Petition to Make Special **GRANTED** since all of the requirements for special status under MPEP § 708.02(VIII) have been met.

The application is being forwarded to the Examiner for accelerated examination in accordance with M.P.E.P. §708.02, Section VIII. If the application is subsequently allowed, it will be given priority for printing. See M.P.E.P. §1309.

Brian L. Johnson
Special Program Examiner
Technology Center 2100
Computer Architecture, Software and Information Security
571-272-3595

GO

UNITED STATES PATENT AND TRADEMARK OFFICE

COMMISSIONER FOR PATENTS
UNITED STATES PATENT AND TRADEMARK OFFICE
P.O. BOX 1450
ALEXANDRIA, VA 22313-1450
www.uspto.gov

Paper No. 9

HANA VERNY
PETERS, VERNY, JONES & SCHMITT, L.L.P.
SUITE 230
425 SHERMAN AVENUE
PALO ALTO, CA 94306

COPY MAILED

MAY 1 7 2004

OFFICE OF PETITIONS

| | | |
|---|---|---|
| In re Application of | : | |
| Mizuno, et al. | : | |
| Filed: July 22, 2003 | : | ON PETITION |
| Application No. 10/626,459 | : | |
| Attorney Docket No.: 3831.03 | : | |

This decision is in response to the "Petition Under 37 CFR 1.17(h)," filed December 29, 2003, requesting that the newly submitted Figures 13, 13B and 14A-14E be accepted as replacements for prior Figures 13, 14 and 15 A-15E.

The petition is hereby **DISMISSED**.

The above-identified application was filed July 22, 2003. The "Notice to File Corrected Application Papers ("Notice") mailed December 8, 2003 indicated, *inter alia*, that Figures 13B and 14B-E appeared to have been omitted from the application as filed.

The Notice permits applicant to either: (1) establish prior receipt in the PTO of page 7 of the specification; (2) submit the omitted page of specification and accept the date of such submission as the application filing date. An assertion that the missing page of specification was in fact deposited in the PTO with the application papers must made by way of petition (and the appropriate petition fee) with evidence of such deposit. An applicant desiring to submit the omitted item in a nonprovisional application and accept the date of such submission as the application filing date must file any omitted item with an oath or declaration in compliance with 37 CFR 1.63 and 1.64 referring to such item and a petition under 37 CFR 1.182 (with the petition fee under 37 CFR 1.17(h)) requesting the later filing date within two months of the date of the Notice (37 CFR 1.181(f)); or (3) take no action thereby constructively accepting the application filed as in the USPTO without the omitted item. Failure to take any action requires amendment of the specification to cancel reference to the omitted item.

Petitioners contend that Figures 13B and 14B-E were, in fact, filed in the PTO on July 22, 2003, but that the figures were mislabeled.

A review of the sheets of drawings filed July 22, 2003, confirms that they included one sheet labeled Fig. 13, one sheet labeled Fig. 14, and one sheet labeled Fig. 15A, Fig. 15B, Fig. 15C, Fig. 15D, and Fig. 15E. Petitioners have established that it was their intent to label the figures as Fig. 13A, Fig. 13B, 14A, 14B, 14C, 14D, and 14E respectively. Since it is obvious from the petition that no drawings were actually missing on July 22, 2003, and that applicant does not intend to file any additional sheets of drawings, the application will be processed using the 15 sheets of drawings filed on July 22, 2003.

However, the Notice was correct in advising applicant that a drawing of Figures 13B and 14B-E appeared to have been omitted. Therefore, the Notice was properly mailed and will not be withdrawn.

The petition fee will not be refunded, since the petition was not necessary to correct any PTO error.

To avoid further delay in the examination of the application, a letter to the draftsman correcting the numbering of the mislabeled drawing figures should be filed prior to the first Office action.

The application is being returned to Initial Patent Examination Division for further processing with a filing date of July 22, 2003, using the 15 sheets of drawings filed on that date.

Telephone inquiries related to this decision may be directed to the undersigned at (703) 305-0310.

Alesia M. Brown
Senior Petitions Attorney
Office of Petitions

gustment date: 05/17/2004 CKHLOK
/06/2004 LBONDIA1 00000002 10626459
FC:1051 -130.00 OP

/17/2004 CKHLOK 00000012 10626459

FC:1460 130.00 OP

UNITED STATES PATENT AND TRADEMARK OFFICE

COMMISSIONER FOR PATENTS
UNITED STATES PATENT AND TRADEMARK OFFICE
P.O. BOX 1450
ALEXANDRIA, VA 22313-1450
www.uspto.gov

BRINKS HOFER GILSON & LIONE
P.O. BOX 10395
CHICAGO IL 60610

**COPY MAILED**

AUG 15 2007

**OFFICE OF PETITIONS**

| | | |
|---|---|---|
| In re | : | |
| Application No. 10/626,462 | : | |
| Laurie Holtzberg | : | LETTER REGARDING |
| Filed: July 23, 2003 | : | PATENT TERM ADJUSTMENT |
| Attorney Docket No. 8285-636 | : | |

This is in response to the "REQUEST FOR REVIEW OF PATENT TERM ADJUSTMENT," filed July 3, 2007. Applicants disclose that the patent term adjustment pursuant to 35 U.S.C. 154(b) of 395 days indicated on the Determination of Patent Term Adjustment, PTOL-85, may extend the term of the patent by too many days.

The request for review of the patent term adjustment (PTA) is **DISMISSED** to the extent that it requests correction of the patent term adjustment.

On April 4, 2007, the Office mailed the Determination of Patent Term Adjustment under 35 U.S.C. 154(b) in the above-identified application. The Notice stated that the patent term adjustment to date is 395 days. Applicants state no basis for their assertion that the PTA may extend the term of the patent by too many days.

A review of the application history supports a conclusion that the initial Determination of Patent Term Adjustment is correct. It is noted that a terminal disclaimer was filed in this application on December 27, 2006. This has no effect on the determination of patent term adjustment set forth on any patent issuing from this application. 35 U.S.C. 154(b)(2)(B) provides that:

> No patent the term of which has been disclaimed beyond a specified date may be adjusted under this section beyond the expiration date specified in the disclaimer.

37 CFR § 1.703(g) provides that:

> No patent, the term of which has been disclaimed beyond a specified date, shall be adjusted under § 1.702 and this section beyond the expiration date specified in the disclaimer.

The provisions of § 154(b), for adjustment due to examination delay, apply to original applications, other than designs, filed on or after May 29, 2000. The Office calculates patent term adjustment for examination delay in all eligible applications. In calculating the patent term adjustment, the Office does not differentiate between applications that have terminal disclaimers and those that do not. Nor does the Office undertake the burdensome task of reviewing every application with a terminal disclaimer to determine if the patent term adjustment accorded would adjust the term beyond the expiration date specified in the disclaimer.

Rather, on issuance of the application, in compliance with 35 U.S.C. 154(b) and 37 CFR § 1.703(g), it is indicated in the patent that the patent term adjustment indicated therein is subject to any disclaimer. Moreover, it is also stated therein that the patent is subject to a terminal disclaimer.

As this letter was submitted as an attempt to advise the Office of an error in Applicants' favor, the Office will not assess the $200.00 application fee under 37 CFR 1.705(b). The Office thanks applicants for their good faith and candor in bringing this to the attention of the Office.

Telephone inquiries specific to this matter should be directed to the undersigned at (571) 272-3219.

Nancy Johnson
Senior Petitions Attorney
Office of Petitions

UNITED STATES PATENT AND TRADEMARK OFFICE

COMMISSIONER FOR PATENTS
UNITED STATES PATENT AND TRADEMARK OFFICE
P.O. BOX 1450
ALEXANDRIA, VA 22313-1450
WWW.USPTO.GOV

Paper No. None

George R. Nimmer
PO Box 252
Omaha NE 68101-0252

COPY MAILED

FEB 08 2005

OFFICE OF PETITIONS

In re Application of :
Douglas Barry et al. :
Application No. 10/626,463 : DECISION ON PETITION
Filed: July 24, 2003 :
Title: CONVEYOR TRACK DRIVE :

This is a decision on the petition filed November 15, 2004, requesting that Figures 1-5 be accorded a filing date of July 24, 2003, as part of the original disclosure.

The application was deposited on July 24, 2003. However, on September 10, 2004, the Office of Initial Patent Examination (OIPE) mailed a "Notice of Incomplete Nonprovisional Application (notice)", stating that the application had not been accorded a filing date, and advising applicants that a filing date would be accorded upon the receipt of drawings. The notice further indicated that the basic filing fee would be required, and set a two-month period for response.

In response, on November 15, 2004, applicants filed the present petition. The petition is further accompanied by the petition and filing fees, and a copy of Figures 1-5, along with a copy of applicants' postcard receipt acknowledging receipt of "Dwgs: 4 sheets" in the United States Patent and Trademark Office (Office) on July 24, 2003. Applicants request that Figures 1-5 be accorded a filing date of July 24, 2003 as part of the original disclosure.

It is noted that no drawings have been located in the electronic file.

Upon review of the record, the above-mentioned figures have not been located among the application papers. However, the evidence is convincing that the application papers deposited on July 24, 2003 included Figures 1-5, and the sheets containing these figures were subsequently misplaced in the Office.

Therefore, the application, including Figures 1-5, was complete on filing and this figure is entitled to a filing date of July 24, 2003 as part of the original disclosure.

Accordingly, the petition is **GRANTED**.

The notice mailed September 10, 2004 was sent in error, and is hereby **VACATED**. Therefore, no petition fee is necessary. A treasury check will be issued in due course.

The application file is being returned to the Office of Initial Patent Examination for further processing with a filing date of July 24, 2003, using the original application papers filed on that date, as well as the Figures 1-5 submitted on November 15, 2004 and for indication in Office records that these figures were present on filing. OIPE will then mail a corrected filing receipt.

The general phone number for the Office of Petitions which should be used for status requests is (571) 272-3282. Telephone inquiries regarding *this decision* should be directed to the undersigned at (571) 272-3225.

**Paul Shanoski**
**Senior Attorney**
**Office of Petitions**
**United States Patent and Trademark Office**

UNITED STATES PATENT AND TRADEMARK OFFICE

Commissioner for Patents
United States Patent and Trademark Office
P.O. Box 1450
Alexandria, VA 22313-1450
www.uspto.gov

GEORGE R. NIMMER
PO BOX 252
OMAHA NE 68101-0252

COPY MAILED

JUN 2 2 2004

OFFICE OF PETITIONS

In re Application of
Douglas Barry et al.
Application No. 10/626,466
Filed: July 24, 2003
Title of Invention:
SPECIMEN CARRIER TRANSFER
APPARATUS FOR A CONVEYOR TRACK

DECISION REFUSING STATUS
UNDER 37 CFR 1.47(a)

This is in response to the petition filed under 37 CFR 1.47(a) on May 7, 2004.

The petition is **DISMISSED**.

Rule 47 applicant is given TWO MONTHS from the mailing date of this decision to respond, correcting the below-noted deficiencies. Any response should be entitled "Request for Reconsideration of Petition Under 37 CFR 1.47(a). and may include an oath or declaration executed by the inventor. **Failure to respond will result in abandonment of the application**. Any extensions of time will be governed by 37 CFR 1.136(a).

The above-identified application was filed on July 24, 2003 naming Douglas Barry, Thomas L. Bybee, Adrian Chan, John Fuller, Ray Puseman, Greg Rothman, Don R. Simms, Michael Turner, Jay Woods, Inna M. Zevakina, Dave Murphy, Sheri Kime and Steve Wright as joint inventors, but without a signed declaration.

Accordingly, on December 5, 2003, a "Notice To File Missing Parts of Application" was mailed, requiring *inter alia* a properly executed oath or declaration.

In response, on October 21, 2003, the present petition was filed with a declaration signed only by joint inventors Barry, Chan, Fuller, Puseman, Rothman, Simms, Turner, Woods and Zevakina. Petitioners assert that the Declaration and Assignment were sent to joint inventors Bybee, Murphy, Kime and Wright. Evidence submitted with the petition in the form of certified mail return receipt signed by Betty Bybee for Mr. Bybee at the last known address for Mr. Bybee, and copies of the UPS tracking receipt for Mr. Murphy, Ms. Kime and Mr. Wright, bears proof that the declaration and assignment papers had been delivered to/received by the non-signing inventors.

Petitioners seek status under 37 CFR 1.47(a) claiming that thus by their actions, Mr. Bybee, Mr. Murphy, Ms. Kime and Mr. Wright refuses to cooperate with the filing of the instant application.

A grantable petition under 37 CFR 1.47(a) requires: (1) proof that the non-signing inventor cannot be reached or refuses to sign the oath or declaration after having been presented with the application papers (specification, claims and drawings); (2) an acceptable oath or declaration in compliance with 35 U.S.C. §§ 115 and 116; (3) the petition fee; and (4) a statement of the last known address of the non-signing inventor.

Applicant lacks items (1) and (2) set forth above.

In regards to item (1), petitioners have not provided sufficient proof that copies of the complete application (specification, including claims, drawings, if any, and the declaration) was sent to the non-signing inventors

The evidence submitted suggests that only the declaration and the assignment were sent to Mr. Bybee, Mr. Murphy, Ms. Kime and Mr. Wright for their signatures. The evidence presented does not bear proof that Mr. Bybee Mr. Murphy, Ms. Kime and Mr. Wright have had the opportunity to review the application.

Petitioners may show proof that a copy of the application was sent or given to the non-signing inventor for review by providing a copy of the cover letter transmitting the application papers to the non-signing inventor or details given in an affidavit or declaration of facts by a person having first hand knowledge of the details.

Likewise, before a *bona fide* refusal can be shown, the non-signing inventor must have been given an opportunity to review the application. Therefore, petitioners must show proof that the non-signing inventor refuses to sign the declaration after being sent or given a copy of the application papers. If there is a written refusal, petitioners should submit a copy of that refusal with any renewed petition. If the refusal was made orally to a person, then that person must provide details of the refusal in an affidavit or declaration of facts.

Additionally, with respect to item (2), an oath or declaration for the patent application in compliance with 37 CFR 1.63 and 1.64 has not been presented. Joint inventors Murphy, Kime and Wright have not been included on the oath or declaration presented. The oath or declaration must identify each inventor by full name, including the family name and at least one give name without abbreviation, together with any other given name or initial. The oath or declaration must also identify the country of citizenship of each inventor.

In this case, signature blanks for each of the non-signing inventors must be included and can be left blank but nonetheless, must be included.

Further correspondence with respect to this matter should be addressed as follows:

By mail: Mail Stop Petition
Commissioner for Patents
P.O. Box 1450
Alexandria, VA 22313-1450

By FAX: (703) 872-9306

Telephone inquiries concerning this matter may be directed to the undersigned Petitions Attorney at (703)305-4497.

Patricia Faison-Ball

Patricia Faison-Ball
Senior Petitions Attorney
Office of Petitions

UNITED STATES PATENT AND TRADEMARK OFFICE

Commissioner for Patents
United States Patent and Trademark Office
P.O. Box 1450
Alexandria, VA 22313-1450
www.uspto.gov

GEORGE R. NIMMER
PO BOX 252
OMAHA NE 68101-0252

COPY MAILED

AUG 1 0 2004

OFFICE OF PETITIONS

In re Application of
Douglas Barry et al.
Application No. 10/626,466
Filed: July 24, 2003
Title of Invention:
SPECIMEN CARRIER TRANSFER
APPARATUS FOR A CONVEYOR TRACK

DECISION ACCORDING STATUS
UNDER 37 CFR 1.47(a)

This is in response to the renewed petition filed under 37 CFR 1.47(a) on July 26, 2004.

The petition is **GRANTED** to the extent indicated below.

The above-identified application was filed on July 24, 2003 naming Douglas Barry, Thomas L. Bybee, Adrian Chan, John Fuller, Ray Puseman, Greg Rothman, Don R. Simms, Michael Turner, Jay Woods, Inna M. Zevakina, Dave Murphy, Sheri Kime and Steve Wright as joint inventors, but without a signed declaration.[1] A "Notice To File Missing Parts of Application" was mailed December 5, 2003, requiring *inter alia* a properly executed oath or declaration. In response, on October 21, 2003, a petition was filed with a declaration signed only by joint inventors Barry, Chan, Fuller, Puseman, Rothman, Simms, Turner, Woods and Zevakina. The petition was dismissed in a decision mailed June 22, 2004.

A grantable petition under 37 CFR 1.47(a) requires: (1) proof that the non-signing inventor cannot be reached or refuses to sign the oath or declaration after having been presented with the application papers (specification, claims and drawings); (2) an acceptable oath or declaration in compliance with 35 U.S.C. §§ 115 and 116; (3) the petition fee; and (4) a statement of the last known address of the non-signing inventor. The above-identified application and papers have been reviewed and found in compliance with 37 CFR 1.47(a). In view thereof, this application is hereby accorded Rule 1.47(a) status.

In response to the decision dismissing the petition filed May 7, 2004, proof that a complete application packet was sent to and received by Mr. Bybee has been submitted, Further, the statement made by the Attorney of Record indicates that no response to the correspondence mailed to Mr. Bybee on March 16, 2004 has been received thus, by his actions, it appears that Mr. Bybee refuses to cooperate with the filing of the above identified application.

Thus, as provided in Rule 1.47( c), this Office will forward notice of this application's filing to the non-signing inventors at the address given in the petition. Notice of the filing of this application will also be published in the Official Gazette.

This petition is only granted as it relates to joint inventor Bybee. No status under 37

[1]Petitioners claim that the application incorrectly identified Dave Murphy, Sheri Kime and Steve Wright as joint inventors. If petitioners seek to have the inventorship corrected, a petition under 37 CFR 1.48 will need to be filed with the Technology Center.

CFR 1.47 will be accorded for joint inventors Murphy, Kime and Wright. This application is being forwarded to Technology Center 3651 for examination in due process.

Telephone inquiries related to this decision should be directed to the undersigned Petitions Attorney at (703) 305-4497.

Patricia Faison-Ball

Patricia Faison-Ball
Senior Petitions Attorney
Office of Petitions

UNITED STATES PATENT AND TRADEMARK OFFICE

Commissioner for Patents
United States Patent and Trademark Office
P.O. Box 1450
Alexandria, VA 22313-1450
www.uspto.gov

THOMAS L. BYBEE
10285 GRAND AVENUE
OMAHA, NE 68134

COPY MAILED

AUG 1 0 2004

OFFICE OF PETITIONS

In re Application of
Douglas Barry et al.
Application No. 10/626,466
Filed: July 24, 2003
For: SPECIMEN CARRIER TRANSFER APPARATUS FOR A CONVEYOR TRUCK

Dear Mr. Bybee:

You are named as a joint inventor in the above identified United States patent application, filed under the provisions of 35 U.S.C. 116 (United States Code), and 37 CFR 1.47(a), Rules of Practice in Patent Cases. Should a patent be granted on the application you will be designated therein as a joint inventor.

As a named inventor you are entitled to inspect any paper in the file wrapper of the application, order copies of all or any part thereof (at a prepaid cost per 37 CFR 1.19) or make your position of record in the application. Alternatively, you may arrange to do any of the preceding through a registered patent attorney or agent presenting written authorization from you. If you care to join the application, counsel of record (see below) would presumably assist you. Joining in the application would entail the filing of an appropriate oath or declaration by you pursuant to 37 CFR 1.63.

Telephone inquiries regarding this communication should be directed to the undersigned Petitions Attorney at (703) 305-4497. Effective September 24, 2004 the contact number for the Office of Petitions will change to (571) 272-3282. Requests for information regarding your application should be directed to the File Information Unit at 703/308-2733. Information regarding how to pay for and order a copy of the application, or a specific paper in the application, should be directed to Certification Division at 703/308-9726 or 1-800-972-6382 (outside the Washington D.C. area).

Patricia Faison-Ball

Patricia Faison-Ball
Senior Petitions Attorney
Office of Petitions

cc:
GEORGE R. NIMMER
PO BOX 252
OMAHA NE 68101-0252

UNITED STATES PATENT AND TRADEMARK OFFICE

Commissioner for Patents
United States Patent and Trademark Office
P.O. Box 1450
Alexandria, VA 22313-1450
www.uspto.gov

GEORGE R NIMMER
PO BOX 252
OMAHA NE 68101-0252

MAILED

JAN 27 2010

OFFICE OF PETITIONS

In re
Barry, et al.
Application No. 10/626,466
Filed: July 24, 2003
Patent No. 6,999,847
Issued: February 14, 2006

DECISION

This is a decision on the fee deficiency submission under 37 CFR 1.28(c), filed October 16, 2009.

The fee deficiency submission under 37 CFR 1.28 of $490 for the first year maintenance fee is hereby **accepted**.

The change of status to large entity has been entered.

The file does not indicate a change of address has been submitted, although the address given on the petition differs from the address of record. If appropriate, a change of address should be filed in accordance with MPEP 601.03. A courtesy copy of this decision is being mailed to the address given on the petition; however, the Office will mail all future correspondence solely to the address of record.

Telephone inquiries concerning this matter may be directed to the undersigned at (571) 272-3207.

Cliff Congo
Petitions Attorney
Office of Petitions

cc: Paul D. Yasger
Abbott Laboratories
D-0377, AP6A-1
100 Abbott Park Rd
Abbott Park, IL 60064-6008

UNITED STATES PATENT AND TRADEMARK OFFICE

Commissioner for Patents
United States Patent and Trademark Office
P.O. Box 1450
Alexandria, VA 22313-1450
www.uspto.gov

**CHRISTIE, PARKER & HALE**
**P.O. BOX 7068**
**PASADENA CA 91109-7068**

**COPY MAILED**

FEB 0 1 2006

**OFFICE OF PETITIONS**

| | | |
|---|---|---|
| In re Application of | : | |
| Robert Nicholson | : | |
| Application No. 10/626,474 | : | ON PETITION |
| Filed: July 23, 2003 | : | |
| Attorney Docket No. 50187/FLC/N322 | : | |

This is a decision on the petition, filed January 26, 2006, under 37 CFR 1.313(c)(2) to withdraw the above-identified application from issue after payment of the issue fee.

The petition is **GRANTED**.

The above-identified application is withdrawn from issue for consideration of a submission under 37 CFR 1.114 (request for continued examination). See 37 CFR 1.313(c)(2).

**Petitioner is advised that the issue fee paid on January 6, 2006, in the above-identified application cannot be refunded. If, however, the above-identified application is again allowed, petitioner may request that it be applied towards the issue fee required by the new Notice of Allowance.**[1]

Telephone inquiries should be directed to the undersigned at (571) 272-3208.

The examiner of Technology Center AU 3635 will consider the request for continued examination under 37 CFR 1.114.

Karen Creasy

Karen Creasy
Petitions Examiner
Office of Petitions
Office of the Deputy Commissioner
for Patent Examination Policy

---

[1] The request to apply the issue fee to the new Notice may be satisfied by completing and returning the new Issue Fee Transmittal Form PTOL-85(b), which includes the following language thereon: "Commissioner for Patents is requested to apply the Issue Fee and Publication Fee (if any) or re-apply any previously paid issue fee to the application identified above." Petitioner is advised that, whether a fee is indicated as being due or not, the Issue Fee Transmittal Form **must** be completed and timely submitted to avoid abandonment. Note the language in bold text on the first page of the Notice of Allowance and Fee(s) Due (PTOL-85).

## SPE RESPONSE FOR CERTIFICATE OF CORRECTION

Paper No.: _____

**DATE** : 06/20/2006

**TO SPE OF** : ART UNIT 1600 (1634)

**SUBJECT** : Request for Certificate of Correction on Patent No.: 6,916,634
**Attn: Frank Lu**

A response is requested with respect to the accompanying request for a certificate of correction.

Please complete this form and return with file, within 7 days to:
**Certificates of Correction Branch - PK 3-922**
Palm location **7580** - Tel. No. 305-8309

With respect to the change(s) requested, correcting Office and/or Applicant's errors, should the patent read as shown in the certificate of correction? No new matter should be introduced, nor should the scope or meaning of the claims be changed.

**Ok to make dependency change to claim 23 as requested in C of C?**

*Ernest C. White, LIE305-8339*
**Certificates of Correction Branch**

**Thank You For Your Assistance**

**The request for issuing the above-identified correction(s) is hereby:**
Note your decision on the appropriate box.

- ☒ **Approved** — **All** changes apply.
- ☐ **Approved in Part** — Specify below which changes **do not** apply.
- ☐ **Denied** — State the reasons for denial below.

**Comments:**

RAM R. SHUKLA, PH.D.
SUPERVISORY PATENT EXAMINER

1634

**SPE** **Art Unit**

UNITED STATES PATENT AND TRADEMARK OFFICE

COMMISSIONER FOR PATENTS
UNITED STATES PATENT AND TRADEMARK OFFICE
P.O. BOX 1450
ALEXANDRIA, VA 22313-1450
www.uspto.gov

KNOBBE MARTENS OLSON & BEAR LLP
2040 MAIN STREET
FOURTEENTH FLOOR
IRVINE, CA 92614

COPY MAILED
JUL 15 2004
OFFICE OF PETITIONS

| | |
|---|---|
| In re Application of | : |
| LIN | : DECISION REFUSING STATUS |
| Application No. 10/626,486 | : UNDER 37 CFR 1.47(b) |
| Filed: July 24, 2003 | : |
| Atty. Dkt. No.: SRGLT.004RA | : |
| For: TREATMENT OF PRESBYOPIA | : |
| AND OTHER EYE DISORDERS USING A | : |
| SCANNING LASER SYSTEM | : |

This decision is in response to the petition under 37 CFR 1.47(b), filed March 9, 2004.

The petition is **DISMISSED**.

Rule 47 applicant is given TWO MONTHS from the mailing date of this decision to reply, correcting the below-noted deficiencies. Any reply should be entitled "Request for Reconsideration of Petition Under 37 CFR 1.47(b)," and should only address the deficiencies noted below, except that the reply may include an oath or declaration executed by the non-signing inventor. Failure to respond will result in abandonment of the application. Any extensions of time will be governed by 37 CFR 1.136(a).

The above-identified application was filed July 24, 2003 without an executed oath or declaration and naming Jui-Teng Lin as sole inventor. Accordingly, a Notice to File Missing Parts of Reissue Application was mailed September 3, 2003 requiring, *inter alia*, an executed oath or declaration and a surcharge.

A grantable petition under 37 CFR 1.47(b) requires: (1) proof that the non-signing inventor cannot be reached or refuses to sign the oath or declaration after having been presented with the application papers (specification, claims and drawings); (2) an acceptable oath or declaration in compliance with 35 U.S.C. §§ 115 and 116; (3) the petition fee;(4) a statement of the last known address of the non-signing inventor; (5) proof of proprietary interest; and (6) a showing that such action is required to preserve the rights of the parties or to prevent irreparable damages.

The instant petition lacks item (2) set forth above. An acceptable oath or declaration for the patent application in compliance with 37 CFR 1.63 and 1.64 has not been presented. Any renewed petition must be accompanied by an oath or declaration in compliance with 37 CFR 1.63 and 37 CFR 1.175. The oath or declaration should be executed by a corporate officer, such as the president, vice president, secretary, or treasurer of the assignee on behalf of and as agent for the non-signing inventor. The corporate officer's title or position must be identified in the declaration. If an officer is unavailable to execute the declaration, the declaration may be signed on behalf of the corporation by one whose proof of signing authority has been submitted to the Office, such as the corporation's attorney. The signature block of the non-signing inventor should remain unexecuted. Petitioner's attention is directed to MPEP 409.03(b) for further guidance.

Further correspondence with respect to this matter should be addressed as follows:

| | |
|---|---|
| By mail: | Mail Stop Petition<br>Commissioner for Patents<br>P.O. Box 1450<br>Alexandria, VA 22313-1450 |
| By facsimile: | (703) 308-6916 |
| By delivery service:<br>(FedEx, UPS, DHL, etc.) | U.S. Patent and Trademark Office<br>220 20th Street S.<br>Customer Window, Mail Stop Petition<br>Crystal Plaza Two, Lobby, Room 1B03<br>Arlington, VA 22202 |

Telephone inquiries regarding this decision should be directed to the undersigned at (703) 305-0310.

Alesia M. Brown
Senior Petitions Attorney
Office of Petitions

UNITED STATES PATENT AND TRADEMARK OFFICE

COMMISSIONER FOR PATENTS
UNITED STATES PATENT AND TRADEMARK OFFICE
P.O. BOX 1450
ALEXANDRIA, VA 22313-1450
www.uspto.gov

KNOBBE MARTENS OLSON & BEAR LLP
2040 MAIN STREET
FOURTEENTH FLOOR
IRVINE, CA 92614

COPY MAILED
NOV 30 2004
OFFICE OF PETITIONS

| | |
|---|---|
| In re Application of | : |
| LIN | : DECISION REFUSING STATUS |
| Application No. 10/626,486 | : UNDER 37 CFR 1.47(b) |
| Filed: July 24, 2003 | : |
| Atty. Dkt. No.: SRGLT.004RA | : |
| For: TREATMENT OF PRESBYOPIA | : |
| AND OTHER EYE DISORDERS USING A | : |
| SCANNING LASER SYSTEM | : |

This decision is in response to the renewed petition under 37 CFR 1.47(b), filed September 20, 2004.

The petition is **DISMISSED**.

Rule 47 applicant is given TWO MONTHS from the mailing date of this decision to reply, correcting the below-noted deficiencies. Any reply should be entitled "Request for Reconsideration of Petition Under 37 CFR 1.47(b)," and should only address the deficiencies noted below, except that the reply may include an oath or declaration executed by the non-signing inventor. Failure to respond will result in abandonment of the application. Any extensions of time will be governed by 37 CFR 1.136(a).

The above-identified application was filed July 24, 2003 without an executed oath or declaration and naming Jui-Teng Lin as sole inventor. Accordingly, a Notice to File Missing Parts of Reissue Application was mailed September 3, 2003 requiring, *inter alia*, an executed oath or declaration and a surcharge. A petition under 37 CFR 1.47(b) was filed April 1, 2004 and dismissed July 15, 2004.

A grantable petition under 37 CFR 1.47(b) requires: (1) proof that the non-signing inventor cannot be reached or refuses to sign the oath or declaration after having been presented with the application papers (specification, claims and drawings); (2) an acceptable oath or declaration in compliance with 35 U.S.C. §§ 115 and 116; (3) the petition fee;(4) a statement of the last known address of the non-signing inventor; (5) proof of proprietary interest; and (6) a showing that such action is required to

preserve the rights of the parties or to prevent irreparable damages.

The instant petition lacks item (2) set forth above. An acceptable oath or declaration for the patent application in compliance with 37 CFR 1.63 and 1.64 has not been presented. Any renewed petition must be accompanied by an oath or declaration in compliance with 37 CFR 1.63 and 37 CFR 1.175. The declaration submitted with the instant renewed petition is unacceptable as it fails to set forth the citizenship of the non-signing inventor as required at 37 CFR 1.63(a)(3).

Any renewed petition must comply fully comply with the requirements of 37 CFR 1.175 and 37 CFR 1.63.

Further correspondence with respect to this matter should be addressed as follows:

| | |
|---|---|
| By mail: | Mail Stop Petition<br>Commissioner for Patents<br>P.O. Box 1450<br>Alexandria, VA 22313-1450 |
| By facsimile: | (703) 308-6916 |
| By delivery service:<br>(FedEx, UPS, DHL, etc.) | U.S. Patent and Trademark Office<br>220 20th Street S.<br>Customer Window, Mail Stop Petition<br>Crystal Plaza Two, Lobby, Room 1B03<br>Arlington, VA 22202 |

Telephone inquiries regarding this decision should be directed to the undersigned at (571) 272-3205.

Alesia M. Brown
Senior Petitions Attorney
Office of Petitions

UNITED STATES PATENT AND TRADEMARK OFFICE

COMMISSIONER FOR PATENTS
UNITED STATES PATENT AND TRADEMARK OFFICE
P.O. BOX 1450
ALEXANDRIA, VA 22313-1450
www.uspto.gov

KNOBBE MARTENS OLSON & BEAR LLP
2040 MAIN STREET
FOURTEENTH FLOOR
IRVINE, CA 92614

**COPY MAILED**

APR 14 2005

**OFFICE OF PETITIONS**

| | |
|---|---|
| In re Application of | : |
| LIN | : DECISION GRANTING STATUS |
| Application No. 10/626,486 | : UNDER 37 CFR 1.47(b) |
| Filed: July 24, 2003 | : |
| Atty. Dkt. No.: SRGLT.004RA | : |
| For: TREATMENT OF PRESBYOPIA | : |
| AND OTHER EYE DISORDERS USING A | : |
| SCANNING LASER SYSTEM | : |

This decision is in response to the renewed petition under 37 CFR 1.47(b), filed December 15, 2004.

The petition is **GRANTED**.

Petitioner has shown that inventor Jui-Teng Lin has refused to execute the declaration for the above-identified application after having been presented with the application papers.

The above-identified application and papers have been reviewed and found in compliance with 37 CFR 1.47(b). This application is hereby accorded Rule 1.47(b) status.

As provided in Rule 1.47(c), this Office will forward notice of this application's filing to the non-signing inventors at the addresses given in the petition. Notice of the filing of this application will also be published in the Official Gazette.

After this decision is mailed, the above-identified application will be returned to the Office of Initial Patent Examination for further processing.

Telephone inquiries regarding this decision should be directed to the undersigned at (571) 272-3205.

Alesia M. Brown
Petitions Attorney
Office of Petitions

UNITED STATES PATENT AND TRADEMARK OFFICE

COMMISSIONER FOR PATENTS
UNITED STATES PATENT AND TRADEMARK OFFICE
P.O. BOX 1450
ALEXANDRIA, VA 22313-1450
www.uspto.gov

Jui-Teng Lui
Coleman Low FCI
846 NE 54th Terrace, Box 1029
Coleman, Florida 33521

**COPY MAILED**

APR 14 2005

**OFFICE OF PETITIONS**

In re Application of :
LIN :
Application No. 10/626,486 : LETTER
Filed: July 24, 2003 :
Atty. Dkt. No.: SRGLT.004RA :
For: TREATMENT OF PRESBYOPIA :
AND OTHER EYE DISORDERS USING A :
SCANNING LASER SYSTEM :

Dear Sir:

You are named as an inventor in the above-identified United States patent application filed under the provisions of 35 U.S.C. 116 (United States Code) and 37 C.F.R. § 1.47(b), Rules of Practice in Patent Cases. Should a patent be granted on the application you will be designated therein as a joint inventor.

As a named inventor you are entitled to inspect any paper in the file wrapper of the application, order copies of all or any part thereof (at a prepaid cost as per 37 C.F.R. § 1.19) or make your position of record in the application. Alternatively, you may arrange to do any of the preceding through a registered patent attorney or agent presenting written authorization from you. If you care to join the application, counsel of record (see below) would presumably assist you. Joining in the application would entail the filing of an appropriate oath or declaration by you pursuant to 37 C.F.R. § 1.63.

Requests for information regarding your application should be directed to the File Information Unit at (703) 308-2733. Information regarding how to pay for and order a copy of the application, or a specific paper in the application, should be directed to Certification Division at (703) 308-9726 or 1-800-972-6382 (outside the Washington D.C. area).

Telephone inquiries regarding this matter should be directed to the undersigned at (571) 272-3205.

Alesia M. Brown
Petitions Attorney
Office of Petitions

UNITED STATES PATENT AND TRADEMARK OFFICE

COMMISSIONER FOR PATENTS
UNITED STATES PATENT AND TRADEMARK OFFICE
P.O. BOX 1450
ALEXANDRIA, VA 22313-1450
www.uspto.gov

Richard A. DeCristofaro
KNOBBE MARTENS OLSON & BEAR LLP
2040 Main Street
Fourteenth Floor
Irvine, CA 92614

(For Patent Owner)

MAILED

MAY 23 2005

REEXAM UNIT

William A. Munck, Esq.
P.O. Drawer 800889
Dallas, TX 75380

(For Requester)

| | |
|---|---|
| In re Reissue Application of<br>Jui-Teng Lin<br>Application No.: 10/626,486<br>Filed: July 24, 2003<br>For: U.S. Patent No. 6,263,879 | DECISION, *SUA SPONTE*,<br>TO MERGE<br>REISSUE AND<br>REEXAMINATION<br>PROCEEDINGS |
| In re Jui-Teng Lin<br>Reexamination Proceeding<br>Control No.: 90/006,090<br>Filed: August 22, 2001<br>For: U.S. Patent No.: 6,263,879 | |

The above reissue application and reexamination proceedings are before the Office of Patent Legal Administration for *sua sponte* consideration of whether the proceedings should be merged under 37 CFR 1.565(d) at this time.

## REVIEW OF FACTS

1. U.S. Patent No. 6,263,879 (the '879 patent) issued on July 24, 2001.

2. A request for reexamination, assigned control No. 90/006,090 (the '6090 reexamination proceeding), was filed by a third party requester on August 22, 2001.

3. Reexamination was ordered for the '6090 reexamination proceeding on October 9, 2001.

4. A terminal disclaimer for the '879 patent was received from the patent owner on January 30, 2002.

5. A non-final Office action was mailed in the '6090 reexamination proceeding on May 28, 2003.

6. A response to the non-final Office action in the '6090 reexamination proceeding was received from the patent owner on July 21, 2003.

7. An application for reissue, assigned application No. 10/626,486 (the '6486 application), was filed by the patent owner on July 24, 2003.

8. A supplemental response to the non-final Office action in the '6090 reexamination proceeding was received from the patent owner on March 1, 2004.

9. A non-final Office action was mailed in the '6090 reexamination proceeding on April 29, 2005.

10. Notice of the filing of the reissue application was published in the *Official Gazette* on October 7, 2003.

## DISCUSSION REGARDING MERGER

Under 37 CFR 1.565(d):

> "If a reissue application and an *ex parte* reexamination proceeding on which an order pursuant to § 1.525 has been mailed are pending concurrently on a patent, a decision will normally be made to merge the two proceedings or to suspend one of the two proceedings."

As evidenced by the above review of facts, reissue application No. 10/626,486 and reexamination control No. 90/006,090 are currently pending. Since the order to reexamine has been mailed in the reexamination proceeding, a decision under 37 CFR 1.565(d) is timely.

The general policy of the Office is that a reissue application examination and a reexamination proceeding will not be conducted separately at the same time as to a particular patent. The reason for this policy is to prevent inconsistent, and possibly conflicting, amendments from being introduced into the two proceedings on behalf of the patent owner. Normally, the proceedings will be merged when it is desirable to do so in the interest of expediting the prosecution of both proceedings. In making a decision on whether or not to merge the two proceedings, consideration will be given to the status of each proceeding. See MPEP 2285.

In order to provide efficient and prompt handling of all proceedings and to prevent inconsistent, and possibly conflicting, amendments from being introduced on behalf of the patent owner, it is appropriate that the instant reissue and the reexamination proceedings be merged and a joint examination be conducted. Accordingly, the examination of the reissue application and the reexamination proceedings will be merged in accordance with the decision set forth below.

It is to be noted, however, that the grant of merger of a reissue application and an *ex parte* reexamination proceeding under 37 CFR 1.565(d) is discretionary. *The present merger is not an assurance that, in a future similar situation, merger would be ordered.*

## DECISION MERGING THE REISSUE AND REEXAMINATION PROCEEDINGS

### I. Merger of Proceedings

The above-captioned reissue and reexamination proceedings are hereby merged. A joint examination will be conducted in accordance with the following guidelines and requirements.

### II. Requirement for Same Amendments in Both Proceedings

1. The patent owner is required to maintain identical amendments in the reissue application and the reexamination proceeding files for purposes of the merged proceeding. The maintenance of identical amendments in both files is required as long as the proceedings remain merged. See 37 CFR 1.565(d).

2. A review of the reexamination file for the proceeding of reexamination control No. 90/006,090 shows that original patent claims 1-13 are present and claims 14-23 are added by amendment. A review of reissue application No. 10/626,486 shows that original patent claims 1-13 are present and claims 14-23 are added by amendment. Accordingly, the claims are identical in number, but may or may not be identical as to content in both proceedings.

   If the claims are different as to content, an appropriate housekeeping amendment is required within ONE (1) MONTH of this decision placing the same amendments in both cases, specifically, Application No. 10/626,486, and Control Number 90/006,090. The response to the requirement must be limited to placing the same amendments in all cases, and patent owner must not address any issue of patentability in the housekeeping amendment.

   If the claims are identical as to text, a patent owner statement to that effect is required within ONE (1) MONTH of this decision.

### III. Conduct of the Merged Reissue Application Examination and Reexamination Proceedings

1. After the appropriate housekeeping amendment or statement as per Part II above is received, or after the time for same expires, the examiner should promptly prepare an Office action.

2. In the event that a housekeeping amendment is not timely submitted, any claim which does not contain identical text in both proceedings should be rejected under 35 U.S.C. 112, paragraph 2, as being indefinite as to the content of the claims, and thus failing to particularly point out the invention.

3. Because the statutory provisions for reissue application examination include, *inter alia*, provisions equivalent to 35 U.S.C. 305 relating to the conduct of reexamination proceedings, the merged examination will be conducted on the basis of the rules relating to the broader, reissue-application examination. The examiner will apply the reissue statute, rules, and case law to the merged proceeding. However, periods of response should be set at TWO (2) months to comply with the statutory requirement for special dispatch in *ex parte* reexamination (35 U.S.C. 305).

4. Each Office action issued by the examiner will take the form of a single action which jointly applies to the reissue application and the reexamination proceeding. Each action will contain identifying data for both of the cases, i.e, the reissue application and the reexamination proceeding, and each action will be physically entered into both files (which will be maintained as separate files).

5. Any response by the applicant/patent owner must consist of a single response, with two copies being filed for entry into the two files, with each of the two bearing a signature. Any such responses must be served on the requester, who will also be sent copies of Office actions.

6. The filing of any amendments to the drawings, specification or claims must comply with the provisions for amendment in a reissue application set forth in 37 CFR 1.173, and the guidelines of MPEP § 1453 37 CFR 1.121 does not apply to amendments in reissue. Accordingly, clean copies of the amended claims are not required and *are not to be submitted*. Instead, amendments are to be presented via markings pursuant to 37 CFR 1.173(d) of this section, except that a claim should be canceled by a statement canceling the claim, without presentation of the text of the claim.

   Pursuant to 37 CFR 1.173(g), all amendments must be made relative to the patent specification, including the claims, and drawings, which are in effect as of the date of filing the reissue application. Amendments are *not to be made relative to previous amendments*. Thus, for all amendments, all words not appearing in the patent are always underlined, and only words being deleted from *the patent* appear in brackets.

7. Where a paper is filed which requires payment of a fee (e.g., petition fee, appeal fee, brief fee, oral hearing fee), only a single fee need be paid. For example, only one fee need be paid for patent owner's appeal brief, even though the brief relates to merged multiple proceedings and copies must be filed (as pointed out above) for each file in the merged proceeding.

8. Upon return of the present merged proceeding to the examiner, the examiner will review the files to insure that each file contains identical citations of prior patents and printed publications, and the examiner will cite such documents as are necessary as part of the next action in order to place the files in that condition.

9. If the reissue application ultimately matures into a reissue patent, the reexamination proceeding shall be concluded by the grant of the reissue patent, and the reissue patent will serve as the certificate under 37 CFR 1.570. See MPEP 2285.

10. If the applicant/patent owner fails to file a timely and appropriate response to any Office action, the reissue application will be held abandoned, and the merger will be dissolved. With respect to the reexamination proceeding, the Director will proceed to issue a reexamination certificate under 37 CFR 1.570 in accordance with the last action of the Office, unless further action is clearly needed as a result of the difference in rules relating to reexamination and reissue proceedings. For any further action in the reexamination proceeding, any grounds of rejection which are not applicable under reexamination would be withdrawn (e.g., based on public use or sale), and any new grounds of rejection which are applicable under reexamination (e.g., improperly broadened claims) would be made by the examiner upon dissolution of the merged proceeding. The

existence of any questions/issues remaining which cannot be considered under reexamination following the dissolution would be noted by the examiner as not being proper under reexamination pursuant to 37 CFR 1.552(c).

11. If the applicant/patent owner files an express abandonment of the reissue application pursuant to 37 CFR 1.138, the next Office action of the examiner will accept the express abandonment, dissolve the merged proceeding, and continue examination as to the reexamination proceedings. Such examination would be conducted as set forth in the immediately preceding paragraph.

## CONCLUSION

1. Reissue application No. 10/626,486 and reexamination control No. 90/006,090. ARE MERGED into a single consolidated proceeding. A copy of this merger decision will be made of record in both of the files.

2. Pursuant to Part II of this decision, to the extent the claims differ between the two proceedings, a housekeeping amendment is required within ONE MONTH of this decision, placing the same amendments in all cases of the present merged proceeding. **If the claims are identical as to text, a patent owner statement to that effect is required within ONE MONTH of this decision.**

3. The reissue and reexamination files are being forwarded to the examiner via the Director of Technology Center 3700. Upon receipt of same, the examiner should not issue an Office action for the present merged proceeding of the reissue and reexamination proceedings until after the earlier of (a) the submission of the housekeeping amendment to place the same amendments in both cases or a statement that the claims are identical as to text, or (b) the expiration of the ONE MONTH period (from the mailing of this decision) set in part 2 of the "Conclusion."

4. All further examination in the merged proceeding should be conducted in accordance with Part III of this decision.

5. Telephone inquiries related to this decision should be directed to Anton W. Fetting, Senior Legal Advisor, at (571) 272-7717.

Kenneth M. Schor
Senior Legal Advisor
Office of Patent Legal Administration

May 20, 2005
C:\kiva\kenpetmerger\6090_10626486_SuaSponteMrg_same_number_of_cls.doc

UNITED STATES PATENT AND TRADEMARK OFFICE

Commissioner for Patents
United States Patent and Trademark Office
P.O. Box 1450
Alexandria, VA 22313-1450
www.uspto.gov

Jason C. White
BRINKS HOFER GILSON & LIONE
P.O. BOX 10395
CHICAGO IL 60610

**COPY MAILED**

MAY 2 2 2008

**OFFICE OF PETITIONS**

| | | |
|---|---|---|
| In re Application of: | : | |
| Crockett et al. | : | LETTER REGARDING |
| Application No. 10/626492 | : | PATENT TERM ADJUSTMENT |
| Filing or 371(c) Date: 07/23/2003 | : | |
| Atty Docket No. 8285/632 | : | |

This letter is in response to the "REQUEST FOR REVIEW OF PATENT TERM ADJUSTMENT," filed March 7, 2008. Pursuant to applicant's duty of good faith and candor to the Office, applicant discloses that the initial determination of patent term adjustment of 124 days may extend the term of this patent by too many days.

The request for review of the determination of patent term adjustment (PTA) is **granted**.

The Office has updated the PAIR screen to reflect that the correct Patent Term Adjustment (PTA) determination at the time of the mailing of the Notice of Allowance is **sixty-three (63) days**. A copy of the updated PAIR screen, showing the correct determination, is enclosed.

On January 10, 2008, the Office mailed the Determination of Patent Term Adjustment under 35 U.S.C. 154(b) in the above identified application. The Notice stated that the patent term adjustment (PTA) to date is one hundred twenty-four (124) days.

The Office initially determined a patent term adjustment of one hundred twenty-four (124) days based on an adjustment for PTO delay of two hundred-eighteen (218) days pursuant to 37 C.F.R. § 1.702(a)(1), reduced by one ninety-four (94) days of applicant delay pursuant to 37 C.F.R. § 1.704(b).

37 C.F.R. § 1.704(b) states:

> With respect to the grounds for adjustment set forth in §§ 1.702(a) through (e), and in particular the ground of adjustment set forth in § 1.702(b), an applicant shall be deemed to have failed to engage in reasonable efforts to conclude

> processing or examination of an application for the cumulative total of any periods of time in excess of three months that are taken to reply to any notice or action by the Office making any rejection, objection, argument, or other request, measuring such three-month period from the date the notice or action was mailed or given to the applicant, in which case the period of adjustment set forth in § 1.703 shall be reduced by the number of days, if any, beginning on the day after the date that is three months after the date of mailing or transmission of the Office communication notifying the applicant of the rejection, objection, argument, or other request and ending on the date the reply was filed. The period, or shortened statutory period, for reply that is set in the Office action or notice has no effect on the three-month period set forth in this paragraph.;

Applicant should have been assessed additional delay of sixty-one (61) days pursuant to 37 C.F.R. § 1.704(b). Applicant filed a Request for Continued Examination ("RCE") and Amendment on June 12, 2006, in response to a final Office action mailed January 12, 2006, which was sixty-one (61) days after April 12, 2006 - three (3) months after the date of mailing of the final Office action.

In view thereof, the correct determination of patent term adjustment at the time of the mailing of the Notice of Allowance is **sixty-three (63) days** ((218 days of PTO delay, reduced by 155 (94+61)) days of applicant delay), subject to any terminal disclaimer.

As this letter was submitted as an advisement to the Office of an error in applicant's favor, the Office will not assess the $200.00 fee under 37 CFR 1.18(e). The Office thanks applicant for their good faith and candor in bringing this to the attention of the Office.

The file is being forwarded to the Office of Data Management for processing into a patent. The patent term adjustment indicated on the patent (as shown on the Issue Notification mailed about three weeks prior to patent issuance) will include any additional adjustment accrued both for Office delay in issuing the patent more than four months after payment of the issue fee and satisfaction of all outstanding requirements, and for the Office taking in excess of three years to issue the patent (to the extent that the three-year period does not overlap with periods already accorded).

Telephone inquiries specific to this matter should be directed to Attorney Derek L. Woods, at (571) 272-3232.

Nancy Johnson
Senior Petitions Attorney
Office of Petitions

Enclosure: Updated PAIR Screen

Day : Monday
Date: 5/19/2008

# PALM INTRANET

Time: 16:56:22

| PTA Calculations for Application: 10/626492 | | | |
|---|---|---|---|
| Application Filing Date: | 07/23/2003 | PTO Delay (PTO): | 218 |
| Issue Date of Patent: | | Three Years: | 0 |
| Pre-Issue Petitions: | 0 | Applicant Delay (APPL): | 94 |
| Post-Issue Petitions: | 0 | Total PTA (days): | 63 |
| PTO Delay Adjustment: | -61 | | |

**File Contents History**

| Number | Date | Contents Description | PTO | APPL | START |
|---|---|---|---|---|---|
| 60 | 05/19/2008 | ADJUSTMENT OF PTA CALCULATION BY PTO | | 61 | |
| 53 | 01/10/2008 | MAIL NOTICE OF ALLOWANCE | | | |
| 52 | 01/08/2008 | ISSUE REVISION COMPLETED | | | |
| 51 | 01/08/2008 | DOCUMENT VERIFICATION | | | |
| 50 | 01/08/2008 | NOTICE OF ALLOWANCE DATA VERIFICATION COMPLETED | | | |
| 49 | 01/07/2008 | NOTICE OF ALLOWABILITY | | | |
| 48 | 09/26/2007 | DATE FORWARDED TO EXAMINER | | | |
| 47 | 09/24/2007 | AMENDMENT AFTER FINAL REJECTION | | | |
| 46 | 07/24/2007 | MAIL FINAL REJECTION (PTOL - 326) | | | |
| 45 | 07/20/2007 | FINAL REJECTION | | | |
| 44 | 05/16/2007 | DATE FORWARDED TO EXAMINER | | | |
| 43 | 05/08/2007 | RESPONSE AFTER NON-FINAL ACTION | | | |
| 42 | 02/08/2007 | MAIL NON-FINAL REJECTION | | | |
| 41 | 02/05/2007 | NON-FINAL REJECTION | | | |
| 40 | 11/29/2006 | DATE FORWARDED TO EXAMINER | | | |
| 39 | 11/21/2006 | RESPONSE AFTER NON-FINAL ACTION | | | |
| 38 | 08/22/2006 | MAIL NON-FINAL REJECTION | | | |
| 37 | 08/18/2006 | NON-FINAL REJECTION | | | |
| 36 | 07/19/2006 | DATE FORWARDED TO EXAMINER | | | |
| 35 | 06/12/2006 | REQUEST FOR CONTINUED EXAMINATION (RCE) | | | |
| 34 | 07/19/2006 | DISPOSAL FOR A RCE/CPA/129 (EXPRESS ABANDONMENT IF CPA) | | | |
| 33 | 06/17/2006 | DATE FORWARDED TO EXAMINER | | | |
| 32 | 06/12/2006 | AMENDMENT SUBMITTED/ENTERED WITH FILING OF CPA/RCE | | | |

| | | | | | |
|---|---|---|---|---|---|
| 31 | 06/12/2006 | REQUEST FOR EXTENSION OF TIME - GRANTED | | | |
| 30 | 06/12/2006 | WORKFLOW - REQUEST FOR RCE - BEGIN | | | |
| 29 | 03/21/2006 | CASE DOCKETED TO EXAMINER IN GAU | | | |
| 28 | 01/12/2006 | MAIL FINAL REJECTION (PTOL - 326) | | | |
| 27 | 01/09/2006 | FINAL REJECTION | | | |
| 26 | 02/09/2004 | INFORMATION DISCLOSURE STATEMENT CONSIDERED | | | |
| 25 | 12/06/2005 | CASE DOCKETED TO EXAMINER IN GAU | | | |
| 24 | 11/07/2005 | DATE FORWARDED TO EXAMINER | | | |
| 23 | 10/31/2005 | RESPONSE AFTER NON-FINAL ACTION | | 94 | 21 |
| 22 | 10/31/2005 | REQUEST FOR EXTENSION OF TIME - GRANTED | | | |
| 21 | 04/29/2005 | MAIL NON-FINAL REJECTION | 218 | | -1 |
| 20 | 04/27/2005 | NON-FINAL REJECTION | | | |
| 19 | 04/12/2005 | CASE DOCKETED TO EXAMINER IN GAU | | | |
| 18 | 04/05/2005 | CASE DOCKETED TO EXAMINER IN GAU | | | |
| 17 | 01/25/2005 | CASE DOCKETED TO EXAMINER IN GAU | | | |
| 16 | 08/18/2004 | CASE DOCKETED TO EXAMINER IN GAU | | | |
| 15 | 06/15/2004 | CASE DOCKETED TO EXAMINER IN GAU | | | |
| 14 | 06/15/2004 | IFW TSS PROCESSING BY TECH CENTER COMPLETE | | | |
| 13 | 02/09/2004 | REFERENCE CAPTURE ON IDS | | | |
| 12.7 | 02/09/2004 | INFORMATION DISCLOSURE STATEMENT (IDS) FILED | | | |
| 12 | 02/09/2004 | INFORMATION DISCLOSURE STATEMENT (IDS) FILED | | | |
| 11 | 04/07/2004 | APPLICATION RETURN FROM OIPE | | | |
| 10 | 04/07/2004 | APPLICATION RETURN TO OIPE | | | |
| 9 | 04/07/2004 | APPLICATION DISPATCHED FROM OIPE | | | |
| 8 | 04/07/2004 | APPLICATION IS NOW COMPLETE | | | |
| 7 | 02/09/2004 | PAYMENT OF ADDITIONAL FILING FEE/PREEXAM | | | |
| 6 | 02/09/2004 | A STATEMENT BY ONE OR MORE INVENTORS SATISFYING THE REQUIREMENT UNDER 35 USC 115, OATH OF THE APPLIC | | | |
| 5 | 12/05/2003 | NOTICE MAILED--APPLICATION INCOMPLETE--FILING DATE ASSIGNED | | | |
| 4 | 10/27/2003 | CLEARED BY L&R (LARS) | | | |
| 3 | 10/09/2003 | INTENTIONALLY REFERRED BY OIPE OR L&R | | | |

| | | | | | |
|---|---|---|---|---|---|
| 2 | 09/10/2003 | IFW SCAN & PACR AUTO SECURITY REVIEW | | | |
| 1 | 07/23/2003 | INITIAL EXAM TEAM NN | | | |

**Search Another: Application#** Search

**EXPLANATION OF PTA CALCULATION**

**EXPLANATION OF PTE CALCULATION**

To go back, right click here and select Back. To go forward, right click here and select Forward. To refresh, right click here and select Refresh.

Back to OASIS | Home page

UNITED STATES PATENT AND TRADEMARK OFFICE

COMMISSIONER FOR PATENTS
UNITED STATES PATENT AND TRADEMARK OFFICE
P.O. BOX 1450
ALEXANDRIA, VA 22313-1450
www.uspto.gov

MATTINGLY, STANGER, MALUR & BRUNDIDGE, P.C.
1800 DIAGONAL ROAD
SUITE 370
ALEXANDRIA, VA 22314

COPY MAILED

AUG 09 2005

OFFICE OF PETITIONS

| | | |
|---|---|---|
| In re Application of | : | |
| Baychar | : | |
| Filed: July 25, 2003 | : | ON PETITION |
| Application No. 10/626,523 | : | |
| Docket No.: BAY-410-04 | : | |

This decision is in response to the "PETITION IN RESPONSE TO NOTICE OF INCOMPLETE NONPROVISIONAL APPLICATION," filed May 20, 2005.

The application was filed July 25, 2003. On May 13, 2005, a Notice of Incomplete Nonprovisional Application was mailed indicating that the application had not been accorded a filing date because the application appeared to have been submitted without drawings as required. On May 19, 2005, the Notice mailed May 13, 2005 was withdrawn *sua sponte* by the Office of Initial Patent Examination. The instant petition was filed May 20, 2005.

In view of the withdrawal of Notice, the instant petition is hereby **DISMISSED AS MOOT**.

No fee is due in connection with this matter.

This application is being returned to the Office of Initial Patent Examination with a filing date of July 25, 2003.

Telephone inquiries related to this decision may be directed to the undersigned at (571) 272-3205.

Alesia M. Brown
Petitions Attorney
Office of Petitions

UNITED STATES PATENT AND TRADEMARK OFFICE

COMMISSIONER FOR PATENTS
UNITED STATES PATENT AND TRADEMARK OFFICE
P.O. BOX 1450
ALEXANDRIA, VA 22313-1450
www.uspto.gov

RADER FISHMAN & GRAUER PLLC
LION BUILDING
1233 20TH STREET N.W., SUITE 501
WASHINGTON, DC 20036

COPY MAILED

JUL 1 5 2004

OFFICE OF PETITIONS

In re Application of
Yasushi Sakai
Application No. 10/626,525
Filed: July 25, 2003
Attorney Docket No. OHT-0019

: DECISION ON PETITION

This is a decision on the petition filed June 4, 2004, requesting that the above-identified application be accorded a filing date of July 25, 2003.

The application was deposited on July 25, 2003. However, on May 18, 2004, Initial Patent Examination Division mailed a Notice stating that, while a filing date had been accorded the application papers, a drawing of Figure 1 described in the specification was omitted from the application.

In response, on June 4, 2004, the present petition and requisite petition fee were filed. Petitioner argues that twelve (12) sheets of drawings were included with the application papers deposited on July 25,2003. As evidence thereof, petitioner submitted a copy of his postcard receipt. Petitioner requests that the application, including a drawing of Figure 1, be accorded a filing date of July 25, 2003. A copy of one sheet of drawing containing Figure 1 was also submitted.

A postcard receipt which itemizes and properly identifies the items which are being filed serves as *prima facie* evidence of receipt in the USPTO of all items listed thereon on the date stamped thereon by the USPTO. See MPEP 503. A review of the postcard receipt reveals that: (1) it was date stamped as received in the Office of Initial Patent Examination (OIPE) on July 25, 2003; (2) it specifically identifies the items being filed, including *inter alia* "Drawings (12 sheets)"; and (3) it lacks any annotation of non-receipt of any item denoted on the postcard.

A review of the application file uncovers eleven (11) sheets of drawings filed July 25, 2003, with no sheet containing a drawing of Figure 1 present among the application papers. However, the evidence is convincing that the application papers deposited on July 25, 2003 contained twelve (12) sheets of drawings including a drawing of Figure 1, which was subsequently misplaced in the PTO. Therefore, petitioner has shown that a drawing of Figure 1 was among the items present in the application on the date of deposit and should be included in the original disclosure.

In view of the above, the petition is GRANTED. The one (l) sheet of drawing containing Figure 1 submitted with the petition will be used for examination purposes.

The Notice mailed May 18, 2004, was sent in error and is hereby vacated. Since the petition was a result of PTO error, the $130.00 petition fee is being refunded.

The application is being returned to Initial Patent Examination Division for further processing with a filing date of July 25, 2003, using the application papers filed July 25, 2003 and the one

(1) sheet of drawing filed June 4, 2004, and an indication on the bibliographic data sheet that twelve (12) sheets of drawings were included on filing.

Telephone inquires related to this decision should be directed to the undersigned at (703) 305-9220. Telephone inquiries related to Initial Patent Examination Division processing should be directed to their hotline at (703) 308-1202.

Sherry D. Brinkley
Petitions Examiner
Office of Petitions
Office of the Deputy Commissioner
for Patent Examination

UNITED STATES PATENT AND TRADEMARK OFFICE

Commissioner for Patents
United States Patent and Trademark Office
P.O. Box 1450
Alexandria, VA 22313-1450
www.uspto.gov

FITZPATRICK CELLA HARPER & SCINTO
30 ROCKEFELLER PLAZA
NEW YORK NY 10112-3801

**COPY MAILED**

JUN 09 2006

**OFFICE OF PETITIONS**

| | |
|---|---|
| In re | : |
| Ikeda, et al. | : DECISION REGARDING |
| Application No. 10/626,536 | : PATENT TERM ADJUSTMENT |
| Filed: July 25, 2003 | : |
| Patent No. 7,025,431 | : |
| Issued: April 11, 2006 | : |

This decision is in response to the "COMMENTS ON DETERMINATION OF PATENT TERM ADJUSTMENT", filed May 26, 2006, requesting correction of the patent term adjustment (PTA) indicated on the patent.

The request is **DISMISSED**.

The Office determined a patent term adjustment of two hundred thirty-one (231) days based on an adjustment for PTO delay of fifty-eight (58) days pursuant to 35 U.S.C. 154(b)(1)(A)(i) and 37 C.F.R. § 1.703(a)(1), and two hundred ninety-three (293) days pursuant to 35 U.S.C. 154(b)(1)(A)(iv) and 37 C.F.R. § 1.703(a)(6), reduced by one hundred twenty (120) days of applicant delay pursuant to 35 U.S.C. 154(b)(1)(C)(i) and 37 C.F.R. § 1.704(c)(10).

A review of the application does not reveal any errors in the calculation of the patent term adjustment. Accordingly, the patent term adjustment of two hundred thirty-one (231) days appears to be correct. To the extent that patentees are aware of any specific error in the PTA calculation, patentees should so advise the Office.

Telephone inquiries specific to this letter should be directed to Cliff Congo, Petitions Attorney, at (571)272-3207.

Kery Fries
Senior Legal Advisor
Office of Patent Legal Administration
Office of Deputy Commissioner
for Patent Examination Policy

UNITED STATES PATENT AND TRADEMARK OFFICE

Commissioner for Patents
United States Patent and Trademark Office
P.O. Box 1450
Alexandria, VA 22313-1450
www.uspto.gov

**FITZPATRICK CELLA HARPER & SCINTO**
**30 ROCKEFELLER PLAZA**
**NEW YORK, NY 10112**

COPY MAILED

SEP 12 2005

OFFICE OF PETITIONS

In re Application of :
Jeffrey Kent Fredenburgh et al :
Application No. 10/626,537 :
Filed: July 25, 2003 :
Attorney Docket No. JJ-10 072-1-1US :

ON PETITION

This is a decision on the petition under 37 CFR 1.313(c)(2), filed September 2, 2005, to withdraw the above-identified application from issue after payment of the issue fee.

The petition is **GRANTED**.

The above-identified application is withdrawn from issue for consideration of a submission under 37 CFR 1.114 (request for continued examination). See 37 CFR 1.313(c)(2).

**Petitioner is advised that the issue fee paid on June 28, 2005 in the above-identified application cannot be refunded. If, however, the above-identified application is again allowed, petitioner may request that it be applied towards the issue fee required by the new Notice of Allowance.**[1]

Telephone inquiries should be directed to Wan Laymon at (571) 272-3220.

This matter is being referred to Technology Center AU 1651 for processing of the request for continued examination under 37 CFR 1.114.

Wan Laymon
Petitions Examiner
Office of Petitions
Office of the Deputy Commissioner
for Patent Examination Policy

---

[1] The request to apply the issue fee to the new Notice may be satisfied by completing and returning the new Issue Fee Transmittal Form PTOL-85(b), which includes the following language thereon: "Commissioner for Patents is requested to apply the Issue Fee and Publication Fee (if any) or re-apply any previously paid issue fee to the application identified above." Petitioner is advised that, whether a fee is indicated as being due or not, the Issue Fee Transmittal Form **must** be completed and timely submitted to avoid abandonment. Note the language in bold text on the first page of the Notice of Allowance and Fee(s) Due (PTOL-85).

UNITED STATES PATENT AND TRADEMARK OFFICE

COMMISSIONER FOR PATENTS
UNITED STATES PATENT AND TRADEMARK OFFICE
P.O. BOX 1450
ALEXANDRIA, VA 22313-1450
www.uspto.gov

MAILED

FEB 04 2009

OFFICE OF PETITIONS

**BUCHANAN INGERSOLL & ROONEY PC**
**P.O. BOX 1404**
**ALEXANDRIA, VA 22313-1404**

In re Patent No. 6,854,197 :
Issue Date: February 15, 2005 :
Application No. 10/626,606 : NOTICE
Filed: July 25, 2003 :
Attorney Docket No. 018300-043 :

This is a notice regarding your request for acceptance of a fee deficiency submission under 37 CFR 1.28. On September 1, 1998, the Court of Appeals for the Federal Circuit held that 37 CFR 1.28(c) is the sole provision governing the time for correction of the erroneous payment of the issue fee as a small entity. **See DH Technology v. Synergystex International, Inc. 154 F.3d 1333, 47 USPQ2d 1865 (Fed. Cir. Sept. 1, 1998).**

The Office no longer investigates or rejects original or reissue applications under 37 CFR 1.56. **1098 Off. Gaz. Pat. Office 502 (January 3, 1989)**. Therefore, nothing in this Notice is intended to imply that an investigation was done.

Your fee deficiency submission under 37 CFR 1.28 is hereby **ACCEPTED**.

This application is no longer entitled to small entity status. Accordingly, all future fees paid in this application must be paid at the large entity rate.

Inquiries related to this communication should be directed to the undersigned at (571) 272-3208.

Karen Creasy

Karen Creasy
Petitions Examiner
Office of Petitions

## SPE RESPONSE FOR CERTIFICATE OF CORRECTION

**Paper No.**: _____

**DATE** : 09/01/09

**TO SPE OF** : ART UNIT 2625

**SUBJECT** : Request for Certificate of Correction for Appl. No.: 10626608 Patent No.: 7554685

Please respond to this request for a certificate of correction within 7 days.

**FOR IFW FILES:**

Please review the requested changes/corrections as shown in the **COCIN** document(s) in the IFW application image. No new matter should be introduced, nor should the scope or meaning of the claims be changed.

Please complete the response (see below) and forward the completed response to scanning using document code **COCX**.

**FOR PAPER FILES:**

Please review the requested changes/corrections as shown in the attached certificate of correction. Please complete this form (see below) and forward it with the file to:

**Certificates of Correction Branch (C of C)**
**Randolph Square 9C62-D**
**Palm Location 7580**

You can fax the Directors/SPE response to 571-270-9990

*Lamonte Newsome*

**Certificates of Correction Branch**

**703-756-1574**

**Thank You For Your Assistance**

**The request for issuing the above-identified correction(s) is hereby:**

Note your decision on the appropriate box.

- ☒ **Approved** — **All** changes apply.
- ☐ **Approved in Part** — Specify below which changes **do not** apply.
- ☐ **Denied** — State the reasons for denial below.

**Comments:** _____

/Edward L. Coles Sr/

## SPE RESPONSE FOR CERTIFICATE OF CORRECTION

**SPE** **Art Unit**

## SPE RESPONSE FOR CERTIFICATE OF CORRECTION

**Paper No.**:20050513

10/626,655

**DATE** : May 13, 2005

**TO SPE OF** : ART UNIT 2851

**SUBJECT** : Request for Certificate of Correction on Patent No.: 6,840,624

A response is requested with respect to the accompanying request for a certificate of correction.

Please complete this form and return with file, within **7** days to:
**Certificates of Correction Branch - PK 3-910**
Palm location **7590** - Tel. No. 305-8201

With respect to the change(s) requested, correcting Office and/or Applicant's errors, should the patent read as shown in the certificate of correction? No new matter should be introduced, nor should the scope or meaning of the claims be changed.

**Thank You For Your Assistance** **Certificates of Correction Branch**

**The request for issuing the above-identified correction(s) is hereby:**
Note your decision on the appropriate box.

☒ **Approved** **All** changes apply.

☐ **Approved in Part** Specify below which changes **do not** apply.

☐ **Denied** State the reasons for denial below.

**Comments:**

Judy Nguyen

**SPE:** Judy Nguyen **Art Unit** 2851

UNITED STATES PATENT AND TRADEMARK OFFICE

UNITED STATES DEPARTMENT OF COMMERCE
United States Patent and Trademark Office
Address: COMMISSIONER FOR PATENTS
P.O. Box 1450
Alexandria, Virginia 22313-1450
www.uspto.gov

BURNS, DOANE, SWECKER & MATHIS, L.L.P.
P.O. Box 1404
Alexandria, VA 22313-1404

Mail Date: 04/21/2010

| | | |
|---|---|---|
| **Applicant** | : Daisuke Sakiyama | : DECISION ON REQUEST FOR |
| **Patent Number** | : 7643163 | : RECALCULATION of PATENT |
| **Issue Date** | : 01/05/2010 | : TERM ADJUSTMENT IN VIEW |
| **Appliction No** | : 10/626,672 | : OF WYETH AND NOTICE OF INTENT TO |
| **Filed** | : 07/25/2003 | : ISSUE CERTIFICATE OF CORRECTION |
| | | : |

The Request for Recalculation is **GRANTED** to the extent indicated.

The patent term adjustment has been determined to be **1565** days. The USPTO will *sua sponte* issue a certificate of correction reflecting the amount of PTA days determined by the recalculation.

Prior to the issuance of the certificate of correction, the USPTO will afford patentee an opportunity to be heard and request reconsideration. Accordingly, patentee has **one month or thirty (30) days**, whichever is longer, to file a request for reconsideration of this patent term adjustment calculation. See 35 U.S.C. 154(b)(3)(B)(ii) and 37 CFR 1.322(a)(4). No extensions of time will be granted under 37 CFR 1.136.

Patentee should use document code PET.OP if electronically filing a request for reconsideration of this patent term adjustment calculation. The patentee must also include the information required by 37 CFR 1.705(b)(2) and the fee required by 37 CFR 1.18(e). If patentee does not file a timely request for reconsideration of this patent term adjustment calculation including the information required by 37 CFR 1.705(b)(2) and the fee required by 37 CFR 1.18(e), the USPTO will issue a certificate of correction reflecting the PTA determination noted above.

Patentee should be aware that in order to preserve the right to review in the United States District Court for the District of Columbia of the USPTO patent term adjustment determination, patentee must ensure that he or she also take the steps required under 35 U.S.C. 154(b)(4)(A) in a timely manner. Nothing in the request for recalculation should be construed as providing an alternative time frame for commencing a civil action under 35 U.S.C. 154(b)(4)(A).

Any questions concerning this decision should be directed to the Office of Patent Legal Administration at 571-272-7702.

UNITED STATES PATENT AND TRADEMARK OFFICE

Commissioner for Patents
United States Patent and Trademark Office
P.O. Box 1450
Alexandria, VA 22313-1450
www.uspto.gov

COPY MAILED
OCT 0 2 2006
OFFICE OF PETITIONS

BIRCH STEWART KOLASCH & BIRCH
PO BOX 747
FALLS CHURCH, VA 22040-0747

| | |
|---|---|
| In re Application of | : |
| Cornelissen et al. | : |
| Application No.: 10/626,695 | : ON PETITION |
| Filed: July 25, 2003 | : |
| Attorney Docket No: 0142-0419P | : |

This is a decision on the petition filed December 20, 2004, requesting that the above-identified application be accorded a filing date of July 25, 2005.

The petition is **granted**.

On July 25, 2003, the above-identified application was filed. On October 20, 2004, the Office of Initial Patent Examination mailed a "Notice of Incomplete Nonprovisional Application" (the "Notice"), stating that the application had not been accorded a filing date because a specification did not accompany the application papers. The Notice allowed a non-extendable two-month period for reply beginning from the mailing date of the Notice.

In response, on December 20, 2004, applicants filed the present petition and a postcard receipt date-stamped by the Office acknowledging having received twelve pages of a specification on July 25, 2003, among other items.

Upon review of the record, the specification was not located among the original application papers. The evidence is convincing, however, that twelve pages of the specification accompanied the application papers filed on July 25, 2003. Therefore, the application, including the specification, was complete on filing and entitled a filing date of July 25, 2003.

The application file will be directed to the Office of Initial Patent Examination for further processing with a filing date of July 25, 2003. The Office of Initial Patent Examination will issue a corrected filing receipt.

Any inquiries related to this decision should be directed to the undersigned at (571) 272-3222.

Kenya A. McLaughlin
Petitions Attorney
Office of Petitions

UNITED STATES PATENT AND TRADEMARK OFFICE

UNITED STATES DEPARTMENT OF COMMERCE
United States Patent and Trademark Office
Address: COMMISSIONER FOR PATENTS
P.O. Box 1450
Alexandria, Virginia 22313-1450
www.uspto.gov

THOMAS, KAYDEN, HORSTEMEYER & RISLEY, LLP
600 GALLERIA PARKWAY, S.E.
STE 1500
ATLANTA, GA 30339-5994

Mail Date: 04/21/2010

| | | |
|---|---|---|
| **Applicant** | : Patrick Duvaut | : DECISION ON REQUEST FOR |
| **Patent Number** | : 7633999 | : RECALCULATION of PATENT |
| **Issue Date** | : 12/15/2009 | : TERM ADJUSTMENT IN VIEW |
| **Appliction No** | : 10/626,714 | : OF WYETH AND NOTICE OF INTENT TO |
| **Filed** | : 07/25/2003 | : ISSUE CERTIFICATE OF CORRECTION |
| | | : |

The Request for Recalculation is **GRANTED** to the extent indicated.

The patent term adjustment has been determined to be **1818** days. The USPTO will *sua sponte* issue a certificate of correction reflecting the amount of PTA days determined by the recalculation.

Prior to the issuance of the certificate of correction, the USPTO will afford patentee an opportunity to be heard and request reconsideration. Accordingly, patentee has **one month or thirty (30) days**, whichever is longer, to file a request for reconsideration of this patent term adjustment calculation. See 35 U.S.C. 154(b)(3)(B)(ii) and 37 CFR 1.322(a)(4). No extensions of time will be granted under 37 CFR 1.136.

Patentee should use document code PET.OP if electronically filing a request for reconsideration of this patent term adjustment calculation. The patentee must also include the information required by 37 CFR 1.705(b)(2) and the fee required by 37 CFR 1.18(e). If patentee does not file a timely request for reconsideration of this patent term adjustment calculation including the information required by 37 CFR 1.705(b)(2) and the fee required by 37 CFR 1.18(e), the USPTO will issue a certificate of correction reflecting the PTA determination noted above.

Patentee should be aware that in order to preserve the right to review in the United States District Court for the District of Columbia of the USPTO patent term adjustment determination, patentee must ensure that he or she also take the steps required under 35 U.S.C. 154(b)(4)(A) in a timely manner. Nothing in the request for recalculation should be construed as providing an alternative time frame for commencing a civil action under 35 U.S.C. 154(b)(4)(A).

Any questions concerning this decision should be directed to the Office of Patent Legal Administration at 571-272-7702.

UNITED STATES PATENT AND TRADEMARK OFFICE

Commissioner for Patents
United States Patent and Trademark Office
P.O. Box 1450
Alexandria, VA 22313-1450
www.uspto.gov

NIXON PEABODY, LLP
401 9TH STREET, NW
SUITE 900
WASHINGTON DC 20004-2128

COPY MAILED

AUG 2 4 2004

OFFICE OF PETITIONS

ON PETITION

In re Application of :
Yasuhiro Shimada et al. :
Application No. 10/626,722 :
Deposited: July 25, 2003 :
Attorney Docket No.: 740819-1015 :

This is a decision on the petition under 37 CFR 1.182, filed June 15, 2004, to change the order of the names of the inventors.

The petition is **GRANTED**.

The order of the names of the inventors will be changed as follows:

1. Yasuhiro Shimada
2. Yoshihisa Kato

A corrected filing receipt reflecting the correct order of the names of the inventors is attached.

This application is being returned to Technology Center 2824 for continued examination.

Telephone inquiries concerning this matter may be directed to the undersigned Petitions Attorney at (703)305-4497.

Patricia Faison-Ball
Senior Petitions Attorney
Office of Petitions

ATTACHMENT: Corrected Filing Receipt

UNITED STATES PATENT AND TRADEMARK OFFICE

Commissioner for Patents
United States Patent and Trademark Office
P.O. Box 1450
Alexandria, VA 22313-1450
www.uspto.gov

CROMPTON, SEAGER & TUFTE, LLC
1221 NICOLLET AVENUE
SUITE 800
MINNEAPOLIS, MN 55403-2420

COPY MAILED
DEC 10 2008

| | | |
|---|---|---|
| In re Application of | : | |
| Tracee E.J. Eidenschink | : | |
| Application No. 10/626,794 | : | DECISION ON PETITION |
| Filed: July 22, 2003 | : | |
| Attorney Docket No. 1001.2253102 | : | |

This is a decision on the petition under the unintentional provisions of 37 CFR 1.137(b), filed September 4, 2008, to revive the above-identified application.

It is not apparent whether the statement of unintentional delay was signed by a person who would have been in a position of knowing that the entire delay in filing the required reply from the due date for the reply until the filing of a grantable petition pursuant to 37 CFR 1.137(b) was unintentional. Nevertheless, in accordance with 37 CFR 10.18, the statement is accepted as constituting a certification of unintentional delay. However, in the event that petitioner has no knowledge that the delay was unintentional, petitioner must make such an inquiry to ascertain that, in fact, the delay was unintentional. If petitioner discovers that the delay was intentional, petitioner must so notify the Office.

This application became abandoned for failure to timely pay the issue and publication fees on or before August 29, 2008, as required by the Notice of Allowance and Fee(s) Due, mailed May 29, 2008. Accordingly, the date of abandonment of this application is August 30, 2008.

The petition satisfies the requirements of 37 CFR 1.137(b) in that petitioner has supplied (1) the reply in the form of payment of the issue fee of $1440 and the publication fee of $300, (2) the petition fee of $1540; and (3) a proper statement of unintentional delay.

The petition is **GRANTED**.

Telephone inquiries concerning this decision should be directed to undersigned at (571) 272-1642.

This application is being referred to the Office of Data Management for processing into a patent.

April M. Wise
Petitions Examiner
Office of Petitions

UNITED STATES PATENT AND TRADEMARK OFFICE

Commissioner for Patents
United States Patent and Trademark Office
P.O. Box 1450
Alexandria, VA 22313-1450
www.uspto.gov

COPY MAILED
AUG 0 4 2006
OFFICE OF PETITIONS

Laubscher & Laubscher, P.C.
1160 Spa Road, Suite 2B
Annapolis, MD 21403

| | | |
|---|---|---|
| In re Application of | : | |
| Mark PEARSON | : | |
| Application No. 10/626,801 | : | DECISION ON PETITION |
| Filed: July 23, 2003 | : | TO WITHDRAW |
| Attorney Docket No. 23324 | : | FROM RECORD |
| | : | |

This is a decision on the Request to Withdraw as attorney or agent of record under 37 C.F.R. § 1.36(b), filed January 11, 2006.

The request is **APPROVED**.

A grantable request to withdraw as attorney/agent of record must be signed by every attorney/agent seeking to withdraw or contain a clear indication that one attorney is signing on behalf of another/others. A request to withdraw will not be approved unless at least 30 (thirty) days would remain between the date of approval and the later of the expiration date of a time to file a response or the expiration date of the maximum time period which can be extended under 37 C.F.R. § 1.136(a).

The request was signed by Lawrence E. Laubscher, Jr. on behalf of all attorneys of record.

All attorneys/agents have been withdrawn.

Applicant is reminded that there is no attorney of record at this time.

All future correspondence will be directed to the first named inventor Mark Pearson at the address indicated below.

Telephone inquiries concerning this decision should be directed to Monica A. Graves at 571-272-7253.

David Bucci
Petitions Examiner
Office of Petitions

cc: Mark Pearson
2733 North Power Road, Suite 102-463
Mesa, AZ 85215

UNITED STATES PATENT AND TRADEMARK OFFICE

Commissioner for Patents
United States Patent and Trademark Office
P.O. Box 1450
Alexandria, VA 22313-1450
www.uspto.gov

JJGJR.: 07-06

Paper No: __

COPY MAILED

JUL 17 2006

OFFICE OF PETITIONS

PFIZER INC.
PATENT DEPARTMENT, MS8260-1611
EASTERN POINT ROAD
GROTON CT 06340

| | | |
|---|---|---|
| In re Application of | : | |
| Auffret, et al. | : | |
| Application No. 10/626,811 | : | DECISION |
| Filing Date: 23 July, 2003 | : | |
| Attorney Docket No.: PC25042A | : | |

This is a decision on the petition filed on 12 May, 2006, alleging unintentional delay under 37 C.F.R. §1.137(b).

For the reasons set forth below, the petition under 37 C.F.R.§1.137(b) is **GRANTED**.

## BACKGROUND

The record reflects that:

- Petitioner failed to reply timely and properly to the non-final Office action mailed on 9 August, 2005, with reply due absent extension of time on or before 9 November,2005;
- the instant application went abandoned after midnight 9 November 2005;
- it does not appear that the Office mailed a Notice of Abandonment before the instant petition was filed;

- on 12 May, 2006, Petitioner filed the instant petition (with fee), reply in the form of an amendment, and made the statement of unintentional delay.

## STATUTES, REGULATIONS AND ANALYSIS

Congress has authorized the Commissioner to "revive an application if the delay is shown to the satisfaction of the Commissioner to have been "unavoidable." 35 U.S.C. §133 (1994).[1]

The regulations at 37 C.F.R. §1.137(a) and (b) set forth the requirements for a petitioner to revive a previously unavoidably or unintentionally, respectively, abandoned application under this congressional grant of authority. The language of 35 U.S.C. §133 and 37 C.F.R. §1.137(a) is clear, unambiguous, and without qualification: the delay in tendering the reply to the outstanding Office action, as well as filing the first petition seeking revival, must have been unavoidable for the reply now to be accepted on petition.[2]

Delays in responding properly raise the question whether delays are unavoidable.[3] Where there is a question whether the delay was unavoidable, Petitioners must meet the burden of establishing that the delay was unavoidable within the meaning of 35 U.S.C. §133 and 37 C.F.R. §1.137(a).[4] And the Petitioner must be diligent in attending to the matter.[5] Failure to do so does not constitute the care required under Pratt,[6] and so cannot satisfy the test for diligence and due care.

(By contrast, unintentional delays are those that do not satisfy the very strict statutory and

---

[1] 35 U.S.C. §133 provides:
**35 U.S.C. §133 Time for prosecuting application.**
Upon failure of the applicant to prosecute the application within six months after any action therein, of which notice has been given or mailed to the applicant, or within such shorter time, not less than thirty days, as fixed by the Commissioner in such action, the application shall be regarded as abandoned by the parties thereto, unless it be shown to the satisfaction of the Commissioner that such delay was unavoidable.

[2] Therefore, by example, an unavoidable delay in the payment of the Filing Fee might occur if a reply is shipped by the US Postal Service, but due to catastrophic accident, the delivery is not made.

[3] See: *Changes to Patent Practice and Procedure*; *Final Rule Notice*, 62 *Fed. Reg.* at 53158-59 (October 10, 1997), 1203 *Off. Gaz. Pat. Office* at 86-87 (October 21, 1997).

[4] See: In re Application of G, 11 USPQ2d 1378, 1380 (Comm'r Pats. 1989).

[5] See: Diligence in Filing Petitions to Revive and Petitions to Withdraw the Holding of Abandonment, 1124 Off. Gaz. Pat. Office 33 (March 19, 1991). It was and is Petitioner's burden to exercise diligence in seeking either to have the holding of abandonment withdrawn or the application revived. See 1124 Off. Gaz. Pat. Office supra.

[6] The test of diligence in the prosecution of an application before the Commissioner is, in the context of ordinary human affairs, the test is such care as is generally used and observed by prudent and careful persons in relation to their most important business. Ex parte Pratt, 1887 Dec. Comm'r Pat. 31 (Comm'r Pat. 1887); Ex parte Henrich, 1913 Dec. Comm'r Pat. 139, 141 (Comm'r. Pat. 1913).

regulatory requirements of unavoidable delay, and also, by definition, are not intentional.[7]))

As to the Allegation
of Unintentional Delay

The requirements for a grantable petition under 37 C.F.R. §1.137(b) are the petition and fee, a statement/showing of unintentional delay, a proper reply, and–where appropriate--a terminal disclaimer and fee.

It appears that Petitioner has satisfied the requirements of the regulation.

## CONCLUSION

The petition under 37 C.F.R. §1.137(b) hereby is **granted**.

The instant application is released to Technology Center 1600 for further processing in due course.

Telephone inquiries concerning this decision may be directed to the undersigned at (571) 272-3214.

John J. Gillon, Jr.
Senior Attorney
Office of Petitions

[7] Therefore, by example, an unintentional delay in the reply might occur if the reply and transmittal form are to be prepared for shipment by the US Postal Service, but other pressing matters distract one's attention and the mail is not timely deposited for shipment.

UNITED STATES PATENT AND TRADEMARK OFFICE

Commissioner for Patents
United States Patent and Trademark Office
P.O. Box 1450
Alexandria, VA 22313-1450
www.uspto.gov

SHERIDAN ROSS PC
1560 BROADWAY
SUITE 1200
DENVER CO 80202

**COPY MAILED**

SEP 17 2004

**OFFICE OF PETITIONS**

| | | |
|---|---|---|
| In re Application of | : | |
| Chessman, et al. | : | |
| Application No. 10/626,812 | : | DECISION GRANTING |
| Filed: July 23, 2003 | : | PETITION |
| Attorney Docket No. 3123-366-1 | : | |
| For: SPRING DISK CLAMP UTILIZING WEDGED RETAINING RING | | |

This is a decision on the petition filed August 9, 2004 (certificate of mailing date August 6, 2004), to accord the above-identified application a filing date of July 23, 2003.

On July 23, 2003, the application was deposited.

On July 22, 2004, the Office of Initial Patent Examination mailed a Notice stating that the specification was missing and that a filing date would be accorded upon receipt of the missing item.

In response, the present petition alleges that the specification, claims, and drawings were inadvertently omitted. However, the Utility Patent Application Transmittal sheet incorporated by reference the entire disclosure of the parent application, no. 09/905,385, now U. S. Patent No. 6,624,968. The specification and drawings in the parent and divisional appear to be identical.

The Office allows an applicant to rely upon an incorporation by reference of a parent application when a portion of the child application has been inadvertently omitted.

Based on the incorporation by reference, it appears that the specification and drawings were present in the Office on July 23, 2003, albeit in the file of another application, i.e., application No. 09/905,385, now U. S. Patent No. 6,624,968. Therefore, on petition, the application may be accorded the requested filing date of July 23, 2003.

In view of the above, the petition is **granted**. The copy of the specification, claims, and drawings submitted with the petition will be used for examination purposes .[1] No new oath/declaration is required, as the specification, claims, and drawings are from the parent application and the oath submitted on July 23, 2003 is a copy of the oath/declaration from the parent application.

---

[1] The Office assumes that the specification, drawings, and claims are a true and exact copy of the specification, drawings, and claims submitted in the parent application. If this is not the case, then petitioner must notify the Office. Of course, the primary examiner is expected to compare the instant specification and drawings to the disclosure of the parent application in order to verify that the specification and drawings are, in fact, parts of the disclosure of the prior application.

The petition fee of $130 will not be refunded since the petition was required to accord the application the requested filing date.

The Application is being returned to the Office of Initial Patent Examination for further processing with a filing date of July 23, 2003, using copy of the specification, claims, and drawings filed on August 9, 2004 (certificate of mailing date August 6, 2004).

Telephone inquiries should be directed to the undersigned at (703) 308-6712.

E. Shirene Willis

E. Shirene Willis
Senior Petitions Attorney
Office of Petitions
Office of the Deputy Commissioner
for Patent Examination Policy

DATE 6/18/07 APPLICATION NUMBER 10626833

DOC CODE Pet Dec DOC DATE 6/19/07

DELIVER THE ATTACHED FIFLE/DOCUMENT TO THE TC SCANNING CENTER

CONTRACTOR: THE ATTACHED FILE/DOCUMENT MUST BE INDEXED AND SCANNED INTO IFW WITHIN **8** WORK HOURS; UPLOADING OF THE SCANNED IMAGES SHOULD OCCUR NO LATER THAN **16** WORK HOURS FOLLOWING RECEIPT OF THIS REQUEST

AFTER SCANNING, ORIGINAL DOCUMENTS SHOULD BE BOXED IN ACCORDANCE WITH INSTRUCTIONS

UNITED STATES PATENT AND TRADEMARK OFFICE

Commissioner for Patents
United States Patent and Trademark Office
P.O. Box 1450
Alexandria, VA 22313-1450
www.uspto.gov

**NIXON PEABODY, LLP**
**401 9TH STREET, NW**
**SUITE 900**
**WASHINGTON DC 20004-2128**

**COPY MAILED**

JUN 19 2007

**OFFICE OF PETITIONS**

| | | |
|---|---|---|
| In re Application of<br>Ramchandran, Amit<br>Application No. 10/626,833<br>Filed: July 23, 2003<br>Attorney Docket No. 046301-088000 (021202-003710US) | :<br>:<br>:<br>:<br>: | ON PETITION |

This is a decision on the petition under 37 C.F.R. § 1.137(b), filed May 3, 2007, to revive the above-identified application.

The petition is **GRANTED.**

The petition satisfies the conditions for revival pursuant to the provisions of 37 CFR 1.137(b) in that (1) the reply in the form of a continuing application; (2) the petition fee; and (3) the required statement of unintentional delay have been received. Accordingly, the response has been accepted as having been unintentionally delayed.

The extension of time fee of $510.00 was inadvertently charged twice. Accordingly, one of the charges will be refunded to petitioner's deposit account as authorized.

The above-identified application is being revived solely for purposes of continuity. As continuity has been established by this decision reviving the above-identified application, the above-identified application is again abandoned in favor of continuing application No. 11/800,577.

Telephone inquiries regarding this decision should be directed to the undersigned at (571) 272-3206.

Liana Walsh
Petitions Examiner
Office of Petitions

United States
Patent And
Trademark Office

P.O. Box 1450, Alexandria, Virginia 22313-1450 – www.uspto.gov

**PETITION DECISION**

07/30/04

CHRISTIAN AUSTIN-HOLLANDS ESQ.
P.O. BOX 170325
SAN FRANCISCO CA 94117

Dear Applicant:

The Box PG Pub replacement drawings for application number 10/626856 received on 04/02/04 by the U. S. Patent and Trademark Office will be included for patent publication.

Telephone inquiries should be directed to Kaletus King, Office of Pre-Grant Publication 703 605-4283.

Kaletus King
Signature of Reviewer, Office of Pre-Grant Publication

BEST AVAILABLE COPY

UNITED STATES PATENT AND TRADEMARK OFFICE

Commissioner for Patents
United States Patent and Trademark Office
P.O. Box 1450
Alexandria, VA 22313-1450
www.uspto.gov

MAY 23 2005

FOLEY AND LARDNER
SUITE 500
3000 K STREET NW
WASHINGTON DC 20007

| | |
|---|---|
| In re Application of | : |
| Lomryd et al. | : |
| Serial No.: 10/626,857 | : PETITION TO MAKE SPECIAL |
| Filed: July 25, 2003 | : |
| Attorney Docket No.: 052209-0105 | : |

This is in response to applicants' petition filed April 25, 2005, to make the above-identified application special under the provisions of 37 CFR 1.102(d).

Applicants have satisfied the provisions set forth in M.P.E.P. 708.02, VIII. (A), (B), (C), (D), and (E). The $130.00 petition fee as required by 37 CFR 1.17(h) was paid by check. Therefore, the petition is **GRANTED**.

**The application will be forwarded the examiner for action on the merits commensurate with this decision**.

Should there be any questions with regard to this letter please contact Marianne C. Seidel by letter addressed to the Director, Technology Center 1600, P.O. Box 1450, Alexandria, VA 22313-1450, or by telephone at 571-272-0584 or by facsimile transmission at the general Office facsimile number, (703) 872-9306.

Marianne C. Seidel

Marianne C. Seidel
Special Program Examiner
Technology Center 1600

United States
Patent And
Trademark Office

P.O. Box 1450, Alexandria, Virginia 22313-1450 – www.uspto.gov

**PETITION DECISION**

05/11/04

Christian Austin-Hollands
P.O. Box 170325
San Francisco, CA 94117

Dear Applicant:

The Box PG Pub replacement drawings for application number 10/626875 received on 04/15/04 by the U. S. Patent and Trademark Office will be included for patent publication.

Telephone inquiries should be directed to Kaletus King, Office of Pre-Grant Publication 703 605-4283.

Kaletus King
Signature of Reviewer, Office of Pre-Grant Publication

BEST AVAILABLE COPY

UNITED STATES PATENT AND TRADEMARK OFFICE

UNITED STATES DEPARTMENT OF COMMERCE
United States Patent and Trademark Office
Address: COMMISSIONER FOR PATENTS
P.O. Box 1450
Alexandria, Virginia 22313-1450
www.uspto.gov

| APPL NO. | FILING OR 371 (c) DATE | ART UNIT | FIL FEE REC'D | ATTY.DOCKET NO | DRAWINGS | TOT CLMS | IND CLMS |
|---|---|---|---|---|---|---|---|
| 10/626,891 | 07/24/2003 | 1637 | 1002 | 07678/078003 | 9 | 19 | 6 |

**CONFIRMATION NO. 2555**

21559
CLARK & ELBING LLP
101 FEDERAL STREET
BOSTON, MA 02110

**CORRECTED FILING RECEIPT**

*OC000000018574574*

Date Mailed: 04/19/2006

Receipt is acknowledged of this regular Patent Application. It will be considered in its order and you will be notified as to the results of the examination. Be sure to provide the U.S. APPLICATION NUMBER, FILING DATE, NAME OF APPLICANT, and TITLE OF INVENTION when inquiring about this application. Fees transmitted by check or draft are subject to collection. Please verify the accuracy of the data presented on this receipt. **If an error is noted on this Filing Receipt, please mail to the Commissioner for Patents P.O. Box 1450 Alexandria Va 22313-1450. Please provide a copy of this Filing Receipt with the changes noted thereon. If you received a "Notice to File Missing Parts" for this application, please submit any corrections to this Filing Receipt with your reply to the Notice. When the USPTO processes the reply to the Notice, the USPTO will generate another Filing Receipt incorporating the requested corrections (if appropriate).**

**Applicant(s)**

Dongmei Xu, Lexington, KY;
Mark T. Nielsen, Lexington, KY;

**Power of Attorney:**

James DeCamp–43580

**Domestic Priority data as claimed by applicant**

This application is a CON of 09/641,466 08/18/2000 PAT 6,664,384
which claims benefit of 60/149,763 08/19/1999

**Foreign Applications**

**If Required, Foreign Filing License Granted:** 04/14/2004

**The country code and number of your priority application, to be used for filing abroad under the Paris Convention, is US10/626,891**

**Projected Publication Date:** Not Applicable

**Non-Publication Request:** No

**Early Publication Request:** No

**Title**

Duplicated cassava vein mosaic virus enhancers and uses thereof

**Preliminary Class**

435

## PROTECTING YOUR INVENTION OUTSIDE THE UNITED STATES

Since the rights granted by a U.S. patent extend only throughout the territory of the United States and have no effect in a foreign country, an inventor who wishes patent protection in another country must apply for a patent in a specific country or in regional patent offices. Applicants may wish to consider the filing of an international application under the Patent Cooperation Treaty (PCT). An international (PCT) application generally has the same effect as a regular national patent application in each PCT-member country. The PCT process **simplifies** the filing of patent applications on the same invention in member countries, but **does not result** in a grant of "an international patent" and does not eliminate the need of applicants to file additional documents and fees in countries where patent protection is desired.

Almost every country has its own patent law, and a person desiring a patent in a particular country must make an application for patent in that country in accordance with its particular laws. Since the laws of many countries differ in various respects from the patent law of the United States, applicants are advised to seek guidance from specific foreign countries to ensure that patent rights are not lost prematurely.

Applicants also are advised that in the case of inventions made in the United States, the Director of the USPTO must issue a license before applicants can apply for a patent in a foreign country. The filing of a U.S. patent application serves as a request for a foreign filing license. The application's filing receipt contains further information and guidance as to the status of applicant's license for foreign filing.

Applicants may wish to consult the USPTO booklet, "General Information Concerning Patents" (specifically, the section entitled "Treaties and Foreign Patents") for more information on timeframes and deadlines for filing foreign patent applications. The guide is available either by contacting the USPTO Contact Center at 800-786-9199, or it can be viewed on the USPTO website at http://www.uspto.gov/web/offices/pac/doc/general/index.html.

For information on preventing theft of your intellectual property (patents, trademarks and copyrights), you may wish to consult the U.S. Government website, http://www.stopfakes.gov. Part of a Department of Commerce initiative, this website includes self-help "toolkits" giving innovators guidance on how to protect intellectual property in specific countries such as China, Korea and Mexico. For questions regarding patent enforcement issues, applicants may call the U.S. Government hotline at 1-866-999-HALT (1-866-999-4158).

---

## LICENSE FOR FOREIGN FILING UNDER
## Title 35, United States Code, Section 184
## Title 37, Code of Federal Regulations, 5.11 & 5.15

**GRANTED**

The applicant has been granted a license under 35 U.S.C. 184, if the phrase "IF REQUIRED, FOREIGN FILING LICENSE GRANTED" followed by a date appears on this form. Such licenses are issued in all applications where the conditions for issuance of a license have been met, regardless of whether or not a license may be required as set forth in 37 CFR 5.15. The scope and limitations of this license are set forth in 37 CFR 5.15(a) unless an earlier license has been issued under 37 CFR 5.15(b). The license is subject to revocation upon written notification. The date indicated is the effective date of the license, unless an earlier license of similar scope has been granted under 37 CFR 5.13 or 5.14.

This license is to be retained by the licensee and may be used at any time on or after the effective date thereof unless it is revoked. This license is automatically transferred to any related applications(s) filed under 37 CFR 1.53(d). This license is not retroactive.

The grant of a license does not in any way lessen the responsibility of a licensee for the security of the subject matter as imposed by any Government contract or the provisions of existing laws relating to espionage and the national security or the export of technical data. Licensees should apprise themselves of current regulations especially with respect to certain countries, of other agencies, particularly the Office of Defense Trade Controls, Department of State (with respect to Arms, Munitions and Implements of War (22 CFR 121-128)); the Bureau of Industry and Security, Department of Commerce (15 CFR parts 730-774); the Office of Foreign Assets Control, Department of Treasury (31 CFR Parts 500+) and the Department of Energy.

**NOT GRANTED**

No license under 35 U.S.C. 184 has been granted at this time, if the phrase "IF REQUIRED, FOREIGN FILING LICENSE GRANTED" DOES NOT appear on this form. Applicant may still petition for a license under 37 CFR 5.12, if a license is desired before the expiration of 6 months from the filing date of the application. If 6 months has lapsed from the filing date of this application and the licensee has not received any indication of a secrecy order under 35 U.S.C. 181, the licensee may foreign file the application pursuant to 37 CFR 5.15(b).

O I P E JC24
AUG 0 5 2004
PATENT & TRADEMARK OFFICE

IFW

In the United States Patent and Trademark Office

10/27/04
Approved
JMStone
Jacqueline M. Stone, Director
Technology Center 1700

Serial Number: 10 / 626,892
Appn. Filed: 7/24/2003
Applicant(s): Graham, Craig et al.
Appn. Title: Foam Bun Mold Shim
Examiner/GAU: N/A / 1732

Request to Withdraw as Attorney/Agent of Record

August 3, 2004

Commissioner for Patents
P.O. Box 1450
Alexandria, VA 22313-1450

Dear Sir or Madam:

I hereby apply to withdraw as attorney/agent of record in connection with the above-identified application.

The reason for this request is that I have learned that YKK, the assignee of this application, recently received U.S. Patent # 6,684,466 (Nishida) for a child-resistant buckle. Serious questions of patentability and inventorship exist with respect to this patent, because YKK did not inform the Patent Office of the existence of my underlying U.S. Patent # 5,991,985, which it had licensed, and because prototypes I supplied to YKK as early as August 1999 show all the features in many claims of the YKK patent.

The YKK patent may become the subject of re-examination proceedings or litigation, thus creating a conflict of interest for me. The license referred to was executed before I became a patent agent, and is no longer in effect. Moreover, this application is in no way related to the YKK patent or my underlying patent. The situation would personally not affect my prosecution of this application. However, I believe it is important to avoid even the appearance of a conflict of interest, and thus I am requesting withdrawl.

I have duly notified YKK of my intention to withdraw, so that they may timely seek new representation.

Respectfully submitted,

John A. Galbreath
Registered Practitioner #46,718
2516 Chestnut Woods Court
Reisterstown, MD 21136
Tel. (410) 666-7274

**Certificate of Mailing:** I certify that on the date below, this document and referenced attachments, if any, was sent via first-class U.S. mail to: Commissioner for Patents, P.O. Box 1450, Alexandria, VA 22313-1450.

3 August 2004

John A. Galbreath

UNITED STATES PATENT AND TRADEMARK OFFICE

Commissioner for Patents
United States Patent and Trademark Office
P.O. Box 1450
Alexandria, VA 22313-1450
www.uspto.gov

MEADWESTVACO CORPORATION
LAW DEPARTMENT
4850-D NORTH CHURCH LANE
SMYRNA GA 30080

**COPY MAILED**

MAR 07 2005

**OFFICE OF PETITIONS**

| | | |
|---|---|---|
| In re Application of | : | |
| Bakx, et al. | : | DECISION ON PETITION |
| Application No. 10/626,904 | : | |
| Filed: February 25, 2005 | : | |
| Attorney Docket No. D-7870 | : | |

This is a decision on the petition filed February 25, 2005, pursuant to 37 CFR 1.137(b), to revive the above-identified application.

The petition is **GRANTED**.

The above-identified application became abandoned for failure to timely reply to the Notice to File Missing Parts, mailed April 21, 2004. This Notice set a period for reply of two months from the mailing date of the Notice to submit an executed oath or declaration, and a surcharge for its late filing. No extensions of time under the provisions of 37 CFR 1.136(a) were obtained. No reply having been received, the above-identified application became abandoned on June 22, 2004. A Notice of Abandonment was mailed on January 5, 2005.

With the instant petition, petitioner paid the petition fee, made the proper statement of unintentional delay, and submitted the declaration in response to the Notice to File Missing Parts.

The application file is being forwarded to the Office of Initial Patent Examination for pre-examination processing.

Telephone inquiries related to this decision should be directed to the undersigned at (571)272-3207.

Cliff Congo
Petitions Attorney
Office of Petitions

UNITED STATES PATENT AND TRADEMARK OFFICE

Commissioner for Patents
United States Patent and Trademark Office
P.O. Box 1450
Alexandria, VA 22313-1450
www.uspto.gov

Paper No.

SEYFARTH SHAW LLP
131 S. DEARBORN ST.
SUITE2400
CHICAGO IL 60603-5803

COPY MAILED

APR 10 2007

OFFICE OF PETITIONS

| | | |
|---|---|---|
| In re Application of | : | |
| Otaki et al. | : | DECISION ON PETITION |
| Application No. 10/626,908 | : | |
| Filed: July 25, 2003 | : | |
| Attorney Docket No. TJK/402 | : | |

This is a decision on the PETITION FOR REVIVAL OF AN APPLICATION FOR PATENT ABANDONED UNINTENTIONALLY UNDER 37 CFR 1.137(b) filed March 12, 2007.

The petition is **GRANTED**.

The above-identified application became abandoned for failure to file a reply to the non-final Office action mailed September 28, 2005. This Office action set a shortened statutory period for reply of three (3) months, with extensions of time obtainable under § 1.136(a). No reply considered timely filed and no extension of time considered obtained, the application became abandoned effective December 29, 2005. A courtesy Notice of Abandonment was mailed on April 6, 2006.

The petition includes the required reply in the form of an amendment, the statement of unintentional delay and payment of the petition fee. No terminal disclaimer is required.

Technology Center AU 1756 has been advised of this decision. The application is, thereby, forwarded to the examiner for consideration of the reply submitted on petition filed March 12, 2007.

Telephone inquiries specific to this matter should be directed to the undersigned at (571) 272-3219.

Nancy Johnson
Senior Petitions Attorney
Office of Petitions

US 107067380ZP1

Creation date: 04-12-2007
Indexing Officer: VKHOMRASAVONG - VIVIAN KHOMRASAVONG
Team: ZZZFEP
Dossier: 10706738

Legal Date: 04-10-2007

| No. | Doccode | Number of pages |
|---|---|---|
| 1 | PET.DEC.OIPE | 3 |

Total number of pages: 3

Remarks:

Order of re-scan issued on .....

UNITED STATES PATENT AND TRADEMARK OFFICE

Commissioner for Patents
United States Patent and Trademark Office
P.O. Box 1450
Alexandria, VA 22313-1450
www.uspto.gov

SCHLUMBERGER RESERVOIR COMPLETIONS
14910 AIRLINE ROAD
ROSHARON TX 77583

**COPY MAILED**

JAN 0 5 2007

**OFFICE OF PETITIONS**

| | | |
|---|---|---|
| In re Application of | : | |
| David Wei Wang, et al. | : | |
| Application No. 10/626,916 | : | DECISION GRANTING PETITION |
| Filed: July 25, 2003 | : | UNDER 37 CFR 1.313(c)(2) |
| Attorney Docket No. 68.0345 | : | |

This is a decision on the petition under 37 CFR 1.313(c)(2), filed January 3, 2007, to withdraw the above-identified application from issue after payment of the issue fee.

The petition is **GRANTED**.

The above-identified application is withdrawn from issue for consideration of a submission under 37 CFR 1.114 (request for continued examination). *See* 37 CFR 1.313(c)(2).

***Petitioner is advised that the issue fee paid on December 19, 2006 cannot be refunded. If, however, this application is again allowed, petitioner may request that it be applied towards the issue fee required by the new Notice of Allowance.***[1]

Telephone inquiries regarding this decision should be directed to April Wise at (571) 272-1642.

This application is being referred to Technology Center AU 3672 for processing of the request for continued examination under 37 CFR 1.114 and for consideration of the concurrently filed information disclosure statement.

Karen Creasy
Petitions Examiner
Office of Petitions

[1] *The request to apply the issue fee to the new Notice may be satisfied by completing and returning the new Part B – Fee(s) Transmittal Form (along with any balance due at the time of submission). Petitioner is advised that the Issue Fee Transmittal Form must be completed and timely submitted to avoid abandonment of the application.*

UNITED STATES PATENT AND TRADEMARK OFFICE

Commissioner for Patents
United States Patent and Trademark Office
P.O. Box 1450
Alexandria, VA 22313-1450
www.uspto.gov

Paper No.

Chih-Ta Star Sung
Rm. 308, Bld. 52, No. 195,
Sec. 4
Chung Hsin Rd.
Juhdong 310
TAIWAN

**COPY MAILED**
DEC 10 2008

In re Application of :
Chih-Ta Sung and :
Yen-Chieh Ouyang : ON PETITION
Application No. 10/626,917 :
Filed: July 25, 2003 :
Title: MOTION ESTIMATION :
METHOD AND APPARATUS FOR VIDEO:
DATA COMPRESSION :

This is in response to the PETITION FOR REVIVAL OF AN APPLICATION FOR PATENT ABANDONED UNINTENTIONALLY UNDER 37 CFR ABANDONED APPLICATION filed June 19, 2008.

The petition is **DISMISSED**.

Any request for reconsideration of this decision must be submitted within **TWO (2) MONTHS** from the mail date of this decision. Extensions of time under 37 C.F.R. § 1.136(a) are permitted. The reconsideration request should include a cover letter entitled "Renewed Petition under 37 C.F.R. § 1.137(b)."

The above-identified application became abandoned for failure to pay the Issue Fee and Publication Fee within three months of the mailing date, September 25, 2007, of the Notice of Allowance and Fee(s) Due. This Office action set a three-month nonextendable statutory period for reply. The issue fee and publication fee were received in the Office on Thursday, December 27, 2007. Unfortunately, this was outside of the period for reply. Accordingly, the application became abandoned. A courtesy Notice of Abandonment was mailed on May 13, 2008.

For a grantable petition under 37 CFR 1.137(b), applicants must submit the required reply[1] in the form of payment of the Issue Fee and Publication Fee; payment of the petition fee set forth in 37 CFR § 1.17(m); and a statement of unintentional delay. In this case, no terminal disclaimer is required.

Co-inventor Sung has submitted the items required by 37 CFR 1.137(b). However, the petition, including the statement of unintentional delay, is only signed by inventor Sung. This is not acceptable.

37 CFR 1.33(b), which is applicable to petitions filed in an application, requires that

> Amendments and other papers, except for written assertions pursuant to § 1.27(c)(2)(ii) of this part, filed in the application must be signed by:
>
> (1) A patent practitioner of record appointed in compliance with § 1.32(b);
> (2) A patent practitioner not of record who acts in a representative capacity under the provisions of § 1.34;
> (3) An assignee as provided for under § 3.71(b) of this chapter; or
> (4) All of the applicants (§ 1.41(b)) for patent, unless there is an assignee of the entire interest and such assignee has taken action in the application in accordance with § 3.71 of this chapter.

It is acknowledged that co-inventor Sung has signed many papers in this application. However, there is nothing of record to show that his signature is in compliance with 37 CFR 1.33(b) or no justification in the record for waiving the requirements of 37 CFR 1.33(b) in this application. The record does not support a conclusion that co-inventor Sung is a patent practitioner or has limited authority to sign on behalf of co-inventor Ouyang or that he is signing on behalf of the assignee. It is recognized that this application is assigned to Taiwan Imagingtek Corporation. However, the assignee has not taken action in the application in accordance with § 3.71. Specifically, the assignee has not filed a 3.73(b) statement and has not advised

[1] There was no distinct but concurrent requirement for corrected drawings.

the Office that inventor Sung is authorized to sign on behalf of the assignee.

On request for reconsideration, applicants may either have the petition signed by both inventor Sung and inventor Ouyang, or submit a properly completed statement under 3.73(b) establishing that inventor Sung's signature on the behalf of the assignee is sufficient. (For applicants' convenience, form PTO/SB/96, statement under 3.73(b) is enclosed. For the form to be complete, sections 1 or 2, and A or B, and the last box ☐ must be completed and the form must be properly signed).

Further correspondence with respect to this decision should be addressed as follows:

By mail: Mail Stop Petition
Commissioner for Patents
P.O. Box 1450
Alexandria, VA 22313-1450

By FAX: (571) 273-8300
ATTN: NANCY JOHNSON
SENIOR PETITIONS ATTORNEY

By hand: Customer Service Window
Randolph Building
401 Dulany Street
Alexandria, VA 22314

Telephone inquiries specific to this matter should be directed to the undersigned at (571) 272-3219.

Nancy Johnson
Senior Petitions Attorney
Office of Petitions

Enclosure: Form PTO/SB/96.

UNITED STATES PATENT AND TRADEMARK OFFICE

Commissioner for Patents
United States Patent and Trademark Office
P.O. Box 1450
Alexandria, VA 22313-1450
www.uspto.gov

Paper No.

Chih-Ta Star Sung
Rm. 308, Bld. 52, No. 195,
Sec. 4
Chung Hsin Rd.
Juhdong 310
TAIWAN

MAILED

MAR 16 2009

OFFICE OF PETITIONS

In re Application of :
Chih-Ta Sung and :
Yen-Chieh Ouyang : ON PETITION
Application No. 10/626,917 :
Filed: July 25, 2003 :
Title: MOTION ESTIMATION :
METHOD AND APPARATUS FOR VIDEO:
DATA COMPRESSION :

This is in response to the PETITION FOR REVIVAL OF AN APPLICATION FOR PATENT ABANDONED UNINTENTIONALLY UNDER 37 CFR 1.137(b) filed January 21, 2009 and filed again on January 23, 2009 and again on February 9, 2009.

The petition is **GRANTED**.

The above-identified application became abandoned for failure to pay the Issue Fee and Publication Fee within three months of the mailing date, September 25, 2007, of the Notice of Allowance and Fee(s) Due. This Office action set a three-month nonextendable statutory period for reply. The issue fee and publication fee were received in the Office on Thursday, December 27, 2007. Unfortunately, this was outside of the period for reply. Accordingly, the application became abandoned. A courtesy Notice of Abandonment was mailed on May 13, 2008.

For a grantable petition under 37 CFR 1.137(b), applicants must submit the required reply[1] in the form of payment of the Issue

[1] There was no distinct but concurrent requirement for corrected drawings.

Fee and Publication Fee; payment of the petition fee set forth in 37 CFR § 1.17(m); and a statement of unintentional delay. In this case, no terminal disclaimer is required.

On initial petition applicants paid the petition fee and included the required statement of unintentional delay. The petition was dismissed because it was only signed by co-inventor Sung and did not include proof that inventor Sung had the authority to prosecute this application without inventor Ouyang.

On request for reconsideration, applicants submitted a statement under 37 CFR 3.73(b). This statement noted where the assignment was recorded in the Office and stated that inventor Sung was authorized to sign on behalf of the assignee. It is noted that applicants also resubmitted the petition fee. This fee could not be processed. However, this is not relevant. The petition fee of $770 was paid on June 19, 2008. There was no need to submit another petition fee on request for reconsideration.

It is unclear whether any payments beyond $770 were charged in association with this petition, given the issues with the credit card deficiencies. If any overpayments were actually charged to the credit card then applicant should file a request for refund.

It is concluded that all requirements of 37 CFR 1.137(b) have been met.

The Office of Data Management has been advised of this decision. The application is, thereby, forwarded for processing into a patent.

Telephone inquiries specific to this matter should be directed to the undersigned at (571) 272-3219.

Nancy Johnson
Senior Petitions Attorney
Office of Petitions

UNITED STATES PATENT AND TRADEMARK OFFICE

Commissioner for Patents
United States Patent and Trademark Office
P.O. Box 1450
Alexandria, VA 22313-1450
www.uspto.gov

Paper No. 092204

SENNIGER POWER LEAVITT AND
ROEDEL
ONE METROPOLITAN SQUARE
16TH FLOOR
ST. LOUIS, MO 63102

SEP 28 2004

| | | |
|---|---|---|
| In re Application of: | : | |
| JERRY FENC | : | DECISION ON PETITION |
| Serial No.: 10/626,921 | : | TO MAKE SPECIAL |
| Filed: July 25, 2003 | : | |
| Attorney Docket No.: SMBT 5452 (93225-2) | : | |

This is a decision on the petition under 37 C.F.R. § 1.102(c), filed July 25, 2003, to make the above-identified application special.

Petitioner requests that the above-identified application be made special under the accelerated examination procedure set forth in the Manual of Patent Examining Procedure (M.P.E.P.) § 708.02, Section IV: Applicant's Age.

A grantable petition to make special under 37 C.F.R. § 1.102, and in accordance with M.P.E.P. § 708.02, Section IV, must include evidence showing that the applicant is sixty five (65) years of age or more. No fee is required for this petition.

The petition includes a declaration from the inventor, Jerry Fenc, stating that the he is sixty-five (65) years of age or more.

Accordingly, the petition is GRANTED.

After allowance, this application will be given priority for printing. See M.P.E.P. § 1309.

Inquiries regarding this decision should be directed to Lissi Marquis at (571) 272-1596.

Lissi Marquis, Special Programs Examiner
Technology Center 2800
Semiconductors, Electrical and Optical
Systems and Components

UNITED STATES PATENT AND TRADEMARK OFFICE

Commissioner for Patents
United States Patent and Trademark Office
P.O. Box 1450
Alexandria, VA 22313-1450
www.uspto.gov

SCHWEGMAN, LUNDBERG, WOESSNER & KLUTH, P.A.
P.O. BOX 2938
MINNEAPOLIS MN 55402-0938

COPY MAILED

MAY 24 2005

OFFICE OF PETITIONS

In re Application of :
Colleen Cooper :
Application No. 10/626,942 : ON PETITION
Filed: July 25, 2003 :
Title: Patient Management of Diabetes :
Treatment

This is a decision on the petition filed March 21, 2005, requesting in effect, the "Notice of Omitted Item(s) in a Nonprovisional Application" ("Notice") be withdrawn, and the above-identified application be accorded a filing date of July 25, 2003 including figure 2.

The application was filed on July 25, 2003. However, on February 28, 2005, the Office of Initial Patent Examination (OIPE) mailed a Notice stating that the application had been accorded a filing date of July 25, 2003 but figure 2 as described in the specification appeared to have been omitted.

In response, the present petition was filed wherein Petitioner contends figure 2 of the specification was filed on July 25, 2003. In support, the petition is accompanied by a copy of applicant's return postcard which lists " Formal Drawing(s) (2 sheets)". The petition is further accompanied by a copy of figure 2.

Applicant's postcard receipt is prima facie evidence that 2 sheets of drawings, including figure 2 were received on July 25, 2003, but figure 2 as described in the specification is not present in the file. Hence, it is clear that the papers for this application were mishandled by the Office. Therefore, it is concluded that figure 2 as described in the specification was received on July 25, 2005 as shown in counsel's file, and later misplaced in the office.

The petition is Granted. The $400.00 petition fee will be refunded to deposit account 19-0743.

Since the original drawings cannot be located in the Office,

substitute figure 2 supplied on March 21, 2005, will be used for processing and examination purposes.

The application will be returned to the Office of Initial Patent Examination for further processing with a **filing date of July 25, 2003**, using the drawings supplied on that date and the 1 sheet of drawing supplied on March 21, 2005.

Telephone inquiries related to this decision may be directed to the undersigned at (571) 272-3215.

Charlema R. Grant

Charlema R. Grant
Petition Attorney
Office of Petitions

## SPE RESPONSE FOR CERTIFICATE OF CORRECTION

Paper No.: _____

DATE : 10/22/08

TO SPE OF : ART UNIT 2833

SUBJECT : Request for Certificate of Correction for Appl. No.: 10626960 Patent No.: 7059907

Please respond to this request for a certificate of correction within 7 days.

**FOR IFW FILES:**

Please review the requested changes/corrections as shown in the **COCIN** document(s) in the IFW application image. No new matter should be introduced, nor should the scope or meaning of the claims be changed.

Please complete the response (see below) and forward the completed response to scanning using document code **COCX**.

**FOR PAPER FILES:**

Please review the requested changes/corrections as shown in the attached certificate of correction. Please complete this form (see below) and forward it with the file to:

**Certificates of Correction Branch (CofC)**
**South Tower - 9A22**
**Palm Location 7580**

DAVID IRVINE
**Certificates of Correction Branch**
**703-308-9390 ext. _____**

**Thank You For Your Assistance**

**The request for issuing the above-identified correction(s) is hereby:**
Note your decision on the appropriate box.

- [x] **Approved** — **All** changes apply.
- [ ] **Approved in Part** — Specify below which changes **do not** apply.
- [ ] **Denied** — State the reasons for denial below.

**Comments:** _____

/renee s luebke/
Renee Luebke — 2833

**SPE** — **Art Unit**

UNITED STATES PATENT AND TRADEMARK OFFICE

Commissioner for Patents
United States Patent and Trademark Office
P.O. Box 1450
Alexandria, VA 22313-1450
www.uspto.gov

MAILED

JAN 27 2010

OFFICE OF PETITIONS

JOEL M HARRIS
1027 SOLANA DRIVE
MOUNTAIN VIEW CA 94040

| | | |
|---|---|---|
| In re Application of | : | |
| Edward M. Knowlton | : | |
| Application No. 10/626,977 | : | ON PETITION |
| Filed: July 25, 2003 | : | |
| Attorney Docket No. 1000-008 | : | |

This is a decision on the petition to revive under 37 CFR 1.137(b), filed October 16, 2009.

The petition under 37 CFR 1.137(b) is **GRANTED**.

The above-identified application became abandoned for failure to timely file a reply in response to the Office action mailed March 17, 2009. This Office action set a shortened statutory period for reply of one (1) month. No reply having been received, the application became abandoned on April 18, 2009. The Office mailed a Notice of Abandonment on September 25, 2009.

With the instant petition, petitioner made the proper statement of unintentional delay, paid the petition fee, and submitted the required reply in the form of an Election.

The application is being forwarded to Group Art Unit 3686 for consideration of the Election, filed October 16, 2009.

Telephone inquiries related to this decision should be directed to the undersigned at (571)272-3207.

Cliff Congo
Petitions Attorney
Office of Petitions

UNITED STATES PATENT AND TRADEMARK OFFICE

Commissioner for Patents
United States Patent and Trademark Office
P.O. Box 1450
Alexandria, VA 22313-1450
www.uspto.gov

Colleen D. Szuch, Esq.
Honeywell International Inc.
101 Columbia Road
Morristown, NJ 07962-2245

COPY MAILED
DEC 0 1 2006
OFFICE OF PETITIONS

| | | |
|---|---|---|
| In re Application of | : | |
| Tung et al. | : | |
| Application No.: 10/626,997 | : | DECISION ON |
| Filing or 371(c) Date: 07/25/2003 | : | PETITION |
| Attorney Docket Number: H0005304 | : | |

This is a decision in response to the Petition to Revive an Unintentionally Abandoned Application, filed August 14, 2006. The petition requests withdrawal of the holding of abandonment, or alternatively revival of the application under 37 CFR 1.137(b). The petition is properly treated under 37 CFR 1.181 (no fee), and alternatively under 1.137(b).

This Petition under 37 CFR 1.181 is **dismissed**.

The petition under 37 CFR 1.137(b) is **granted**.

The above-identified application became abandoned for failure to timely and properly reply to the final Office action, mailed December 1, 2005. The Office action set a three (3) month period for reply. Extensions of time were available under 37 CFR 1.136(a).

The Office action was mailed to Applicant at the correspondence address of record, however, the Office action was returned to this office by the United States Postal Service ("USPS) on December 13, 2005.

Petition under 37 CFR 1.181

Applicant requests withdrawal of the holding of abandonment and in support of this request asserts that this Office erred by not informing Applicant that the Office action was returned to this Office by the USPS.

Applicable Law, Rules and MPEP

The MPEP 711.03(c)A, Petition To Withdraw Holding of Abandonment Based on Failure To Receive Office Action, provides

> In Delgar v. Schulyer, 172 USPQ 513 (D.D.C. 1971), the court decided that the Office should mail a new Notice of Allowance in view of the evidence presented

> in support of the contention that the applicant's representative did not receive the original Notice of Allowance. Under the reasoning of Delgar, an allegation that an Office action was never received may be considered in a petition to withdraw the holding of abandonment. If adequately supported, the Office may grant the petition to withdraw the holding of abandonment and remail the Office action. That is, the reasoning of Delgar is applicable regardless of whether an application is held abandoned for failure to timely pay the issue fee (35 U.S.C. 151) or for failure to prosecute (35 U.S.C. 133). To minimize costs and burdens to practitioners and the Office, the Office has modified the showing required to establish nonreceipt of an Office action. The showing required to establish nonreceipt of an Office communication must include a statement from the practitioner stating that the Office communication was not received by the practitioner and attesting to the fact that a search of the file jacket and docket records indicates that the Office communication was not received. A copy of the docket record where the nonreceived Office communication would have been entered had it been received and docketed must be attached to and referenced in practitioner's statement. For example, if a three month period for reply was set in the nonreceived Office action, a copy of the docket report showing all replies docketed for a date three months from the mail date of the nonreceived Office action must be submitted as documentary proof of nonreceipt of the Office action. The showing outlined above may not be sufficient if there are circumstances that point to a conclusion that the Office action may have been lost after receipt rather than a conclusion that the Office action was lost in the mail (e.g., if the practitioner has a history of not receiving Office actions). (Emphasis supplied)

MPEP 711.03(c)

Analysis

A review of the petition reveals that the correspondence address in the petition differs from the correspondence address of record. As such, it is unclear whether Applicant is in a position to attest on a personal knowledge basis as to whether the office action was received at the correspondence address of record. Also, the copy of the docket records filed with the petition do not indicate that the Notice of Abandonment was received. As such, there are circumstances that point to a conclusion that the Office action may have been lost after receipt rather than a conclusion that the Office action was lost in the mail.

Accordingly, the petition to withdraw the holding of abandonment is dismissed.

The petition to revive under 37 CFR 1.137(b)

In response to the Office action, Applicant has filed a Notice of Appeal, and a Brief in support of the Appeal, along with the appropriate fees. Accordingly, the petition is granted.

The petition fee has been charged to deposit account 50-1063 as authorized in the petition.

The application file does not indicate a change of address has been filed in this case, although the address given on the petition differs from the address of record. A change of address should be filed in this case in accordance with MPEP 601.03. A courtesy copy of this decision is being mailed to the address noted on the petition. However, until otherwise instructed, all future correspondence regarding this application will be mailed solely to the address of record.

The application is being referred to Technology Center Art Unit 1621 for processing of the Notice of Appeal and Appeal Brief in due course.

Telephone inquiries concerning this matter should be directed to the undersigned at (571) 272-3232.

Derek L. Woods
Attorney
Office of Petitions

CC: RICHARD S. ROBERTS
P.O. BOX 484
PRINCETON, NJ 08542

UNITED STATES PATENT AND TRADEMARK OFFICE

UNITED STATES DEPARTMENT OF COMMERCE
United States Patent and Trademark Office
Address: COMMISSIONER FOR PATENTS
P.O. Box 1450
Alexandria, Virginia 22313-1450
www.uspto.gov

Colleen D. Szuch, Esq.
Honeywell International Inc.
101 Columbia Road
Morristown, NJ 07962-2245

Mail Date: 04/21/2010

| | | |
|---|---|---|
| **Applicant** | : Hsueh Sung Tung | : DECISION ON REQUEST FOR |
| **Patent Number** | : 7592494 | : RECALCULATION of PATENT |
| **Issue Date** | : 09/22/2009 | : TERM ADJUSTMENT IN VIEW |
| **Appliction No** | : 10/626,997 | : OF WYETH AND NOTICE OF INTENT TO |
| **Filed** | : 07/25/2003 | : ISSUE CERTIFICATE OF CORRECTION |
| | | : |

The Request for Recalculation is **GRANTED** to the extent indicated.

The patent term adjustment has been determined to be **549** days. The USPTO will *sua sponte* issue a certificate of correction reflecting the amount of PTA days determined by the recalculation.

Prior to the issuance of the certificate of correction, the USPTO will afford patentee an opportunity to be heard and request reconsideration. Accordingly, patentee has **one month or thirty (30) days**, whichever is longer, to file a request for reconsideration of this patent term adjustment calculation. See 35 U.S.C. 154(b)(3)(B)(ii) and 37 CFR 1.322(a)(4). No extensions of time will be granted under 37 CFR 1.136.

Patentee should use document code PET.OP if electronically filing a request for reconsideration of this patent term adjustment calculation. The patentee must also include the information required by 37 CFR 1.705(b)(2) and the fee required by 37 CFR 1.18(e). If patentee does not file a timely request for reconsideration of this patent term adjustment calculation including the information required by 37 CFR 1.705(b)(2) and the fee required by 37 CFR 1.18(e), the USPTO will issue a certificate of correction reflecting the PTA determination noted above.

Patentee should be aware that in order to preserve the right to review in the United States District Court for the District of Columbia of the USPTO patent term adjustment determination, patentee must ensure that he or she also take the steps required under 35 U.S.C. 154(b)(4)(A) in a timely manner. Nothing in the request for recalculation should be construed as providing an alternative time frame for commencing a civil action under 35 U.S.C. 154(b)(4)(A).

Any questions concerning this decision should be directed to the Office of Patent Legal Administration at 571-272-7702.

UNITED STATES PATENT AND TRADEMARK OFFICE

Commissioner for Patents
United States Patent and Trademark Office
P.O. Box 1450
Alexandria, VA 22313-1450
www.uspto.gov

EXXON MOBIL UPSTREAM
RESEARCH COMPANY
P.O. BOX 2189
(CORP-URC-SW 359)
HOUSTON TX 77252-2189

COPY MAILED

SEP 1 1 2008

OFFICE OF PETITIONS

In re Application of :
Wilson :
Application No. 10/627,006 : DECISION
Filed: 25 July, 2003 :
Attorney Docket No. 2000.005 :

This is a decision on the petition filed on 29 January, 2008, to revive an application under 37 C.F.R. §1.137(b) as having been abandoned due to unintentional delay.

The Office regrets the delay in addressing this matter, however, the instant petition was presented to the attorneys in the Office of Petitions only at this writing.

The petition under 37 C.F.R. §1.137(b) is **GRANTED**.

The requirements of a grantable petition pursuant to 37 C.F.R. §1.137(b) are the petition and fee therefor, a reply, a proper statement of unintentional delay under the regulation, and, where applicable, a terminal disclaimer and fee. (However, it does not appear that a terminal disclaimer and fee are due here.)

## BACKGROUND

The record reflects that:

Petitioner failed to reply timely and properly to the Notice of Allowance/Allowability and Fees Due mailed on 30 August, 2007, with reply due under a non-extendable deadline on or before 30 November, 2007.

Petitioner's attempt on 28 November, 2007, to pay the Fees Due was negated by Petitioner's failure to have sufficient fees in the deposit account from which Petitioner had authorized such fees to be paid, and only the Publication Fee was charged at that time.

The application went abandoned by operation of law after midnight 30 November, 2007.

The Office mailed a Notice of Abandonment on 9 January, 2008.

On 29 January, 2008, Petitioner submitted the instant petition with fee, with a reply in the form of the balance of fees due, and made a statement of unintentional delay.

The availability of applications and application papers online to applicants/practitioners who diligently associate their Customer Number with the respective application(s) now provides an applicant/practitioner on-demand information as to events/transactions in an application.

Out of an abundance of caution, Petitioners always are reminded that those registered to practice *and* all others who make representations before the Office must inquire into the underlying facts of representations made to the Office and support averments with the appropriate documentation–since all owe to the Office the continuing duty to disclose.[1]

## STATUTES, REGULATIONS

Congress has authorized the Commissioner to "revive an application if the delay is shown to the satisfaction of the Commissioner to have been "unavoidable." 35 U.S.C. §133 (1994).

The regulations at 37 C.F.R. §1.137(a) and (b) set forth the requirements for a Petitioner to revive a previously unavoidably or unintentionally, respectively, abandoned application.[2],[3]

---

[1] See supplement of 17 June, 1999. The Patent and Trademark Office is relying on petitioner's duty of candor and good faith and accepting a statement made by Petitioner. See Changes to Patent Practice and Procedure, 62 Fed. Reg. at 53160 and 53178, 1203 Off. Gaz. Pat. Office at 88 and 103 (responses to comments 64 and 109)(applicant obligated under 37 C.F.R. §10.18 to inquire into the underlying facts and circumstances when providing statements to the Patent and Trademark Office). See specifically, the regulations at 37 C.F.R. §10.18.

[2] See: Changes to Patent Practice and Procedure; Final Rule Notice, 62 Fed. Reg. at 53158-59 (October 10, 1997), 1203 Off. Gaz. Pat. Office at 86-87 (October 21, 1997).

[3] The language of 35 U.S.C. §133 and 37 C.F.R. §1.137(a) is clear, unambiguous, and without qualification: the delay in tendering the reply to the outstanding Office action, as well as filing the first petition seeking revival, must have been unavoidable for the reply now to be accepted on petition. (Therefore, by example, an unavoidable delay in the payment of the Filing Fee might occur if a reply is shipped by the US Postal Service, but due to catastrophic accident, the delivery is not made.) Delays in responding properly raise the question whether delays are unavoidable. Where there is a question whether the delay was unavoidable, Petitioners must meet the burden of establishing that the delay was unavoidable within the meaning of 35 U.S.C. §133 and 37 C.F.R. §1.137(a) And the Petitioner must be diligent in attending to the matter. Failure to do so does not constitute the care required under Pratt, and so cannot satisfy the test for diligence and due care. (By contrast, unintentional delays are those that do not satisfy the very strict statutory and regulatory requirements of unavoidable delay, and also, by definition, are not intentional.))

## CONCLUSION

The instant petition under 37 C.F.R. §1.137(b) is **granted**.

The instant application is released to Publications Branch to be processed into a patent in due course.

Petitioner may find it beneficial to view Private PAIR within a fortnight of the instant decision to ensure that the revival has been acknowledged by the Publications Branch in response to this decision. It is noted that all inquiries with regard to that change in status need be directed to the Publications Branch where that change of status must be effected—that does not occur in the Office of Petitions.

While telephone inquiries regarding this decision may be directed to the undersigned at (571) 272-3214, it is noted that all practice before the Office is in writing (see: 37 C.F.R. §1.2[4]) and the proper authority for action on any matter in this regard are the statutes (35 U.S.C.), regulations (37 C.F.R.) and the commentary on policy (MPEP). Therefore, no telephone discussion may be controlling or considered authority for Petitioner's action(s).

/John J. Gillon, Jr./
John J. Gillon, Jr.
Senior Attorney
Office of Petitions

---

[4] The regulations at 37 C.F.R. §1.2 provide:
**§1.2 Business to be transacted in writing.**
All business with the Patent and Trademark Office should be transacted in writing. The personal attendance of applicants or their attorneys or agents at the Patent and Trademark Office is unnecessary. The action of the Patent and Trademark Office will be based exclusively on the written record in the Office. No attention will be paid to any alleged oral promise, stipulation, or understanding in relation to which there is disagreement or doubt.

UNITED STATES PATENT AND TRADEMARK OFFICE

UNITED STATES DEPARTMENT OF COMMERCE
United States Patent and Trademark Office
Address: COMMISSIONER FOR PATENTS
P.O. Box 1450
Alexandria, Virginia 22313-1450
www.uspto.gov

FREUDENBERG-NOK GENERAL PARTNERSHIP
LEGAL DEPARTMENT
47690 EAST ANCHOR COURT
PLYMOUTH, MI 48170-2455

Mail Date: 04/20/2010

| | | |
|---|---|---|
| **Applicant** | : Michael L. Crabtree | : DECISION ON REQUEST FOR |
| **Patent Number** | : 7588234 | : RECALCULATION of PATENT |
| **Issue Date** | : 09/15/2009 | : TERM ADJUSTMENT IN VIEW |
| **Appliction No** | : 10/627,034 | : OF WYETH AND NOTICE OF INTENT TO |
| **Filed** | : 07/24/2003 | : ISSUE CERTIFICATE OF CORRECTION |
| | | : |

The Request for Recalculation is **GRANTED** to the extent indicated.

The patent term adjustment has been determined to be **555** days. The USPTO will *sua sponte* issue a certificate of correction reflecting the amount of PTA days determined by the recalculation.

Prior to the issuance of the certificate of correction, the USPTO will afford patentee an opportunity to be heard and request reconsideration. Accordingly, patentee has **one month or thirty (30) days**, whichever is longer, to file a request for reconsideration of this patent term adjustment calculation. See 35 U.S.C. 154(b)(3)(B)(ii) and 37 CFR 1.322(a)(4). No extensions of time will be granted under 37 CFR 1.136.

Patentee should use document code PET.OP if electronically filing a request for reconsideration of this patent term adjustment calculation. The patentee must also include the information required by 37 CFR 1.705(b)(2) and the fee required by 37 CFR 1.18(e). If patentee does not file a timely request for reconsideration of this patent term adjustment calculation including the information required by 37 CFR 1.705(b)(2) and the fee required by 37 CFR 1.18(e), the USPTO will issue a certificate of correction reflecting the PTA determination noted above.

Patentee should be aware that in order to preserve the right to review in the United States District Court for the District of Columbia of the USPTO patent term adjustment determination, patentee must ensure that he or she also take the steps required under 35 U.S.C. 154(b)(4)(A) in a timely manner. Nothing in the request for recalculation should be construed as providing an alternative time frame for commencing a civil action under 35 U.S.C. 154(b)(4)(A).

Any questions concerning this decision should be directed to the Office of Patent Legal Administration at 571-272-7702.

UNITED STATES PATENT AND TRADEMARK OFFICE

Commissioner for Patents
United States Patent and Trademark Office
P.O. Box 1450
Alexandria, VA 22313-1450
www.uspto.gov

HARNESS DICKEY & PIERCE PLC
P O BOX 828
BLOOMFIELD HILLS, MI 48303

COPY MAILED

AUG 30 2005

OFFICE OF PETITIONS

| | |
|---|---|
| In re Application of | : |
| Fay M. Sommer et al | : |
| Application No. 10/627,041 | : DECISION GRANTING PETITION |
| Filed: July 25, 2003 | : UNDER 37 CFR 1.313(c)(2) |
| Attorney Docket No. 5898-000210 | : |

This is a decision on the petition, filed August 19, 2005, under 37 CFR 1.313(c)(2) to withdraw the above-identified application from issue after payment of the issue fee.

The petition is **GRANTED**.

The above-identified application is withdrawn from issue for consideration of a submission under 37 CFR 1.114 (request for continued examination). See 37 CFR 1.313(c)(2).

***Petitioner is advised that the issue fee paid in the above-identified application cannot be refunded. If, however, the above-identified application is again allowed, petitioner may request that it be applied towards the issue fee required by the new Notice of Allowance.***[1]

Telephone inquiries should be directed to the undersigned at (571) 272-3218.

This matter is being referred to Technology Center AU 2853 for processing of the request for continued examination under 37 CFR 1.114 and for consideration of the Information Disclosure Statement.

Frances Hicks

Frances Hicks
Petitions Examiner
Office of Petitions

---

[1] *The request to apply the issue fee to the new Notice may be satisfied by completing and returning the new Issue Fee Transmittal Form PTOL-85(b), which includes the following language thereon: "Commissioner for Patents is requested to apply the Issue Fee and Publication Fee (if any) or re-apply any previously paid issue fee to the application identified above." Petitioner is advised that, whether a fee is indicated as being due or not, the Issue Fee Transmittal Form* ***must*** *be completed and timely submitted to avoid abandonment. Note the language in bold text on the first page of the Notice of Allowance and Fee(s) Due (PTOL-85).*

UNITED STATES PATENT AND TRADEMARK OFFICE

Commissioner for Patents
United States Patent and Trademark Office
P.O. Box 1450
Alexandria, VA 22313-1450
www.uspto.gov

COPY MAILED
FEB 1 3 2006
OFFICE OF PETITIONS

HANLEY, FLIGHT
& ZIMMERMAN, LLC
20 N. WACKER DRIVE
SUITE 4220
CHICAGO, IL 60606

In re Application of

:

Yong Guen Lee

Application No. 10/627,057

: DECISION ON PETITION

Filed: July 25, 2003

:

Attorney Docket No. 20059/PIA30746

This is a decision on the petition under 37 CFR 1.137(a) filed January 30, 2006. The petition will be treated as a petition under 37 CFR 1.181(a) to withdraw the holding of abandonment

The petition is **granted**.

This application was held abandoned on October 1, 2005, after no reply was received to the final Office action mailed June 30, 2005. The notice set forth a shortened statutory period for reply of three months from its mailing date. A Notice of Abandonment was not mailed. The instant petition was filed on January 30, 2006. Petitioner maintains that the notice of September 30, 2005, was never received.

Section 711.03(c)(II) of the *Manual of Patent Examining Procedure* ("MPEP") provides that in order to establish non-receipt of an Office action so as prove that the imposition of a holding of abandonment is improper, petitioner must: 1) provide a statement to the Office indicating that the Office action was not received by petitioner; 2) include in the statement an attestation to the fact that a review of the file jacket and docket records maintained by petitioner indicates that the Office action was not received; and 3) provide a copy of the docket record where the non-received Office communication would have been entered had it been received and docketed. It is noted that the relevant docket records did not accompany the petition. Notwithstanding the aforementioned, a review of the application file reveals that the final Office action was mailed on June 30, 2005, but returned as undeliverable on July 21, 2005. There is no indication that the final Office action was mailed again. The evidence is convincing that the final Office action was not received. The petition is granted, accordingly.

The fee for the petition under 37 CFR 1.137(a) will be refunded, in due course.

The application file is being forwarded to Technology Center 2800, GAU 2822 for further processing.

Questions concerning this decision should be directed to the undersigned at (571) 272-3222.

Kenya A. McLaughlin

Kenya A. McLaughlin
Petitions Attorney
Office of Petitions

UNITED STATES PATENT AND TRADEMARK OFFICE

Commissioner for Patents
United States Patent and Trademark Office
P.O. Box 1450
Alexandria, VA 22313-1450
www.uspto.gov

**IAN C. McLEOD, P.C.**
**2190 COMMONS PARKWAY**
**OKEMOS MI 48864**

COPY MAILED
JAN 25 2010

| | | |
|---|---|---|
| In re Application of | : | |
| James R. Downing, et al. | : | |
| Application No. 10/627,066 | : | NOTICE |
| Filed: July 25, 2003 | : | |
| Attorney Docket No. HDI 4.1-1 | : | |

This is a notice regarding your request for acceptance of a fee deficiency submission under 37 CFR 1.28.

The Office no longer investigates or rejects original or reissue patent under 37 CFR 1.56. **1098 Off. Gaz. Pat. Office 502 (January 3, 1989)**. Therefore, nothing in this Notice is intended to imply that an investigation was done.

Your fee deficiency submission under 37 CFR 1.28 is hereby **ACCEPTED**.

This patent is no longer entitled to small entity status. Accordingly, all future fees paid in this patent must be paid at the large entity rate.

Inquiries related to this communication should be directed to Terri Johnson at (571) 272-2991.

Terri Johnson for

Chris Bottorff
Petitions Examiner
Office of Petitions

UNITED STATES PATENT AND TRADEMARK OFFICE

Commissioner for Patents
United States Patent and Trademark Office
P.O. Box 1450
Alexandria, VA 22313-1450
www.uspto.gov

NAVAL UNDERSEA WARFARE CENTER
DIVISION NEWPORT
1176 HOWELL STREET
CODE 000C
NEWPORT RI 02841

COPY MAILED

JUN 09 2008

OFFICE OF PETITIONS

ON PETITION

In re Application of
Anthony A. Ruffa
Application No. 10/627,105
Filed: July 24, 2003
Attorney Docket No. 79865

This is a decision on the petition to withdraw the holding of abandonment, filed April 14, 2008, which is treated under 37 CFR 1.181.

The petition to withdraw the holding of abandonment is **GRANTED**.

The application was held abandoned on October 15, 2007, for failure to file a timely response to the non-Final Office Action mailed July 12, 2007, which set a three (3) month shortened period for reply. No extensions of time in accordance with 37 CFR 1.136(a) were obtained. Accordingly, a Notice of Abandonment was mailed March 21, 2008.

Petitioner asserts that a proper response, was filed via facsimile transmission on October 11, 2007. In support, petitioner submits a copy of the reply said to have been filed, which includes a certificate of facsimile transmission pursuant to 37 CFR 1.8 and was acknowledged by the U.S. Patent and Trademark Office in an Auto-Reply Facsimile Transmission.

The evidence submitted corroborates a timely response to the non-Final Office Action. Accordingly, the holding of abandonment is withdrawn and the Notice of Abandonment is vacated. No petition fee Is due and none has been charged.

This matter is being referred to Technology Center 2874 for appropriate action on the amendment filed October 11, 2007, a copy of which was submitted April 14, 2008 with the instant petition.

Telephone inquiries concerning this matter should be directed to the undersigned Petitions Attorney at (571) 272-3212.

Patricia Faison-Ball

Patricia Faison-Ball
Senior Petitions Attorney
Office of Petitions

UNITED STATES PATENT AND TRADEMARK OFFICE

Commissioner for Patents
United States Patent and Trademark Office
P.O. Box 1450
Alexandria, VA 22313-1450
www.uspto.gov

**WILHELM LAW SERVICE, S.C.**
**100 W LAWRENCE ST**
**THIRD FLOOR**
**APPLETON WI 54911**

COPY MAILED

JAN 09 2007

OFFICE OF PETITIONS

| | | |
|---|---|---|
| In re Application of | : | |
| Paul, Kamaljit S. | : | |
| Application No. 10/627,137 | : | ON PETITION |
| Filed: July 24, 2003 | : | |
| Attorney Docket No. 29655-1 | : | |

This is a decision on the petition under 37 C.F.R. § 1.137(b), filed August 28, 2006, to revive the above-identified application.

The petition is **GRANTED.**

The petition satisfies the conditions for revival pursuant to the provisions of 37 CFR 1.137(b) in that (1) the reply in the form of an Amendment; (2) the petition fee; and (3) the required statement of unintentional delay have been received. Accordingly, the response has been accepted as having been unintentionally delayed.

This matter is being referred to Technology Center 3700 for further examination on the merits.

Telephone inquiries regarding this decision should be directed to the undersigned at (571) 272-3206.

Liana Walsh
Petitions Examiner
Office of Petitions

# UNITED STATES PATENT AND TRADEMARK OFFICE

UNITED STATES DEPARTMENT OF COMMERCE
United States Patent and Trademark Office
Address: COMMISSIONER FOR PATENTS
P.O. Box 1450
Alexandria, Virginia 22313-1450
www.uspto.gov

| APPLICATION NO. | FILING DATE | FIRST NAMED INVENTOR | ATTORNEY DOCKET NO. | CONFIRMATION NO. |
|---|---|---|---|---|
| 10/627,166 | 07/25/2003 | Charles E. Price | 946478.263692 | 2507 |

24239 7590 08/19/2009
MOORE & VAN ALLEN PLLC
P.O. BOX 13706
Research Triangle Park, NC 27709

| EXAMINER |
|---|
| MARCANTONI, PAUL D |

| ART UNIT | PAPER NUMBER |
|---|---|
| 1793 | |

| MAIL DATE | DELIVERY MODE |
|---|---|
| 08/19/2009 | PAPER |

**Please find below and/or attached an Office communication concerning this application or proceeding.**

The time period for reply, if any, is set in the attached communication.

UNITED STATES PATENT AND TRADEMARK OFFICE

Commissioner for Patents
United States Patent and Trademark Office
P.O. Box 1450
Alexandria, VA 22313-1450
www.uspto.gov

wk

Mailed : AUG 19 2009

In re Application of
Charles E. Price
Serial No. 10/627,166
Filed: July 25, 2003
For: Cementitious Compositions And Methods Of Making And Using

DECISION ON PETITION

This is a decision on Applicants' request filed July 28, 2009, that the dismissal of the Appeal and the holding of abandonment be withdrawn. Applicant's request is being considered as a petition request under 37 CFR 1.181 (no fee).

A review of the record indicates that Applicant timely filed the Notice of Appeal on November 24, 2008 and that Applicant's Appeal Brief was filed on June 24, 2009 with a five month extension of time

**DECISION**

The petition is **GRANTED**.

The Appeal is to be reinstated and the application returned to active status.

/Gregory L Mills/
Gregory L. Mills, Acting Director
Technology Center 1700
Chemical and Materials Engineering

Henry B. Ward, III
MOORE & VAN ALLEN PLLC
P.O. BOX 13706
Research Triangle Park NC 27709

UNITED STATES PATENT AND TRADEMARK OFFICE

UNITED STATES DEPARTMENT OF COMMERCE
United States Patent and Trademark Office
Address: COMMISSIONER FOR PATENTS
P.O. Box 1450
Alexandria, Virginia 22313-1450
www.uspto.gov

CESARI AND MCKENNA, LLP
88 BLACK FALCON AVENUE
BOSTON, MA 02210

Mail Date: 05/04/2010

| | | |
|---|---|---|
| **Applicant** | : Gary H. Newman | : DECISION ON REQUEST FOR |
| **Patent Number** | : 7657499 | : RECALCULATION of PATENT |
| **Issue Date** | : 02/02/2010 | : TERM ADJUSTMENT IN VIEW |
| **Application No** | : 10/627,191 | : OF WYETH AND NOTICE OF INTENT TO |
| **Filed** | : 07/25/2003 | : ISSUE CERTIFICATE OF CORRECTION |
| | | : |

The Request for Recalculation is **GRANTED** to the extent indicated.

The patent term adjustment has been determined to be **442** days. The USPTO will *sua sponte* issue a certificate of correction reflecting the amount of PTA days determined by the recalculation.

Prior to the issuance of the certificate of correction, the USPTO will afford patentee an opportunity to be heard and request reconsideration. Accordingly, patentee has **one month or thirty (30) days**, whichever is longer, to file a request for reconsideration of this patent term adjustment calculation. See 35 U.S.C. 154(b)(3)(B)(ii) and 37 CFR 1.322(a)(4). No extensions of time will be granted under 37 CFR 1.136.

Patentee should use document code PET.OP if electronically filing a request for reconsideration of this patent term adjustment calculation. The patentee must also include the information required by 37 CFR 1.705(b)(2) and the fee required by 37 CFR 1.18(e). If patentee does not file a timely request for reconsideration of this patent term adjustment calculation including the information required by 37 CFR 1.705(b)(2) and the fee required by 37 CFR 1.18(e), the USPTO will issue a certificate of correction reflecting the PTA determination noted above.

Patentee should be aware that in order to preserve the right to review in the United States District Court for the District of Columbia of the USPTO patent term adjustment determination, patentee must ensure that he or she also take the steps required under 35 U.S.C. 154(b)(4)(A) in a timely manner. Nothing in the request for recalculation should be construed as providing an alternative time frame for commencing a civil action under 35 U.S.C. 154(b)(4)(A).

Any questions concerning this decision should be directed to the Office of Patent Legal Administration at 571-272-7702.

UNITED STATES PATENT AND TRADEMARK OFFICE

COMMISSIONER FOR PATENTS
UNITED STATES PATENT AND TRADEMARK OFFICE
P.O. BOX 1450
ALEXANDRIA, VA 22313-1450
www.uspto.gov

PERKINS COIE LLP/AWS
P.O. BOX 1247
SEATTLE, WA 98111-1247

**COPY MAILED**

JAN 27 2005

**OFFICE OF PETITIONS**

In re Application of:
Wahlstrom et al.
Application No. 10/627,192
Filed: July 24, 2003
Title of Invention:
SYSTEM AND METHOD OF ASSIGNING PRIORITY TO REMOTE UNITS IN A COLLISION FREE MULTIPLE ACCESS PROTOCAL

DECISION GRANTING STATUS UNDER 37 CFR 1.47(a)

This decision is in response to the Petition Under 37 CFR 1.47(a), filed December 16, 2004, to allow the other inventor(s) to proceed with the application on behalf of himself or herself and the nonsigning inventor(s).

The petition is **granted**.

The above-identified application and papers have been reviewed and found in compliance with 37 CFR 1.47(a). This application is hereby accorded Rule 1.47(a) status.

Petitioner has shown that the non-signing inventor, Donald P. Wahlstrom, refuses to join in the application.

As provided in Rule 1.47(a), this Office will forward notice of this application's filing to the non-signing inventor at the addresses given in the Petition. Notice of the filing of this application will also be published in the Official Gazette.

The application file is being returned to the Office of Initial Patent Examination for continued processing.

Telephone inquiries related to this decision may be directed to the undersigned at (571) 272-3232.

Derek L. Woods
Attorney Advisor
Office of Petitions

UNITED STATES PATENT AND TRADEMARK OFFICE

COMMISSIONER FOR PATENTS
UNITED STATES PATENT AND TRADEMARK OFFICE
P.O. BOX 1450
ALEXANDRIA, VA 22313-1450
www.uspto.gov

MR. DONALD P. WAHLSTROM
16536-189TH AVENUE N.E.
WOODINVILLE, WA 98072

| | | |
|---|---|---|
| In re Application of: | : | |
| Wahlstrom et al. | : | |
| Application No. 10/627,192 | : | LETTER |
| Filed: July 24, 2003 | : | |
| Title of Invention: | : | |
| SYSTEM AND METHOD OF ASSIGNING | : | |
| PRIORITY TO REMOTE UNITS IN A | : | |
| COLLISION FREE MULTIPLE ACCESS | : | |
| PROTOCAL | : | |

COPY MAILED
JAN 27 2005
OFFICE OF PETITIONS

Dear Mr. Wahlstrom:

You are named as a joint inventor in the above-identified United States patent application filed under the provisions of 35 U.S.C. 116 (United States Code) and 37 CFR 1.47(a), Rules of Practice in Patent Cases. Should a patent be granted on the application you will be designated therein as a joint inventor.

As a named inventor you are entitled to inspect any paper in the file wrapper of the application, order copies of all or any part thereof (at a prepaid cost per 37 CFR 1.19) or make your position of record in the application. Alternatively, you may arrange to do any of the preceding through a registered patent attorney or agent presenting written authorization from you. If you care to join the application, counsel of record (see below) would presumably assist you. Joining in the application would entail the filing of an appropriate oath or declaration by you pursuant to 37 CFR 1.63.

Telephone inquiries regarding this communication should be directed to the undersigned at (571) 272-3232. Requests for information regarding your application should be directed to the File Information Unit at (703) 308-2733. Information regarding how to pay for and order a copy of the application, or a specific paper in the application, should be directed to Certification Division at (703) 308-9726 or 1-800-972-6382 (outside the Washington D.C. area).

Derek L. Woods
Attorney/Advisor
Office of Petitions

cc: PERKINS COIE LLP/AWS
P.O. BOX 1247
SEATTLE, WA 98111-1247

UNITED STATES PATENT AND TRADEMARK OFFICE

Commissioner for Patents
United States Patent and Trademark Office
P.O. Box 1450
Alexandria, VA 22313-1450
www.uspto.gov

COPY MAILED

MAR 02 2005

OFFICE OF PETITIONS

STRIKER, STRIKER & STENBY
103 East Neck Road
Huntington NY 11743

In re Application of
Odeskog et al.
Application No. 10/627,214
Deposited: July 25, 2003
Attorney Docket No. 2641
Title of Invention: METHOD OF OPERATING A COOLING AND HEATING CIRCUIT OF A MOTOR VEHICLE

DECISION GRANTING PETITION

This is a decision on the petition filed December 8, 2003 , requesting that the above-identified application be accorded a filing date of July 25, 2003.

The application was deposited on July 25, 2003. However, on November 12, 2003, the Office of Initial Patent Examination mailed a "Notice of Incomplete Nonprovisional Application" stating that a filing date had **not** been granted and requiring drawings as described in the specification. The "Notice" further stated that the filing date would be the date of receipt of the omitted drawings.

In response, on December 8, 2003, applicant filed the present petition and a copy of applicants' postcard receipt acknowledging receipt of 2 sheets of drawings on July 25, 2003. Additionally, applicant submitted a copy of one (1) sheet of drawings.

Applicant's postcard receipt is prima facie[1] evidence that drawings were received on July 25, 2003, but no drawings are present in the file. Hence, it is clear that the papers for this application were mishandled by the Office. Therefore, it is concluded that at least 2 sheets of drawings, were received on July 25, 2003, as shown in counsel's file, and later misplaced in the Office. It is noted that only one sheet of drawing was submitted with the petition.

The petition is Granted.

The application is being returned to the Office of Initial Patent Examination for further processing with a **filing date of July 25, 2003**, using the copy the drawing supplied on December 8, 2003.

Any inquiries related to this decision should be directed to the

---

[1]A postcard receipt which itemizes and properly identifies the items which are being filed serves as prima facie evidence of receipt in the office of all items listed thereon. See MPEP 503.

undersigned at (571) 272-3215.

Charlema R. Grant

Charlema R. Grant
Petitions Attorney
Office of Petitions

UNITED STATES PATENT AND TRADEMARK OFFICE

UNITED STATES DEPARTMENT OF COMMERCE
United States Patent and Trademark Office
Address: COMMISSIONER FOR PATENTS
P.O. Box 1450
Alexandria, Virginia 22313-1450
www.uspto.gov

Nicholas J. Seay
Quarles & Brady LLP
P.O. Box 2113
Madison, WI 53701-2113

Mail Date: 04/26/2010

| | | |
|---|---|---|
| **Applicant** | : James A. Thomson | : DECISION ON REQUEST FOR |
| **Patent Number** | : 7611852 | : RECALCULATION of PATENT |
| **Issue Date** | : 11/03/2009 | : TERM ADJUSTMENT IN VIEW |
| **Application No** | : 10/627,245 | : OF WYETH AND NOTICE OF INTENT TO |
| **Filed** | : 07/25/2003 | : ISSUE CERTIFICATE OF CORRECTION |
| | | : |

The Request for Recalculation is **GRANTED** to the extent indicated.

The patent term adjustment has been determined to be **362** days. The USPTO will *sua sponte* issue a certificate of correction reflecting the amount of PTA days determined by the recalculation.

Prior to the issuance of the certificate of correction, the USPTO will afford patentee an opportunity to be heard and request reconsideration. Accordingly, patentee has **one month or thirty (30) days**, whichever is longer, to file a request for reconsideration of this patent term adjustment calculation. See 35 U.S.C. 154(b)(3)(B)(ii) and 37 CFR 1.322(a)(4). No extensions of time will be granted under 37 CFR 1.136.

Patentee should use document code PET.OP if electronically filing a request for reconsideration of this patent term adjustment calculation. The patentee must also include the information required by 37 CFR 1.705(b)(2) and the fee required by 37 CFR 1.18(e). If patentee does not file a timely request for reconsideration of this patent term adjustment calculation including the information required by 37 CFR 1.705(b)(2) and the fee required by 37 CFR 1.18(e), the USPTO will issue a certificate of correction reflecting the PTA determination noted above.

Patentee should be aware that in order to preserve the right to review in the United States District Court for the District of Columbia of the USPTO patent term adjustment determination, patentee must ensure that he or she also take the steps required under 35 U.S.C. 154(b)(4)(A) in a timely manner. Nothing in the request for recalculation should be construed as providing an alternative time frame for commencing a civil action under 35 U.S.C. 154(b)(4)(A).

Any questions concerning this decision should be directed to the Office of Patent Legal Administration at 571-272-7702.

UNITED STATES PATENT AND TRADEMARK OFFICE

Commissioner for Patents
United States Patent and Trademark Office
P.O. Box 1450
Alexandria, VA 22313-1450
www.uspto.gov

SECOND SIGHT MEDICAL PRODUCTS, INC.
12744 SAN FERNANDO ROAD
BUILDING 3
SYLMAR, CA 91342

COPY MAILED
AUG 1 1 2006
OFFICE OF PETITIONS

In re Application of :
Greenberg, et al. :
Application No. 10/627,260 : ON PETITION
Filed: July 24, 2003 :
Attorney Docket No. S202-USA :

This is a decision on the petition under 37 CFR 1.137(b), filed May 2, 2006, to revive the above-identified application.

The petition is **GRANTED**.

The above-identified application became abandoned for failure to reply in a timely manner to the Notice to File Missing Parts of Application (Notice) mailed October 21, 2003. The Notice set a period for reply of two (2) months from the mail date of the Notice. No extensions of time under the provisions of 37 CFR 1.136(a) were obtained. Accordingly, the above-identified application became abandoned on December 22, 2003. A Notice of Abandonment was mailed on October 22, 2004.

It is not apparent whether the statement of unintentional delay was signed by a person who would have been in a position of knowing that the entire delay in filing the required reply from the due date for the reply until the filing of a grantable petition pursuant to 37 CFR 1.137(b) was unintentional. Nevertheless, in accordance with 37 CFR 10.18, the statement is accepted as constituting a certification of unintentional delay. However, in the event that petitioner has no knowledge that the delay was unintentional, petitioner must make such an inquiry to ascertain that, in fact, the delay was unintentional. If petitioner discovers that the delay was intentional, petitioner must so notify the Office.

The file is being forwarded to the Office of Initial Patent Examination for further processing.

Telephone inquiries concerning this matter may be directed to the undersigned at (571) 272-3228.

Edward J. Tannouse
Petitions Attorney
Office of Petitions/Patent
Office of the Deputy Commissioner
for Patent Examination Policy

UNITED STATES PATENT AND TRADEMARK OFFICE

Commissioner for Patents
United States Patent and Trademark Office
P.O. Box 1450
Alexandria, VA 22313-1450
www.uspto.gov

LAW OFFICE OF MICHAEL D. EISENBERG
INTELLECTUAL PROPERTY LAW
3263 CAMINITO EASTBLUFF, SUITE 198
LA JOLLA, CA 92037

COPY MAILED
OCT 28 2008
OFFICE OF PETITIONS

In re Application of :
William Thomas Rogers :
Application No. 10/627,286 : ON PETITION
Filed: July 24, 2003 :
Attorney Docket No. BRI-001 :

This is a decision on the petition under 37 CFR 1.137(b), filed April 10, 2008, April 28, 2008 and supplemented on August 15, 2008, to revive the above-identified application.

The application became abandoned for failure to timely file a proper response to the non-final Office action mailed March 23, 2006. A Notice of Abandonment was mailed on March 18, 2008.

The petition satisfies the requirements of 37 CFR 1.137(b) in that petitioner has supplied (1) the reply in the form of an amendment; (2) the petition fee of $770; and (3) a proper statement of unintentional delay. Therefore, the petition is **GRANTED**.

The Revocation of Power of Attorney with New Power of Attorney and Change of Correspondence Address filed on August 15, 2008 has been accepted and made of record. A Notice of Acceptance is enclosed with this decision.

This application file is being referred to Technology Center Art Unit 3735 for review of the amendment filed with the instant petition.

Telephone inquiries concerning this decision should be directed to the undersigned at (571) 272-3226.

Andrea Smith
Petitions Examiner
Office of Petitions

Enclosure: Notification of Acceptance of Power of Attorney

UNITED STATES PATENT AND TRADEMARK OFFICE

UNITED STATES DEPARTMENT OF COMMERCE
United States Patent and Trademark Office
Address: COMMISSIONER FOR PATENTS
P.O. Box 1450
Alexandria, Virginia 22313-1450
www.uspto.gov

| APPLICATION NUMBER | FILING OR 371(C) DATE | FIRST NAMED APPLICANT | ATTY. DOCKET NO./TITLE |
|---|---|---|---|
| 10/627,286 | 07/24/2003 | William Thomas Rogers | |

**CONFIRMATION NO. 2379**

**POA ACCEPTANCE LETTER**

45812
Law Office of MICHAEL D. EISENBERG
Intellectual Property Law
3263 CAMINITO EASTBLUFF, Suite 198
LA JOLLA, CA 92037

*OC000000032737065*

Date Mailed: 10/22/2008

## NOTICE OF ACCEPTANCE OF POWER OF ATTORNEY

This is in response to the Power of Attorney filed 08/15/2008.

The Power of Attorney in this application is accepted. Correspondence in this application will be mailed to the above address as provided by 37 CFR 1.33.

/amsmith/

---

Office of Data Management, Application Assistance Unit (571) 272-4000, or (571) 272-4200, or 1-888-786-0101

UNITED STATES PATENT AND TRADEMARK OFFICE

Commissioner for Patents
United States Patent and Trademark Office
P.O. Box 1450
Alexandria, VA 22313-1450
www.uspto.gov

**Marshall, Gerstein & Borun LLP**
**233 South Wacker Drive**
**6300 Sears Tower**
**Chicago, IL 60606-6357**

**COPY MAILED**

MAR 2 0 2009

**OFFICE OF PETITIONS**

| | | |
|---|---|---|
| In re Application of | : | |
| Raymond Lind | : | |
| Application No. 10/627,295 | : | DECISION ON PETITION |
| Filed: September 24, 2003 | : | TO WITHDRAW |
| Attorney Docket No. 30374/38076A | : | FROM RECORD |
| | : | |

This is a decision on the Request to Withdraw as attorney or agent of record under 37 C.F.R. § 1.36(b), filed December 11, 2008.

The request is **APPROVED**.

A grantable request to withdraw as attorney/agent of record must be signed by every attorney/agent seeking to withdraw or contain a clear indication that one attorney is signing on behalf of another/others. A request to withdraw will not be approved unless at least 30 (thirty) days would remain between the date of approval and the later of the expiration date of a time to file a response or the expiration date of the maximum time period which can be extended under 37 C.F.R. § 1.136(a).

The request was signed by David C. Read on behalf of all attorneys of record. All attorneys/agents have been withdrawn. Applicant is reminded that there is no attorney of record at this time.

All future correspondence will be directed to the first named inventor Raymond Lind at the address indicated below.

The application became abandoned for failure to timely respond to the Office action mailed July 24, 2008.

Telephone inquiries concerning this decision should be directed to Terri Williams at 571-272-2991.

Terri Williams

Terri Williams
Petitions Examiner
Office of Petitions

cc: **Raymond Lind**
**2217 W. Berwyn Avenue**
**Chicago, IL 60625**

UNITED STATES PATENT AND TRADEMARK OFFICE

UNITED STATES DEPARTMENT OF COMMERCE
United States Patent and Trademark Office
Address: COMMISSIONER FOR PATENTS
P.O. Box 1450
Alexandria, Virginia 22313-1450
www.uspto.gov

| APPLICATION NUMBER | FILING OR 371(C) DATE | FIRST NAMED APPLICANT | ATTY. DOCKET NO./TITLE |
|---|---|---|---|
| 10/627,295 | 07/24/2003 | Raymond Lind | 30374/38076A |

**CONFIRMATION NO. 2372**

**POWER OF ATTORNEY NOTICE**

4743
MARSHALL, GERSTEIN & BORUN LLP
233 SOUTH WACKER DRIVE
6300 SEARS TOWER
CHICAGO, IL 60606-6357

*OC000000035089742*

Date Mailed: 03/19/2009

## NOTICE REGARDING CHANGE OF POWER OF ATTORNEY

This is in response to the Power of Attorney filed 12/03/2008.

- The withdrawal as attorney in this application has been accepted. Future correspondence will be mailed to the new address of record. 37 CFR 1.33.

/tswilliams/

---

Office of Data Management, Application Assistance Unit (571) 272-4000, or (571) 272-4200, or 1-888-786-0101

## SPE RESPONSE FOR CERTIFICATE OF CORRECTION

Paper No.: _____

DATE : 05/01/09

TO SPE OF : ART UNIT 2452

SUBJECT : Request for Certificate of Correction for Appl. No.: 10627324 Patent No.: 7426570 B2

Please respond to this request for a certificate of correction within 7 days.

**FOR IFW FILES:**

Please review the requested changes/corrections as shown in the **COCIN** document(s) in the IFW application image. No new matter should be introduced, nor should the scope or meaning of the claims be changed.

Please complete the response (see below) and forward the completed response to scanning using document code **COCX**.

**FOR PAPER FILES:**

Please review the requested changes/corrections as shown in the attached certificate of correction. Please complete this form (see below) and forward it with the file to:

**Certificates of Correction Branch (CofC)**
**South Tower - 9A22**
**Palm Location 7580**

**You can fax the Directors/SPE response to 571-270-9990**

*LAMONTE NEWSOME*
**Certificates of Correction Branch**
**703-308-9390 ext. 112**

**Thank You For Your Assistance**

**The request for issuing the above-identified correction(s) is hereby:**
Note your decision on the appropriate box.

- ☒ **Approved** — **All** changes apply.
- ☐ **Approved in Part** — Specify below which changes **do not** apply.
- ☐ **Denied** — State the reasons for denial below.

**Comments:** _____

JOHN FOLLANSBEE
SUPERVISORY PATENT EXAMINER
TECHNOLOGY CENTER 2100

6/1/09 2452

SPE RESPONSE FOR CERTIFICATE OF CORRECTION

SPE

Art Unit



PAGE 2/2 * RCVD AT 6/2/2009 5:37:25 PM [Eastern Daylight Time] * SVR:USPTO-EFXRF-6/39 * DNIS:2709990 * CSID: * DURATION (mm-ss):01-16

UNITED STATES PATENT AND TRADEMARK OFFICE

Commissioner for Patents
United States Patent and Trademark Office
P.O. Box 1450
Alexandria, VA 22313-1450
www.uspto.gov

**PATTERSON & SHERIDAN, LLP**
**3040 POST OAK BOULEVARD, SUITE 1500**
**HOUSTON TX 77056**

**COPY MAILED**

JAN 18 2007

**OFFICE OF PETITIONS**

In re Application of
Yang et al.
Application No. 10/627,336
Filed: July 24, 2003
Attorney Docket No. 007669/P3/CMP/ECP

: DECISION GRANTING PETITION
: UNDER 37 CFR 1.78(a)(3) AND
: UNDER 37 CFR 1.78(a)(6)

This is a decision on the petitions under 37 CFR §§ 1.78(a)(3) and 1.78(a)(6), filed November 7, 2006, to accept an unintentionally delayed claim under 35 U.S.C. §§120 and 119(e) for the benefit of the prior-filed applications set forth in the concurrently filed amendment.

The petitions are **GRANTED**.

A petition for acceptance of a claim for late priority under 37 CFR §§ 1.78(a)(3) and 1.78(a)(6) is only applicable to those applications filed on or after November 29, 2000. Further, the petition is appropriate only after the expiration of the period specified in 37 CFR §§ 1.78(a)(2)(ii) and 1.78(a)(5)(ii). In addition, the petition under 37 CFR §§ 1.78(a)(3) and 1.78(a)(6) must be accompanied by:

(1) the reference required by 35 U.S.C. §§ 120 and 119(e) and 37 CFR §§ 1.78(a)(2)(i) and 1.78(a)(5)(i) of the prior-filed application, unless previously submitted;
(2) the surcharge set forth in § 1.17(t); and
(3) a statement that the entire delay between the date the claim was due under 37 CFR §§ 1.78(a)(2)(ii) and 1.78(a)(5)(ii) and the date the claim was filed was unintentional. The Commissioner may require additional where there is a question whether the delay was unintentional.

The instant application was filed on July 24, 2003 and was pending at the time of filing of the instant petition. A reference to the prior-filed applications has been included in an amendment to the first sentence of the specification following the title, as required by 37 CFR §§ 1.78(a)(2)(iii) and 1.78(a)(5)(iii).

The instant nonprovisional application was filed after November 29, 2000, and the claim for priority herein is submitted after expiration of the period specified in 37 CFR §§ 1.78(a)(2)(ii) and 1.78(a)(5)(ii). *See* 35 U.S.C. § 120 and § 119(e). Accordingly, having found that the instant petition satisfies the conditions of 37 CFR §§ 1.78(a)(3) and 1.78(a)(6) for acceptance of an unintentionally delayed claim for priority under 35 U.S.C. § 120 and § 119(e), the petition to accept an unintentionally delayed claim of benefit to the prior-filed applications is granted.

***The granting of the petition to accept the delayed benefit claim to the prior-filed applications under 37 CFR §§ 1.78(a)(3) and 1.78(a)(6) should not be construed as meaning that the instant application is entitled to the benefit of the filing date of the prior-filed applications. In order for the instant application to be entitled to the benefit of the prior-filed applications, all other requirements under 35 U.S.C. §120 and 1.78(a)(1) and (a)(2) and under 35 U.S.C. §119(e) and 37 CFR 1.78(a)(4) and (a)(5) must be met. Similarly, the fact that the corrected Filing Receipt accompanying this decision on petition includes the prior-filed applications should not be construed as meaning that applicant is entitled to the claim for benefit of priority to the prior-filed applications noted thereon. Accordingly, the examiner will, in due course, consider this benefit claim and determine whether the instant application is entitled to the benefit of the earlier filing date.***

A corrected Filing Receipt, which includes the priority claim to the prior-filed applications, accompanies this decision on petition.

Any questions concerning this matter may be directed to the undersigned at (571) 272-3206.

This matter is being referred to Technology Center Art Unit 1742 for appropriate action on the amendment submitted November 7, 2006, including consideration by the examiner of the claim under 35 U.S.C. § 120 and 37 CFR 1.78(a)(2) for the benefit of the prior-filed applications, and for consideration of the claim under 35 U.S.C. §119(e) and 37 CFR 1.78(a)(5) for the benefit of the prior-filed provisional application.

Liana Walsh
Petitions Examiner
Office of Petitions

**ATTACHMENT**: Corrected Filing Receipt

UNITED STATES PATENT AND TRADEMARK OFFICE

UNITED STATES DEPARTMENT OF COMMERCE
United States Patent and Trademark Office
Address: COMMISSIONER FOR PATENTS
P.O. Box 1450
Alexandria, Virginia 22313-1450
www.uspto.gov

| APPL NO. | FILING OR 371 (c) DATE | ART UNIT | FIL FEE REC'D | ATTY.DOCKET NO | DRAWINGS | TOT CLMS | IND CLMS |
|---|---|---|---|---|---|---|---|
| 10/627,336 | 07/24/2003 | 1742 | 1234 | 007669/P3/CMP/ECP | 5 | 23 | 3 |

**CONFIRMATION NO. 2292**

**CORRECTED FILING RECEIPT**

*OC000000022031194*

*OC000000022031194*

44257
PATTERSON & SHERIDAN, LLP
3040 POST OAK BOULEVARD, SUITE 1500
HOUSTON, TX 77056

Date Mailed: 01/18/2007

Receipt is acknowledged of this regular Patent Application. It will be considered in its order and you will be notified as to the results of the examination. Be sure to provide the U.S. APPLICATION NUMBER, FILING DATE, NAME OF APPLICANT, and TITLE OF INVENTION when inquiring about this application. Fees transmitted by check or draft are subject to collection. Please verify the accuracy of the data presented on this receipt. **If an error is noted on this Filing Receipt, please mail to the Commissioner for Patents P.O. Box 1450 Alexandria Va 22313-1450. Please provide a copy of this Filing Receipt with the changes noted thereon. If you received a "Notice to File Missing Parts" for this application, please submit any corrections to this Filing Receipt with your reply to the Notice. When the USPTO processes the reply to the Notice, the USPTO will generate another Filing Receipt incorporating the requested corrections (if appropriate).**

**Applicant(s)**

Michael X. Yang, Palo Alto, CA;
Dmitry Lubomirsky, Cupertino, CA;
Yezdi N. Dordi, Palo Alto, CA;
Saravjeet Singh, Santa Clara, CA;
Sheshraj L. Tulshibagwale, Los Altos, CA;
Nicolay Y. Kovarsky, Sunnyvale, CA;

**Assignment For Published Patent Application**

APPLIED MATERIALS, INC.

**Power of Attorney:**

Robert Mulcahy--25436
Peter Sgarbossa--25610
Keith Tackett--32008
Donald Verplancken--33217
William Patterson--34102
Raymond Moser Jr--34682
James Wilson--35412
Raymond Kwong--37165
Joseph Bach--37771
Barden Patterson--37906

**Domestic Priority data as claimed by applicant**

This application is a CIP of 10/268,284 10/09/2002
which claims benefit of 60/398,345 07/24/2002
This application 10/627,336
is a CIP of 10/616,044 07/08/2003 PAT 7,128,823
which is a CIP of 10/268,284 10/09/2002
which claims benefit of 60/398,345 07/24/2002

**Foreign Applications**

**If Required, Foreign Filing License Granted:** 12/02/2003

**The country code and number of your priority application, to be used for filing abroad under the Paris Convention, is US10/627,336**

**Projected Publication Date:** Not Applicable

**Non-Publication Request:** No

**Early Publication Request:** No

**Title**

Electrochemical processing cell

**Preliminary Class**

204

## PROTECTING YOUR INVENTION OUTSIDE THE UNITED STATES

Since the rights granted by a U.S. patent extend only throughout the territory of the United States and have no effect in a foreign country, an inventor who wishes patent protection in another country must apply for a patent in a specific country or in regional patent offices. Applicants may wish to consider the filing of an international application under the Patent Cooperation Treaty (PCT). An international (PCT) application generally has the same effect as a regular national patent application in each PCT-member country. The PCT process **simplifies** the filing of patent applications on the same invention in member countries, but **does not result** in a grant of "an international patent" and does not eliminate the need of applicants to file additional documents and fees in countries where patent protection is desired.

Almost every country has its own patent law, and a person desiring a patent in a particular country must make an application for patent in that country in accordance with its particular laws. Since the laws of many countries differ in various respects from the patent law of the United States, applicants are advised to seek guidance from specific foreign countries to ensure that patent rights are not lost prematurely.

Applicants also are advised that in the case of inventions made in the United States, the Director of the USPTO must issue a license before applicants can apply for a patent in a foreign country. The filing of a U.S. patent application serves as a request for a foreign filing license. The application's filing receipt contains further information and guidance as to the status of applicant's license for foreign filing.

Applicants may wish to consult the USPTO booklet, "General Information Concerning Patents" (specifically, the section entitled "Treaties and Foreign Patents") for more information on timeframes and deadlines for filing foreign patent applications. The guide is available either by contacting the USPTO Contact Center at 800-786-9199, or it can be viewed on the USPTO website at http://www.uspto.gov/web/offices/pac/doc/general/index.html.

For information on preventing theft of your intellectual property (patents, trademarks and copyrights), you may wish to consult the U.S. Government website, http://www.stopfakes.gov. Part of a Department of Commerce initiative, this website includes self-help "toolkits" giving innovators guidance on how to protect intellectual property in specific countries such as China, Korea and Mexico. For questions regarding patent enforcement issues, applicants may call the U.S. Government hotline at 1-866-999-HALT (1-866-999-4158).

---

## LICENSE FOR FOREIGN FILING UNDER

# Title 35, United States Code, Section 184
# Title 37, Code of Federal Regulations, 5.11 & 5.15

**GRANTED**

The applicant has been granted a license under 35 U.S.C. 184, if the phrase "IF REQUIRED, FOREIGN FILING LICENSE GRANTED" followed by a date appears on this form. Such licenses are issued in all applications where the conditions for issuance of a license have been met, regardless of whether or not a license may be required as set forth in 37 CFR 5.15. The scope and limitations of this license are set forth in 37 CFR 5.15(a) unless an earlier license has been issued under 37 CFR 5.15(b). The license is subject to revocation upon written notification. The date indicated is the effective date of the license, unless an earlier license of similar scope has been granted under 37 CFR 5.13 or 5.14.

This license is to be retained by the licensee and may be used at any time on or after the effective date thereof unless it is revoked. This license is automatically transferred to any related applications(s) filed under 37 CFR 1.53(d). This license is not retroactive.

The grant of a license does not in any way lessen the responsibility of a licensee for the security of the subject matter as imposed by any Government contract or the provisions of existing laws relating to espionage and the national security or the export of technical data. Licensees should apprise themselves of current regulations especially with respect to certain countries, of other agencies, particularly the Office of Defense Trade Controls, Department of State (with respect to Arms, Munitions and Implements of War (22 CFR 121-128)); the Bureau of Industry and Security, Department of Commerce (15 CFR parts 730-774); the Office of Foreign Assets Control, Department of Treasury (31 CFR Parts 500+) and the Department of Energy.

**NOT GRANTED**

No license under 35 U.S.C. 184 has been granted at this time, if the phrase "IF REQUIRED, FOREIGN FILING LICENSE GRANTED" DOES NOT appear on this form. Applicant may still petition for a license under 37 CFR 5.12, if a license is desired before the expiration of 6 months from the filing date of the application. If 6 months has lapsed from the filing date of this application and the licensee has not received any indication of a secrecy order under 35 U.S.C. 181, the licensee may foreign file the application pursuant to 37 CFR 5.15(b).

UNITED STATES PATENT AND TRADEMARK OFFICE

1743

COMMISSIONER FOR PATENTS
UNITED STATES PATENT AND TRADEMARK OFFICE
P.O. BOX 1450
ALEXANDRIA, VA 22313-1450
www.uspto.gov

GEORGE R. NIMMER
PO BOX 252
OMAHA NE 68101-0252

COPY MAILED

FEB 2 6 2004

OFFICE OF PETITIONS

In re Application of
Douglas Barry et al.
Application No. 10/627,342
Filed: July 25, 2003
Title of Invention: TRANSFER AND POSITIONING APPARATUS FOR AUTOMATED CONVEYOR SYSTEM

DECISION REFUSING STATUS UNDER 37 CFR 1.47(a)

This is in response to the petition filed under 37 CFR 1.47(a) on December 22, 2003.

The petition is **DISMISSED**.

Rule 47 applicant is given TWO MONTHS from the mailing date of this decision to respond, correcting the below-noted deficiencies. Any response should be entitled "Request for Reconsideration of Petition Under 37 CFR 1.47(a). and may include an oath or declaration executed by the inventor. **Failure to respond will result in abandonment of the application**. Any extensions of time will be governed by 37 CFR 1.136(a).

The above-identified application was filed on July 25, 2003 naming Douglas Barry, Thomas L. Bybee, Adrian Chan, John Fuller, Ray Puseman, Greg Rothman, Don R. Simms, Michael Turner, Jay Woods and Inna M. Zevakina as joint inventors, but without a signed declaration.

Accordingly, on September 22, 2003, a "Notice To File Missing Parts of Application" was mailed, requiring *inter alia* a properly executed oath or declaration.

In response, on October 21, 2003, the present petition was filed with a declaration signed only by joint inventors Barry, Chan, Fuller, Puseman, Rothman, Simms, Turner, Woods and Zevakina. Petitioners assert that the Declaration and Assignment were sent to joint inventor Bybee. Evidence submitted with the petition in the form of that a registered mail return receipt signed by Betty Bybee at the last known address for Mr. Bybee, bears proof that the declaration and assignment papers had been delivered to/received by Mr. Bybee. Petitioners seek status under 37 CFR 1.47(a) claiming that thus by his actions, Mr. Bybee refuses to cooperate with the filing of the instant application.

A grantable petition under 37 CFR 1.47(a) requires: (1) proof that the non-signing inventor cannot be reached or refuses to sign the oath or declaration after having been presented with the application papers (specification, claims and drawings); (2) an acceptable oath or declaration in compliance with 35 U.S.C. §§ 115 and 116; (3) the petition fee; and (4) a statement of the last known address of the non-signing inventor. Applicant lacks items (1) set forth above.

In regards to item (1), petitioners have not provided sufficient proof that a copy of the complete application (specification, including claims, drawings, if any, and the declaration) was sent to the non-signing inventor.

The evidence submitted suggests that only the declaration and the assignment were sent to Mr. Bybee for his signature. papers were sent to the non-signing inventor.

The evidence presented does not bear proof that Mr. Bybee has had the opportunity to review the application.

Petitioners may show proof that a copy of the application was sent or given to the non-signing inventor for review by providing a copy of the cover letter transmitting the application papers to the non-signing inventor or details given in an affidavit or declaration of facts by a person having first hand knowledge of the details.

Likewise, before a *bona fide* refusal can be shown, the non-signing inventor must have been given an opportunity to review the application. Therefore, petitioners must show proof that the non-signing inventor refuses to sign the declaration after being sent or given a copy of the application papers. If there is a written refusal, petitioners should submit a copy of that refusal with any renewed petition. If the refusal was made orally to a person, then that person must provide details of the refusal in an affidavit or declaration of facts.

Further correspondence with respect to this matter should be addressed as follows:

By mail: Mail Stop Petition
Commissioner for Patents
P.O. Box 1450
Alexandria, VA 22313-1450

By FAX: (703) 872-9306

Telephone inquiries concerning this matter may be directed to the undersigned Petitions Attorney at (703)305-4497.

Patricia Faison-Ball

Patricia Faison-Ball
Senior Petitions Attorney
Office of Petitions

UNITED STATES PATENT AND TRADEMARK OFFICE

Commissioner for Patents
United States Patent and Trademark Office
P.O. Box 1450
Alexandria, VA 22313-1450
www.uspto.gov

GEORGE R. NIMMER
PO BOX 252
OMAHA NE 68101-0252

COPY MAILED

JUN 2 2 2004

OFFICE OF PETITIONS

In re Application of
Douglas Barry et al.
Application No. 10/627,342
Filed: July 25, 2003
Title of Invention: TRANSFER AND POSITIONING APPARATUS FOR AUTOMATED CONVEYOR SYSTEM

: DECISION ACCORDING STATUS
: UNDER 37 CFR 1.47(a)

This is in response to the renewed petition filed June 1, 2004, under 37 CFR 1.47(a).[1]

The petition is **GRANTED**.

Petitioners have shown that the non-signing inventor, Thomas L. Bybee, refuses to join in the filing of the above-identified application after having been sent a copy of the application papers. Specifically, the statement of George R. Nimmer. Attorney of Record, copies of the letter sent to Mr. Bybee with the copies of the complete application and proof that Mr. Bybee is in receipt of the application materials, establishes that Mr. Bybee has been given an opportunity to join in the filing of the above identified application. Mr. Bybee's failure to return an executed oath or declaration is tantamount to a refusal to cooperate with the filing of the application.

The above-identified application and papers have been reviewed and found in compliance with 37 CFR 1.47(a). This application is hereby accorded Rule 1.47(a) status.

As provided in Rule 1.47( c), this Office will forward notice of this application's filing to the non-signing inventor at the address given in the declaration. Notice of the filing of this application will also be published in the Official Gazette.

The application is being forwarded to Technology Center 1743 for examination in due course.

Telephone inquiries concerning this matter should be directed to the undersigned Petitions Attorney at (703) 305-4497.

Patricia Faison-Ball

Patricia Faison-Ball
Senior Petitions Attorney
Office of Petitions

[1]A petition filed December 22, 2003 was dismissed in a decision mailed February 26, 2004. The instant renewed petition is filed with a one month extension of time request and a certificate of mail dated May 25, 2004.

UNITED STATES PATENT AND TRADEMARK OFFICE

Commissioner for Patents
United States Patent and Trademark Office
P.O. Box 1450
Alexandria, VA 22313-1450
www.uspto.gov

THOMAS L. BYBEE
10285 GRAND AVENUE
OMAHA, NE 68134

In re Application of
Douglas Barry et al.
Application No. 10/627,342
Filed: July 25, 2003
Title of Invention:
TRANSFER AND POSITIONING APPARATUS FOR AUTOMATED CONVEYOR SYSTEM

COPY MAILED
JUN 22 2004
OFFICE OF PETITIONS

Dear Mr. Bybee:

You are named as a joint inventor in the above identified United States patent application, filed under the provisions of 35 U.S.C. 116 (United States Code), and 37 CFR 1.47(a), Rules of Practice in Patent Cases. Should a patent be granted on the application you will be designated therein as a joint inventor.

As a named inventor you are entitled to inspect any paper in the file wrapper of the application, order copies of all or any part thereof (at a prepaid cost per 37 CFR 1.19) or make your position of record in the application. Alternatively, you may arrange to do any of the preceding through a registered patent attorney or agent presenting written authorization from you. If you care to join the application, counsel of record (see below) would presumably assist you. Joining in the application would entail the filing of an appropriate oath or declaration by you pursuant to 37 CFR 1.63.

Telephone inquiries regarding this communication should be directed to the undersigned Petitions Attorney at (703) 305-4497. Requests for information regarding your application should be directed to the File Information Unit at 703/308-2733. Information regarding how to pay for and order a copy of the application, or a specific paper in the application, should be directed to Certification Division at 703/308-9726 or 1-800-972-6382 (outside the Washington D.C. area).

Patricia Faison-Ball
Senior Petitions Attorney
Office of Petitions

cc:
GEORGE R. NIMMER
PO BOX 252
OMAHA NE 68101-0252