UNITED STATES PATENT AND TRADEMARK OFFICE

Commissioner for Patents
United States Patent and Trademark Office
P.O. Box 1450
Alexandria, VA 22313-1450
www.uspto.gov

HUNTON & WILLIAMS LLP
INTELLECTUAL PROPERTY DEPARTMENT
1900 K STREET, N.W.
SUITE 1200
WASHINGTON DC 20006-1109

COPY MAILED

NOV 1 8 2004

OFFICE OF PETITIONS

In re Application of :
Moore :
Application No. 10/642,309 : ON PETITION
Filed: August 18, 2003 :
Attorney Docket No. 56162.000416 :

This is a decision in response to the paper filed August 18, 2004, which is being treated as a petition under 37 CFR 1.182 requesting entry of Figures 9 and 10 submitted on August 18, 2004.

The petition is **dismissed**.

On August 18, 2003, the instant application was filed without Figures 9 and 10. A Notice was mailed on June 18, 2004. It stated that a filing date of August 18, 2003, had been accorded, that Figures 9 and 10 were missing, and it gave petitioner three options:

(1) File a petition, petition fee, and evidence establishing that the missing Figures were filed as part of the application submitted to the PTO.
(2) File a petition, petition fee, the drawings, and request a filing date as of the date that the petition and missing Figure(s) are submitted.
(3) Accept the application as deposited.

Petitioner apparently has chosen option (3).

The petition does not state that the drawing submitted on August 18, 2004, was present at the time the original application was submitted. Petitioner does not request a filing date of Aguust 18, 2004 (the date the drawing with Figures 9 and 10was supplied). Instead, petitioner simply seeks to amend the application to include Figures 9 and 10 of the drawings. However, no petition is necessary for that purpose. New drawings may be entered by an examiner without petition so long as the new drawings contain no new matter. See MPEP 608.02(a). Accordingly, the petition is inappropriate and is subject to dismissal.

The drawing filed with the petition are withdrawn and will not be entered or used during the prosecution of this application. However, petitioner may resubmit the drawing as part of a preliminary amendment and such an amendment will be considered by the examiner for entry of new matter not described in the application as filed.

The original application papers will include only those application papers present on the date of deposit.

Since the present petition was not necessitated by any error on the part of the Office, the $130.00 petition fee will not be refunded.

The Office of Initial Patent Examination will be informed of the instant decision and will further process the application with a filing date of August 18, 2003, using only the application papers filed on August 18, 2003.

Telephone inquiries should be directed to Petitions Attorney Steven Brantley at (703) 306-5683.

Charles Steven Brantley
Senior Petitions Attorney
Office of Petitions

UNITED STATES PATENT AND TRADEMARK OFFICE

Commissioner for Patents
United States Patent and Trademark Office
P.O. Box 1450
Alexandria, VA 22313-1450
www.uspto.gov

Paper No.

THOMAS, KAYDEN, HORSTEMEYER & RISLEY, LLP
600 GALLERIA PARKWAY, S.E.
STE 1500
ATLANTA GA 30339-5994

COPY MAILED
JAN 29 2010

In re Application of	:	
Moore	:	
Application No. 10/642,309	:	DECISION ON PETITION
Filed: August 18, 2003	:	PURSUANT TO
Attorney Docket No. 60707-1330	:	37 C.F.R. § 1.47(B)
Title: OPERATING SYSTEM FOR	:	
EXECUTING COMPUTER SOFTWARE	:	
APPLICATIONS	:	

This is in response to the petition pursuant to 37 C.F.R. § 1.47(b), filed November 23, 2009.

This petition is **DISMISSED**.

On August 18, 2003 this application was filed with an unexecuted declaration, identifying Mark Justin Moore as the sole inventor. On August 18, 2004, an executed declaration was submitted, along with the surcharge associated with the late submission of the same. In a final Office action mailed on December 12, 2007, a non-final Office action mailed on July 2, 2008, and a final Office action mailed on January 21, 2009, the Examiner objected to the declaration.

A grantable petition under 37 C.F.R. § 1.47(b) requires:

(1) the petition fee of as set forth in 37 C.F.R. § 1.17(g);
(2) the surcharge as set forth in 37 C.F.R. § 1.16(e), if the petition is not filed at the time of filing the application;
(3) a statement of the last known address of the non-signing inventor;

(4) proof that either:
    (a) a copy of the application was sent or given to the non-signing inventor for review and proof that the non-signing inventor refused to sign, or;
    (b) proof that diligent efforts have been made to locate the non-signing inventor
(5) proof that the Rule 47(b) applicant has sufficient proprietary interest in the subject matter to justify the filing of the application;
(6) proof of irreparable damage, and;
(7) an acceptable oath or declaration in compliance with 35 U.S.C. §§ 115 and 116 and 37 C.F.R. § 1.63.

With this petition, Petitioner has submitted, *inter alia*, the petition fee, a statement of facts, an assertion that the non-singing inventor cannot be found,[1] and the last known address of the non-signing inventor.[2]

Requirements (1) - (3) of Rule 1.47(b) have been satisfied. Requirements (4) - (7) have not been satisfied.

Regarding the fourth requirement of Rule 1.47(b), Petitioner has indicated that he has inquired with the non-signing inventor's former co-workers,[3] performed "multiple Internet searches" for this individual,[4] and neither these communications nor these searches were successful in locating this individual.[5] *As Petitioner has set forth that the non-signing inventor cannot be found or reached, Petitioner is required to establish that a diligent effort was made to locate this individual.* However the cursory searches that were performed for the non-signing inventor using three online search engines and inquiring with former co-workers do not constitute a diligent effort at locating this individual. The record does not support a finding that diligent attempts were made to obtain a forwarding address or to locate the non-signing inventor by means such as through telephone, databases, or a private locator service. If such searches are performed, and are sufficiently broad so as to provide a reasonable opportunity to locate this individual, and it is then

---

1 Petition, pages 1 and 4.
2 Petition, page 3.
3 Petition, page 2. See also Exhibits C4 and C5.
4 Petition, page 2. See also Exhibit C6 and C7.
5 Exhibits C5 and C7.

averred that such attempts failed, then Petitioner will have provided the necessary proof required under 37 C.F.R. § 1.47 that the non-signing inventor cannot be reached. Details of the efforts to locate the non-signing inventor are to be set forth in an affidavit or declaration of facts by a person having first hand knowledge of the details.

Regarding the fifth requirement of Rule 1.47(b), Petitioner has failed to prove sufficient proprietary interest in the subject matter to justify the filing of the application. More specifically, Petitioner has included a copy of the assignment document where the non-singing inventor assigned his rights to Conexant Systems (Exhibit B1), however Petitioner has not established the right of the purported assignee to take action, pursuant to 37 C.F.R. § 3.73. See also MPEP § 324. On renewed petition, Petitioner should both include a statement pursuant to 37 C.F.R. § 3.73(b) and record a copy of the assignment which constitutes Exhibit B1.

Regarding the sixth requirement of Rule 1.47(b), no proof of irreparable damage has been submitted.[6] A statement by Rule 47(b) applicant that the filing is necessary to preserve the rights of the parties would be sufficient to address this requirement.

Regarding the seventh requirement of Rule 1.47(b), Petitioner has not submitted an oath or declaration that overcomes the Examiner's objections. On renewed petition, Petitioner should include a declaration that contains the proper language and has been executed in accordance with MPEP § 409.03(b). Petitioner should ensure that the declaration is executed in such a manner that clearly indicates that the individual who executes the declaration is not an inventive entity.

Any reply must be submitted within **TWO MONTHS** from the mail date of this decision. Extensions of time under 37 C.F.R. § 1.136(a) are permitted. The reply should include a cover letter entitled "Renewed Petition pursuant to 37 C.F.R. § 1.47(b)." This is not a final agency action within the meaning of 5 U.S.C § 704.

Any such renewed petition should indicate in a prominent manner that the attorney handling this matter is Paul Shanoski, and may be submitted by mail,[7] hand-delivery,[8] or facsimile.[9] Registered

---

6 See MPEP § 409.03(g).
7 Mail Stop Petition, Commissioner for Patents, United States Patent and Trademark Office, P.O. Box 1450, Alexandria, VA, 22313-1450.
8 Customer Window, Randolph Building, 401 Dulaney Street, Alexandria, VA, 22314.

users of EFS-Web may alternatively submit a response to this decision via EFS-Web.[10]

If responding by mail, Petitioner is advised not to place the undersigned's name on the envelope. Only the information that appears in the footnote should be included - adding anything else to the address will delay the delivery of the response to the undersigned.

Telephone inquiries regarding *this decision* should be directed to the undersigned at (571) 272-3225.[11] All other inquiries concerning examination procedures should be directed to the Technology Center.

/Paul Shanoski/
Paul Shanoski
Senior Attorney
Office of Petitions

9 (571) 273-8300- please note this is a central facsimile number.
10 https://sportal.uspto.gov/authenticate/authenticateuserlocalepf.html
11 Petitioner will note that all practice before the Office should be in writing, and the action of the Office will be based exclusively on the written record in the Office. See 37 C.F.R. § 1.2. As such, Petitioner is reminded that no telephone discussion may be controlling or considered authority for Petitioner's further action(s).

UNITED STATES PATENT AND TRADEMARK OFFICE

COMMISSIONER FOR PATENTS
UNITED STATES PATENT AND TRADEMARK OFFICE
P.O. BOX 1450
ALEXANDRIA, VA 22313-1450
WWW.USPTO.GOV

Paper No.

THOMAS, KAYDEN, HORSTEMEYER & RISLEY, LLP
600 GALLERIA PARKWAY, S.E.
STE 1500
ATLANTA GA 30339-5994

MAILED

JUN 14 2010

OFFICE OF PETITIONS

In re Application of :
Moore :
Application No. 10/642,309 : DECISION ON RENEWED PETITION
Filed: August 18, 2003 : PURSUANT TO
Attorney Docket No. 60707-1330 : 37 C.F.R. § 1.47(B)
Title: OPERATING SYSTEM FOR :
EXECUTING COMPUTER SOFTWARE :
APPLICATIONS :

This is in response to the renewed petition pursuant to 37 C.F.R. § 1.47(b), filed April 29, 2009.

This renewed petition pursuant to 37 C.F.R. § 1.47(b) is **DISMISSED.**

On August 18, 2003 this application was filed with an unexecuted declaration, identifying Mark Justin Moore as the sole inventor. On August 18, 2004, an executed declaration was submitted, along with the surcharge associated with the late submission of the same. In a final Office action mailed on December 12, 2007, a non-final Office action mailed on July 2, 2008, and a final Office action mailed on January 21, 2009, the Examiner objected to the declaration.

A grantable petition under 37 C.F.R. § 1.47(b) requires:

(1) the petition fee of as set forth in 37 C.F.R. § 1.17(g);
(2) the surcharge as set forth in 37 C.F.R. § 1.16(e), if the petition is not filed at the time of filing the application;
(3) a statement of the last known address of the non-

signing inventor;
(4) proof that either:
(a) a copy of the application was sent or given to the non-signing inventor for review and proof that the non-signing inventor refused to sign, or;
(b) proof that diligent efforts have been made to locate the non-signing inventor
(5) proof that the Rule 47(b) applicant has sufficient proprietary interest in the subject matter to justify the filing of the application;
(6) proof of irreparable damage, and;
(7) an acceptable oath or declaration in compliance with 35 U.S.C. §§ 115 and 116 and 37 C.F.R. § 1.63.

An original petition pursuant to 37 C.F.R. § 1.47(b) was filed on November 23, 2009, along with, *inter alia*, the petition fee, a statement of facts, an assertion that the non-singing inventor cannot be found,[1] and the last known address of the non-signing inventor.[2] The original petition was dismissed via the mailing of a decision on January 29, 2010, which indicated that requirements (1) - (3) of Rule 1.47(b) had been satisfied, and requirements (4) - (7) had not been satisfied.

With this renewed petition, Petitioner has submitted, *inter alia*, a statement pursuant to 37 C.F.R. § 3.73(b),[3] proof of irreparable damage, and an acceptable declaration.

To date, requirements (1) - (3) and (5) - (7) have been satisfied.

Regarding the fourth requirement of Rule 1.47(b), the decision on the original petition set forth, *in pertinent part*:

> Petitioner has indicted that he has inquired with the non-signing inventor's former co-workers,[4] performed "multiple Internet searches" for this individual,[5] and neither these communications nor these searches were successful in locating this individual.[6] *As Petitioner has set forth that the non-signing inventor cannot*

1 Original petition, pages 1 and 4.
2 Id. at 3.
3 It is noted that the corresponding assignment was recorded in the Office on February 16, 2010. Additional assignments were recorded on March 1, 2010 and March 11, 2010.
4 Original Petition, page 2. See also Exhibits C4 and C5.
5 Original Petition, page 2. See also Exhibit C6 and C7.
6 Exhibits C5 and C7, submitted with the original petition.

> *be found or reached, Petitioner is required to establish that a diligent effort was made to locate this individual.* However the cursory searches that were performed for the non-signing inventor using three online search engines and inquiries with former co-workers do not constitute a diligent effort at locating this individual. The record does not support a finding that diligent attempts were made to obtain a forwarding address or to locate the non-signing inventor by means such as through telephone, databases, or a private locator service. If such searches are performed, and are sufficiently broad so as to provide a reasonable opportunity to locate this individual, and it is then averred that such attempts failed, then Petitioner will have provided the necessary proof required under 37 C.F.R. § 1.47 that the non-signing inventor cannot be reached. Details of the efforts to locate the non-signing inventor are to be set forth in an affidavit or declaration of facts by a person having first hand knowledge of the details.

With this renewed petition, Petitioner has indicated that he contacted a Spanish law firm and made the additional step of mailing a letter to the non-signing inventor on February 12, 2010.[7] The sending of a letter, coupled with the prior efforts which have been undertaken, do not constitute a diligent effort at locating the non-signing inventor.

Any reply must be submitted within **TWO MONTHS** from the mail date of this decision. Extensions of time under 37 C.F.R. § 1.136(a) are permitted. The reply should include a cover letter entitled "Second Renewed Petition pursuant to 37 C.F.R. § 1.47(b)." This is not a final agency action within the meaning of 5 U.S.C § 704.

Any such renewed petition should indicate in a prominent manner that the attorney handling this matter is Paul Shanoski, and may be submitted by mail,[8] hand-delivery,[9] or facsimile.[10] Registered users of EFS-Web may alternatively submit a response to this decision via EFS-Web.[11]

If responding by mail, Petitioner is advised not to place the undersigned's name on the envelope. Only the information that appears in the footnote should be included - adding anything else to the address will delay the delivery of the response to the undersigned.

---

7 Exhibit C8, submitted with this renewed petition. See also Exhibits C10 and C11, submitted contemporaneously therewith.
8 Mail Stop Petition, Commissioner for Patents, United States Patent and Trademark Office, P.O. Box 1450, Alexandria, VA, 22313-1450.
9 Customer Window, Randolph Building, 401 Dulaney Street, Alexandria, VA, 22314.
10 (571) 273-8300 - please note this is a central facsimile number.
11 https://sportal.uspto.gov/authenticate/authenticateuserlocalepf.html

Telephone inquiries regarding *this decision* should be directed to the undersigned at (571) 272-3225.[12] All other inquiries concerning examination procedures should be directed to the Technology Center.

/Paul Shanoski/
Paul Shanoski
Senior Attorney
Office of Petitions

12 Petitioner will note that all practice before the Office should be in writing, and the action of the Office will be based exclusively on the written record in the Office. See 37 C.F.R. § 1.2. As such, Petitioner is reminded that no telephone discussion may be controlling or considered authority for Petitioner's further action(s).

UNITED STATES PATENT AND TRADEMARK OFFICE

COMMISSIONER FOR PATENTS
UNITED STATES PATENT AND TRADEMARK OFFICE
P.O. BOX 1450
ALEXANDRIA, VA 22313-1450
www.uspto.gov

MAILED
FROM DIRECTORS OFFICE

AUG 05 2004

TECHNOLOGY CENTER 3600

TECHNOPROP COLTON, L.L.C.
P.O. Box 657685
Atlanta, GA 31156-7685

In re application of : **DECISION ON PETITION**
Golden S. Hinton : **TO MAKE PECIAL**
Application No. 10/642,317 : **APPLICANT'S AGE)**
Filed: August 15, 2003 :
For: VEHICLE OF NOVEL CONFIGURATION AND OPERATION

This is a decision on the petition submitted on August 15, 2003 under 37 CFR 1.102 (c) to make the above-identified application special under the accelerated examination procedure set forth in MPEP 708.02, Section IV: Applicant's Age.

The petition is **GRANTED**.

An application may be accorded special status upon the filing of a petition providing evidence showing that the applicant is at least 65 years old. Such a showing may be provided by evidence such as a birth certificate or a statement from the applicant.

The evidence submitted with the petition is declaration signed by Mr. Hinton indicating that he is at least 65 years of age.

The examiner is directed (1) to make an interference search for possible interfering applications, (2) to promptly examine this application out of turn, and (3) if any interfering application is discovered, to examine such application simultaneously and state in the first official letter of such application that it is being taken out of turn because of a possible interference.

Petitioner is advised that this application will continue to be special, throughout its entire prosecution and pendency, including interference or appeal, if any, only if petitioner makes a prompt ***bona fide*** effort, in response to each Office action, to place the

application in condition for allowance, even if it is necessary to conduct an interview with the examiner to accomplish this purpose.

SUMMARY: Petition to Make Special **GRANTED**.

Kenneth J. Dorner
Special Programs Examiner
Technology Center 3600
(703) 308-0866

KJD/pav: 7/28/04

UNITED STATES PATENT AND TRADEMARK OFFICE

COMMISSIONER FOR PATENTS
UNITED STATES PATENT AND TRADEMARK OFFICE
P.O. BOX 1450
ALEXANDRIA, VA 22313-1450
www.uspto.gov

MAILED
FROM DIRECTORS OFFICE

AUG 05 2004

TECHNOLOGY CENTER 3600

TECHNOPROP COLTON, L.L.C.
P.O. Box 657685
Atlanta, GA 31156-7685

In re application of : **DECISION ON PETITION**
Golden S. Hinton : **TO MAKE PECIAL**
Application No. 10/642,317 : **APPLICANT'S AGE)**
Filed: August 15, 2003 :
For: VEHICLE OF NOVEL CONFIGURATION AND OPERATION

This is a decision on the petition submitted on August 15, 2003 under 37 CFR 1.102 (c) to make the above-identified application special under the accelerated examination procedure set forth in MPEP 708.02, Section IV: Applicant's Age.

The petition is **GRANTED**.

An application may be accorded special status upon the filing of a petition providing evidence showing that the applicant is at least 65 years old. Such a showing may be provided by evidence such as a birth certificate or a statement from the applicant.

The evidence submitted with the petition is declaration signed by Mr. Hinton indicating that he is at least 65 years of age.

The examiner is directed (1) to make an interference search for possible interfering applications, (2) to promptly examine this application out of turn, and (3) if any interfering application is discovered, to examine such application simultaneously and state in the first official letter of such application that it is being taken out of turn because of a possible interference.

Petitioner is advised that this application will continue to be special, throughout its entire prosecution and pendency, including interference or appeal, if any, only if petitioner makes a prompt ***bona fide*** effort, in response to each Office action, to place the

application in condition for allowance, even if it is necessary to conduct an interview with the examiner to accomplish this purpose.

SUMMARY: Petition to Make Special **GRANTED**.

Kenneth J. Dorner
Special Programs Examiner
Technology Center 3600
(703) 308-0866

KJD/pav: 7/28/04

UNITED STATES PATENT AND TRADEMARK OFFICE

Commissioner for Patents
United States Patent and Trademark Office
P.O. Box 1450
Alexandria, VA 22313-1450
www.uspto.gov

JACOBSON HOLMAN PLLC
400 SEVENTH STREET NW
SUITE 600
WASHINGTON DC 20004

COPY MAILED

APR 09 2007

OFFICE OF PETITIONS

In re Application of :
Miguel Alejandro Pardo :
Application No. 10/642,332 : ON PETITION
Filed: August 18, 2003 :
Title: Novolute Geometry for Power Gears :

This is a decision on the petition to withdraw the holding of abandonment under 37 CFR 1.181, filed February 23, 2007.

The petition is **GRANTED**.

This application was held abandoned for failure to timely file a response to the non-final Office action, mailed June 28, 2006. This Office action set an extendable period for reply of one (1) month. No response having been received, the application became abandoned on July 29, 2006. A Notice of Abandonment was mailed on January 24, 2007.

It is obvious from reviewing the file that the Office action was mailed to the incorrect address. The Office action should have been addressed to the address set forth in the Change of Correspondence Address and Power of Attorney, filed on February 23, 2006.

In view thereof, **THE HOLDING OF ABANDONMENT IS WITHDRAWN.**

The matter is being forwarded to Group Art Unit 3682 for re-mailing of the June 28, 2006 Office action to the above address of record, setting a new period for reply.

Telephone inquiries regarding this decision should be directed to the undersigned at (571)272-3207.

Cliff Congo
Petitions Attorney
Office of Petitions

UNITED STATES PATENT AND TRADEMARK OFFICE

COMMISSIONER OF PATENTS

October 12, 2005

Pierre C. Van Rysselberghe
Kolisch Hartwell
200 Pacific Bldg.
520 S. W. Yamhill St.
Portland, Oregon 97204

In re Application of:
Spencer B. Dick
Serial No.: 10/642,350 On Petition
Filing Date: August 15, 2003
For: **CARRIAGE AND RAIL ASSEMBLY FOR A LINEAR POSITIONING SYSTEM**

In response to the petition received on June 6, 2005, to withdraw the holding of abandonment in the above application.

The petition is Granted.

The above-identified application became abandoned for failure to reply within the meaning of 37 C.D.R 1.113 in a timely manner to the Notice to File Missing Parts of Non Provisional Application mailed November 12, 2003. Which set forth a shortened statutory period for reply of two months. Accordingly, the above-identified application became abandoned January 13, 2004.

The evidence submitted is sufficient to establish that the petitioners did not received the Notice to File Missing Parts of non Provisional Application.

A new Notice to File Missing Parts is enclosed giving applicant two months from October 12, 2005 to respond.

Telephone inquiries concerning this application may be directed to Doshie E. Day (703) 308-3640.

Doshie E. Day
Program Management Assistant
Office of Initial Patent Examination

UNITED STATES PATENT AND TRADEMARK OFFICE

Commissioner for Patents
United States Patent and Trademark Office
P.O. Box 1450
Alexandria, VA 22313-1450
www.uspto.gov

Pierre C. Van Rysselberghe
Kolisch Hartwell
200 Pacific Bldg.
520 S.W. Yamhill St.
Portland OR 97204

COPY MAILED

JUN 0 8 2007

OFFICE OF PETITIONS

In re Application of :
Spencer Dick :
Application No. 10/642,350 : ON PETITION
Filed: August 15, 2003 :
Attorney Docket No. PAI 308B :

This is a decision on petition to withdraw the holding of abandonment under 37 CFR 1.181 filed April 26, 2007.

The petition to withdraw the holding of abandonment is **GRANTED**.

This application was held abandoned June 25, 2006 for failure to timely reply to the non-final Office Action mailed on March 24, 2006. The non-final Office Action set a three (3) month extendable time period for reply. A Notice of Abandonment was mailed October 10, 2006.

Petitioner asserts that a reply to the non-final Office Action was submitted on September 29, 2006. As evidence, petitioner has submitted a copy of the reply which contains an amendment, a three month extension of time, and a certificate of mailing dated September 25, 2006 pursuant to 37 CFR 1.8. Petitioner has also provided a copy of a postcard receipt with an Office stamp of September 29, 2006.

The response received September 29, 2006 has been located. In view of the evidence submitted, the response is deemed timely.

The Notice of Abandonment is hereby vacated and the holding of abandonment is withdrawn.

The application file is being forwarded to Technology Center 3700 for further processing of amendment.

Telephone inquiries concerning this matter should be directed to the undersigned at (571) 272-3215.

Charlema R. Grant

Charlema R. Grant
Petitions Attorney
Office of Petitions

UNITED STATES PATENT AND TRADEMARK OFFICE

UNITED STATES DEPARTMENT OF COMMERCE
United States Patent and Trademark Office
Address: COMMISSIONER FOR PATENTS
P.O. Box 1450
Alexandria, Virginia 22313-1450
www.uspto.gov

December 9, 2004

Cindy S. Kaplan
Ritter, Lang & Kaplan
12930 Saratoga Ave. , Suite D1
Saratoga, CA 95070

In re application of:
Youqi Wang, et al
Serial No.: 10/642,352
Filed: August 15, 2003
For: SYSTEM FOR SYNTHESIS OF ELECTRODE ARRAY

In response to the petition received July 27, 2004, to withdraw the holding of abandonment in the above application.

The petition is Granted.

The above-identified application became abandoned for failure to reply within the meaning of 37 C.D.R. 1.113 in a timely manner to the Notice to File Missing Parts of Application mailed December 8, 2003. Which set forth a shortened statutory period for reply of two months. Accordingly, the above-identified application became abandoned on February 10, 2004.

On July 27, 2004 the office received a communication from the attorney of record. Enclosed was an acknowledgement that the attorney never received the Notice to file Missing Parts of Application mailed on December 8, 2003. On July 15, 2004 after not hearing from the office Counsel requested a fax copy of the Notice to File Missing Parts of Application. The correspondence address on the notice was addressed to the Commissioner of Patents.

The evidence submitted is sufficient to establish that the petitioners never received the Notice to File Missing Parts of Application issued on December 8, 2003.

The application will be completed with the documents received on July 27, 2004.

The office regrets any inconvenience this may have caused the client.

Telephone inquiries concerning this matter may be directed to Doshie E. Day at (703) 308-3640.

Doshie E. Day
Program Management Assistant
Office Initial Patent Examination

UNITED STATES PATENT AND TRADEMARK OFFICE

COMMISSIONER FOR PATENTS
UNITED STATES PATENT AND TRADEMARK OFFICE
P.O. BOX 1450
ALEXANDRIA, VA 22313-1450
www.uspto.gov

Paper No.

RITTER, LANG & KAPLAN LLP
P.O. BOX 2448
SARATOGA, CA 95070

COPY MAILED

AUG 2 2 2005

OFFICE OF PETITIONS

In re Application of :
Wang et al. : DECISION ON PETITION
Application No. 10/642,352 :
Deposited: August 15, 2003 :
Attorney Docket No. SYMXP011 :

This is a decision on the "PETITION TO ESTABLISH PRIOR RECEIPT IN PTO OF PAGES OF SPECIFICATION UNDER 37 C.F.R. 1.53(e)," filed July 27, 2004. Applicants petition to include page 1 of the specification in the originally filed patent application accorded a filing date of August 15, 2003.

Application papers in the above-identified application were deposited on August 15, 2003. However, on December 8, 2003, the Initial Patent Examination Division mailed applicant a "Notice to File Missing Parts of Nonprovisional Application." Applicants were notified that the application papers had been accorded a filing date; however, page 1 of the specification appeared to have been omitted from the application.

In response, applicants filed the instant petition. Applicants assert that all pages of the application were filed with the USPTO on August 15, 2003. In support thereof, applicants submit a copy of their return postcard receipt. In addition, applicants supplied a copy of missing page 1.

A postcard receipt, which itemizes and properly identifies the items which are being filed serves as prima facie evidence of receipt in the Office of all items listed thereon on the date stamped thereon by the Office. See MPEP 503. A review of petitioner's postcard receipt reveals that: 1) it was date stamped as received by the Office on August 15, 2003; 2) it specifically identifies the items being filed, including

"Specification, 45 pages" and 3) it lacks any annotation of nonreceipt of any item denoted on the postcard. Thus, petitioner has shown that the items denoted, including the 45 pages of specification, were filed on August 15, 2003.

The application papers already considered received in the Office on August 15, 2003, were reviewed along with the missing page of specification submitted on petition. These papers together constitute the items described on the postcard receipt as "Specification, 45 pages." Petitioner has shown that p. 1 of the specification was among the items present in the application on the date of deposit and should be included in the original application papers.

Accordingly, the petition is **GRANTED**.

Given the basis for granting the petition, the petition fee is subject to refund. Accordingly, the fee though authorized will not be charged to Petitioner's Deposit Account. (It is noted that, in association with the other petition filed July 27, 2004, a request to refund petition fees totalling $240 was forwarded to the Office of Finance on April 18, 2005)

The application is being forwarded to the Office of Initial Patent Examination (OIPE) for:

- further processing with a filing date of August 15, 2003, using the application papers received in the Office on that date and the missing page of specification, p. 1, re-supplied on petition filed July 27, 2004.

Applicants will receive appropriate notifications regarding the fees owed, if any, and other information in due course from OIPE.

Telephone inquiries related to this decision should be directed to the undersigned at 571-272-3219.

Nancy Johnson
Senior Petitions Attorney
Office of Petitions

UNITED STATES PATENT AND TRADEMARK OFFICE

Commissioner for Patents
United States Patent and Trademark Office
P.O. Box 1450
Alexandria, VA 22313-1450
www.uspto.gov

VAN PELT & YI LLP
10050 N. FOOTHILL BLVD.
SUITE 200
CUPERTINO CA 95014

MAILED

MAR 06 2009

OFFICE OF PETITIONS

In re Application of
William Sobel
Application No. 10/642,355
Filed: August 14, 2003
Attorney Docket No. SYMAP024

: DECISION ON PETITION

This is a decision on the petition under the unavoidable provisions of 37 CFR 1.137(a), filed December 8, 2008, to revive the above-identified application.

The petition under 37 CFR 1.137(a) is **DISMISSED.**

Any further petition to revive must be submitted within TWO (2) MONTHS from the mail date of this decision. Extensions of time under 37 CFR 1.136(a) are permitted. The reconsideration request should include a cover letter entitled "Renewed Petition under 37 CFR 1.137(a)." This is **not** a final agency action within the meaning of 5 U.S.C.§ 704.

This application became abandoned for failure to timely submit the issue and publication fees, as required by the Notice of Allowance and Fee (s) Due, which was mailed June 17, 2008. The Notice of Allowance and Fee (s) Due and the Notice of Allowability set a three (3) month statutory period for reply. Extensions of time were not available under the provisions of 37 CFR 1.136(a). Accordingly, this application became abandoned on September 18, 2008. A Notice of Abandonment was mailed on October 14, 2008.

A grantable petition under 37 CFR 1.137(a) must be accompanied by: (1) the required reply, unless previously filed; (2) the petition fee as set forth in 37 CFR 1.17(l); (3) a showing to the satisfaction of the Director that the entire delay in filing the required reply from the due date for the reply until the filing of a grantable petition pursuant to 37 CFR 1.137(a) was unavoidable; and (4) any terminal disclaimer (and fee as set forth in 37 CFR 1.20(d)) required pursuant to 37 CFR 1.137(d). The instant petition lacks item (3).

As to item (3), the Office may revive an abandoned application if the delay in responding to the relevant outstanding office requirement is shown to the satisfaction of the Director to have been "avoidable." See, 37 CFR 1.137(a)(3). Decisions on reviving abandoned applications have adopted the reasonably prudent person standard in determining if the delay was unavoidable. Ex parte Pratt, 1887 Dec. Comm'r Pat. 31, 32-33 (Comm'r Pat. 1887) (the term "unavoidable" is applicable to ordinary human affairs, and requires no more greater care or diligence than is

generally used and observed by prudent and careful men in relation to their most important business."); In re Mattullath, 38 App. D.C. 497, 514-15 (D.C. Cir. 1912); Ex parte Henrich, 1913 Dec. Comm'r Pat. 139, 141 (Comm'r Pat. 1913). In addition, decisions on revival are made on a "case by case basis, taking all the facts and circumstances into account." Smith v. Mossinghoff, 671 F.2d 533, 538, 213 USPQ 977, 982 (D.C. Cir. 1982). A petition to revive an application as unavoidably abandoned cannot be granted where petitioner has failed to meet his or her burden of establishing the cause of the unavoidable delay. Haines v. Quigg, 673 F. Supp. 314, 5 USPQ2D 1130 (N.D. Ind. 1987).

A review of the written record indicates no irregularity in the mailing of the Office action, and, in the absence of any irregularity, there is a strong presumption that the Office action was properly mailed to the practitioner at the address of record. This presumption may be overcome by a showing that the Office action was not in fact received. In this regard, the showing required to establish the failure to receive the Office action must consist of the following:

1. a statement from practitioner stating that the Office action was not received by the practitioner. The statement should also describe the system used for recording an Office action received at the correspondence address of record and establish that the docketing system was sufficiently reliable;

2. a statement from the practitioner attesting to the fact that a search of the file jacket and docket records indicates that the Office action was not received; and

3. a copy of the master docket for the firm docket record where the nonreceived Office action would have been entered had it been received must be attached to and referenced in the practitioner's statement. If no master docket exists, the practitioner should so state and provide other evidence such, as but not limited: to the application file jacket, incoming mail log; calendar; reminder system or individual docket record for the application in question

Petitioner has failed to meet (3). A copy of a master docket or a statement that a master docket does not exist has not been provided. On petition, petitioner has provided a copy of what appears to be a docket record specifically for the above-identified application. A copy of the practitioner's record(s) required to show non-receipt of the Office action should include the master docket for the firm. That is, if a three month period for reply was set in the nonreceived Office action, a copy of the master docket report showing all replies docketed for a date three months from the mail date of the nonreceived Office action must be submitted as documentary proof of nonreceipt of the Office action. If no such master docket exists, the practitioner should so state and provide other evidence such as, but not limited to, the following: the application file

jacket; incoming mail log; calendar; reminder system; or the individual docket record for the application in question.

If petitioner cannot supply the evidence necessary, or simply does not wish to, petitioner should consider filing a petition under 37 CFR 1.137(b) stating that the delay was unintentional. Public Law 97-247, § 3, 96 Stat. 317 (1982), which revised patent and trademark fees, amended 35 U.S.C. § 41(a)(7) to provide for the revival of an "unintentionally" abandoned application without a showing that the delay in prosecution or in late payment of the issue fee was "unavoidable." This amendment to 35 U.S.C. § 41(a)(7) has been implemented in 37 CFR 1.137(b). An "unintentional" petition under 37 CFR 1.137(b) must be accompanied by the petition fee.

The filing of a petition under 37 CFR 1.137(b) cannot be intentionally delayed and therefore must be filed promptly. A person seeking revival due to unintentional delay cannot make a statement that the delay was unintentional unless the entire delay, including the date it was discovered that the application was abandoned until the filing of the petition to revive under 37 CFR 1.137(b), was unintentional. A statement that the delay was unintentional is not appropriate if petitioner intentionally delayed the filing of a petition for revival under 37 CFR 1.137(b).

Further correspondence with respect to this matter should be addressed as follows:

By Mail: Mail Stop PETITION
Commissioner for Patents
P. O. Box 1450
Alexandria, VA 22313-1450

By hand: U. S. Patent and Trademark Office
Customer Service Window, Mail Stop Petitions
Randolph Building
401 Dulany Street
Alexandria, VA 22314

By facsimile: **(571) 273-8300**
Attn: Office of Petitions

Telephone inquiries concerning this decision should be directed to the undersigned at (571) 272-3215.

Charlema Grant
Petitions Attorney
Office of Petitions

UNITED STATES PATENT AND TRADEMARK OFFICE

COMMISSIONER FOR PATENTS
UNITED STATES PATENT AND TRADEMARK OFFICE
P.O. BOX 1450
ALEXANDRIA, VA 22313-1450
www.uspto.gov

HUNTON & WILLIAMS LLP / SYMANTEC CORPORATION
INTELLECTUAL PROPERTY DEPT.
1900 K STREET, NW
SUITE 1200
WASHINGTON DC 20006-1109

COPY MAILED

JUN 0 8 2009

OFFICE OF PETITIONS

In re Application of :
William Sobel :
Application No. 10/642,355 : ON PETITION
Filed: August 14, 2003 :
Attorney Docket No. SYMAP024 :

This is a decision on the renewed petition under 37 CFR 1.137(a), filed April 13, 2009, to revive the above-identified application.

The petition is **GRANTED.**

This application became abandoned for failure to timely submit the issue fee, as required by the Notice of Allowance and Fee (s) Due, which was mailed June 17, 2008. The Notice of Allowance and Fee (s) Due and the Notice of Allowability set a three (3) month statutory period for reply. Extensions of time were not available under the provisions of 37 CFR 1.136(a). Accordingly, this application became abandoned on September 18, 2008. A Notice of Abandonment was mailed on October 14, 2008. A petition under 37 CFR 1.137(a) was dismissed on March 6, 2009.

The petition satisfies the requirements of 37 CFR 1.137(a) in that petitioner has supplied (1) the required reply in the form of the issue fee; (2) the petition fee of $540; and (3) a showing to the satisfaction of the Director that the entire delay was unavoidable.

This application is being referred to the Office of Data Management for issuance of patent.

Telephone inquiries concerning this decision should be directed to the undersigned at (571) 272-3215.

Charlema Grant
Petitions Attorney
Office of Petitions

UNITED STATES PATENT AND TRADEMARK OFFICE

UNITED STATES DEPARTMENT OF COMMERCE
United States Patent and Trademark Office
Address: COMMISSIONER FOR PATENTS
P.O. Box 1450
Alexandria, Virginia 22313-1450
www.uspto.gov

APPLICATION NUMBER	FILING OR 371(C) DATE	FIRST NAMED APPLICANT	ATTY. DOCKET NO./TITLE
10/642,355	08/14/2003	William E. Sobel	SYMAP024

CONFIRMATION NO. 1616

POA ACCEPTANCE LETTER

69417
HUNTON & WILLIAMS LLP / SYMANTEC CORPORATION
INTELLECTUAL PROPERTY DEPT.
1900 K STREET, NW
SUITE 1200
WASHINGTON, DC 20006-1109

Date Mailed: 06/08/2009

NOTICE OF ACCEPTANCE OF POWER OF ATTORNEY

This is in response to the Power of Attorney filed 06/05/2009.

The Power of Attorney in this application is accepted. Correspondence in this application will be mailed to the above address as provided by 37 CFR 1.33.

/crgrant/

Office of Data Management, Application Assistance Unit (571) 272-4000, or (571) 272-4200, or 1-888-786-0101

UNITED STATES PATENT AND TRADEMARK OFFICE

UNITED STATES DEPARTMENT OF COMMERCE
United States Patent and Trademark Office
Address: COMMISSIONER FOR PATENTS
P.O. Box 1450
Alexandria, Virginia 22313-1450
www.uspto.gov

APPLICATION NUMBER	FILING OR 371(C) DATE	FIRST NAMED APPLICANT	ATTY. DOCKET NO./TITLE
10/642,355	08/14/2003	William E. Sobel	SYMAP024

CONFIRMATION NO. 1616

POWER OF ATTORNEY NOTICE

35833
VAN PELT & YI LLP
10050 N. FOOTHILL BLVD.
SUITE 200
CUPERTINO, CA 95014

Date Mailed: 06/08/2009

NOTICE REGARDING CHANGE OF POWER OF ATTORNEY

This is in response to the Power of Attorney filed 06/05/2009.

- The Power of Attorney to you in this application has been revoked by the assignee who has intervened as provided by 37.CFR 3.71. Future correspondence will be mailed to the new address of record(37 CFR 1.33).

/crgrant/

Office of Data Management, Application Assistance Unit (571) 272-4000, or (571) 272-4200, or 1-888-786-0101

UNITED STATES PATENT AND TRADEMARK OFFICE

UNITED STATES DEPARTMENT OF COMMERCE
United States Patent and Trademark Office
Address: COMMISSIONER FOR PATENTS
P.O. Box 1450
Alexandria, Virginia 22313-1450
www.uspto.gov

BUCHANAN INTELLECTUAL PROPERTY OFFICE LLC
P.O. BOX 700
PERRYSBURG, OH 43552-0700

Mail Date: 04/21/2010

Applicant	: Dusan Pavcnik	: DECISION ON REQUEST FOR
Patent Number	: 7628803	: RECALCULATION of PATENT
Issue Date	: 12/08/2009	: TERM ADJUSTMENT IN VIEW
Appliction No	: 10/642,372	: OF WYETH AND NOTICE OF INTENT TO
Filed	: 08/15/2003	: ISSUE CERTIFICATE OF CORRECTION
		:

The Request for Recalculation is **GRANTED** to the extent indicated.

The patent term adjustment has been determined to be **383** days. The USPTO will *sua sponte* issue a certificate of correction reflecting the amount of PTA days determined by the recalculation.

Prior to the issuance of the certificate of correction, the USPTO will afford patentee an opportunity to be heard and request reconsideration. Accordingly, patentee has **one month or thirty (30) days**, whichever is longer, to file a request for reconsideration of this patent term adjustment calculation. See 35 U.S.C. 154(b)(3)(B)(ii) and 37 CFR 1.322(a)(4). No extensions of time will be granted under 37 CFR 1.136.

Patentee should use document code PET.OP if electronically filing a request for reconsideration of this patent term adjustment calculation. The patentee must also include the information required by 37 CFR 1.705(b)(2) and the fee required by 37 CFR 1.18(e). If patentee does not file a timely request for reconsideration of this patent term adjustment calculation including the information required by 37 CFR 1.705(b)(2) and the fee required by 37 CFR 1.18(e), the USPTO will issue a certificate of correction reflecting the PTA determination noted above.

Patentee should be aware that in order to preserve the right to review in the United States District Court for the District of Columbia of the USPTO patent term adjustment determination, patentee must ensure that he or she also take the steps required under 35 U.S.C. 154(b)(4)(A) in a timely manner. Nothing in the request for recalculation should be construed as providing an alternative time frame for commencing a civil action under 35 U.S.C. 154(b)(4)(A).

Any questions concerning this decision should be directed to the Office of Patent Legal Administration at 571-272-7702.

UNITED STATES PATENT AND TRADEMARK OFFICE

COMMISSIONER FOR PATENTS
UNITED STATES PATENT AND TRADEMARK OFFICE
P.O. BOX 1450
ALEXANDRIA, VA 22313-1450
www.uspto.gov

CANTOR COLBURN, LLP
55 GRIFFIN ROAD SOUTH
BLOOMFIELD, CT 06002

COPY MAILED

DEC 2 2 2005

OFFICE OF PETITIONS

In re Patent No. 6,952,882 :
Issue Date: October 11, 2005 :
Application No. 10/642,385 : NOTICE
Filed: April 15, 2003 :
Attorney Docket No. FAO-0140 :

This is a notice regarding your request for acceptance of a fee deficiency submission under 37 CFR 1.28. On September 1, 1998, the Court of Appeals for the Federal Circuit held that 37 CFR 1.28(c) is the sole provision governing the time for correction of the erroneous payment of the issue fee as a small entity. **See DH Technology v. Synergystex International, Inc. 154 F.3d 1333, 47 USPQ2d 1865 (Fed. Cir. Sept. 1, 1998).**

The Office no longer investigates or rejects original or reissue applications under 37 CFR 1.56. **1098 Off. Gaz. Pat. Office 502 (January 3, 1989)**. Therefore, nothing in this Notice is intended to imply that an investigation was done.

Your fee deficiency submission under 37 CFR 1.28 is hereby **ACCEPTED**.

This patent is no longer entitled to small entity status. Accordingly, all future fees paid must be paid at the large entity rate.

Inquiries related to this communication should be directed to the undersigned at (571) 272-3226.

Andrea Smith
Petitions Examiner
Office of Petitions

UNITED STATES PATENT AND TRADEMARK OFFICE

COMMISSIONER FOR PATENTS
UNITED STATES PATENT AND TRADEMARK OFFICE
P.O. BOX 1450
ALEXANDRIA, VA 22313-1450
www.uspto.gov

JOHN G.CHUPA
LAW OFFICES OF JOHN CHUPA AND ASSOCIATES, P.C.
SUITE 50
28535 ORCHARD LAKE RD.
FARMINGTON HILLS, MI 48334

COPY MAILED

JAN 2 8 2005

OFFICE OF PETITIONS

In re Application of :
Robert Bores :
Application No. 10/642,425 : ON PETITION
Filed: August 13, 2003 :
For: ALL-IN-ONE GOLF TOOL ASSEMBLY :

This is a decision on the petition under 37 CFR 1.137(b), filed by November 3, 2004, to revive the above-identified application.

The petition is **GRANTED**.

The application became abandoned for failure to timely respond to a Notice to File Missing Parts mailed November 12, 2003. The notice required the basic filing fee, additional claim fees and the requisite surcharge under 37 CFR 1.16(e). On October 28, 2004, a Notice of Abandonment was mailed. In response, on November 3, 2004, the present petition was filed, as well as the basic filing fee, additional claim fees and the requisite surcharge.

37 CFR 1.137(b)(3) requires a statement that the entire delay in filing the required reply from the due date for the reply until the filing of a grantable petition pursuant to 37 CFR 1.137(b) was unintentional. Although the statement contained in the petition varies from the language required by 37 CFR 1.137(b)(3), the statement will be construed as the statement required by 37 CFR 1.137(b)(3). Petitioner must notify the Office if this is **not** a correct interpretation of the statement contained in the instant petition.

The application is being referred to the Office of Initial Patent Examination (OIPE) for further processing.

Telephone inquires related to this decision should be directed to the undersigned at (703) 305-9220. Telephone inquiries related to OIPE processing should be directed to their hotline at (703) 308-1202.

Sherry D. Brinkley
Petitions Examiner
Office of Petitions
Office of the Deputy Commissioner
for Patent Examination Policy

UNITED STATES PATENT AND TRADEMARK OFFICE

Commissioner for Patents
United States Patent and Trademark Office
P.O. Box 1450
Alexandria, VA 22313-1450
www.uspto.gov

CANTOR COLBURN, LLP
55 GRIFFIN ROAD SOUTH
BLOOMFIELD CT 06002

COPY MAILED

JAN 21 2005

OFFICE OF PETITIONS

In re Application of :
Simon Raab et al :
Application No. 10/642,427 : ON PETITION
Filed: August 15, 2003 :
Attorney Docket No. FAO-0149 :

This is a decision on the petition, filed January 21, 2005, under 37 CFR 1.313(c)(2) to withdraw the above-identified application from issue after payment of the issue fee.

The petition is **GRANTED**.

The above-identified application is withdrawn from issue for consideration of a submission under 37 CFR 1.114 (request for continued examination). See 37 CFR 1.313(c)(2).

Petitioner is advised that the issue fee paid on December 8, 2004 in the above-identified application cannot be refunded. If, however, the above-identified application is again allowed, petitioner may request that it be applied towards the issue fee required by the new Notice of Allowance.[1]

Telephone inquiries should be directed to the undersigned at (571) 272-3208.

The examiner of Technology Center AU 2859 will consider the request for continued examination under 37 CFR 1.114.

Karen Creasy

Karen Creasy
Petitions Examiner
Office of Petitions
Office of the Deputy Commissioner
for Patent Examination Policy

---

[1] The request to apply the issue fee to the new Notice may be satisfied by completing and returning the new Issue Fee Transmittal Form PTOL-85(b), which includes the following language thereon: "Commissioner for Patents is requested to apply the Issue Fee and Publication Fee (if any) or re-apply any previously paid issue fee to the application identified above." Petitioner is advised that, whether a fee is indicated as being due or not, the Issue Fee Transmittal Form **must** be completed and timely submitted to avoid abandonment. Note the language in bold text on the first page of the Notice of Allowance and Fee(s) Due (PTOL-85).

UNITED STATES PATENT AND TRADEMARK OFFICE

COMMISSIONER FOR PATENTS
UNITED STATES PATENT AND TRADEMARK OFFICE
P.O. BOX 1450
ALEXANDRIA, VA 22313-1450
www.uspto.gov

CANTOR COLBURN, LLP
55 GRIFFIN ROAD SOUTH
BLOOMFIELD, CT 06002

COPY MAILED

JAN 20 2006

OFFICE OF PETITIONS

In re Patent No. 6,973,734	:	
Issued: December 13, 2005	:	
Application No. 10/642,427	:	NOTICE
Filed: August 15, 2003	:	
Attorney Docket No. FAO-0149	:	

This is a notice regarding your request for acceptance of a fee deficiency submission under 37 CFR 1.28. On September 1, 1998, the Court of Appeals for the Federal Circuit held that 37 CFR 1.28(c) is the sole provision governing the time for correction of the erroneous payment of the issue fee as a small entity. **See DH Technology v. Synergystex International, Inc. 154 F.3d 1333, 47 USPQ2d 1865 (Fed. Cir. Sept. 1, 1998).**

The Office no longer investigates or rejects original or reissue applications under 37 CFR 1.56. **1098 Off. Gaz. Pat. Office 502 (January 3, 1989)**. Therefore, nothing in this Notice is intended to imply that an investigation was done.

Your fee deficiency submission under 37 CFR 1.28 is hereby **ACCEPTED**.

Inquiries related to this communication should be directed to the Office of Petitions Staff at (571) 272-3282.

Sherry D. Brinkley
Petitions Examiner
Office of Petitions
Office of the Deputy Commissioner
for Patent Examination Policy

UNITED STATES PATENT AND TRADEMARK OFFICE

Commissioner for Patents
United States Patent and Trademark Office
P.O. Box 1450
Alexandria, VA 22313-1450
www.uspto.gov

THOMAS W. ADAMS
RENNER, OTTO, BOISELLE & SKLAR, LLP
NINETEENTH FLOOR
1621 EUCLID AVENUE
CLEVELAND, OH 44115

COPY MAILED

JUN 09 2008

In re Application of :
Roger Moulton, et al. :
Application No. 10/642,438 : DECISION ON PETITION
Filed: August 15, 2003 :
Attorney Docket No. SOU747/4-8US :

This is a decision on the petition under the unintentional provisions of 37 CFR 1.137(b), filed November 27, 2007, to revive the above-identified application.

The petition is **GRANTED**.

The application became abandoned for failure to reply in a timely manner to the non-final Office action mailed, December 26, 2006, which set a shortened statutory period for reply of three (3) months. No extensions of time under the provisions of 37 CFR 1.136(a) were obtained. Accordingly, the application became abandoned on March 27, 2007.

The petition satisfies the requirements of 37 CFR 1.137(b) in that petitioner has supplied (1) the reply in the form of an amendment, (2) the petition fee of $770, and (3) a proper statement of unintentional delay.

It is not apparent whether the statement of unintentional delay was signed by a person who would have been in a position of knowing that the entire delay in filing the required reply from the due date for the reply until the filing of a grantable petition pursuant to 37 CFR 1.137(b) was unintentional. Nevertheless, in accordance with 37 CFR 10.18, the statement is accepted as constituting a certification of unintentional delay. However, in the event that petitioner has no knowledge that the delay was unintentional, petitioner must make such an inquiry to ascertain that, in fact, the delay was unintentional. If petitioner discovers that the delay was intentional, petitioner must so notify the Office.

There is no indication that the person signing the instant petition was ever given a power of attorney or authorization of agent to prosecute the above-identified application. In accordance

with 37 CFR 1.34(a), the signature appearing on the petition shall constitute a representation to the United States Patent and Trademark Office that he/she is authorized to represent the particular party in whose behalf he/she acts. However, if petitioner desires to receive future correspondence regarding this application, the appropriate power of attorney or authorization of agent must be submitted. A courtesy copy of this decision is being mailed to petitioner. Nevertheless, all future correspondence regarding this application file will be directed solely to the address of record until otherwise instructed.

Telephone inquiries concerning this decision should be directed to undersigned at (571) 272-1642.

This application is being referred to Technology Center AU 1625 for appropriate action by the Examiner in the normal course of business on the reply received November 27, 2007.

April M. Wise
Petitions Examiner
Office of Petitions

Cc: DANA M. GORDON
FOLEY HOAG, LLP
155 SEAPORT BOULEVARD
BOSTON, MA 02210

UNITED STATES PATENT AND TRADEMARK OFFICE

Commissioner for Patents
United States Patent and Trademark Office
P.O. Box 1450
Alexandria, VA 22313-1450
www.uspto.gov

ARRAY BIOPHARMA, INC.
3200 WALNUT STREET
BOULDER CO 80301

MAILED

JUN 15 2009

OFFICE OF PETITIONS

In re Patent No. 7,501,427	:	
Wallace et al.	:	DECISION ON
Issue Date: March 10, 2009	:	REQUEST FOR RECONSIDERATION
Application No. 10/642,440	:	OF
Filed: August 14, 2003	:	PATENT TERM ADJUSTMENT
Attorney Docket No. 102-02-US	:	

This is in response to the "REQUEST FOR RECONSIDERATION OF PATENT TERM ADJUSTMENT UNDER 37 CFR §1.705(d)," filed May 6, 2009, requesting that the patent term adjustment determination for the above-identified patent be changed from six hundred ninety-five (695) days to one thousand ninety-three(1093) days.

The request for reconsideration of patent term adjustment is **DISMISSED**.

On March 10, 2009, the above-identified application matured into U.S. Patent No. 7,501,427 with a patent term adjustment of 695 days. This request for reconsideration of patent term adjustment (including the required fee) was timely filed within two months of the issue date of the patent. See 1.705(d).

Patentees maintain that the patent term methodology identified and explained in Wyeth v. Dudas, 580 F. Supp. 2d 138, 88 U.S.P.Q. 2d 1538 (D.D.C. 2008) governs the USPTO calculation of the patent term adjustment for this patent. Therefore, patentees maintain that the patent term adjustment should have been 1093 days.

Patentees argue that the period of adjustment due to the Three Year Delay by the Office, pursuant to 37 CFR § 1.703(b), is 939 days. This 939 day period is calculated based on the application having been filed under 35 U.S.C. §111(a) on August 14, 2003, and the patent having not issued until March 10, 2009, three years and 939 days later.

Patentees assert that in addition to this 939 day period, they are entitled to a period of adjustment due to examination delay, pursuant to 37 CFR §1.702(a), totalling 598 days. This 598 day period is the sum of:

- a period of delay of 398 days for the failure by the Office to mail at least one of a notification under 35 U.S.C. 132 not later than fourteen months after the date on which the application was filed under 35 U.S.C. 111(a), pursuant to § 1.702(a)(1);
- a period of delay of 37 days for the failure by the Office to respond to a reply under 35 U.S.C. 132 not later than four months after the date on which the reply was filed, pursuant to § 1.702(a)(2);
- a period of delay of 4 days for the failure by the Office to respond to a reply under 35 U.S.C. 132 not later than four months after the date on which the reply was filed, pursuant to § 1.702(a)(2);
- a period of delay of 159 days for the failure to issue a patent not later than four months after the date on which the issue fee was paid under 35 U.S.C. 151 and all outstanding requirements were satisfied, pursuant to § 1.702(a)(4).

The Office does not dispute bullets 1, 2, and 4 above. The Office disputes bullet 3 above. Bullet 3 above pertains to an Office action mailed on August 20, 2007. Patentees state that on May 16, 2007, patentees filed a response to a non-final Office action and the examiner mailed a final rejection on August 20, 2007. Patentees argue this action is grounds for finding additional Office delay of 4 days.

Patentees are informed that this argument is untimely presented and will not be addressed. [1] 35 U.S.C. 154(b) provides for patent term adjustment for examination delay. Pursuant to 35 U.S.C. 154(b)(3)(B) and implementing regulation 37 C.F.R. § 1.705, an applicant shall receive an initial determination of patent term adjustment with the mailing of the Notice of Allowance and shall be given one opportunity to request reconsideration of that

[1] Patentees are reminded that the Office may take four months to respond to a reply under 35 U.S.C. 13237 CFR 1.702(a)(2).

determination by way of filing of an application for patent term adjustment prior to the payment of the issue fee.

On March 5, 2008, the Office mailed a Determination of Patent Term Adjustment under 35 U.S.C. 154(b) in the above-identified application. The Notice stated that the patent term adjustment to date is 311 days. The Office delay of 4 days asserted, if warranted, should have been included in this initial determination. PALM records indicate that the issue fee payment was received in the Office on June 2, 2008. No filing of an application for patent term adjustment preceded the payment of the issue fee. The period for filing an application for patent term adjustment requesting reconsideration of the initial determination of patent term adjustment at the time of mailing of the notice of allowance ended June 2, 2008. Accordingly, the request to reconsider the initial determination of patent term adjustment is untimely filed under 1.705(b).

Consideration under 1.705(d) is not appropriate. As stated in MPEP 2730, 1.703(d) provides that:

> If there is a revision to the patent term adjustment indicated in the notice of allowance, the patent will indicate the revised patent term adjustment. If the patent indicates or should have indicated a revised patent term adjustment, any request for reconsideration of the patent term adjustment indicated in the patent must be filed within two months of the date the patent issued and must comply with the requirements of paragraphs (b)(1) and (b)(2) of this section. Any request for reconsideration under this section that raises issues that were raised, or could have been raised, in an application for patent term adjustment under paragraph (b) of this section shall be dismissed as untimely as to those issues.

The argument raised in bullet 3 should have been timely raised on application for patent term adjustment under § 1.705(b).

Thus, the period of adjustment due to examination delay, pursuant to 37 CFR §1.702(a), totals 594 days.

Under 37 CFR § 1.703(f), applicants are entitled to a period of patent term adjustment equal to the period of delays based on the grounds set forth in 37 CFR §1.702 reduced by the period of time equal to the period of time during which applicants failed

to engage in reasonable efforts to conclude prosecution pursuant to 37 CFR §1.704. In other words, the period of Office delay reduced by the period of applicant delay. The period of reduction of 244 days for applicant delay is not in dispute. Patentees assert that the total period of Office delay is the sum of the period of Three Years Delay (939 days) and the period of Examination Delay (594 days, as discussed above) to the extent that these periods of delay are not overlapping.

Further, patentees articulate the periods of overlap as follows:

> Patentees contend that the full 37 days for the failure by the Office to respond to a reply under 35 U.S.C. 132 not later than four months after the date on which the reply was filed, pursuant to § 1.702(a)(2) (December 11, 2006 to January 16, 2007) overlaps with a portion of the Three Year delay period (August 15, 2006 to March 10, 2009). Patentees assert that this overlapping period is the entire 37 days from December 11, 2006 to January 16, 2007.
>
> Patentees contend that the full 159 days for the failure to issue a patent not later than four months after the date on which the issue fee was paid under 35 U.S.C. 151 and all outstanding requirements were satisfied, pursuant to § 1.702(a)(4) (October 3, 2008 to March 10, 2009) overlaps with a portion of the Three Year delay period (August 15, 2006 to March 10, 2009). Patentees assert that this overlapping period is the entire 159 days from October 3, 2008 to March 10, 2009.
>
> Thus, according to patentees the total period of overlap is 196 days. (This figure does not take the asserted 4 day additional period of Office delay into consideration. It is noted that patentees argue that the asserted 4 day additional period overlaps with a portion of the Three Year delay period.)
>
> Not including the asserted 4 day additional period of Office delay into consideration, patentees submit that the total period of Office Delay is 1337 days, which is the sum of the period of Three Year Delay (939 days) and the period of Examination Delay (594 days), reduced by the period of overlap (196 days).

As such, not including the asserted 4 day additional period of Office delay into consideration, patentees assert entitlement to a patent term adjustment of 1093 days (939 +594 reduced by 196 overlap -244 for applicant delay).

The Office agrees that the patent issued 3 years and 939 days after its filing date. The Office agrees that the actions detailed above were not taken within the specified time frames, and thus, the entry of period of adjustment of 594 days is correct. At issue is whether patentees should accrue 743 (adjusted for overlap, per patentees' calculations, not considering the asserted 4 day additional period of Office delay) days of patent term adjustment for the Office taking in excess of three years to issue the patent, as well as, 594 days, not considering the asserted 4 day additional period of Office delay, for Office failure to take certain actions within a specified time frames (or examination delay).

The Office contends that the 939 days overlaps with the 594 days. Patentees' interpretation of the period of overlap has been considered and found to be incorrect. Patentees' calculation of the period of overlap is inconsistent with the Office's interpretation of this provision. 35 U.S.C. 154(b)(2)(A) limits the adjustment of patent term, as follows:

> to the extent that the periods of delay attributable to grounds specified in paragraph (1) overlap, the period of any adjustment granted under this subsection shall not exceed the actual number of days the issuance of the patent was delayed.

Likewise, 37 CFR 1.703(f) provides that:

> To the extent that periods of delay attributable to the grounds specified in §1.702 overlap, the period of adjustment granted under this section shall not exceed the actual number of days the issuance of the patent was delayed.

As explained in *Explanation of 37 CFR 1.703(f) and of the United States Patent and Trademark Office Interpretation of 35 U.S.C. 154(b)(2)(A)*, 69 Fed. Reg. 34283 (June 21, 2004), the Office interprets 35 U.S.C. 154(b)(2)(A) as permitting either patent term adjustment under 35 U.S.C. 154(b)(1)(A)(i)-(iv), or patent term adjustment under 35 U.S.C. 154(b)(1)(B), but not as

permitting patent term adjustment under both 35 U.S.C. 154(b)(1)(A)(i)-(iv) and 154(b)(1)(B). Accordingly, the Office implements the overlap provision as follows:

> If an application is entitled to an adjustment under 35 U.S.C. 154(b)(1)(B), the entire period during which the application was pending (except for periods excluded under 35 U.S.C. 154(b)(1)(B)(i)-(iii)), and not just the period beginning three years after the actual filing date of the application, is the period of delay under 35 U.S.C. 154(b)(1)(B) in determining whether periods of delay overlap under 35 U.S.C. 154(b)(2)(A). Thus, any days of delay for Office issuance of the patent more than 3 years after the filing date of the application, which overlap with the days of patent term adjustment accorded prior to the issuance of the patent will not result in any additional patent term adjustment. See 35 U.S.C. 154(b)(1)(B), 35 U.S.C. 154(b)(2)(A), and 37 CFR § 1.703(f). See *Changes to Implement Patent Term Adjustment Under Twenty Year Term; Final Rule*, 65 Fed. Reg. 54366 (Sept. 18, 2000). See also *Revision of Patent Term Extension and Patent Term Adjustment Provisions; Final Rule*, 69 Fed. Reg. 21704 (April 22, 2004), 1282 Off. Gaz. Pat. Office 100 (May 18, 2004). See also *Explanation of 37 CFR 1.703(f) and of the United States Patent and Trademark Office Interpretation of 35 U.S.C. 154(b)(2)(A)*, 69 Fed. Reg. 34283 (June 21, 2004).

The current wording of § 1.703(f) was revised in response to the misinterpretation of this provision by a number of applicants. The rule was slightly revised to more closely track the corresponding language of 35 U.S.C. 154(b)(2)(A). The relevant portion differs only to the extent that the statute refers back to provisions of the statute whereas the rule refers back to sections of the rule. This was not a substantive change to the rule nor did it reflect a change of the Office's interpretation of 35 U.S.C. 154(b)(2)(A). As stated in the *Explanation of 37 CFR 1.703(f) and of the United States Patent and Trademark Office Interpretation of 35 U.S.C. 154(b)(2)(A)*, the Office has consistently taken the position that if an application is entitled to an adjustment under the three-year pendency provision of 35 U.S.C. 154(b)(1)(B), the entire period during which the application was pending before the Office (except for periods excluded under 35 U.S.C. 154(b)(1)(B)(i)-(iii)), and not just the period beginning three years after the actual filing

date of the application, is the relevant period under 35 U.S.C. 154(b)(1)(B) in determining whether periods of delay "overlap" under 35 U.S.C. 154(b)(2)(A).

This interpretation is consistent with the statute. Taken together the statute and rule provide that to the extent that periods of delay attributable to grounds specified in 35 U.S.C. 154(b)(1) and in corresponding §1.702 overlap, the period of adjustment granted shall not exceed the actual number of days the issuance of the patent was delayed. The grounds specified in these sections cover the A) guarantee of prompt Patent and Trademark Office responses, B) guarantee of no more than 3 year application pendency, and C) guarantee or adjustments for delays due to interference, secrecy orders and appeals. A section by section analysis of 35 U.S.C. 154(b)(2)(A) specifically provides that:

> Section 4402 imposes limitations on restoration of term. In general, pursuant to [35 U.S.C.] 154(b)(2)(A)-(C), total adjustments granted for restorations under [35 U.S.C. 154](b)(1) are reduced as follows: (1) To the extent that there are multiple grounds for extending the term of a patent that may exist simultaneously (e.g., delay due to a secrecy order under [35 U.S.C.] 181 and administrative delay under [35 U.S.C.] 154(b)(1)(A)), the term should not be extended for each ground of delay but only for the actual number of days that the issuance of a patent was delayed; See 145 Cong. Rec. S14,718[2]

As such, the period for over 3 year pendency does not overlap only to the extent that the actual dates in the period beginning three years after the date on which the application was filed overlap with the actual dates in the periods for failure of the Office to take action within specified time frames. In other words, consideration of the overlap does not begin three years after the filing date of the application.

In this instance, the relevant period under 35 U.S.C. 154(b)(1)(B) in determining whether periods of delay "overlap" under 35 U.S.C. 154(b)(2)(A) is the entire period during which

---

[2] The AIPA is title IV of the Intellectual Property and Communications Omnibus Reform Act of 1999 (S. 1948), which was incorporated and enacted as law as part of Pub. L. 106-113. The Conference Report for H.R. 3194, 106th Cong. 1st Sess. (1999), which resulted in Pub. L. 106-113, does not contain any discussion (other than the incorporated language) of S. 1948. A section-by-section analysis of S. 1948, however, was printed in the Congressional Record at the request of Senator Lott, See 145 Cong. Rec. S14,708-26 (1999)(daily ed. Nov. 17, 1999).

the application was pending before the Office, August 14, 2003 to March 10, 2009. (There were no periods excluded under 35 U.S.C. 154(b)(1)(B)(i)-(iii)). 594 days of patent term adjustment were accorded prior to the issuance of the patent for the Office failing to respond within specified time frames during the pendency of the application. The Office took 14 months and 398 days to issue a first Office action, four months and 37 days to mail a non-final Office action in response to response filed August 10, 2006, and 4 months and 159 days to issue the patent once all requirements were met. Otherwise, the Office took all actions set forth in 37 C.F.R. § 1.702(a) within the prescribed timeframes. Nonetheless, given the initial 594 days of Office delay and the time allowed within the timeframes for processing and examination, the patent issued, three years and 939 days after its filing date. The period of delay of 939 days attributable to the delay in the issuance of the patent overlaps with the adjustment of 594 days attributable to grounds specified in § 1.702(a)(1),(2), and (4). 939 days is determined to be the actual number of days issuance of the patent was delayed.

Accordingly, at issuance, the Office properly entered 345 additional days of patent term adjustment for the Office taking in excess of 3 years to issue the patent for a total of 939 days of Office delay.

In view thereof, the Office affirms that the correct revised determination of patent term adjustment at the time of the issuance of the patent is 695 days.

The Office acknowledges submission of the $200.00 fee set forth in 37 CFR 1.18(e). No additional fees are required.

Telephone inquiries specific to this matter should be directed to Shirene Willis Brantley, Senior Petitions Attorney, at (571) 272-3230.

Nancy Johnson
Senior Petitions Attorney
Office of the Deputy Commissioner
for Patent Examination Policy

United States
Patent And
Trademark Office

P.O. Box 1450, Alexandria, Virginia 22313-1450 – www.uspto.gov

PETITION DECISION

04/09/04

Michael H. Brodowski
Testa, Hurwitz, & Thibeault, LLP
High Street Tower
125 High Street
Boston, MA 02110

Dear Applicant:

The Box PG Pub replacement drawings for application number 10/642452 received on 01/23/04 by the U. S. Patent and Trademark Office will be included for patent publication.

Telephone inquiries should be directed to Kaletus King, Office of Pre-Grant Publication 703 605-4283.

Kaletus King

Signature of Reviewer, Office of Pre-Grant Publication

UNITED STATES PATENT AND TRADEMARK OFFICE

Commissioner for Patents
United States Patent and Trademark Office
P.O. Box 1450
Alexandria, VA 22313-1450
www.uspto.gov

FAY KAPLUN & MARCIN, LLP
150 BROADWAY, SUITE 702
NEW YORK NY 10038

MAILED

JUN 02 2010

OFFICE OF PETITIONS

In re Patent No. 6,988,994 :
Issue Date: January 24, 2006 :
Application No. 10/642,459 : ON PETITION
Filed: August 14, 2003 :
Attorney Docket No. **50124/01301** :

This is a decision on the petition under 37 CFR 1.378(c), filed March 31, 2010, to accept the unintentionally delayed payment of a maintenance fee for the above-identified patent.

The petition is **GRANTED**.

This patent expired at midnight January 24, 2010, for failure to pay the 3½ year maintenance fee. Since this petition was submitted within twenty-four months after the six-month grace period provided in 37 CFR 1.362(e), the petition was timely filed under the provisions of 37 CFR 1.378(c).

The maintenance fee is hereby accepted and the above-identified patent is reinstated as of the mail date of this decision.

Telephone inquiries concerning this decision should be directed to JoAnne Burke at (571) 272-4584.

JoAnne Burke
Petitions Examiner
Office of Petitions

UNITED STATES PATENT AND TRADEMARK OFFICE

Commissioner for Patents
United States Patent and Trademark Office
P.O. Box 1450
Alexandria, VA 22313-1450
www.uspto.gov

Williams Mullen
222 Central Park Avenue
Suite 1700
Virginia Beach VA 23462

MAILED

JUN 30 2010

OFFICE OF PETITIONS

In re Application of :
Jenkins :
Application No. 10/642,464 : ON APPLICATION FOR
Filed: August 15, 2003 : PATENT TERM ADJUSTMENT
Atty Docket No. 052677.0005 :

This is in response to the REQUEST FOR PATENT TERM ADJUSTMENT DETERMINATION PURSUANT TO 37 C.F.R. § 1.705, filed April 27, 2010. Applicant submits that the correct patent term adjustment to be indicated on the patent is one thousand eight hundred fifteen (1815) days, not five hundred fifty-two (552) days as calculated by the Office as of the mailing of the initial determination of patent term adjustment. Applicant requests this correction solely on the basis that the Office will take in excess of three years to issue this patent.

As the instant application for patent term adjustment requests reconsideration of the patent term adjustment as it relates to the Office's failure to issue the patent within 3 years of the filing date, the application for patent term adjustment under 37 CFR 1.705(b) is **DISMISSED as PREMATURE**.

Knowledge of the actual date the patent issues is required to calculate the amount, if any, of additional patent term patentee is entitled to for Office failure to issue the patent within 3 years. See § 1.702(b). The computer will not undertake the § 1.702(b) calculation until the actual date of issuance of the patent has been determined. Likewise, the computer will not calculate any further Office delay under § 1.702(a)(4) or applicant delay under § 1.704(c)(10) until the actual date of issuance of the patent has been determined. As such, the Office can not make a determination on the correctness of the patent term adjustment until the patent has issued.

Requesting reconsideration of the patent term adjustment to be indicated on the patent under 37 CFR 1.705(b) based on the initial determination of patent term adjustment and a projected issuance date of the patent is premature. Accordingly, it is appropriate to dismiss as premature such a request.

Rather than file an application for patent term adjustment under 37 CFR 1.705(b) contesting the 37 CFR 1.702(b) calculation at the time of the mailing of the notice of allowance, applicant is advised that he may wait until the time of the issuance of the patent and file a request for reconsideration of the patent term adjustment pursuant to 37 CFR 1.705(d). As the USPTO does not calculate the amount of time earned pursuant to 37 CFR 1.702(b) until the time of the issuance of the patent, the Office will consider any request for reconsideration of the patent term adjustment due to an error in the calculation of 37 CFR 1.702(b) to be timely if the request for reconsideration is filed within two months of the issuance of the patent. However, as to all other bases for contesting the initial determination of patent term adjustment received with the notice of allowance, applicant must timely file an application for patent term adjustment prior to the payment of the issue fee[1].

The Office acknowledges submission of the $200.00 fee set forth in 37 CFR 1.18(e) for consideration of the application for patent term adjustment under 37 CFR 1.705(b).

Any request for reconsideration of the patent term adjustment indicated on the patent must be timely filed within 2 months after issuance pursuant to 37 CFR 1.705(d) and must include payment of the required fee under 37 CFR 1.18(e).

---

[1] For example, if applicant disputes both the calculation of patent term adjustment under 37 CFR 1.702(a)(1) for Office failure to mail a first Office action or notice of allowance not later than fourteen months after the date on which the application was filed and under 37 CFR 1.702(b) for Office failure to issue a patent within three years of the actual filing date of the application, then applicant must still timely file an application for patent term adjustment prior to the payment of the issue fee to contest the calculation of Office delay in issuing a first Office action or notice of allowance. See 37 CFR 1.705(b) and 35 U.S.C. 154(b)(3)(B). A dispute as to the calculation of the §1.702(a)(1) period raised on request for reconsideration of patent term adjustment under 37 CFR 1.705(d) will be dismissed as untimely filed.

The file does not indicate a change of address has been submitted, although the address given on the petition differs from the address of record. If appropriate, a change of address should be filed in accordance with MPEP 601.03. A courtesy copy of this decision is being mailed to the address given on the petition; however, the Office will mail all future correspondence solely to the address of record.

The Office of Data Management has been advised of this decision. This application is being referred to the Office of Data Management for issuance of the patent.

Telephone inquiries specific to this decision should be directed to the undersigned at (571) 272-3230.

Shirene Willis Brantley

Shirene Willis Brantley
Senior Petitions Attorney
Office of Petitions

CC: GREGORY STEPHENS
WILLIAMS MULLEN PC
PO BOX 12109
RESEARCH TRIANGLE PARK, NC 27709-3646

UNITED STATES PATENT AND TRADEMARK OFFICE

Commissioner for Patents
United States Patent and Trademark Office
P.O. Box 1450
Alexandria, VA 22313-1450
www.uspto.gov

COPY MAILED

MAY 20 2008

OFFICE OF PETITIONS

INTEL/BLAKELY
1279 OAKMEAD PARKWAY
SUNNYVALE CA 94085-4040

In re Application of :
Dmitrii Loukianov :
Application No. 10/642,469 : ON PETITION
Filed: August 14, 2003 :
Attorney Docket No. 042390.P16360 :

This is a decision on the petition under 37 CFR 1.137(b), filed February 1, 2008, to revive the above-identified application.

The petition is **GRANTED**.

The above-identified application became abandoned for failure to submit a response in a timely manner to the non-final Office action mailed August 3, 2007, which set a shortened statutory period for reply of three (3) months. Accordingly, by operation of law, the above-identified application became abandoned on November 4, 2007.

The petition satisfies the conditions for revival pursuant to the provisions of 37 CFR 1.137(b) in that (1) the reply in the form of an amendment; (2) the petition fee of $1,540; and (3) the required statement of unintentional delay have been received. Accordingly, the amendment is accepted as having been unintentionally delayed.

Telephone inquiries concerning this decision should be directed to Carl Friedman at (571) 272-6842.

The application file is being referred to Technology Center Art unit 2616 for consideration of the amendment in due course.

Carl Friedman
Petitions Examiner
Office of Petitions

UNITED STATES PATENT AND TRADEMARK OFFICE

Commissioner for Patents
United States Patent and Trademark Office
P.O. Box 1450
Alexandria, VA 22313-1450
www.uspto.gov

BRINKS HOFER GILSON & LIONE
P.O. BOX 10395
CHICAGO, ILLINOIS 60610

In re Application of:
Osborne, Thomas A., et al.
Serial No. 10/642,513
Filed: August 15, 2003
Docket: 8627-183
Title: STENT AND METHOD OF FORMING A STENT WITH INTEGRAL BARBS

DECISION ON PETITION
UNDER 37 CFR § 1.181

This is a decision on the petition filed on December 26, 2006 under 37 CFR § 1.181. Petitioner requests that the finality of the rejection filed on October 10, 2006 be withdrawn as premature.

The petition is dismissed.

Background

The examiner mailed a Final Rejection on October 10, 2006 rejecting claims 45, 46, 48-50, 53, 58 and 60-62 under 35 U.S.C. § 102(e) as anticipated by Chuter. On December 13, 2006 the petitioners filed an Amendment After Final, raising the question of prematureness of the final rejection. On December 26, 2006 the examiner entered an Advisory Action finding that the request for reconsideration did not place the application in condition for allowance. The examiner noted that "although the exact text of the claims are not the same as claims prior to the RCE, the claims as a whole describe the same invention, and the previously applied reference reads on the new claims." Also on December 26, 2006 the petitioners filed the present petition requesting that the finality of the October 10, 2006 rejection be withdrawn as premature, for the rejected claims were not "drawn to the same invention in the earlier application."

On January 10, 2007 the applicants entered a second Request for Continuing Examination with the corresponding fees under 37 CFR §1.17(e). The RCE was entered and the applicants were thereby able to amend claims 45 and 58 and provided new arguments for the novelty of the rejected claims. On January 29, 2007 the examiner mailed a Non-Final Rejection of the same claims under 35 U.S.C. §102(b) as being anticipated by Anderson. (These same claims were previously rejected as being anticipated by Chuter.) On April 5, 2007 the applicants filed another amendment, discussing the examiner's rejections in light of Anderson.

Discussion

The present petition, filed on December 26, 2006 requests the withdrawal of the finality of the Office Action filed on October 10, 2006 as premature with regards to claims 45, 46, 48-50, 53, 58, and 60-62. However, in response to the December 26, 2006 Advisory Action, the applicants filed a Request for Continuing Examination on January 10, 2007.

With respect to a Request for Continuing Examination, 37 CFR §1.114(d) states:

> If an applicant timely files a submission and fee set forth in § 1.17(e), the Office will withdraw the finality of any Office action and the submission will be entered and considered.

A review of the record indicates that the applicants timely filed a submission and paid the fees set forth in §1.17(e). Therefore the Request for Continuing Examination was entered, the finality of the Office Action filed on October 10, 2006 was operatively withdrawn, and the applicants were able to argue the merits of the examiner's rejections in subsequent amendments.

Decision

In view that the contested claims are now pending before the examiner, the petitioners' request for relief is moot. Therefore, the petition to withdraw the finality of the October 10, 2006 Office Action is dismissed as moot.

PETITION DISMISSED.

Any inquiry regarding this decision should be directed to Allan N. Shoap, Special Programs Examiner, at (571) 272-4514.

Karen M. Young

for Frederick R. Schmidt, Director
Technology Center 3700

UNITED STATES PATENT AND TRADEMARK OFFICE

COMMISSIONER FOR PATENTS
UNITED STATES PATENT AND TRADEMARK OFFICE
P.O. BOX 1450
ALEXANDRIA, VA 22313-1450
www.uspto.gov

LERNER, DAVID, LITTENBERG, KRUMHOLZ & MENTLIK, LLP
600 SOUTH AVENUE WEST
WESTFIELD, NJ 07090

COPY MAILED

JUN 29 2005

OFFICE OF PETITIONS

In re Application of	:	
Errico, et al.	:	
Filed: August 15, 2003	:	ON PETITION
Application No. 10/642,523	:	
Atty. Dkt. No.: F-245	:	

This decision is in response to the "PETITION IN RESPONSE TO NOTICE OF OMITTED ITEMS," filed April 21, 2005 to accord the above-identified application a filing date of August 15, 2003 and entry of pages 25-27 of the specification.

The application was filed August 15, 2003. The Notice indicated that the application had been accorded a filing date but that pages 25-27 of the specification appeared to have been omitted from the application as filed.

In response, the present petition was filed wherein petitioners argue that the application as deposited included pages 25-27 of the specification. Petitioners have included as proof of mailing and proof of receipt of the pages in question a return postcard date stamped by the Office on August 15, 2003. A copy of pages 25-27 of the specification purportedly filed with the application on August 15, 2003 was also supplied.

The original pages in question submitted with the application papers have not been located. However, in view of the evidence presented, the petition to accord the application a filing date of August 15, 2003 is GRANTED.

Since the original pages 25-27 of the specification cannot be located in the Office, the copy of said pages supplied with the instant petition will be used for examination purposes.

No petition fee is due in connection with this matter. Petitioners may request a refund of the previously submitted $400.00 petition fee by writing to the Finance Office, Refund Section. A copy of this decision should accompany any request for refund.

This application will be returned to the Office of Initial Patent Examination for further processing with a filing date of August 15, 2003.

Telephone inquiries related to this decision may be directed to the undersigned at (571) 272-3205.

Alesia M. Brown
Petitions Attorney
Office of Petitions

UNITED STATES PATENT AND TRADEMARK OFFICE

Commissioner for Patents
United States Patent and Trademark Office
P.O. Box 1450
Alexandria, VA 22313-1450
www.uspto.gov

SPINE MP
LERNER, DAVID, et al.
600 SOUTH AVENUE WEST
WESTFIELD, NJ 07090

COPY MAILED

APR 15 2009

OFFICE OF PETITIONS

In re Patent No: 7,223,290 :
Issue Date: May 29, 2007 :
Application No. 10/642,527 : DECISION DISMISSING PETITION
Filed: August 15, 2003 : UNDER 37 CFR 1.78(a)(3)
Attorney Docket No. **SPINE 3.0-437 PPPPPCON XV** :

This is a decision on the petition under 37 CFR 1.78(a)(3), filed February 2, 2009, to accept an unintentionally delayed claim under 35 U.S.C. §120 for the benefit of priority to prior-filed nonprovisional Applications.

The petition is **DISMISSED**.

A petition for acceptance of a claim for late priority under 37 CFR 1.78(a)(3) is only applicable to those applications filed on or after November 29, 2000 and after the expiration of the period specified in 37 CFR 1.78(a)(2)(ii). In addition, the petition under 37 CFR 1.78(a)(3) must be accompanied by:

(1) the reference required by 35 U.S.C. § 120 and 37 CFR 1.78(a)(2)(i) of the prior-filed application, unless previously submitted;
(2) the surcharge set forth in § 1.17(t); and
(3) a statement that the entire delay between the date the claim was due under 37 CFR 1.78(a)(2)(ii) and the date the claim was filed was unintentional. The Director may require additional information where there is a question whether the delay was unintentional.

The amendment as drafted is unacceptable and, therefore, is not considered a proper reference under 37 CFR 1.78(a)(2)(i). In this regard, the amendment is physically part of the petition and, as such, does not comply with 37 CFR 1.121, 1.52, or 1.4(c). Note that 37 CFR 1.121 states that amendments are made by filing a paper, in compliance with § 1.52, directing that specified amendments be made. The pertinent section of 37 CFR 1.52 states that the claim (in this case, the claim for priority), must commence on a separate physical sheet. 37 CFR 1.4(c) states that each distinct subject must be

contained in a separate paper since different matters may be considered by different branches of the United States Patent and Trademark Office.

Before the petition can be granted, petitioner must submit a substitute amendment in compliance with the aforementioned rules, along with a renewed petition under 37 CFR 1.78(a)(3).[1]

Further correspondence with respect to this matter should be addressed as follows:

By mail: Mail Stop PETITIONS
Commissioner for Patents
Post Office Box 1450
Alexandria, VA 22313-1450

By hand: Customer Service Window
Mail Stop Petitions
Randolph Building
401 Dulany Street
Alexandria, VA 22314

By fax: (571) 273-8300
ATTN: Office of Petitions

Any questions concerning this matter may be directed to Monica A. Graves at (571) 272-7253.

Sherry D. Brinkley
Petitions Examiner
Office of Petitions

[1] The claim for priority may also be made in an Application Data Sheet in compliance with 37 CFR 1.121 and 37 CFR 1.76(b)(5).

UNITED STATES DEPARTMENT OF COMMERCE
Patent and Trademark Office
ASSISTANT SECRETARY OF COMMERCE AND
COMMISSIONER OF PATENTS AND TRADEMARKS
Washington, DC 20231

5/11/09

Patent No. :7223290
Inventor(s) :Joseph P. Errico
Issued : 5/11/2009
Title : Axially Compressible Artificial Intervertebral Disc Having A Captured Ball And Socket Joint With A Solid Ball And Compression Locking Post
Atty.doc./File No.

Request for Certificates of Correction

Consideration has been given to your request for the issuance of a Certificate of Correction, for the above – identified patent under the provisions of CFR 1.322.

Inspection of the application for the patent reveals item [63] is printed in accordance with the record and please show evidence of an amendment or document. Therefore being no fault on the Patent and Trademark Office, It has no authority to issue a certificate of correction under the provision of 1.322.

In view of the forgoing, your request in this matter, is hereby denied.

Future written correspondence concerning this matter should be filed and directed to Decisions & Certificates of Correction Branch.

Henry Randall
Mary Diggs
Decisions & Certificates
of Correction Branch
(703) 308-9390 Ext. 108

Brian R. Tomkins
LERNER DAVID LITTENBERG KRUMHOLZ & MENTLIK LLP
600 South Avenue West
Westfield, New Jersey 07090

HR/MD

UNITED STATES PATENT AND TRADEMARK OFFICE

Commissioner for Patents
United States Patent and Trademark Office
P.O. Box 1450
Alexandria, VA 22313-1450
www.uspto.gov

SPINE MP
LERNER DAVID, et al.
600 SOUTH AVENUE WEST
WESTFIELD, NJ 07090

MAILED

JAN 28 2010

OFFICE OF PETITIONS

In re Patent No. **7,223,290**
Issue Date: May 29, 2007
Application No. 10/642,527
Filed: August 15, 2003
Attorney Docket No. **SPINE 3.0-437**
PPPPPCON XV

: DECISION GRANTING PETITION
: UNDER 37 CFR 1.78(a)(3) AND
: REQUEST FOR CERTIFICATE OF
: CORRECTION
:

This is a decision on the renewed petition, filed July 21, 209, which is being treated as a petition under 37 CFR 1.78(a)(3), seeking to add a claim for priority under 35 U.S.C. § 120 to nonprovisional Application No. 10/256,160, filed September 26, 2002, by way of a certificate of correction.

The petition is **GRANTED**.

A review of the file record fails to disclose that a claim for the benefit of priority to the above-noted, prior-filed nonprovisional application was made within the time period set forth in 37 CFR 1.78(a)(2)(ii) and further failed to include a proper reference to the prior-filed application as required by 37 CFR 1.78(a)(2)(i) and 1.78(a)(2)(iii).

The instant application was filed August 15, 2003. Therefore, since this application was filed after November 29, 2000, a petition under 37 CFR 1.78(a)(3), along with submission of a Certificate of Correction, is the appropriate avenue of relief to accept a late claim for the benefit of priority to a prior-filed nonprovisional application after issuance of the application into a patent. *See* MPEP 1481.

A petition for acceptance of a claim for late priority under 37 CFR 1.78(a)(3) must be accompanied by:

(1) the reference required by 35 U.S.C. § 120 and 37 CFR 1.78(a)(2)(i) of the prior-filed application, unless previously submitted;
(2) the surcharge set forth in § 1.17(t); and

(3) a statement that the entire delay between the date the claim was due under 37 CFR 1.78(a)(2)(ii) and the date the claim was filed was unintentional. The Director may require additional information where there is a question whether the delay was unintentional.

As the petition for acceptance of an unintentionally delayed claim for the benefit of priority under 35 U.S.C. § 120 to the above-noted, prior-filed nonprovisional application satisfies the conditions of 37 CFR 1.78(a)(3), the petition is granted.

A corrected Filing Receipt, which includes the priority claim to the above-noted, prior-filed nonprovisional application, accompanies this decision on petition.

Petitioner is advised that the granting of this petition and the mailing of a corrected Filing Receipt should not be viewed as an indication that a determination has been made that this application is entitled to claim benefit of the prior-filed application. A determination that applicant is entitled to claim benefit of the prior-filed application will be made by the Examiner prior to the mailing of a certificate of correction.

As authorized, the $1,410 surcharge fee, as well as the $100 certificate of correction fee, has been charged to petitioner's Deposit Account No. 12-1095.

Any inquiries concerning this decision may be directed to Monica A. Graves at (571) 272-7253.

This application is being referred to the Certificates of Correction Branch for processing the request for a certificate of correction in accordance with this decision on the petition under 37 CFR 1.78(a)(3).

Christopher Bottorff
Petitions Examiner
Office of Petitions

ATTACHMENT: Corrected Filing Receipt

UNITED STATES PATENT AND TRADEMARK OFFICE

UNITED STATES DEPARTMENT OF COMMERCE
United States Patent and Trademark Office
Address: COMMISSIONER FOR PATENTS
P.O. Box 1450
Alexandria, Virginia 22313-1450
www.uspto.gov

APPLICATION NUMBER	FILING or 371(c) DATE	GRP ART UNIT	FIL FEE REC'D	ATTY.DOCKET.NO	TOT CLAIMS	IND CLAIMS
10/642,527	08/15/2003	3738	675	SPINE 3.0-437 PPPPPCON XV	20	3

CONFIRMATION NO. 3169

CORRECTED FILING RECEIPT

51640
SPINE MP
LERNER, DAVID, et al.
600 SOUTH AVENUE WEST
WESTFIELD, NJ 07090

Date Mailed: 01/27/2010

Receipt is acknowledged of this non-provisional patent application. The application will be taken up for examination in due course. Applicant will be notified as to the results of the examination. Any correspondence concerning the application must include the following identification information: the U.S. APPLICATION NUMBER, FILING DATE, NAME OF APPLICANT, and TITLE OF INVENTION. Fees transmitted by check or draft are subject to collection. Please verify the accuracy of the data presented on this receipt. **If an error is noted on this Filing Receipt, please submit a written request for a Filing Receipt Correction. Please provide a copy of this Filing Receipt with the changes noted thereon. If you received a "Notice to File Missing Parts" for this application, please submit any corrections to this Filing Receipt with your reply to the Notice. When the USPTO processes the reply to the Notice, the USPTO will generate another Filing Receipt incorporating the requested corrections**

Applicant(s)

Joseph P. Errico, Green Brook, NJ;
Michael W. Dudasik, Nutley, NJ;
Rafail Zubok, Midland Park, NJ;

Power of Attorney: The patent practitioners associated with Customer Number 000530

Domestic Priority data as claimed by applicant

This application is a CON of 10/256,160 09/26/2002 PAT 6,989,032
which is a CON of 10/175,417 06/19/2002 PAT 7,563,285
which is a CON of 10/151,280 05/20/2002 PAT 7,604,664
which is a CON of 09/970,479 10/04/2001 PAT 6,669,730
and is a CON of 10/140,153 05/07/2002 ABN
and said 09/970,479 10/04/2001
is a CON of 09/968,046 10/01/2001 ABN
and said 10/140,153 05/07/2002
is a CON of 09/970,479 10/04/2001 PAT 6,669,730
and is a CON of 10/128,619 04/23/2002 PAT 6,863,689
which is a CON of 09/906,119 07/16/2001 PAT 6,607,559
and is a CON of 09/982,148 10/18/2001 PAT 6,673,113

Foreign Applications

If Required, Foreign Filing License Granted: 11/11/2003

The country code and number of your priority application, to be used for filing abroad under the Paris Convention, is **US 10/642,527**

Projected Publication Date: Not Applicable

Non-Publication Request: No

Early Publication Request: No

Title

AXIALLY COMPRESSIBLE ARTIFICIAL INTERVERTEBRAL DISC HAVING A CAPTURED BALL AND SOCKET JOINT WITH A SOLID BALL AND COMPRESSION LOCKING POST

Preliminary Class

623

PROTECTING YOUR INVENTION OUTSIDE THE UNITED STATES

Since the rights granted by a U.S. patent extend only throughout the territory of the United States and have no effect in a foreign country, an inventor who wishes patent protection in another country must apply for a patent in a specific country or in regional patent offices. Applicants may wish to consider the filing of an international application under the Patent Cooperation Treaty (PCT). An international (PCT) application generally has the same effect as a regular national patent application in each PCT-member country. The PCT process **simplifies** the filing of patent applications on the same invention in member countries, but **does not result** in a grant of "an international patent" and does not eliminate the need of applicants to file additional documents and fees in countries where patent protection is desired.

Almost every country has its own patent law, and a person desiring a patent in a particular country must make an application for patent in that country in accordance with its particular laws. Since the laws of many countries differ in various respects from the patent law of the United States, applicants are advised to seek guidance from specific foreign countries to ensure that patent rights are not lost prematurely.

Applicants also are advised that in the case of inventions made in the United States, the Director of the USPTO must issue a license before applicants can apply for a patent in a foreign country. The filing of a U.S. patent application serves as a request for a foreign filing license. The application's filing receipt contains further information and guidance as to the status of applicant's license for foreign filing.

Applicants may wish to consult the USPTO booklet, "General Information Concerning Patents" (specifically, the section entitled "Treaties and Foreign Patents") for more information on timeframes and deadlines for filing foreign patent applications. The guide is available either by contacting the USPTO Contact Center at 800-786-9199, or it can be viewed on the USPTO website at http://www.uspto.gov/web/offices/pac/doc/general/index.html.

For information on preventing theft of your intellectual property (patents, trademarks and copyrights), you may wish to consult the U.S. Government website, http://www.stopfakes.gov. Part of a Department of Commerce initiative, this website includes self-help "toolkits" giving innovators guidance on how to protect intellectual property in specific countries such as China, Korea and Mexico. For questions regarding patent enforcement issues, applicants may call the U.S. Government hotline at 1-866-999-HALT (1-866-999-4158).

LICENSE FOR FOREIGN FILING UNDER

Title 35, United States Code, Section 184

Title 37, Code of Federal Regulations, 5.11 & 5.15

GRANTED

The applicant has been granted a license under 35 U.S.C. 184, if the phrase "IF REQUIRED, FOREIGN FILING LICENSE GRANTED" followed by a date appears on this form. Such licenses are issued in all applications where the conditions for issuance of a license have been met, regardless of whether or not a license may be required as set forth in 37 CFR 5.15. The scope and limitations of this license are set forth in 37 CFR 5.15(a) unless an earlier license has been issued under 37 CFR 5.15(b). The license is subject to revocation upon written notification. The date indicated is the effective date of the license, unless an earlier license of similar scope has been granted under 37 CFR 5.13 or 5.14.

This license is to be retained by the licensee and may be used at any time on or after the effective date thereof unless it is revoked. This license is automatically transferred to any related applications(s) filed under 37 CFR 1.53(d). This license is not retroactive.

The grant of a license does not in any way lessen the responsibility of a licensee for the security of the subject matter as imposed by any Government contract or the provisions of existing laws relating to espionage and the national security or the export of technical data. Licensees should apprise themselves of current regulations especially with respect to certain countries, of other agencies, particularly the Office of Defense Trade Controls, Department of State (with respect to Arms, Munitions and Implements of War (22 CFR 121-128)); the Bureau of Industry and Security, Department of Commerce (15 CFR parts 730-774); the Office of Foreign AssetsControl, Department of Treasury (31 CFR Parts 500+) and the Department of Energy.

NOT GRANTED

No license under 35 U.S.C. 184 has been granted at this time, if the phrase "IF REQUIRED, FOREIGN FILING LICENSE GRANTED" DOES NOT appear on this form. Applicant may still petition for a license under 37 CFR 5.12, if a license is desired before the expiration of 6 months from the filing date of the application. If 6 months has lapsed from the filing date of this application and the licensee has not received any indication of a secrecy order under 35 U.S.C. 181, the licensee may foreign file the application pursuant to 37 CFR 5.15(b).

SPE RESPONSE FOR CERTIFICATE OF CORRECTION

Paper No.: _____

DATE : 05/13/10

TO SPE OF : ART UNIT 3738

SUBJECT : Request for Certificate of Correction for Appl. No.: 10642528 Patent No.: 7160327

Please respond to this request for a certificate of correction within 7 days.

FOR IFW FILES:

Please review the requested changes/corrections as shown in the **COCIN** document(s) in the IFW application image. No new matter should be introduced, nor should the scope or meaning of the claims be changed.

Please complete the response (see below) and forward the completed response to scanning using document code **COCX**.

FOR PAPER FILES:

Please review the requested changes/corrections as shown in the attached certificate of correction. Please complete this form (see below) and forward it with the file to:

Certificates of Correction Branch (C of C)
Randolph Square 9D40-D
Palm Location 7580
You can fax the Directors/SPE response to 571-270-9990

Lamonte Newsome

Certificates of Correction Branch

703-756-1574

Thank You For Your Assistance

The request for issuing the above-identified correction(s) is hereby:
Note your decision on the appropriate box.

- ☐ **Approved** — **All** changes apply.
- ☐ **Approved in Part** — Specify below which changes **do not** apply.
- x**Denied** — State the reasons for denial below.

Formatted: Indent: Left: 1.22"

Comments: the priority data requires the current status of each application to which this application claims continuity with to indicate whether an application has become abandoned or issued to a patent with its Pat. number. In addition the change of relationship to parent application 10/256160 is not consistent with what was submitted on 7/28/05.

PTOL-306 (REV. 7/03) U.S. DEPARTMENT OF COMMERCE Patent and Trademark Office

CORRINE McDERMOTT
SUPERVISORY PATENT EXAMINER
TECHNOLOGY CENTER 3700

SPE RESPONSE FOR CERTIFICATE OF CORRECTION

Paper No.:20100709

DATE : July 15, 2010

TO SPE OF : ART UNIT 3738

SUBJECT : Request for Certificate of Correction on Patent No.: 7,160,327

A response is requested with respect to the accompanying request for a certificate of correction.

Please complete this form and return with file, within **7** days to:
Certificates of Correction Branch - PK 3-910
Palm location **7590** - Tel. No. 305-8201

With respect to the change(s) requested, correcting Office and/or Applicant's errors, should the patent read as shown in the certificate of correction? No new matter should be introduced, nor should the scope or meaning of the claims be changed.

Thank You For Your Assistance **Certificates of Correction Branch**

The request for issuing the above-identified correction(s) is hereby:
Note your decision on the appropriate box.

☐ **Approved** **All** changes apply.

☐ **Approved in Part** Specify below which changes **do not** apply.

☒ **Denied** State the reasons for denial below.

Comments:

Applicants request failed to meet all of the requirements according to MPEP 1481.03 II B. in that a petition and the appropriate fee is required to accept an unintentional delayed claim for benefit to prior applications.

SPE: /Corrine McDermott/ **Art Unit** 3738

I hereby certify that this paper (along with any paper referred to as being attached or enclosed) is being transmitted via the Office electronic filing system in accordance with § 1.6(a)(4).

Dated: June 24, 2010
Electronic Signature for William A. Di Bianca: /William A. Di Bianca/

Docket No.: SPINE 3.0-437 CIPCIPCIPCIPCIPCON XIV
(PATENT)

IN THE UNITED STATES PATENT AND TRADEMARK OFFICE

In re Letters Patent of:
Errico et al.

Patent No.: 7,160,327

Issued: January 9, 2007

For: ARTIFICIAL INTERVERTEBRAL DISC

Certificate of Correction Branch
Commissioner for Patents
P.O. Box 1450
Alexandria, VA 22313-1450

REVISED REQUEST FOR CERTIFICATE OF CORRECTION PURSUANT TO 37 CFR 1.322

Dear Sir:

Enclosed herewith is a REVISED Certificate of Correction to replace the Request for Certificate of Correction filed on May 7, 2010 with respect to the above-identified U.S. Patent. The priority data has been updated to reflect the current status of each application listed as continuity data.

For your ease, please review the chart on page 2 in which we have underlined priority information that is missing from the face page of the patent and added a strikethrough to priority information that is incorrect and therefore should be deleted from the face page of the patent.

DO NOT ENTER: /BP/ 07/09/2010

UNITED STATES PATENT AND TRADEMARK OFFICE

Commissioner for Patents
United States Patent and Trademark Office
P.O. Box 1450
Alexandria, VA 22313-1450
www.uspto.gov

Date Mailed : 07/14/10

Patent No. : 7160327 B1
Patent Issued : 10/20/09
Docket No. : **CDR-PT001**

Re: Request for Certificate of Correction

Consideration has been given your request for the issuance of a certificate of correction for the above-identified patent under the provisions of Rule(s) 1.322.

Respecting the alleged errors in the documents filed on 06/24/10; please see attachments. **"Therefore, no correction(s) is in order here under United States Codes (U.S.C.) 254 and the Code of Federal Regulation (C.F.R.) 1322."**

In view of the foregoing, your request in this matter is hereby denied.

Lamonte M. Newsome
For Mary Diggs, Supervisor
Decisions & Certificates
Of Correction Branch
(703) 756-1814 or (703) 756-1574

VOLPE AND KOENIG, P.C.
UNITED PLAZA
30 SOUTH 17TH STREET
PHILADELPHIA PA 19103

LMN

SPE RESPONSE FOR CERTIFICATE OF CORRECTION

Paper No.:20100709

DATE : July 14, 2010

TO SPE OF : ART UNIT 3738

SUBJECT : Request for Certificate of Correction on Patent No.: 7,160,327

A response is requested with respect to the accompanying request for a certificate of correction.

Please complete this form and return with file, within **7** days to:
Certificates of Correction Branch - PK 3-910
Palm location **7590** - Tel. No. 305-8201

With respect to the change(s) requested, correcting Office and/or Applicant's errors, should the patent read as shown in the certificate of correction? No new matter should be introduced, nor should the scope or meaning of the claims be changed.

Thank You For Your Assistance **Certificates of Correction Branch**

The request for issuing the above-identified correction(s) is hereby:
Note your decision on the appropriate box.

☐ **Approved** **All** changes apply.

☐ **Approved in Part** Specify below which changes **do not** apply.

☒ **Denied** State the reasons for denial below.

Comments:

Applicants request failed to meet all of the requirements according to MPEP 1481.03 II B. in that a petition and the appropriate fee is required to accept an unintentional delayed claim for benefit to prior applications.

SPE: /Corrine McDermott/ **Art Unit** 3738

UNITED STATES PATENT AND TRADEMARK OFFICE

Commissioner for Patents
United States Patent and Trademark Office
P.O. Box 1450
Alexandria, VA 22313-1450
www.uspto.gov

Date Mailed : 07/13/10

Patent No. : 7160327 B2
Patent Issued : 01/09/07
Docket No. : **F-265**

Re: Request for Certificate of Correction

Consideration has been given your request for the issuance of a certificate of correction for the above-identified patent under the provisions of Rule(s) 1.322.

Respecting the alleged errors in the documents filed on 05/07/10; please see attachments. **"Therefore, no correction(s) is in order here under United States Codes (U.S.C.) 254 and the Code of Federal Regulation (C.F.R.) 1322."**

In view of the foregoing, your request in this matter is hereby denied.

Lamonte M. Newsome
For Mary Diggs, Supervisor
Decisions & Certificates
Of Correction Branch
(703) 305-8309 or (703) 756-1574

SPINE MP
LERNER, DAVID, et al.
600 SOUTH AVENUE WEST
WESTFIELD NJ 07090

LMN

SPE RESPONSE FOR CERTIFICATE OF CORRECTION

Paper No.: _____

DATE : 05/13/10

TO SPE OF : ART UNIT 3738

SUBJECT : Request for Certificate of Correction for Appl. No.: 10642528 Patent No.: 7160327

Please respond to this request for a certificate of correction within 7 days.

FOR IFW FILES:

Please review the requested changes/corrections as shown in the **COCIN** document(s) in the IFW application image. No new matter should be introduced, nor should the scope or meaning of the claims be changed.

Please complete the response (see below) and forward the completed response to scanning using document code **COCX**.

FOR PAPER FILES:

Please review the requested changes/corrections as shown in the attached certificate of correction. Please complete this form (see below) and forward it with the file to:

Certificates of Correction Branch (C of C)
Randolph Square 9D40-D
Palm Location 7580

You can fax the Directors/SPE response to 571-270-9990

Lamonte Newsome
Certificates of Correction Branch
703-756-1574

Thank You For Your Assistance

The request for issuing the above-identified correction(s) is hereby:
Note your decision on the appropriate box.

☐ **Approved**	All changes apply.
☐ **Approved in Part**	Specify below which changes **do not** apply.
x**Denied**	State the reasons for denial below.

Formatted: Indent: Left: 1.22"

Comments: the priority data requires the current status of each application to which this application claims continuity with to indicate whether an application has become abandoned or issued to a patent with its Pat. number. In addition the change of relationship to parent application 10/256160 is not consistent with what was submitted on 7/28/05.

PTOL-306 (REV. 7/03) U.S. DEPARTMENT OF COMMERCE Patent and Trademark Office

CORRINE McDERMOTT
SUPERVISORY PATENT EXAMINER
TECHNOLOGY CENTER 3700

UNITED STATES PATENT AND TRADEMARK OFFICE

Commissioner for Patents
United States Patent and Trademark Office
P.O. Box 1450
Alexandria, VA 22313-1450
www.uspto.gov

Anthony J. O'Lenick, Jr.
2170 Luke Edwards Road
Dacula, GA 30019

COPY MAILED

NOV 0 4 2008

OFFICE OF PETITIONS

In re Patent No. 6,762,289 :
Issue Date: July 13, 2004 :
Application No. 10/642,564 : ON PETITION
Filed: August 18, 2003 :
Attorney Docket No. SIL-002 :

This is a decision on the petition under 37 CFR 1.378(c), filed September 4, 2008, to accept the delayed payment of a maintenance fee for the above-identified patent.

The petition is **DISMISSED**.

If reconsideration of this decision is desired, a petition for reconsideration under 37 CFR 1.378(e) must be filed within TWO (2) MONTHS from the mail date of this decision. No extension of this two-month time limit can be granted under 37 CFR 1.136(a) or (b). This is **not** a final agency action within the meaning of 5 U.S.C. § 704.

Any petition for reconsideration of this decision must be accompanied by the petition fee of $400 as set forth in 37 CFR 1.17(f). The petition for reconsideration must include the lacking item(s) noted above, since, after a decision on the petition for reconsideration, no further reconsideration or review of the matter will be undertaken by the Commissioner.

A petition to accept the unintentionally delayed payment of a maintenance fee under 35 U.S.C. § 41(c) and 37 CFR 1.378(c) must be accompanied by: (1) a statement that the delay was unintentional; (2) payment of the appropriate maintenance fee, unless previously submitted; (3) payment of the surcharge set forth in 37 CFR 1.20(i)(2). This petition lacks item (1) above.

As to item (1) the statement of unintentional delay is presently not acceptable since it was not signed by all the inventors. See 37 CFR 1.33(b) which states:

> (b) Amendments and other papers. Amendments and other papers, except for written assertions pursuant to § 1.27(c)(2)(ii) of this part, filed in the application must be signed by:
> (1) A registered patent attorney or patent agent of record appointed in compliance with § 1.32(b);
> (2) A registered patent attorney or patent agent not of record who acts in a representative capacity under the provisions of § 1.34;
> (3) An assignee as provided for under §3.71(b) of this chapter; or
> (4) All of the applicants (§ 1.41(b)) for patent, unless there is an assignee of the entire interest and such assignee has taken action in the application in accordance with § 3.71 of this chapter.

Further correspondence with respect to this matter should be addressed as follows:

By Mail:
Mail Stop PETITION
Commissioner for Patents
Post Office Box 1450
Alexandria, VA 22313-1450

By hand:
U. S. Patent and Trademark Office
Customer Service Window, Mail Stop Petitions
Randolph Building
401 Dulany Street
Alexandria, VA 22314

The centralized facsimile number is **(571) 273-8300.**

Telephone inquiries should be directed to the undersigned at (571) 272-4618.

Carl Friedman
Petitions Examiner
Office of Petitions

UNITED STATES PATENT AND TRADEMARK OFFICE

Commissioner for Patents
United States Patent and Trademark Office
P.O. Box 1450
Alexandria, VA 22313-1450
www.uspto.gov

Anthony J. O'Lenick, Jr.
2170 Luke Edwards Road
Dacula, GA 30019

MAILED

FEB 0 2 2009

OFFICE OF PETITIONS

In re Patent No. 6,762,289 :
Issue Date: July 13, 2004 :
Application No. 10/642,564 : ON PETITION
Filed: August 18, 2003 :
Attorney Docket No. SIL-002 :

This is a decision on the renewed petition under 37 CFR 1.378(c), filed November 18, 2008, to accept the unintentionally delayed payment of a maintenance fee for the above-identified patent.

The petition is **GRANTED**.

This patent expired on July 14, 2008, for failure to pay the three and one-half year maintenance fee. Since this petition was submitted within twenty-four months after the six-month grace period provided in 37 CFR 1.362(e), the petition was timely filed under the provisions of 37 CFR 1.378(c).

The decision mailed November 4, 2008 dismissed the petition filed on September 4, 2008 for failure to provide signatures from all of the inventors. The renewed petition included the signatures of both inventors in this application.

The maintenance fee is hereby accepted and the above-identified patent is reinstated as of the mail date of this decision.

Telephone inquiries concerning this decision should be directed to Kimberly Inabinet at (571) 272-4618.

The patent file is being forwarded to Files Repository.

Carl Friedman
Petitions Examiner
Office of Petitions

UNITED STATES PATENT AND TRADEMARK OFFICE

Commissioner for Patents
United States Patent and Trademark Office
P.O. Box 1450
Alexandria, VA 22313-1450
www.uspto.gov

GARY MIRZAKHANOV
3735 AMELIA ISLAND
COLORADO SPRINGS, CO 80920

COPY MAILED

JUN 28 2005

OFFICE OF PETITIONS

In re Application of :
Gary Mirzakhanov :
Application No. 10/642,565 : DECISION GRANTING PETITION
Filed: August 18, 2003 : UNDER 37 CFR 1.137(b)
For: UNDERGROUND IRRIGATION SYSTEMS :
FOR LAWNS

This is a decision on the petition under 37 CFR 1.137(b), filed February 16, 2005, to revive the above-identified application.

The petition is **GRANTED**.

The petition satisfies the conditions for revival pursuant to the provisions of 37 CFR 1.137(b) in that (1) a reply (dated January 7, 2005); (2) the petition fee of $750; and (3) the required statement of unintentional delay have been received. Accordingly, the reply to the nonfinal Office action of July 15, 2004 is accepted as having been unintentionally delayed.

Telephone inquiries concerning this decision should be directed to the undersigned at (571) 272-3218.

This matter is being referred to Technology Center AU 3673 for appropriate action on the reply received January 7, 2005.

Frances Hicks
Petitions Examiner
Office of Petitions
Office of the Deputy Commissioner
for Patent Examination Policy

UNITED STATES PATENT AND TRADEMARK OFFICE

Commissioner for Patents
United States Patent and Trademark Office
P.O. Box 1450
Alexandria, VA 22313-1450
www.uspto.gov

MAILED

MAY 2 0 2004

Director's Office
Group 3700

Alvin L. Smith
1464 Marshall Road
Vacaville, CA 95687

In re application of
Alvin L. Smith

Serial Number: 10/642620
Filed: August 19, 2003

DECISION ON PETITION TO MAKE SPECIAL UNDER 37 CFR. 1.102(c)

For: **CLIP TO HOLD IN PLACE AIR CONDITIONINGS VENTS IN VEHICLES**

This is a decision on the petition filed on August 08, 2003, under 37 CFR. 1.102(c) to make special the above identified application because of the age/health of the applicant. Since the requirements of the M.P.E.P Section 708.02 IV have been met, the petition will be GRANTED.

The examiner is directed (1) to make an interference search for possible interfering applications, (2) to promptly examine this application out of turn, and (3) if any interfering application is discovered, to examine such application simultaneously and state in the first official letter of such application that it is being taken out of turn because of a possible interference.

Petitioner is advised that this application will continue to be special, throughout its entire prosecution and pendency, including interference or appeal, if any, only is Petitioner makes a prompt bona-fide effort, in response to each Office action, to place the application in condition for allowance, even if it is necessary to conduct an interview with the Examiner to accomplish this purpose.

Summary: Decision on Petition **GRANTED**.

Richard A. Bertsch
Director
Technology Center 3700
(703) 308-0975

rt: 5/19/04

UNITED STATES PATENT AND TRADEMARK OFFICE

COMMISSIONER FOR PATENTS
UNITED STATES PATENT AND TRADEMARK OFFICE
P.O. BOX 1450
ALEXANDRIA, VA 22313-1450
www.uspto.gov

SIEMENS CORPORATION
INTELLECTUAL PROPERTY DEPARTMENT
170 WOOD AVENUE SOUTH
ISELIN, NJ 08830

COPY MAILED

MAY 0 8 2007

OFFICE OF PETITIONS

In re Application of :
Michael P. Dallmeyer, et al. :
Application No. 10/642,629 :
Filed: August 19, 2003 :
Attorney Docket No. 2003P12572US :

ON PETITION

This is a decision on the petition, filed January 17, 2007, to revive the above-identified application under the provisions of 37 CFR 1.137(b).

The above-identified application became abandoned for failure to respond in a timely manner to the Notice of Allowability mailed March 22, 2006. A Notice of Abandonment was mailed on July 26, 2006. In response, on January 17, 2007, the present petition was filed.

There is no indication that the person signing the instant petition was ever given a power of attorney or authorization of agent to prosecute the above-identified application. However, in accordance with 37 CFR 1.34(a), the signature of Edward J. Stemberger appearing on the petition shall constitute a representation to the United States Patent and Trademark Office that he is authorized to represent the particular party on whose behalf he acts. A courtesy copy of this decision is being mailed to petitioner. However, if Mr. Stemberger desires to receive future correspondence regarding this application, the appropriate power of attorney or authorization of agent must be submitted. All future correspondence regarding this application file will be directed solely to the address of record.

The petition satisfies the requirements of 37 CFR 1.137(b) in that petitioner has supplied (1) the reply in the form of corrected drawings, (2) the petition fee of $1,500 and (3) an adequate statement of unintentional delay[1].

Accordingly, the petition is **GRANTED**.

The application is being referred to the Office of Publications to oversee the review of the drawing filed January 17, 2006.

[1] 37 CFR 1.137(b)(3) requires a statement that the entire delay in filing the required reply from the due date for the reply until the filing of a grantable petition pursuant to 37 CFR 1.137(b) was unintentional. While the statement is not made by an attorney of record, such statement is being treated as having been made as the result of a reasonable inquiry into the facts and circumstances of such delay. See 37 CFR 10.18(b) and Changes to Patent Practice and Procedure; Final Rule Notice, 62 Fed. Reg. 53131, 53178 (October 10, 1997), 1203 Off. Gaz. Pat. Office 63, 103 (October 21, 1997). In the event that such an inquiry has not been made, petitioner must make such an inquiry. If such inquiry results in the discovery that it is not correct that the entire delay in filing the required reply from the due date for the reply until the filing of a grantable petition pursuant to 37 CFR 1.137(b) was unintentional, petitioner must notify the Office.

Telephone inquires related to this decision may be directed to the undersigned at (571) 272-3204. Status inquires related to processing at Publishing Division should be directed to (571) 272-4200.

Sherry D. Brinkley
Petitions Examiner
Office of Petitions

cc: EDWARD J. STEMBERGER
2000 M ST NW STE 700
WASHINGTON, DC 20036

UNITED STATES PATENT AND TRADEMARK OFFICE

Commissioner for Patents
United States Patent and Trademark Office
P.O. Box 1450
Alexandria, VA 22313-1450
www.uspto.gov

CROWELL & MORING LLP
INTELLECTUAL PROPERTY GROUP
P.O. BOX 14300
WASHINGTON DC 20044-430

COPY MAILED

MAR 19 2007

OFFICE OF PETITIONS

In re Application of :
Kazuhide Tanaka et al :
Application No. 10/642,643 : ON PETITION
Filed: August 19, 2003 :
Attorney Docket No. 056203.52693US :

This is a decision on the petition, filed March 16, 2007, under 37 CFR 1.313(c)(2) to withdraw the above-identified application from issue after payment of the issue fee.

The petition is **GRANTED.**

The above-identified application is withdrawn from issue for consideration of a submission under 37 CFR 1.114 (request for continued examination). See 37 CFR 1.313(c)(2).

Petitioner is advised that the issue fee paid on January 12, 2007 in the above-identified application cannot be refunded. If, however, the above-identified application is again allowed, petitioner may request that it be applied towards the issue fee required by the new Notice of Allowance.[1]

Telephone inquiries should be directed to the undersigned at (571) 272-3208.

The examiner of Technology Center AU 1754 will consider the request for continued examination under 37 CFR 1.114.

Karen Creasy

Karen Creasy
Petitions Examiner
Office of Petitions

[1] The request to apply the issue fee to the new Notice may be satisfied by completing and returning the new Issue Fee Transmittal Form PTOL-85(b), which includes the following language thereon: "Commissioner for Patents is requested to apply the Issue Fee and Publication Fee (if any) or re-apply any previously paid issue fee to the application identified above." Petitioner is advised that, whether a fee is indicated as being due or not, the Issue Fee Transmittal Form **must** be completed and timely submitted to avoid abandonment. Note the language in bold text on the first page of the Notice of Allowance and Fee(s) Due (PTOL-85).

UNITED STATES PATENT AND TRADEMARK OFFICE

Commissioner for Patents
United States Patent and Trademark Office
P.O. Box 1450
Alexandria, VA 22313-1450
www.uspto.gov

DEC 05 2005

ALTERA C/O MOFO SF
425 MARKET STREET
SAN FRANCISCO CA 94105

In re Application of:	:	
LEVENTIS et al.	:	
Serial No.: 10/642,722	:	DECISION ON REQUEST TO WITHDRAW
Filed: August 18, 2003	:	FROM RECORD
Attorney Docket No.: **306812004600**	:	

This is a decision on the request to withdraw as attorney/agent of record under 37 C.F.R. § 1.36, filed September 09, 2005.

A grantable request to withdraw as attorney of record must be signed by every attorney seeking to withdraw or contain a clear indication that one attorney is signing on behalf of others. A request to withdraw will not be approved unless at least thirty (30) days would remain between the date of approval and the later of the expiration date of a time to file a response or the expiration date of the maximum time period, which can be extended under 37 C.F.R. § 1.136(a).

The request meets all the above stated requirements. The request was signed by Stephen C. Durant, on behalf of himself and all the attorneys/agents of record.

The request is **APPROVED**.

All future communications from the Office will be directed to Godfrey Kwan, at the below address, until otherwise notified by applicant.

Inquiries related to this decision should be directed to Jose G. Dees at (571) 272-1569.

Jose G. Dees, Special Programs Examiner
Technology Center 2800
Semiconductors, Electrical and Optical
Systems and Components

cc: GODFREY KWAN
BEYER, WEAVER, THOMAS, LLP
OAKLAND CITY CENTER
500 12TH STREET, SUITE 200
OAKLAND CA 94607

UNITED STATES PATENT AND TRADEMARK OFFICE

Commissioner for Patents
United States Patent and Trademark Office
P.O. Box 1450
Alexandria, VA 22313-1450
www.uspto.gov

MORTON J. ROSENBERG
ROSENBERG, KLEIN & LEE
3458 ELLICOTT CENTER DRIVE-SUITE 101
ELLICOTT CITY MD 21043

COPY MAILED

JAN 16 2008

OFFICE OF PETITIONS

In re Patent No. 6,854,281	:	
Issue Date: February 15, 2005	:	
Application No. 10/642,726	:	DECISION ON PETITION
Filed: August 19, 2003	:	
Attorney Docket No. MR1683-492	:	

This is a decision on the petition under 37 CFR 1.182, filed September 10, 2007, requesting issuance of a duplicate Letters Patent for the above-identified patent.

The petition is **GRANTED**.

The Publishing Division is directed to issue a duplicate Letters Patent.

As authorized, the $400 fee for the petition under 37 CFR 1.182 has been assessed to petitioner's deposit account.

Telephone inquiries concerning this decision may be directed to the undersigned at (571) 272-3204. Inquiries regarding the issuance of a duplicate Letters Patent may be directed to Krystal Paige in the Publishing Division at (703) 308-9250, Ext. 139.

A copy of this decision is being faxed to Publishing Division for issuance of a duplicate Letters Patent.

Sherry D. Brinkley
Petitions Examiner
Office of Petitions

cc: Krystal Paige, South Tower, 8th Floor, Room C32 (Fax No. (571) 270-9937)

UNITED STATES PATENT AND TRADEMARK OFFICE

Commissioner for Patents
United States Patent and Trademark Office
P.O. Box 1450
Alexandria, VA 22313-1450
www.uspto.gov

ALICE O. MARTIN
BARNES & THORNBURG
P.O. BOX 2786
CHICAGO, IL 60690-2809

COPY MAILED

OCT 17 2007

OFFICE OF PETITIONS

In re Application of :
Alexander V. Kukhtin et al. :
Application No. 10/642,768 : ON PETITION
Filed: August 18, 2003 :
Attorney Docket No. 21416-93965 :

This is a decision on the petition under the unintentional provisions of 37 CFR 1.137(b), filed September 20, 2007, to revive the above-identified application.

The petition is **GRANTED**.

The application became abandoned for failure to timely file a reply within the meaning of 37 CFR 1.113 to the final Office action of February 28, 2007. The proposed reply required for consideration of a petition to revive must be a Notice of Appeal (and appeal fee required by 37 CFR 41.20(b)(2), an amendment that *prima facie* places the application in condition for allowance, a Request for Continued Examination and submission (37 CFR 1.114), or the filing of a continuing application under 37 CFR 1.53(b). See MPEP 711.03(c)(II)(A)(2). No extensions of time pursuant to the provisions of 37 CFR 1.136(a) were obtained. Accordingly, the date of abandonment of this application is May 30, 2007. May 28, 2007, the due date, was a Federal holiday.

The petition satisfies the requirements of 37 CFR 1.137(b) in that petitioner has supplied (1) the reply in the form of a Request for Continued Examination (RCE) and fee of $790.00, and the submission required by 37 CFR 1.114; (2) the petition fee of $750.00; and (3) a proper statement of unintentional delay.

An extension of time under 37 CFR 1.136 must be filed prior to the expiration of the maximum extendable period for reply. *See* In re Application of S., 8 USPQ2d 1630, 1631 (Comm'r Pats. 1988). Since the $510 extension of time fee submitted with the petition on September 20, 2007 was subsequent to the maximum extendable period for reply, this fee is unnecessary and will be credited to petitioner's deposit account.

Telephone inquiries concerning this decision should be directed to Kimberly Inabinet at (571) 272-4618.

This application is being referred to Technology Center AU 1634 for processing of the RCE and for appropriate action by the Examiner in the normal course of business on the amendment submitted in accordance with 37 CFR 1.114.

Frances Hicks
Petitions Examiner
Office of Petitions

UNITED STATES PATENT AND TRADEMARK OFFICE

COMMISSIONER FOR PATENTS
UNITED STATES PATENT AND TRADEMARK OFFICE
P.O. BOX 1450
ALEXANDRIA, VA 22313-1450
WWW.USPTO.GOV

Paper No. None

MORGAN LEWIS & BOCKIUS LLP
1111 PENNSYLVANIA AVENUE NW
WASHINGTON DC 20004

COPY MAILED

JUL 0 5 2006

OFFICE OF PETITIONS

In re Application of :
Georgiy Buyanovskiy :
Application No. 10/642,797 : DECISION ON PETITION
Filed: August 18, 2003 : UNDER 37 C.F.R. §1.137(f)
Attorney Docket No. 11382-003-999 :
Title: METHOD AND SYSTEM FOR ADAPTIVE DIRECT VOLUME RENDERING :

This is a decision on the petition filed on March 8, 2006, pursuant to 37 C.F.R. §1.137(f), to revive the above-identified application.

A grantable petition pursuant to 37 C.F.R. §1.137(f) must be accompanied by:

(1) Notification of the filing of an application in a foreign country or under a multinational treaty that requires 18 month publication[1];
(2) The petition fee as set forth in 37 C.F.R. § 1.17(m), and;
(3) A statement that the entire delay in filing the notice from the date that the notice was due under 35 U.S.C. §122(b)(2)(B)(iii) until the date the notice was filed was unintentional. The Commissioner may require additional information where there is a question whether the delay was unintentional.

1 See PTO/SB/36 and paragraph on PTO/SB/64a for further information. Both may be downloaded at http://www.uspto.gov/web/forms/index.html.

With the present petition, Petitioner has submitted the petition fee and the proper statement of unintentional delay.

Petitioner states that the instant nonprovisional application is the subject of an application filed in either a foreign or an international application on August 19, 2004. However, the United States Patent and Trademark Office was unintentionally not notified of this filing within 45 days subsequent to the filing of the subject application in either an international application or a foreign country.

Unfortunately, it does not appear that a Notice of Rescission of Nonpublication Request has been filed with the Office. As such, Petitioner has not rescinded the previous nonpublication request.

In view of the foregoing, this petition is **DISMISSED**.

Any reply must be submitted within **TWO (2) MONTHS** from the mail date of this decision. Extensions of time under 37 C.F.R. §1.136(a) are permitted. The reply should include a cover letter entitled "Renewed Petition Under 37 C.F.R. 1.137(f)". This is not a final agency action within the meaning of 5 U.S.C 704.

The renewed petition should indicate in a prominent manner that the attorney handling this matter is Paul Shanoski, and may be submitted by mail[2], hand-delivery[3], or facsimile[4].

Telephone inquiries regarding *this decision* should be directed to the undersigned at (571) 272-3225. All other inquiries concerning examination procedures or status of the application should be directed to the Technology Center.

Paul Shanoski
Senior Attorney
Office of Petitions
United States Patent and Trademark Office

2 Mail Stop Petition, Commissioner for Patents, United States Patent and Trademark Office, P.O. Box 1450, Alexandria, VA, 22313-1450.
3 Customer Window, Randolph Building, 401 Dulaney Street, Alexandria, VA, 22314.
4 (571) 273-8300- please note this is a central facsimile number.

UNITED STATES PATENT AND TRADEMARK OFFICE

COMMISSIONER FOR PATENTS
UNITED STATES PATENT AND TRADEMARK OFFICE
P.O. BOX 1450
ALEXANDRIA, VA 22313-1450
WWW.USPTO.GOV

Paper No. None

MORGAN LEWIS & BOCKIUS LLP
1111 PENNSYLVANIA AVENUE NW
WASHINGTON DC 20004

COPY MAILED

NOV 13 2006

OFFICE OF PETITIONS

In re Application of :
Georgiy Buyanovskiy :
Application No. 10/642,797 : DECISION ON RENEWED PETITION
Filed: August 18, 2003 : UNDER 37 C.F.R. §1.137(f)
Attorney Docket No. 11382-003-999 :
Title: METHOD AND SYSTEM FOR ADAPTIVE DIRECT VOLUME RENDERING :

This is a decision on the renewed petition filed on August 17, 2006, pursuant to 37 C.F.R. §1.137(f), to revive the above-identified application.

A grantable petition pursuant to 37 C.F.R. §1.137(f) must be accompanied by:

(1) Notification of the filing of an application in a foreign country or under a multinational treaty that requires 18 month publication[1];
(2) The petition fee as set forth in 37 C.F.R. § 1.17(m), and;
(3) A statement that the entire delay in filing the notice from the date that the notice was due under 35 U.S.C. §122(b)(2)(B)(iii) until the date the notice was filed was unintentional. The Commissioner may require additional information where there is a question whether the delay was unintentional.

1 See PTO/SB/36 and paragraph on PTO/SB/64a for further information. Both may be downloaded at http://www.uspto.gov/web/forms/index.html.

With the original petition, Petitioner submitted the petition fee and the proper statement of unintentional delay. Petitioner set forth that the present nonprovisional application is the subject of an application filed in either a foreign or an international application on August 19, 2004. However, the United States Patent and Trademark Office was unintentionally not notified of this filing within 45 days subsequent to the filing of the subject application in either an international application or a foreign country.

In view of the above, this application became abandoned pursuant to 35 U.S.C. §1.22(b)(2)(B)(iii) and 37 C.F.R. §1.213(c) for failure to timely notify the Office of the filing of either a foreign application or an application under a multilateral international agreement that requires publication of applications 18 months after filing.

The original petition was filed on March 8, 2006, and was dismissed via the mailing of a decision on July 5, 2006 for failure to file a Notice of Rescission of Nonpublication Request with the Office. As such, Petitioner failed to rescind the previous nonpublication request on original petition.

On August 17, 2006, a Notice of Rescission of Nonpublication Request was filed with the present renewed petition.

The renewed petition under 37 C.F.R. §1.137(f) is **GRANTED**.

Petitioner has submitted the notification of either a foreign or an international filing, paid the petition fee, and has made the proper statement of unintentional delay.

The present petition has been found to be in compliance with 37 C.F.R. §1.137(f). Accordingly, the failure to timely notify the Office of a foreign or international filing within 45 days after the date of filing of such foreign or international application as provided by 35 U.S.C. §122(b)(2)(B)(iii) and 37 C.F.R. §1.213(c) is accepted as having been unintentionally delayed.

The previous Request and Certification under 35 U.S.C. §122(b)(2)(B)(i), filed with the original application papers, has been rescinded. A Notice Regarding Rescission of Nonpublication Request which sets forth the projected publication date of December 7, 2006 was mailed to Applicant on August 28, 2006.

Technology Center 2600 will be notified of this decision.

Telephone inquiries regarding *this decision* should be directed to the undersigned at (571) 272-3225. All other inquiries concerning examination procedures or status of the application should be directed to the Technology Center.

Paul Shanoski
Senior Attorney
Office of Petitions
United States Patent and Trademark Office

UNITED STATES PATENT AND TRADEMARK OFFICE

COMMISSIONER FOR PATENTS
UNITED STATES PATENT AND TRADEMARK OFFICE
P.O. BOX 1450
ALEXANDRIA, VA 22313-1450
www.uspto.gov

ZARLEY LAW FIRM P.L.C.
CAPITAL SQUARE
400 LOCUST, SUITE 200
DES MOINES IA 50309-2350

COPY MAILED

NOV 23 2004

OFFICE OF PETITIONS

In re Application of :
Wilhelmus J.E.M. van den Dungen, et al. :
Application No. 10/642,800 : ON PETITION
Filed: August 18, 2003 :
Atty Docket No. 171 :

This is a decision on the petition, filed November 16, 2004, under 37 CFR 1.313(c)(2) to withdraw the above-identified application from issue after payment of the issue fee.

The petition is **GRANTED**.

The above-identified application is withdrawn from issue for consideration of a submission under 37 CFR 1.114 (request for continued examination). See 37 CFR 1.313(c)(2).

Petitioner is advised that the issue fee paid on September 9, 2004, in the above-identified application cannot be refunded. If, however, the above-identified application is again allowed, petitioner may request that it be applied towards the issue fee required by the new Notice of Allowance. [1]

Telephone inquiries relating to this decision should be directed to the undersigned at (571) 272-3204.

The application is being referred to Technology Center AU 3651 for further processing of the request for continued examination under 37 CFR 1.114 filed November 16, 2004.

Sherry D. Brinkley
Petitions Examiner
Office of Petitions
Office of the Deputy Commissioner
for Patent Examination Policy

[1]The request to apply the issue fee to the new Notice may be satisfied by completing and returning the new Issue Fee Transmittal Form PTOL-85(b), which includes the following language thereon: "Commissioner for Patents is requested to apply the Issue Fee and Publication Fee (if any) or re-apply any previously paid issue fee to the application identified above." Petitioner is advised that, whether a fee is indicated as being due or not, the Issue Fee Transmittal Form **must** be completed and timely submitted to avoid abandonment. Note the language in bold text on the first page of the Notice of Allowance and Fee(s) Due (PTOL-85).

UNITED STATES PATENT AND TRADEMARK OFFICE

Commissioner for Patents
United States Patent and Trademark Office
P.O. Box 1450
Alexandria, VA 22313-1450
www.uspto.gov

BRUCE FORSBERG
134 BUTCH CASH ROAD
HAZEL GREEN AL 35750

COPY MAILED

SEP 26 2005

OFFICE OF PETITIONS

In re Application of
Forsberg et al.
Application No. 10/642,817
Filed: August 19, 2003
Title of Invention: Candle Wick Maintenance Instrument

DECISION ON PETITION

This is a decision on the petition under 37 CFR 1.137(f) for failure to notify the Office of Foreign or International Filing, filed September 19, 2005, to revive the above-identified application. This application is properly treated as a petition under 37 CFR 1.137(b).

This above-identified application became abandoned for failure to timely file a reply to an Office Action mailed February 11, 2005. The Office Action set a one (1) month shortened statutory period for reply. No extensions of time were obtained under the provisions of 37 CFR 1.136(a). An untimely response to the Office Action was filed on March 21, 2005. Accordingly, this application became abandoned on March 12, 2005. A Notice of Abandonment was mailed on September 7, 2005.

The petition is **dismissed**.

Any request for reconsideration of this decision must be submitted within TWO (2) MONTHS from the mail date of this decision. Extensions of time under 37 CFR 1.136(a) are permitted. The reconsideration request should include a cover letter entitled "Renewed Petition under 37 CFR 1.137(b)."

Petitioner has requested that the petition fee in the amount of $750.00 be waived or at minimum a more reasonable fee be assessed.

The Office notes:

> 35 U.S.C. 41(a) (7) provides that a petition for the revival of an unintentionally abandoned application or for the unintentionally delayed payment of the issue fee must be accompanied by the petition fee set forth in 37 CFR 1.17(m), unless the petition is filed under 35 U.S.C. 133 or 151

(on the basis of unavoidable delay), in which case the fee is set forth in 37 CFR 1.17(l). Thus, unless the circumstances warrant the withdrawal of the holding of abandonment (i.e., it is determined that the application is not properly held abandoned), the payment of a petition fee to obtain the revival of an abandoned application is a statutory prerequisite to revival of the abandoned application, and cannot be waived.

In addition, the phrase "[o]n filing" in 35 U.S.C. 41(a)(7) means that the petition fee is required for the filing (and not merely the grant) of a petition under 37 CFR 1.137. See H.R. Rep. No. 542, 97th Cong., 2d Sess. 6 (1982), reprinted in 1982 U.S.C.C.A.N. 770 ("[t]he fees set forth in this section are due on filing the petition"). Therefore, the Office: (A) will not refund the petition fee required by 37 CFR 1.17(l) or 1.17(m), regardless of whether the petition under 37 CFR 1.137 is dismissed or denied; and (B) will not reach the merits of any petition under 37 CFR 1.137 lacking the requisite petition fee.

Further correspondence with respect to this matter should be addressed as follows:

By mail:	Mail Stop Petition Commissioner for Patents P.O. Box 1450 Alexandria, VA 22313-1450
By facsimile:	(571) 273-8300
By delivery service: (FedEx, UPS, DHL, etc.)	U.S. Patent and Trademark Office Customer Window, Mail Stop Petition Randolph Building 401 Dulany Street Alexandria, VA 22314

Telephone inquiries concerning this matter should be directed to the undersigned at (571) 272-3215.

Charlema R. Grant

Charlema R. Grant
Petitions Attorney
Office of Petitions

UNITED STATES PATENT AND TRADEMARK OFFICE

Commissioner for Patents
United States Patent and Trademark Office
P.O. Box 1450
Alexandria, VA 22313-1450
www.uspto.gov

BRUCE FORSBERG
134 BUTCH CASH ROAD
HAZEL GREEN AL 35750

COPY MAILED

JAN 0 6 2006

OFFICE OF PETITIONS

In re Application of
FORSBERG et al.
Application No. 10/642,817
Filed: August 19, 2003
Title of Invention: Candle Wick Maintenance Instrument

ON PETITION

This is a decision on the petition filed November 14, 2005, under 37 CFR 1.137(a) to revive the above-identified application.

The petition to revive under 37 CFR § 1.137(a) is **DISMISSED**.

Any request for reconsideration must be submitted within TWO (2) MONTHS from the mail date of this decision. Extensions of time under 37 CFR § 1.136(a) are permitted. The reconsideration request should include a cover letter entitled "Renewed Petition under 37 CFR § 1.137(a)." This is **not** a final agency action within the meaning of 5 U.S.C. § 704.

This above-identified application became abandoned for failure to timely file a reply to an Office Action mailed February 11, 2005. The Office Action set a one (1) month shortened statutory period for reply. No extensions of time were obtained under the provisions of 37 CFR 1.136(a). An untimely response to the Office Action was filed on March 21, 2005. Accordingly, this application became abandoned on March 12, 2005. A Notice of Abandonment was mailed on September 7, 2005. A petition filed under 37 CFR 1.137(f) but treated under 37 CFR 1.137(b) was dismissed without review of the merits for lack of petition fee on September 26, 2005.

PETITION TO REVIVE UNDER 37 CFR § 1.137(a)

A grantable petition under 37 CFR § 1.137(a) must be accompanied by:

(1) the required reply,[1]

(2) the petition fee,

(3) a showing to the satisfaction of the Director that the entire delay in filing the required reply from the due date for the reply until the filing of a grantable petition pursuant to this paragraph was unavoidable, and

(4) a terminal disclaimer and fee if the application was filed on or before June 8, 1995 or if the application is a design application.

The instant petition lacks items (1) and (3).

As to item (1), petitioner has submitted a reply to the non-final Office action with the instant petition. Although the claims begin on a separate sheet, petitioner's election and statement that no claims were added or changed are contained in the petition document. Petitioner should resubmit the information regarding election and no new claims on a separate page pursuant to 37 CFR 1.121.

As to item (3), the showing of record is not sufficient to establish to the satisfaction of the Director that the delay was unavoidable within the meaning of 37 CFR §1.137(a).

The Office may revive an abandoned application if the delay in responding to the relevant outstanding office requirement is shown to the satisfaction of the Commissioner to have been "unavoidable." See, 37 CFR § 1.137(a)(3). Decisions on reviving abandoned applications have adopted the reasonably prudent person standard in determining if the delay was unavoidable. Ex parte Pratt, 1887 Dec. Comm'r Pat. 31, 32-33 (Comm'r Pat. 1887) (the term "unavoidable" is applicable to ordinary human affairs, and requires no more greater care or diligence than is generally used and observed by prudent and careful men in relation to their most important business."); In re Mattullath, 38 App. D.C. 497, 514-15 (D.C. Cir. 1912); Ex parte Henrich, 1913 Dec. Comm'r Pat. 139, 141 (Comm'r Pat. 1913). In addition, decisions on revival are made on a "case by case basis, taking all the facts and circumstances into account." Smith v. Mossinghoff, 671 F.2d 533, 538, 213 USPQ 977, 982 (D.C. Cir. 1982). A petition to revive an application as unavoidably abandoned cannot be granted where petitioner has failed to meet his or her burden of establishing the cause of the unavoidable delay. Haines v. Quigg, 673 F. Supp. 314, 5 USPQ2D 1130 (N.D. Ind. 1987).

The showing of record is inadequate to establish unavoidable delay within the meaning of 35 U.S.C. § 133 and 37 CFR 1.137(a).[2] Specifically, an application is "unavoidably" abandoned only where petitioner, or counsel for petitioner, takes all action necessary for a proper response to the outstanding Office action, but through the intervention of unforeseen circumstances, such as failure of mail, telegraph, facsimile, or the negligence of otherwise reliable employees, the response is not timely received in the Office.[3]

Petitioner states that the abandonment was unavoidable due to the timing of the

---

[1] In a nonprovisional application abandoned for failure to prosecute, the required reply may be met by the filing of a continuing application. In an application or patent, abandoned or lapsed for failure to pay the issue fee or any portion thereof, the required reply must be the payment of the issue fee or any outstanding balance thereof.

[2] See MPEP 711(c)(III)(c)(2) for a discussion of the requirements for a showing of unavoidable delay.

[3] Ex parte Pratt, 1887 Dec. Comm'r Pat. 31 (Comm'r Pat. 1887).

mailings, deliveries of the mail services, unfamiliarity with the rules, regulation and processes and the formulation of the response.

Petitioner's arguments have been considered but they are not persuasive. Petitioner's contention that the delay was unavoidable due to unfamiliarity with the rules is not convincing to establish unavoidable delay because a delay caused by an applicant's lack of knowledge or improper application of the patent statute, rules of practice or the MPEP is not rendered "unavoidable". See In re Sivertz, 227 USPQ 255, 256 (Comm'r Pat. 1985).

To the extent there was a problem with receipt of non-final Office action petitioner has failed to provide any evidence. A review of the record indicates no irregularity in the mailing of the Notice, and in the absence of any irregularity in the mailing, there is a strong presumption that the Office action was properly mailed to the address of record. This presumption may be overcome by a showing that the Notice was not in fact received. The showing required to establish the failure to receive an Office communication must include a statement from the practitioner stating that the Office communication was not received by the practitioner and attesting to the fact that a search of the file jacket and docket records indicates that the Office communication was not received. A copy of the docket record where the non-received Office communication would have been entered had it been received and docketed must be attached to and referenced in practitioner's statement.[4] The showing outlined above may not be sufficient if there are circumstances that point to a conclusion that the non-final Office Action may have been lost after receipt rather than a conclusion that the non-final Office Action was lost in the mail.

Where applicant is pro se applicant should demonstrate what system is in place upon receipt of communication from the USPTO. If applicant retains documents in a central location, makes use of a computer program or calendar such information as well as any accompanying evidence should be provided on renewed petition. A pro se applicant must state that the file was searched and that the communication in question has not been located. The Office is looking for applicant to make a showing that the communication was not lost after receipt.

Accordingly, petitioner has failed to provide any facts or evidence that may warrant a finding of unavoidable delay.

On any future petition, petitioner must obtain the signature of co-inventor Linda Kay Forsberg, on the petition pursuant to 37 CFR 1.33 (2)(b)(4) which requires the signature of all applicants where there is no registered practitioner or an assignee of the entire invention.

Alternative Venue

Petitioner may wish to consider filing a petition to revive based on unintentional

---

[4] M.P.E.P. § 711.03(c); See Notice entitled "Withdrawing the Holding of Abandonment When Office Actions Are Not Received," 1156 O.G. 53 (November 16, 1993).

abandonment under 37 CFR 1.137(b). A grantable petition pursuant to 37 C.F.R. § 1.137(b) must be accompanied by the required reply, the required petition fee ($750.00 for small entity), and a statement that the **entire** delay in filing the required reply from the due date for the reply until the filing of a grantable petition pursuant to 37 C.F.R. § 1.137(b) was unintentional.

The filing of a petition under 37 C.F.R. § 1.137(b) cannot be intentionally delayed, and therefore, must be filed promptly. A person seeking revival due to unintentional delay cannot make a statement that the delay was unintentional unless the entire delay, including the delay from the date it was discovered that the application was abandoned until the filing of the petition to revive under 37 C.F.R. § 1.137(b), was unintentional. A statement that the delay was unintentional is not appropriate if petitioner intentionally delayed the filing of a petition for revival under 37 C.F.R. § 1.137(b).

Further correspondence with respect to this matter should be addressed as follows:

By mail:	Mail Stop Petition Commissioner for Patents P.O. Box 1450 Alexandria, VA 22313-1450
By facsimile:	(571) 273-8300
By delivery service: (FedEx, UPS, DHL, etc.)	U.S. Patent and Trademark Office Randolph Building 401 Dulany Street Alexandria, VA 22314

Telephone inquiries should be directed to the undersigned at (571) 272-3215.

Charlema R. Grant

Charlema R. Grant
Petitions Attorney
Office of Petitions

UNITED STATES PATENT AND TRADEMARK OFFICE

Commissioner for Patents
United States Patent and Trademark Office
P.O. Box 1450
Alexandria, VA 22313-1450
www.uspto.gov

BRUCE FORSBERG
134 BUTCH CASH ROAD
HAZEL GREEN AL 35750

COPY MAILED

MAR 09 2006

OFFICE OF PETITIONS

In re Application of :
FORSBERG et al. :
Application No. 10/642,817 : ON PETITION
Filed: August 19, 2003 :
Title of Invention: Candle Wick Maintenance Instrument :

This is a decision on the renewed petition filed January 30, 2005, under 37 CFR 1.137(a) to revive the above-identified application.

The petition to revive under 37 CFR § 1.137(a) is **DISMISSED**.

Any request for reconsideration must be submitted within TWO (2) MONTHS from the mail date of this decision. Extensions of time under 37 CFR § 1.136(a) are permitted. The reconsideration request should include a cover letter entitled "Renewed Petition under 37 CFR § 1.137(a)." This is **not** a final agency action within the meaning of 5 U.S.C. § 704.

This above-identified application became abandoned for failure to timely file a reply to an Office Action mailed February 11, 2005. The Office Action set a one (1) month shortened statutory period for reply. No extensions of time were obtained under the provisions of 37 CFR 1.136(a). An untimely response to the Office Action was filed on March 21, 2005. Accordingly, this application became abandoned on March 12, 2005. A Notice of Abandonment was mailed on September 7, 2005. A petition filed under 37 CFR 1.137(f) but treated under 37 CFR 1.137(b) was dismissed without review of the merits for lack of petition fee on September 26, 2005. A second decision dismissing the petition was mailed on January 6, 2006.

PETITION TO REVIVE UNDER 37 CFR § 1.137(a)

A grantable petition under 37 CFR § 1.137(a) must be accompanied by:

(1) the required reply,[1]

(2) the petition fee,

(3) a showing to the satisfaction of the Director that the entire delay in filing the required reply from the due date for the reply until the filing of a grantable petition pursuant to this paragraph was unavoidable, and

(4) a terminal disclaimer and fee if the application was filed on or before June 8, 1995 or if the application is a design application.

The instant petition lacks items (1) and (3).

As to item (1), petitioner has submitted a reply to the non-final Office action with the instant petition. Although the claims begin on a separate sheet, petitioner's election and statement that no claims were added or changed are contained in the petition document. Petitioner should resubmit the information regarding election and no new claims on a separate page pursuant to 37 CFR 1.121.

As to item (3), the showing of record is not sufficient to establish to the satisfaction of the Director that the delay was unavoidable within the meaning of 37 CFR §1.137(a).

The Office may revive an abandoned application if the delay in responding to the relevant outstanding office requirement is shown to the satisfaction of the Commissioner to have been "unavoidable." See, 37 CFR § 1.137(a)(3). Decisions on reviving abandoned applications have adopted the reasonably prudent person standard in determining if the delay was unavoidable. Ex parte Pratt, 1887 Dec. Comm'r Pat. 31, 32-33 (Comm'r Pat. 1887) (the term "unavoidable" is applicable to ordinary human affairs, and requires no more greater care or diligence than is generally used and observed by prudent and careful men in relation to their most important business."); In re Mattullath, 38 App. D.C. 497, 514-15 (D.C. Cir. 1912); Ex parte Henrich, 1913 Dec. Comm'r Pat. 139, 141 (Comm'r Pat. 1913). In addition, decisions on revival are made on a "case by case basis, taking all the facts and circumstances into account." Smith v. Mossinghoff, 671 F.2d 533, 538, 213 USPQ 977, 982 (D.C. Cir. 1982). A petition to revive an application as unavoidably abandoned cannot be granted where petitioner has failed to meet his or her burden of establishing the cause of the unavoidable delay. Haines v. Quigg, 673 F. Supp. 314, 5 USPQ2D 1130 (N.D. Ind. 1987).

The showing of record is inadequate to establish unavoidable delay within the meaning of 35 U.S.C. § 133 and 37 CFR 1.137(a).[2] Specifically, an application is "unavoidably" abandoned only where petitioner, or counsel for petitioner, takes all action necessary for a proper response to the outstanding Office action, but through the intervention of unforeseen circumstances, such as failure of mail, telegraph, facsimile, or the negligence of otherwise reliable employees, the response is not timely received in the Office.[3]

On renewed petition, petitioner provides no additional arguments in which to advance

---

[1] In a nonprovisional application abandoned for failure to prosecute, the required reply may be met by the filing of a continuing application. In an application or patent, abandoned or lapsed for failure to pay the issue fee or any portion thereof, the required reply must be the payment of the issue fee or any outstanding balance thereof.

[2] See MPEP 711(c)(III)(c)(2) for a discussion of the requirements for a showing of unavoidable delay.

[3] Ex parte Pratt, 1887 Dec. Comm'r Pat. 31 (Comm'r Pat. 1887).

the prosecution of the application.

Accordingly, petitioner has failed to provide any facts or evidence that may warrant a finding of unavoidable delay.

Alternative Venue

Petitioner may wish to consider filing a petition to revive based on unintentional abandonment under 37 CFR 1.137(b). A grantable petition pursuant to 37 C.F.R. § 1.137(b) must be accompanied by the required reply, the required petition fee ($750.00 for small entity), and a statement that the **entire** delay in filing the required reply from the due date for the reply until the filing of a grantable petition pursuant to 37 C.F.R. § 1.137(b) was unintentional.

The filing of a petition under 37 C.F.R. § 1.137(b) cannot be intentionally delayed, and therefore, must be filed promptly. A person seeking revival due to unintentional delay cannot make a statement that the delay was unintentional unless the entire delay, including the delay from the date it was discovered that the application was abandoned until the filing of the petition to revive under 37 C.F.R. § 1.137(b), was unintentional. A statement that the delay was unintentional is not appropriate if petitioner intentionally delayed the filing of a petition for revival under 37 C.F.R. § 1.137(b).

Further correspondence with respect to this matter should be addressed as follows:

By mail:	Mail Stop Petition Commissioner for Patents P.O. Box 1450 Alexandria, VA 22313-1450
By facsimile:	(571) 273-8300
By delivery service: (FedEx, UPS, DHL, etc.)	U.S. Patent and Trademark Office Randolph Building 401 Dulany Street Alexandria, VA 22314

Telephone inquiries should be directed to the undersigned at (571) 272-3215.

Charlema R. Grant

Charlema R. Grant
Petitions Attorney
Office of Petitions

UNITED STATES PATENT AND TRADEMARK OFFICE

COMMISSIONER FOR PATENTS
UNITED STATES PATENT AND TRADEMARK OFFICE
P.O. BOX 1450
ALEXANDRIA, VA 22313-1450
www.uspto.gov

OSTROLENK FABER GERB & SOFFEN
1180 AVENUE OF THE AMERICAS
NEW YORK NY 10036-8403

COPY MAILED

APR 16 2004

OFFICE OF PETITIONS

In re Application of
Yuk Cheung Au et al.
Application No. 10/642,835
Filed: August 14, 2003
Attorney Docket No. P/4076-58

DECISION GRANTING PETITION

This is a response to the paper styled "REQUEST FOR A CORRECTED FILING RECEIPT" filed November 28, 2003 under 37 CFR 1.10, which is being treated as a submission under 37 CFR 1.6(e) requesting that the above-identified application be accorded a filing date of August 14, 2003, rather than the presently accorded filing date of August 18, 2003.

The USPTO is aware that a power outage on Thursday, August 14, 2003, resulted in a number of United States Postal Service (USPS) post offices throughout the Northeast and Midwest United States being closed or not accepting mail. As a result thereof, the Director of the USPTO designated the interruption in the service of the United States Postal Service (USPS) as a postal service interruption and an emergency within the meaning of 35 U.S.C. 21(a) and 37 CFR 1.6(e) for the period beginning Thursday, August 14, 2003 through Saturday, August 16, 2003. See the notice entitled "United States Postal Service Interruption and Emergency," 1251 Off. Gaz. Pat. Office 55 (August 15, 2003).

The submission filed on November 28, 2003, states that the application was prepared, and intended to be filed by Express Mail service on August 14, 2003, and, but for the designated interruption in the USPS, electrical energy blackout in New York City, would have been filed and accorded that date as the "date-in." Under 37 CFR 1.10(a), correspondence received by the USPTO that was delivered by the "Express Mail Post Office to Addressee" service of the USPS is considered filed in the Office on the date of deposit with the USPS shown by the "date-in" on the "Express Mail" mailing label or other official USPS notation. Based on the submission filed on November 23, 2003, it is concluded that the present application would have been filed on August 14, 2003, if it were not for the designated interruption in the USPS.

Accordingly, the application will be accorded a filing date of August 14, 2003.

No petition fee is due and none has been charged.

The application is being returned to the Office of Initial Patent Examination for further processing with a filing date of August 14, 2003 and for a corrected filing receipt.

Telephone inquiries regarding this decision should be directed to the undersigned Petitions Attorney at (703) 305-4497.

Patricia Faison-Ball
Senior Petitions Attorney
Office of Petitions

UNITED STATES PATENT AND TRADEMARK OFFICE

COMMISSIONER FOR PATENTS
UNITED STATES PATENT AND TRADEMARK OFFICE
P.O. BOX 1450
ALEXANDRIA, VA 22313-1450
www.uspto.gov

RECEIVED

APR 0 1 2004

OFFICE OF PETITIONS

Ostrolenk, Faber, Gerb & Soffen
1180 Avenue of the Americas
New York, NY 10036-8403

COPY MAILED

MAR 1 5 2004

OFFICE OF PETITIONS

In re Application of :
Jesus Maria Lata Perez :
Application No. 10/642,836 : DECISION GRANTING PETITION
Filed: August 14, 2003 :
Attorney Docket No. P/189-262 :

This is a decision on the "REQUEST FOR CORRECTED FILING RECEIPT" filed December 5, 2003, requesting that the above-identified application be accorded a filing date of August 14, 2003, rather than the presently accorded filing date of August 18, 2003, due to an interruption in the postal service. The request is being treated as a petition under 37 CFR 1.181.

The USPTO designated the interruption in the service of the USPS that occurred as a result of the power outage on Thursday, August 14, 2003, in the Northeast and Midwest United States as a postal service interruption and an emergency within the meaning of 35 U.S.C. 21(a) and 37 CFR 1.6(e). On August 15, 2003, a notice was posted on the USPTO website which indicated that correspondence that would have been filed with the USPTO under 37 CFR 1.10 during the USPS service interruption, but which was not filed due to the USPS service interruption, should be promptly filed after the termination of the interruption with a statement that the correspondence would have been deposited with the USPS but for the designated interruption or emergency in "Express Mail" service. Thereafter, on August 19, 2003, a second notice was posted on the USPTO website which indicated that the USPTO had terminated the designation of this interruption in the service of the USPS as postal service interruption and an emergency within the meaning of 35 U.S.C. 21(a) and 37 CFR 1.6(e). This notice stated that correspondence that would have been filed with the USPTO under 37 CFR 1.10 on August 14, 2003, through August 16, 2003, but which was not filed due to the USPS service interruption, should now be filed with the USPTO under 37 CFR 1.10 with a statement that the correspondence would have been deposited with the USPS on August 14, 2003, August 15, 2003, or August 16, 2003, but for the designated interruption in the "Express Mail" service of the USPS. *See United States Postal Service Interruptions and Emergency Terminated*, 1274 *Off. Gaz. Pat. Office* 105 (September 16, 2003).

The application was filed with a statement that the application would have been deposited with the United States Postal Service on August 14, 2003, but for the designated interruption in the "Express Mail" service. The petition included a similar statement.

The petition is granted. No petition fee is required.

After mailing of this decision, Initial Patent Examination Division will correct the filing date of the application to **August 14, 2003**, and mail a corrected filing receipt.

Telephone inquiries specific to this matter should be directed to the undersigned at (703) 306-5586.

Eugenia A. Jones
Senior Legal Advisor
Office of Patent Legal Administration
Office of the Deputy Commissioner
for Patent Examination Policy

UNITED STATES PATENT and TRADEMARK OFFICE
UNDER SECRETARY OF COMMERCE FOR INTELLECTUAL PROPERTY AND
DIRECTOR OF THE UNITED STATES PATENT AND TRADEMARK OFFICE
WASHINGTON, D.C. 20231
WWW.USPTO.GOV

GC

Mailed: 3-15-07

In re application of :
Fan, Qinbai :
Serial No. 10/642,852 : DECISION ON
Filed: August 18, 2003 : PETITION
For: DIRECT METHANOL FUEL CELL :
ELECTRODE CATALYST :

This is a decision on the PETITION UNDER 37 CFR 1.144 TO WITHDRAW THE RESTRICTION REQUIREMENT filed June 12, 2006.

On April 10, 2006, a four way restriction requirement was made by the Examiner. The Examiner took the position that the groupings of claims were related as combination and subcombination (I and II), unrelated inventions (I and III), unrelated inventions (I and IV), process of making and product made (II and III), unrelated inventions (II and IV), and unrelated inventions (III and IV). Applicant traversed the restriction requirement in a response filed April 28, 2006. The Examiner maintained the restriction requirement in the Office Action mailed on May 24, 2006.

On June 12, 2006, the instant petition under 37 CFR 1.144 was filed to formally request the withdrawal of the restriction requirement.

Applicant's position for the withdrawal of the restriction requirement is that the Examiner has not shown that each of the Groups are distinct and that the Inventions are related.

DECISION

Section 803 [R-3] of the MPEP states:

803 [R-3] Restriction — When Proper
Under the statute, the claims of an application may properly be required to be restricted to one of two or more claimed inventions only if they are able to support separate pat-ents and they are either independent (MPEP § 802.01, § 806.06, and § 808.01) or distinct (MPEP § 806.05 - § 806.05(j)).

Section 806.05(c) [R-3] of the MPEP states:

806.05(c) [R-3] Criteria of Distinctness Between Combination and Subcombination
To support a requirement for restriction between combination and subcombination inventions, both two-way distinctness and reasons for insisting on restriction are necessary, i.e., there would be a serious search burden as evidenced by separate classification, status, or field of search. See MPEP § 808.02.
The inventions are distinct if it can be shown that a combination as claimed:

(A) does not require the particulars of the subcombination as claimed for patentability (to show novelty and unobviousness), and
(B) the subcombination can be shown to have utility either by itself or in another materially different combination.

Section 806.05(f) [R-3] of the MPEP states:

806.05(f) [R-3] Process of Making and Product Made
A process of making and a product made by the process can be shown to be distinct inventions if either or both of the following can be shown: (A) that the process as claimed is not an obvious process of making the product and the process as claimed can be used to make another materially different product; or (B) that the product as claimed can be made by another materially different process.

Section 806.06 [R-3] of the MPEP states:

806.06 [R-3] Independent Inventions
Inventions as claimed are independent if there is no disclosed relationship between the inventions, that is, they are unconnected in design, operation, and effect. If it can be shown that two or more inventions are independent, and if there would be a serious burden on the examiner if restriction is not required, applicant should be required to restrict the claims presented to one of such independent inventions.

Petitioner argues that the Groups I (Claims 1-14) and II (Claims 15-19) are not distinct in that the combination in Claim 1 does require the particulars of the subcombination as claimed for patentability. These arguments are not persuasive. The independent Claim 15 of the subcombination requires a gas diffusion layer, an anode catalyst layer disposed on the surface of the gas diffusion layer, and the anode catalyst layer comprising a plurality of catalyst particles and a catalyst particle binder. None of the claims in Group I require these limitations. Additionally the subcombination can be shown to have separate utility such as an electrode in and environment separate from a fuel cell. Consequently the restriction requirement between Groups I and II is proper.

Petitioner argues that the Groups I (Claims 1-14) and III (Claims 20-29) are related inventions, namely a Product and a Process for Making and the Examiner has not shown that the Groups are distinct. While the Petitioner is correct in describing the relationship between Groups I and III as Product Made and Process of Making, the Groups are distinct. The product as claimed can be made by another materially different process such as one not requiring a step of mixing a plurality of anode catalyst particles with a binder material and the step of forming an anode catalyst ink. It is noted that the product claims do not require particles in a binder material for the anode catalyst layer. Consequently the restriction requirement between Groups I and III is proper.

Petitioner argues that the Groups I (Claims 1-14) and IV (Claims 30-39) are related inventions, namely Claim 30 is a method for producing the product of Claim 1. It is first noted that Claim 30 appears to be unclear as to whether a product or a method is claimed, therefore the restriction will be based on Applicant's intention to claim a method. While the Petitioner is assumed to be correct in describing the relationship between Groups I and IV as Product Made and Process of Making, the Groups are distinct. The product as claimed can be made by another materially different process such as one not requiring a direct methanol fuel cell, a step of reducing and substantially eliminating methanol crossover, and the step of applying a catalyst ink. It is noted that the product claims do not

require a direct methanol fuel cell, nor a catalyst ink. Consequently the restriction requirement between Groups I and IV is proper.

Petitioner argues that the Groups II (Claims 15-19) and III (Claims 20-29) are not distinct inventions because the method steps do include a mixing step. It appears as though Applicant is misinterpreting the basis for distinctness due to a typographical error by the Examiner. The product as claimed can be made by another materially different process such as one not requiring a step of mixing a plurality of anode catalyst particles with a binder material, the step of forming an anode catalyst ink, and the step of forming a fuel cell anode electrode. It is noted that the product claims do not require a fuel cell nor a catalyst ink. Additionally, the particles and binder in the electrode product claims can be formed by applying a binder to the electrode and then applying particles to the binder layer without a prior mixing step. Consequently the restriction requirement between Groups II and III is proper.

Petitioner argues that the Groups II (Claims 15-19) and IV (Claims 30-39) are related inventions and distinctness has not been shown by the Examiner. It is first noted that Claim 30 appears to be unclear as to whether a product or a method is claimed, therefore the restriction will be based on Applicant's intention to claim a method. While the Petitioner is assumed to be correct in describing the relationship between Groups II and IV as Product Made and Process of Making, the Groups are distinct. The product as claimed can be made by another materially different process such as one not requiring a direct methanol fuel cell, a step of reducing and substantially eliminating methanol crossover, and the step of applying a catalyst ink. It is noted that the product claims do not require a direct methanol fuel cell, nor a catalyst ink. It is further noted that the process does not form an electrode with a gas diffusion layer nor an anode catalyst layer with a plurality of catalyst particles and a catalyst particle binder. Consequently the restriction requirement between Groups II and IV is proper.

Petitioner argues that the Groups III (Claims 20-29) and IV (Claims 30-39) are related inventions and distinctness has not been shown by the Examiner. It is first noted that Claim 30 appears to be unclear as to whether a product or a method is claimed, therefore the restriction will be based on Applicant's intention to claim a method. The proper relationship between the Groups is combination (Group IV) and subcombination (Group III) and the Groups are considered to be properly distinct. The independent Claim 20 of the subcombination requires that particulars of a step of mixing a plurality of anode catalyst particles with a binder material, and applying the catalyst ink to an anode electrode gas diffusion layer. None of the claims in Group IV require these limitations. Additionally the subcombination has separate utility such as a method of forming a fuel cell which is not a direct methanol fuel cell and without the step of reducing and substantially eliminating methanol crossover. Consequently the restriction requirement between Groups III and IV is proper.

Accordingly, the restriction requirement is proper and the instant petition to withdraw the restriction requirement is **DENIED**. The instant Application is being forwarded to the Examiner to consider the response filed by Applicant on June 12, 2006. The subsequent Office Action should include a clarification of the basis for the restriction requirement between the Groups as set forth above.

Jacqueline M. Stone, Director
Technology Center 1700
Chemical and Materials Engineering

MARK E. FEJER
GAS TECHNOLOGY INSTITUTE
1700 SOUTH MOUNT PROSPECT ROAD
DES PLAINES IL 60018

UNITED STATES PATENT AND TRADEMARK OFFICE

Commissioner for Patents
United States Patent and Trademark Office
P.O. Box 1450
Alexandria, VA 22313-1450
www.uspto.gov

Brian M. Dingman, Esq.
Mirick, O'Connell, DeMallie & Lougee, LLP
1700 West Park Drive
Westborough, MA 01581-3941

COPY MAILED
SEP 28 2006
OFFICE OF PETITIONS

In re Application of

Craig E. Goldman :

Application No. 10/642,859

: DECISION ON PETITION

Filed: August 18, 2003

:

Attorney Docket No. 18010-00004

This is a decision on the petition under 37 CFR 1.137(b), filed March 27, 2006, to revive the above-identified application.

The petition is **GRANTED**.

The above-cited application became abandoned for failure to reply in a timely manner to the non-final Office action mailed January 12, 2005, which set a shortened statutory period for reply of three (3) months from its mailing date. No extension of time pursuant to 37 CFR 1.136(a) was obtained within the allowable period. Accordingly, the application became abandoned on April 13, 2005. A Notice of Abandonment was mailed on August 23, 2005.

The amendment filed March 27, 2006, is noted.

The application is being forwarded to Technology Center 2800, GAU 2863 for further processing.

Telephone inquiries concerning this decision should be directed to the undersigned at (571) 272-3222.

Kenya A. McLaughlin
Petitions Attorney
Office of Petitions

UNITED STATES PATENT AND TRADEMARK OFFICE

Commissioner for Patents
United States Patent and Trademark Office
P.O. Box 1450
Alexandria, VA 22313-1450
www.uspto.gov

KAPLAN & GILMAN
900 ROUTE 9 NORTH
WOODBRIDGE, NJ 07095

COPY MAILED

JUN 18 2004

OFFICE OF PETITIONS

In re Application of :
Todres Yampel :
Application No. 10/642,867 : NOTICE
Filed: August 18, 2003 :
Attorney Docket No. 030/310 :

This is a notice regarding your request for acceptance of a fee deficiency submission under 37 CFR 1.28. On September 1, 1998, the Court of Appeals for the Federal Circuit held that 37 CFR 1.28(c) is the sole provision governing the time for correction of the erroneous payment of the issue fee as a small entity. **See DH Technology v. Synergystex International, Inc. 154 F.3d 1333, 47 USPQ2d 1865 (Fed. Cir. Sept. 1, 1998).**

The Office no longer investigates or rejects original or reissue applications under 37 CFR 1.56. **1098 Off. Gaz. Pat. Office 502 (January 3, 1989).** Therefore, nothing in this Notice is intended to imply that an investigation was done.

Your fee deficiency submission under 37 CFR 1.28 is hereby **ACCEPTED.**

Inquiries related to this communication should be directed to the Office of Petitions Staff at (703) 305-9285.

This matter is being referred to Technology Center AU 2171.

Wan Laymon
Petitions Examiner
Office of Petitions
Office of the Deputy Commissioner
for Patent Examination Policy

UNITED STATES PATENT AND TRADEMARK OFFICE

Commissioner for Patents
United States Patent and Trademark Office
P.O. Box 1450
Alexandria, VA 22313-1450
www.uspto.gov

DICKINSON WRIGHT PLLC
38525 WOODWARD AVENUE
SUITE 2000
BLOOMFIELD HILLS MI 48304-2970

MAILED

JUN 14 2010

OFFICE OF PETITIONS

In re Application of

Morrow, et al.

Application No. 10/642,879

Filed: August 18, 2003

Attorney Docket No. **WLI 1063 PUS**

DECISION ON PETITION

This is a decision on the petition under 37 CFR §1.137(b), March 24, 2010, to revive the above-identified application.

The petition is **granted**.

This application became abandoned for failure to timely remit the issue fee of $1,510.00 and the publication fee of $300.00 as required by the Notice of Allowance and Issue Fee Due (the "Notice") mailed December 1, 2009. The Notice set forth a three (3) month statutory period for reply. No response was received within the allowable period. Accordingly, this application became abandoned on March 2, 2010.

It is not apparent whether the person signing the statement of unintentional delay was in a position to have firsthand or direct knowledge of the facts and circumstances of the delay at issue. Nevertheless, such statement is being treated as having been made as the result of a reasonable inquiry into the facts and circumstances of such delay. See 37 CFR 10.18(b) and Changes to Patent Practice and Procedure; Final Rule Notice, 62 Fed. Reg. 53131, 53178 (October 10, 1997), 1203 Off. Gaz. Pat. Office 63, 103 (October 21, 1997). In the event that such an inquiry has not been made, petitioner must make such an inquiry. If such inquiry results in the discovery that it is not correct that the entire delay in filing the required reply from the due date for the reply until the filing of a grantable petition pursuant to 37 CFR 1.137(b) was unintentional, petitioner must notify the Office.

There is no indication that the person signing the instant petition was ever given a power of attorney or authorization of agent to prosecute the above-identified application. If the person signing the instant petition desires to receive future correspondence regarding this application, the appropriate power of attorney or authorization of agent must be submitted. While a courtesy copy of this decision is being mailed to the person signing the instant petition, all future

correspondence will be directed to the address of currently of record until such time as appropriate instructions are received to the contrary.

The issue fee and publication fee were received on March 24, 2010.

The application is being forwarded to the Office of Data Management for further processing.

Telephone inquiries concerning this matter may be directed to the undersigned at (571) 272-3222.

Kenya A. McLaughlin
Petitions Attorney
Office of Petitions

Cc:
Gregory P. Bondarenko
Warner Norcross & Judd, LLP
111 Lyon Street, NW
Suite 900
Grand Rapids, MI 49503

UNITED STATES PATENT AND TRADEMARK OFFICE

Commissioner for Patents
United States Patent and Trademark Office
P.O. Box 1450
Alexandria, VA 22313-1450
www.uspto.gov

SEP 20 2005

RALPH MANCINI
AKZO NOBEL, INC.
7 LIVINGSTONE AVENUE
DOBBS FERRY, NY 10522-3408

In re Application of :
Karin Bergstrom et al :
Serial No.: 10/642,882 : PETITION DECISION
Filed: August 18, 2003 :
Attorney Docket No.: PST6148US1/2159 :

This is in response to the petition under 37 CFR 1.181, filed June 21, 2005, requesting entry of an amendment after Final rejection and Notice of Appeal.

BACKGROUND

A review of the file history shows that the examiner mailed a non-Final Office action to applicants on June 17, 2004, setting a three month shortened statutory period for reply. The Office action held claims 5, 9-12 and 15 as withdrawn from consideration following an election made in response to a restriction requirement. The restriction requirement was made Final in the action. Claims 1-4, 6-8 and 13-14 were rejected under 35 U.S.C. 102(b) as anticipated by, or in the alternative under 35 U.S.C. 103(a) as unpatentable over Askew et al or Elliott et al. The examiner also held that the affidavit submitted March 26, 2004, was insufficient to overcome the rejections and provided reasons therefore.

Applicants filed a reply on November 16, 2004, including a request for a two month extension of time and fee therefore. Applicants replied to each ground of rejection and provided a new affidavit under 37 CFR 1.132 in an attempt to over come the rejections. Applicants also provided a complete listing of the pending claims, including new claim 16, as required. Inadvertently a typographical error was included in the structural representation of the orthoester surfactant where a "?" appeared instead of a bond.

The examiner mailed a Final Office action to applicants on January 26, 2005, setting a three month shortened statutory period for reply. A further request to rejoin method of making claim 5 (and claims dependent thereon) was denied. The examiner set forth a new rejection under 35 U.S.C. 112, second paragraph, of claims 1-4, 6-8, 13-14 and 16 for failing to particularly point out and distinctly claim the invention, but failed to further explain the rejection. Claims 1-4, 6-8, 13-14 and 16 were also rejected under 35 U.S.C. 103(a) as unpatentable over Askew et al or Elliott et al for the same general reasons as before. The examiner withdrew the rejection under 25 U.S.C. 102(b) and further argued that the submitted affidavit partly overcame the rejection,

but not completely, referencing "n2" as being unsupported in the affidavit when it had a value of zero.

Applicants replied by submitting an amendment and argument on April 26, 2005, and a Notice of Appeal. The amendment did not alter the claims except to replace the "?" typographical error in claims 1 and 16 with a proper bond. The argument also contained a further unexecuted affidavit directed to the deficiencies of the previous affidavit. The executed affidavit was submitted May 10, 2005, prior to the mailing of the Advisory Action.

The examiner mailed an Advisory action on May 19, 2005, indicating that a Notice of Appeal had been received on April 26, 2005. The action does not indicate the status of the amendment filed with the Notice of Appeal (Boxes 3-7), but does indicate in Box 9 (see also Box 11) that the affidavit filed May 10, 2005 was not considered as it was untimely filed.

This petition followed on June 21, 2005.

DISCUSSION

Applicants petition requests entry of the amendment after Final action and consideration of the affidavit filed therewith. Also requested is clarification of the rejection under 35 U.S.C. 112, second paragraph, on the record.

With respect to the amendment of the claims, it is clear that the amendment filed November 16, 2004, which adds claim 16, contains a typographical error since the structural formula of claim 1 is repeated from the previous amendment, but differs in that it contains a "?" in place of a bond. The same error appears in added claim 16 and is again an obvious typographical error. The examiner, however, rather than pointing out the error as typographical and requesting correction thereof rejected the claims under 35 U.S.C. 112, second paragraph, but failed to explain why. The amendment submitted April 26, 2005, corrects this error and, in the sense that it places the application in better form for appeal (in that it corrects an inadvertent typographical error), should have been entered. However the examiner failed to indicate entry or non-entry of the amendment leaving applicants in virtual limbo as to the status of the claims with respect to this rejection. For this reason alone, the amendment is hereby entered.

With respect to the affidavit submitted to overcome the rejection under 35 U.S.C. 103(a) set forth in the Final Office action, the examiner considers the affidavit to be untimely contending that it was submitted after the filing of the Notice of Appeal. When referring to the executed affidavit the examiner is correct. However applicants submitted an unexecuted copy of the affidavit with the amendment with an indication that an executed copy would be filed shortly. Such was done before the examiner prepared the Advisory Action. The examiner should have considered the affidavit as timely filed since a copy was submitted prior to (or concurrently with) the filing of the Notice of Appeal. The formality of providing an executed copy merely fulfilled the requirements of the Rule. Had no executed copy been filed, the affidavit would have been considered defective, not untimely.

With respect to whether the affidavit responds to a new rejection, a review of the rejection set forth in the non-Final action and the one set forth in the Final action show essentially the same statement of rejection is made in both (i.e. – the references' description as to their teachings is almost verbatim). However, the arguments responding to applicants' arguments and affidavits are significantly different. The non-Final action critiques the first filed affidavit as insufficient in not providing a showing commensurate with the claims. The second affidavit critiqued in the Final action notes that it is sufficient to overcome the rejection partially and sets forth what parts are not overcome or are deficient. Thus the examiner, *sub silento,* invited applicants to submit a further affidavit supplying the deficiencies of the submitted affidavit. For the examiner to then deny consideration of the affidavit is inappropriate.

The petition is **GRANTED.**

The Advisory action mailed May 19, 2005, is withdrawn as incomplete in failing to state the status of the amended claims and in failing to indicate the results of consideration of the affidavit. In view thereof the application will be forwarded to the examiner for prompt preparation of a new Advisory action, or other action, as appropriate.

There is no fee for this petition and the petition fee paid of $130.00 will be credited to applicants' Deposit Account No. 01-1350, as directed.

Should there be any questions about this decision please contact William R. Dixon, Jr., by letter addressed to Director, TC 1600, at the address listed above, or by telephone at 571-272-0519 or by facsimile sent to the general Office facsimile number 571-273-8300.

George C. Elliott
Director, Technology Center 1600

UNITED STATES PATENT AND TRADEMARK OFFICE

Commissioner for Patents
United States Patent and Trademark Office
P.O. Box 1450
Alexandria, VA 22313-1450
www.uspto.gov

RECHES PATENTS
211 NORTH UNION STREET
SUITE 100
ALEXANDRIA, VA 22314

COPY MAILED

OCT 21 2008

OFFICE OF PETITIONS

In re Application of :
Gadi Shor, et. al. :
Application No. 10/642,886 : ON PETITION
Filed: August 18, 2003 :
Attorney Docket No. 1082-WISAIR-US :

This is a decision on the petition under 37 CFR 1.137(b), filed on March 20, 2008, to revive the above-identified application.

The petition satisfies the requirements of 37 CFR 1.137(b) in that petitioner has supplied (1) the reply in the form of an amendment; (2) the petition fee of $770; and (3) a proper statement of unintentional delay. Therefore, the petition is **GRANTED**.

This application file is being referred to Technology Center Art Unit 2611 for review of the amendment filed with the instant petition.

Telephone inquiries concerning this decision should be directed to the undersigned at (571) 272-3226.

Andrea Smith
Petitions Examiner
Office of Petitions

UNITED STATES PATENT AND TRADEMARK OFFICE

Commissioner for Patents
United States Patent and Trademark Office
P.O. Box 1450
Alexandria, VA 22313-1450
www.uspto.gov

COPY MAILED

JUL 09 2007

OFFICE OF PETITIONS

SAWYER LAW GROUP LLP
PO BOX 51418
PALO ALTO CA 94303

In re Application of :
Neal R. Caliendo Jr. Et al :
Application No. 10/642,890 : ON PETITION
Filed: August 18, 2003 :
Attorney Docket No. RPS920030090IUS1/2860P :

This is a decision on the petition, filed July 9, 2007, under 37 CFR 1.313(c)(2) to withdraw the above-identified application from issue after payment of the issue fee.

The petition is **GRANTED.**

The above-identified application is withdrawn from issue for consideration of a submission under 37 CFR 1.114 (request for continued examination). See 37 CFR 1.313(c)(2).

Petitioner is advised that the issue fee paid on May 23, 2007 in the above-identified application cannot be refunded. If, however, the above-identified application is again allowed, petitioner may request that it be applied towards the issue fee required by the new Notice of Allowance.[1]

Telephone inquiries should be directed to the undersigned at (571) 272-3208.

The examiner of Technology Center AU 2193 will consider the request for continued examination under 37 CFR 1.114.

Karen Creasy

Karen Creasy
Petitions Examiner
Office of Petitions

[1] The request to apply the issue fee to the new Notice may be satisfied by completing and returning the new Issue Fee Transmittal Form PTOL-85(b), which includes the following language thereon: "Commissioner for Patents is requested to apply the Issue Fee and Publication Fee (if any) or re-apply any previously paid issue fee to the application identified above." Petitioner is advised that, whether a fee is indicated as being due or not, the Issue Fee Transmittal Form **must** be completed and timely submitted to avoid abandonment. Note the language in bold text on the first page of the Notice of Allowance and Fee(s) Due (PTOL-85).

UNITED STATES PATENT AND TRADEMARK OFFICE

Commissioner for Patents
United States Patent and Trademark Office
P.O. Box 1450
Alexandria, VA 22313-1450
www.uspto.gov

WALKER DIGITAL MANAGEMENT, LLC
2 HIGH RIDGE PARK
STAMFORD, CT 06905

COPY MAILED
AUG 2 9 2008

In re Application of :
Walker et al. :
Application No. 10/642,894 : ON PETITION
Filed: August 18, 2003 :
Attorney Docket No. 99-029-C1 :

This is a decision on the petition under the unintentional provisions of 37 CFR 1.137(b), filed April 29, 2008, to revive the above-identified application.

The petition is **GRANTED**.

This application became abandoned as a result of petitioner's failure to take appropriate action in a timely manner after the decision of February 15, 2008 by the Board of Patent Appeals and Interferences. Therefore, the proceedings as to the rejected claims were terminated. *See* 37 CFR 1.197(b). As no claim was allowed, the application became abandoned on April 16, 2008. *See* MPEP 1214.06.

There is no indication that the person signing the instant petition was ever given a power of attorney or authorization of agent to prosecute the above identified application. However, in accordance with 37 CFR 1.34(a), the signature of Michael Downs appearing on the petition shall constitute a representation to the United States Patent and Trademark Office that he is authorized to represent the particular party on whose behalf he acts.

The petition satisfies the requirements of 37 CFR 1.137(b) in that petitioner has supplied (1) the reply in the form of a continuing application under 37 CFR 1.53(b), (2) the petition fee of $1540, and (3) an adequate statement of unintentional delay[1].

[1] 37 CFR 1.137(b)(3) requires a statement that the entire delay in filing the required reply from the due date for the reply until the filing of a grantable petition pursuant to 37 CFR 1.137(b) was unintentional. While the statement is made by an attorney of record, such statement is being treated as having been made as the result of a reasonable inquiry into the facts and circumstances of such delay. See 37 CFR 10.18(b) and Changes to Patent Practice and Procedure; Final Rule Notice, 62 Fed. Reg. 53131, 53178 (October 10, 1997), 1203 Off. Gaz. Pat. Office 63, 103 (October 21, 1997). In the event that such an inquiry has not been made, petitioner must make such an inquiry. If such inquiry results in the discovery that it is not correct that the entire delay in filing the required reply from the due date for the reply until the filing of a grantable petition pursuant to 37 CFR 1.137(b) was unintentional, petitioner must notify the Office.

This application is being revived solely for purposes of continuity. As continuity has been established by this decision, the application is again abandoned in favor of continuing application number. 12/111,716.

Telephone inquiries concerning this decision should be directed to Alicia Kelley at (571) 272-6059.

Sherry D. Brinkley
Petitions Examiner
Office of Petitions

UNITED STATES PATENT AND TRADEMARK OFFICE

Commissioner for Patents
United States Patent and Trademark Office
P.O. Box 1450
Alexandria, VA 22313-1450
www.uspto.gov

Katten, Muchin, Rosenman, LLP
575 Madison Avenue
New York, New York 10022-2585

COPY MAILED

SEP 22 2005

OFFICE OF PETITIONS

In re Application of :
Takano et al. :
Application No. 10/642,896 : DECISION GRANTING PETITION
Filed: August 14, 2003 :
Attorney Docket No. :

This is a decision on the "REQUEST FOR CORRECTED FILING RECEIPT" filed on November 26, 2003, requesting that the above-identified application be accorded a filing date of August 14, 2003, rather than the presently accorded filing date of August 18, 2003, due to an interruption in the postal service. The request is being treated as a petition under 37 CFR 1.181.

The USPTO designated the interruption in the service of the United States Postal Service (USPS) that occurred as a result of the power outage on Thursday, August 14, 2003, in the Northeast and Midwest United States as a postal service interruption and an emergency within the meaning of 35 U.S.C. 21(a) and 37 CFR 1.6(e). On August 15, 2003, a notice was posted on the USPTO website which indicated that correspondence that would have been filed with the USPTO under 37 CFR 1.10 during the USPS service interruption, but which was not filed due to the USPS service interruption, should be promptly filed after the termination of the interruption with a statement that the correspondence would have been deposited with the USPS but for the designated interruption or emergency in "Express Mail" service. Thereafter, on August 19, 2003, a second notice was posted on the USPTO website which indicated that the USPTO had terminated the designation of this interruption in the service of the USPS as postal service interruption and an emergency within the meaning of 35 U.S.C. 21(a) and 37 CFR 1.6(e). This notice stated that correspondence that would have been filed with the USPTO under 37 CFR 1.10 on August 14, 2003, through August 16, 2003, but which was not filed due to the USPS service interruption, should now be filed with the USPTO under 37 CFR 1.10 with a statement that the correspondence would have been deposited with the USPS on August 14, 2003, August 15, 2003, or August 16, 2003, but for the designated interruption in the "Express Mail" service of the USPS. *See United States Postal Service Interruptions and Emergency Terminated*, 1274 *Off. Gaz. Pat. Office* 105 (September 16, 2003).

The petition included a copy of a statement under 37 CFR 1.6(e) that was submitted on filing of the application. The statement indicates that the application papers would have been deposited with the United States Postal Service on August 14, 2003, but for the designated interruption in

"Express Mail" service.

In view of the circumstances, the petition is granted. No petition fee is required.

The "Response To Request For Corrected Filing Receipt" mailed January 6, 2004, was sent in error and is hereby withdrawn.

After mailing of this decision, Initial Patent Examination Division will correct the filing date of the application to **August 14, 2003**, and mail a corrected filing receipt.

Telephone inquiries specific to this matter should be directed to the undersigned at (571) 272-7727.

Eugenia A. Jones
Senior Legal Advisor
Office of Patent Legal Administration
Office of the Deputy Commissioner
for Patent Examination Policy

UNITED STATES PATENT AND TRADEMARK OFFICE

Commissioner for Patents
United States Patent and Trademark Office
P.O. Box 1450
Alexandria, VA 22313-1450
www.uspto.gov

Brinks Hofer Gilson & Lione
P.O. Box 10395
Chicago IL 60610

COPY MAILED

AUG 0 8 2007

OFFICE OF PETITIONS

In re Patent No. 7,158,354 :
Saito et al. : DECISION FOR REQUEST
Issue Date: January 2, 2007 : FOR RECONSIDERATION
Application No. 10/642,899 : OF PATENT TERM ADJUSTMENT
Filed: August 18, 2003 :
Attorney Docket No. 9281-4631 :

This is a decision on the "REQUEST FOR RECONSIDERATION OF PATENT TERM ADJUSTMENT," filed February 7, 2007. Patentees request that the patent term adjustment indicated in the patent be corrected from five hundred forty-one (541) days to six hundred seventy-eight days (678).

The request for reconsideration of the patent term adjustment under 35 U.S.C. 1.705(d) is **DISMISSED**.

Patentees are given **TWO (2) MONTHS** from the mail date of this decision to respond. No extensions of time will be granted under 37 CFR 1.136.

On January 2, 2007, the above-identified application matured into U.S. Patent No. 7,158,354, with a patent term adjustment of 541 days. The instant request for reconsideration, filed February 7, 2007, was timely filed within two months of the date the patent issued. See § 1.705(d). Patentees assert that an additional period of adjustment should have been entered for the Office taking in excess of three years to issue the patent.

It is noted that 541 days were entered for Office delay in issuing the patent pursuant to 37 CFR 1.702(a)(1). This is the correct period of adjustment for the delay. It is further noted that the instant patent issued 3 years and 137 days after its filing date. However, any days of delay for Office issuance of the patent more than three years after the filing date of the application that overlap with the days of patent term adjustment accorded prior to the issuance of the patent will not result in any additional patent term adjustment. Further, in considering the overlap, the entire period during which the application was pending (except for periods excluded under 35 U.S.C. 154(b)(1)(B)(i)-(iii), and not just the period beginning three years after the actual filing date of the application, is the period of delay under 35 U.S.C. 154(b)(1)(B) in determining whether

periods of delay overlap under 35 U.S.C. 154(b)(2)(A). See 35 U.S.C. 154(b)(1)(B); 35 U.S.C. 145(b)(2)(A); and 37 CFR 1.703(f). In this instance, the period of delay of 137 days attributable to the delay in issuance of the patent overlaps with the adjustment of 541 days attributable to grounds specified in § 1.702(a)(1). Thus, no additional period of adjustment pursuant to § 1.702(b) was entered.

In view thereof, the patent term adjustment of 541 days indicated in the patent is correct.

The Office will charge the deposit account for $200.00 fee set forth in 37 CFR 1.18(e), as requested. No additional fees are required.

Further correspondence with respect to this decision should be addressed as follows:

By Mail: Mail Stop Petition
Commissioner for Patents
PO Box 1450
Alexandria, VA 22313-1450

By FAX: (571) 273-8300
ATTN: Office of Petitions

By Hand: Customer Service Window
Randolph Building
401 Dulany Street
Alexandria, VA 22314

Correspondence regarding this decision may also be filed through the Electronic Filing System of the USPTO.

Telephone inquiries regarding this decision may directed to Christina Tartera Donnell, Senior Petitions Attorney, at (571) 272-3211.

Nancy Johnson
Senior Petitions Attorney
Office of Petitions

SPE: M. Lebentritt

SPE RESPONSE FOR CERTIFICATE OF CORRECTION

Paper No.: _____

DATE : 8/17/06

TO SPE OF : ART UNIT 2812

SUBJECT : Request for Certificate of Correction for Appl. No.: 10/642,903 Patent No.: 7013871

Please respond to this request for a certificate of correction within 7 days.

Please review the requested changes/corrections as shown in the **COCIN** document(s) in the IFW application image. No new matter should be introduced, nor should the scope or meaning of the claims be changed.

Please complete the response (see below) and forward the completed response to scanning using document code **COCX**.

Lamonte M. Newsome
Certificates of Correction Branch
703-308-9390 ext. 112

Thank You For Your Assistance

The request for issuing the above-identified correction(s) is hereby:

Note your decision on the appropriate box.

☒ **Approved**	**All** changes apply.
☐ **Approved in Part**	Specify below which changes **do not** apply.
☐ **Denied**	State the reasons for denial below.

Comments: _____

_____

_____

_____

_____

SPE **Art Unit**

UNITED STATES PATENT AND TRADEMARK OFFICE

COMMISSIONER FOR PATENTS
UNITED STATES PATENT AND TRADEMARK OFFICE
P.O. BOX 1450
ALEXANDRIA, VA 22313-1450
www.uspto.gov

3M INNOVATIVE PROPERTIES COMPANY
PO BOX 33427
ST. PAUL, MN 55133-3427

COPY MAILED

JUL 0 1 2004

OFFICE OF PETITIONS

In re Application of :
Muyres, et al. :
Filed: August 18, 2003 : ON PETITION
Application No. 10/642,919 :
Atty. Dkt. No.: 58434US002 :

This decision in response to the petition filed May 24, 2004 in response to the Notice of Incomplete Nonprovisional Application ("Notice") mailed March 24, 2003 for withdrawal of said Notice and accordance of an August 18, 2003 filing date for the above-identified application.

The application was submitted August 18, 2003. The Notice indicated that the application had not been accorded a filing date because the application appeared to have been deposited without drawings as required under 35 USC 113.

In response, the present petition was filed wherein petitioners argue that the application as deposited included one (1) drawing sheet. Petitioners have included as proof of mailing and proof of receipt of the drawing sheet a return postcard date stamped by the Office on August 18, 2003. A copy of the original drawing sheets purportedly filed with the application on August 18, 2003 was also supplied.

The original drawing sheet submitted with the application papers has not been located. However, in view of the evidence presented, the Notice is hereby **WITHDRAWN** and the petition to accord the application a filing date of August 18, 2003 is **GRANTED**.

Since the original drawing sheet cannot be located in the Office, the copy supplied with the instant petition will be used for examination purposes.

No petition fee is due in connection with this matter. The previously submitted petition fee of $130.00 has been credited to deposit account No. 13-3723.

This application will be returned to the Office of Initial Patent Examination for further processing with a filing date of August 18, 2003.

Telephone inquiries related to this decision may be directed to the undersigned at (703) 305-0310.

Alesia M. Brown
Senior Petitions Attorney
Office of Petitions

UNITED STATES PATENT AND TRADEMARK OFFICE

UNITED STATES DEPARTMENT OF COMMERCE
United States Patent and Trademark Office
Address: COMMISSIONER FOR PATENTS
P.O. Box 1450
Alexandria, Virginia 22313-1450
www.uspto.gov

APPLICATION NO.	FILING DATE	FIRST NAMED INVENTOR	ATTORNEY DOCKET NO.	CONFIRMATION NO.
10/642,928	08/18/2003	Ray Y. Lai	5681-66300	3868

58467 7590 05/27/2009

MHKKG/SUN
P.O. BOX 398
AUSTIN, TX 78767

EXAMINER	
SHAW, PELING ANDY	

ART UNIT	PAPER NUMBER
2444	

NOTIFICATION DATE	DELIVERY MODE
05/27/2009	ELECTRONIC

Please find below and/or attached an Office communication concerning this application or proceeding.

The time period for reply, if any, is set in the attached communication.

Notice of the Office communication was sent electronically on above-indicated "Notification Date" to the following e-mail address(es):

patent_docketing@intprop.com
ptomhkkg@gmail.com

UNITED STATES PATENT AND TRADEMARK OFFICE

COMMISSIONER FOR PATENTS
UNITED STATES PATENT AND TRADEMARK OFFICE
WASHINGTON, D.C. 20231
www.uspto.gov

MAILED

MAY 26 2009

TECHNOLOGY CENTER 2100

Robert C. Kowert
Meyertons, Hood, Kivlin, Kowert & Goetzel PC
P. O. Box 398
Austin, TX 78767

In re Application of: Lai	)	
Application No. 10/642,928	)	**DECISION ON PETITION TO**
Attorney Docket No. 5681-66300	)	**WITHDRAW RESTRICTION**
Filed: August 18, 2003	)	**REQUIREMENT UNDER 37 CFR**
For: Structured Methodology and Design Patterns for Web Services	)	**§1.144**

This is a decision on the petition filed October 20, 2008 under 37 C.F.R. §1.144 and 37 C.F.R. §1.181 to withdraw an outstanding restriction requirement.

The petition is **DENIED**.

RELEVANT PROSECUTION HISTORY

June 29, 2007	A restriction requirement of subcombinations useable together grouping claims 1-17 in one group, claims 18-55 in the second group, claims 56-69, in the third group, and 70-80 in the fourth group.
July 30, 2007	The applicant responded to the restriction requirement, electing group II with traverse and provided some argument supporting the traversal.
Oct 17, 2007	The examiner sent out a non-responsive action response to the applicant's election. The examiner indicated in that action that the applicant's arguments were not persuasive and seemed to indicate that the examiner did not believe that the applicant had elected a group.
Nov 19, 2007	The applicant responded to the examiner's non-responsive amendment action by re-iterating the election and traversal.
Feb 5, 2008	The examiner sent out a non-final rejection based on the applicant's election of group II.

May 5, 2008The applicant responded to the non-final rejection action with a request for reconsideration.

Aug 19, 2008 The examiner issued a final rejection.

Oct 20, 2008 The applicant filed a notice of appeal along with this petition arguing the restriction requirement.

REGULATIONS AND PRACTICE

37 C.F.R. § 1.144 states:

> After a final requirement for restriction, the applicant, in addition to making any reply due on the remainder of the action, may petition the Commissioner to review the requirement. Petition may be deferred until after final action on or allowance of claims to the invention elected, but must be filed not later than appeal. A petition will not be considered if reconsideration of the requirement was not requested. See 37 CFR § 1.181.

37 C.F.R. § 1.181(f) states:

> (f) The mere filing of a petition will not stay any period for reply that may be running against the application, nor act as a stay of other proceedings. Any petition under this part not filed within two months of the mailing date of the action or notice from which relief is requested may be dismissed as untimely, except as otherwise provided. This two-month period is not extendable.

MPEP § 803 states:

> Under the statute an application may properly be required to be restricted to one of two or more claimed inventions only if they are able to support separate patents and they are either independent (MPEP § 806.04 - § 806.04(i)) or distinct (MPEP § 806.05 - § 806.05(i)). If the search and examination of an entire application can be made without serious burden, the examiner must examine it on the merits, even though it includes claims to independent or distinct inventions.
>
> CRITERIA FOR RESTRICTION BETWEEN PATENTABLY DISTINCT INVENTIONS
>
> There are two criteria for a proper requirement for restriction between patentably distinct inventions:

> (A) The inventions must be independent (*see* MPEP §802.01, §806.04, §808.01) or distinct as claimed (see MPEP §806.05-§806.05(i)); and
> (B) There must be a serious burden on the examiner if restriction is required (see MPEP §803.02, §806.04(a) - §806.04(i), §808.01(a), and §808.02) ... For purposes of the initial requirement, a serious burden on the examiner may be *prima facie* shown if the examiner shows by appropriate explanation of separate classification, or separate status in the art, or a different field of search as defined in MPEP §808.02....

MPEP § 806.05(d) states:

> The subcombinations are distinct if they do not overlap in scope and are not obvious variants, and if it is shown that at least one subcombination is separately usable. ... Furthermore, restriction is only proper when there would be a serious burden if restriction were not required, as evidenced by separate classification, status, or field of search.

MPEP § 808.02 states:

> Where the * inventions as claimed are shown to be independent or distinct under the criteria of MPEP § 806.05(c) - § 806.06, the examiner, in order to establish reasons for insisting upon restriction, must explain why there would be a serious burden on the examiner if restriction is not required. Thus the examiner must show by appropriate explanation one of the following:
>
> (A) Separate classification thereof: This shows that each invention has attained recognition in the art as a separate subject for inventive effort, and also a separate field of search. Patents need not be cited to show separate classification.
>
> (B) A separate status in the art when they are classifiable together: Even though they are classified together, each invention can be shown to have formed a separate subject for inventive effort when the examiner can show a recognition of separate inventive effort by inventors. Separate status in the art may be shown by citing patents which are evidence of such separate status, and also of a separate field of search.
>
> (C) A different field of search: Where it is necessary to search for one of the inventions in a manner that is not likely to result in finding art pertinent to the other invention(s) (e.g., searching different classes/subclasses or electronic resources, or employing different search queries, a different field of search is shown, even though the two are classified together. The indicated different field of search must in fact be pertinent to the type of subject matter covered by the claims. Patents need not be cited to show different fields of search.

DECISION

Timeliness

Although the restriction was never made final in accordance with MPEP § 821.01, the initial restriction requirement was maintained in five subsequent communications. To expedite prosecution of this application, the Office action of Feb 5, 2008 which maintained the restriction requirement, is being treated as a Final restriction requirement.

The applicant's petition is timely because it was it was filed before any appeal. *See* 37 CFR §1.144.

Expanded Rationale of Restriction

MPEP 803 provides and sets forth two criteria for a proper requirement for restriction between patentably distinct inventions: (A) The inventions must be independent or distinct as claimed; and (B) There must be a serious burden on the examiner if restriction is required.

The restriction requirement made by the examiner satisfied the aforementioned two criteria for a proper requirement for restriction between patentably distinct inventions. *See* Office Action mailed June 29, 2007. It is noticed that the examiner should have provided an expanded reason to support his conclusion. The restriction requirement and the expanded reason to support the examiner's conclusion are provided herewith:

> Restriction to one of the following inventions is required under 35 U.S.C. 121:
>
> I. Claims 1-17, drawn to a web service system which provides web services, where the web service system is implemented using web service architecture, classified in class 709, subclass 203.
>
> II. Claims 18-55, drawn to a system which generates web service architecture, classified in class 709, subclass 218.
>
> III. Claims 56-69, drawn to the design and implementation of web service architecture, classified in class 709, subclass 220.
>
> IV. Claim 70-80, drawn to designing and implementing the security components of web service architecture, classified in class 709, subclass 229.

Inventions I, II, III, and IV are related as subcombinations disclosed as usable together in a single combination. The subcombinations are distinct if they do not overlap in scope and are not obvious variants, and if it is shown that at least one subcombination is separately usable. In the instant case, subcombination II has separate utility such as generating web service architectures that can be implemented in any type of web service provider system, and is not limited to only be implemented in the Web Service system described in subcombination I. Subcombination III has separate utility of being able to deploy, configure, and implement any type of generated web service architecture to implement it in any type of web service system. The particulars of the process in generating the web service architecture in subcombination II are not required, nor are the particulars required in subcombination I. Subcombination IV has separate utility, such as being able to building and implement security components for any type of web service and web architecture and it not limited to the particulars of the web service architecture disclosed in any of the other subcombinations. See MPEP § 806.05(d).

The examiner has required restriction between subcombinations usable together. Where applicant elects a subcombination and claims thereto are subsequently found allowable, any claim(s) depending from or otherwise requiring all the limitations of the allowable subcombination will be examined for patentability in accordance with 37 CFR 1.104. See MPEP § 821.04(a). Applicant is advised that if any claim presented in a continuation or divisional application is anticipated by, or includes all the limitations of, a claim that is allowable in the present application, such claim may be subject to provisional statutory and/or nonstatutory double patenting rejections over the claims of the instant application.

Restriction for examination purposes as indicated is proper because all these inventions listed in this action are independent or distinct for the reasons given above and there would be a serious search and examination burden if restriction were not required because one or more of the following reasons apply:

(a) the inventions have acquired a separate status in the art in view of their different classification;

(b) the inventions have acquired a separate status in the art due to their recognized divergent subject matter;

(c) the inventions require a different field of search (for example, searching different classes/subclasses or electronic resources, or employing different search queries);

(d) the prior art applicable to one invention would not likely be applicable to another invention;

(e) the inventions are likely to raise different non-prior art issues under 35 U.S.C. 101 and/or 35 U.S.C. 112, first paragraph.

Distinct Inventions

The applicant argues that the restriction is not proper because the claimed invention overlap in scope. *See* Petition, filed 10-20-08, pg 2-3. This assertion is merely a conclusionary statement and the applicant provides no evidence in support of this assertion. Group I contains one or more mutually exclusive characteristics from Group II, III, and IV such as service requestors and service provider. Group II contains one or more mutually exclusive characteristics from Group I, III, and IV such as generating a high-level architecture for a web services. Group III contains one or more mutually exclusive characteristics from Group I, II, and IV such as translating the one or more use case requirements and one or more technical constraints. Group IV contains one or more mutually exclusive characteristics from Group I, II, and III such as identifying one or more trust domains. The existence of the mutually exclusive elements in the claims supports the idea that the scope of the claims do not overlap. *See* MPEP § 806.05(d). The applicant has provided no arguments to the obviousness of the elements of each claim that do not overlap in the scope so accordingly the claims appear to be distinct.

Separate Utility

The applicant argues that the restriction is not proper because the examiner has failed to show separate utility (*see* Petition, filed 10-20-08, pg 3). The applicant argues that the examiner only shows the subcombinations' utility within the disclosed combination and no separate utility beyond the scope of the combination. The applicant provides no evidence to support any argument that the subcombinations are no separately usable.

The expanded rationale of the restriction provides better explanation of the separate utility of the subcombinations in the invention. The explanation shows that each subcombination has utility in more general implementations of web service architecture and is not limited to the particular requirements of the other subcombinations. Since the scope of the combination defined in the specification of the instant invention relies on the

implement of each of those particulars (for example the mutually exclusive claim limitations), having utility of implementing web service architectures outside of the specific implementations iterated in the other subcombinations provides some utility outside of that scope.

Burden

The applicant argues that the restriction is not proper because the examiner has failed to provide a serious burden (*see* Petition, filed 10-20-08, pg 3-4). The applicant argues that the claims of each group could be classified in alternative subclasses and that the classification of these particular claims to not represent divergent searches (*see* Petition, filed 10-20-08, pg 5-6).

The expanded rationale of the restriction further clarifies the distinction and divergent nature of each of the subcombinations in the application. As proof of serious burden, the examiner must show either A) different classification, B) separate status in the art, or C) divergent field of search. *See* MPEP §808.02. While the subcombinations arguably can be classifiable in the same class and subclass, the restriction clearly indicates that the subcombinations have distinct subject matter (as shown by the mutually exclusive claim elements discussed above) which requires a separate field of search which is not likely to result in finding art pertinent to the other inventions.

The restriction requirement is hereby maintained.

For the above reasons, the petition is **DENIED**. Further, pursuant to 37 C.F.R. § 1.181(f), the shortened statutory period for reply is continued to run three months from the mailing date of the Final Office Action.

If the petitioner desires further review of this decision, he should file a Request for Reconsideration within two (2) months of the mailing date of this decision. Otherwise, the petitioner may wish to consider filing a petition to seek a review of TC Director's decision.

Any inquiry regarding this decision should be directed the undersigned whose telephone number is (571) 272-4147.

/kb/

Jack Harvey, Director
Technology Center 2400
Network, Multiplexing, Cable and Security

UNITED STATES PATENT AND TRADEMARK OFFICE

MAILED

AUG 2 4 2009

DIRECTOR OFFICE
TECHNOLOGY CENTER 2400

Commissioner for Patents
United States Patent and Trademark Office
P.O. Box 1450
Alexandria, VA 22313-1450
www.uspto.gov

Robert C. Kowert
MHKKG/SUN
P.O. Box 398
AUSTING TX 78767

In re Application of: LAI, Ray Y.
Application No. **10/642,928**
Filed: August 18, 2003
Atty Docket No.: 5681-66300
Title of the Invention:
STRUCTURE METHOLOGY AND DESIGN PATTERS FOR WEB SERVICES

DECISION ON PETITION TO WITHDRAW RESTRICTION REQUIREMENT UNDER 37 C.F.R. § 1.144

This is a decision on the request filed July 27, 2009 for reconsideration on petition decision filed October 20, 2008 under 37 C.F.R. §1.144 to withdraw an outstanding restriction requirement.

This petition is **GRANTED**.

RULES AND REGULATIONS

MPEP 806.05(d): Subcombinations Usable Together [R-5]

Two or more claimed subcombinations, disclosed as usable together in a single combination, and which can be shown to be separately usable, are usually restrictable when the subcombinations do not overlap in scope and are not obvious variants.

DECISION

The claims as filed 5/05/08 has been reviewed and found not restrictable in accordance with the rules and regulations above mentioned.

For the above-mentioned reasons, the petition is **Granted**.

The restriction requirement is hereby **WITHDRAWN**.

The application will be forwarded to the examiner for consideration on the merits of all pending claims.

Any inquiry regarding this decision should be directed the undersigned whose telephone number is (571) 272-3902. If attempts to reach the undersigned by telephone are unsuccessful, Kim Huynh, Quality Assurance Specialist, can be reached at (571) 272-4147.

/bp/

/Beatriz Prieto/

Beatriz Prieto, Quality Assurance Specialist
Technology Center 2400
Network, Multiplexing, Cable and Security

UNITED STATES PATENT AND TRADEMARK OFFICE

COMMISSIONER FOR PATENTS
UNITED STATES PATENT AND TRADEMARK OFFICE
P.O. BOX 1450
ALEXANDRIA, VA 22313-1450
www.uspto.gov

ESCHWEILER & ASSOCIATES, LLC
NATIONAL CITY BANK BUILDING
629 EUCLID AVE., SUITE 1210
CLEVELAND OH 44114

COPY MAILED

MAY 12 2005

OFFICE OF PETITIONS

Applicant: Kellerman et al.
Appl. No.: 10/642,939
Filing Date: August 18, 2003
Title: MEMS BASED MULTI-POLAR ELECTROSTATIC CHUCK
Attorney Docket No.: 02-IMP-056
Pub. No.: US 2005/0041364 A1
Pub. Date: February 24, 2005

This is in response to the request for a corrected patent application publication under 37 CFR 1.221(b), which was received on March 30, 2005.

The request is DISMISSED.

The instant request is that the patent application publication be republished because the publication contains an error on the front page of the publication as the second inventors' name "Quin, Shu" is misspelled as "Oin, Shu".

Applicant has appointed an attorney or agent to conduct all business before the Patent and Trademark Office. Double correspondence with an applicant and applicant's attorney or agent will not be undertaken. Accordingly, applicant is required to conduct all future correspondence with this Office through the attorney or agent of record. See 37 CFR 1.33. Furthermore, when inventors sign papers for the Office, all of the inventors must sign the paper. See 37 CFR 1.33.

Since, the inventors have given a power of attorney and since only one of the three inventors has signed the paper, the request is dismissed.

Inquires concerning this communication should be directed to Mark Polutta at (571) 272-7709.

Mark O. Polutta
Office of Patent Legal Administration
Office of the Deputy Commissioner
for Patent Examination Policy

cc
Shu Qin
1001 Leadville Ave., Apt. 203
Boise, ID 83706

UNITED STATES PATENT AND TRADEMARK OFFICE

COMMISSIONER FOR PATENTS
UNITED STATES PATENT AND TRADEMARK OFFICE
P.O. BOX 1450
ALEXANDRIA, VA 22313-1450
www.uspto.gov

JUL -2 2004

In re Application of	:	
Manuel R. Suquitana	:	
Serial No. 10/642,965	:	DECISION ON PETITION
Filed: August 18, 2003	:	TO MAKE SPECIAL
For: GOLD JEWELRY LAPPING MACHINE: WITH SHROUD	:	

Applicant's petition, filed April 28, 2004, seeks to have this application made special pursuant to the Accelerated Examination Program. The petition is GRANTED.

The petition has been reviewed and is found to be in compliance with the requirements for special status as set forth in Section 708.02(VIII) of the Manual of Patent Examining Procedures (MPEP).

Applicant is advised that the examiner's search will be restricted to the subject matter encompassed by the claims. In the event that the application receives a first action rejection, applicant is encouraged to arrange for an interview with the examiner, and to provide the examiner with a working copy of any proposed amendment one working day prior to the interview. Any amendment filed in response to a first action rejection which would require broadening of the field of search will be treated as an improper response.

PETITION GRANTED.

E. Rollins-Cross, Director
Technology Center 3700

J. David Dainow
Amster, Rothstein & Ebenstein, LLP
90 Park Avenue
New York, NY 10016

UNITED STATES PATENT AND TRADEMARK OFFICE

Commissioner for Patents
United States Patent and Trademark Office
P.O. Box 1450
Alexandria, VA 22313-1450
www.uspto.gov

SNELL & WILMER
ATTN: JOSEPH W. PRICE
SUITE 1200
1920 MAIN STREET
IRVINE, CA 92614-7230

COPY MAILED

JUN 0 8 2005

OFFICE OF PETITIONS

In re Application of	:	
Yutaka Toya et al	:	
Application No. 10/642,967	:	ON PETITION
Filed: August 18, 2003	:	
Attorney Docket No. 42534-8200	:	

This is a decision on the petition under 37 CFR 1.137(b), filed May 3, 2005, to revive the above-identified application.

The petition is **GRANTED.**

The above-identified application became abandoned for failure to submit the issue fee, publication fee and formal drawing in a timely manner in reply to the Notice of Allowance and Notice of Allowability mailed December 16, 2004, which set a statutory period for reply of three (3) months. Accordingly, the above-identified application became abandoned on March 17, 2005.

The drawings filed on August 18, 2003 and May 3, 2005 have been approved by the Draftsperson. A copy of the Notice of Draftsperson's Patent Drawing Review (PTO-948) is attached.

Telephone inquiries should be directed to Wan Laymon at (571) 272-3220.

This matter is being referred to Publishing Division.

Wan Laymon
Petitions Examiner
Office of Petitions
Office of the Deputy Commissioner
for Patent Examination Policy

Attachment: PTO-948

UNITED STATES PATENT AND TRADEMARK OFFICE

Commissioner for Patents
United States Patent and Trademark Office
P.O. Box 1450
Alexandria, VA 22313-1450
www.uspto.gov

Julie Anne Knight
Aventis Pharmaceuticals, Inc.
Patent Department
Route #202-206/ P.O. Box 6800
Bridgewater NJ 08807-0800

COPY MAILED

AUG 27 2007

OFFICE OF PETITIONS

In re Application of	:	
Ritzeler et al.	:	DECISION ON APPLICATION
Application No. 10/642,970	:	FOR
Filed: August 18, 2003	:	PATENT TERM ADJUSTMENT
Atty Docket No. DEA V2002/0063 US	:	

This is a decision on the "REQUEST FOR PATENT TERM ADJUSTMENT PURSUANT TO 37 CFR 1.705," filed June 19, 2007. Applicants request that the patent term adjustment at the time of the mailing of the Notice of Allowance be corrected from one hundred eleven (111) days to three hundred forty-four (344) days.

The application for patent term adjustment is **GRANTED to the extent indicated herein**.

The Office has updated the PAIR screen to reflect that the correct Patent Term Adjustment (PTA) determination at the time of the mailing of the Notice of Allowance is **THREE HUNDRED TWENTY-FOUR** (324) days. A copy of the updated PAIR screen, showing the correct determination, is enclosed.

On March 19, 2007, the Office mailed the Determination of Patent Term Adjustment under 35 U.S.C. 154(b) in the above-identified application. The Notice stated that the patent term adjustment (PTA) to date is 111 days. The instant application for patent

term adjustment was timely filed[1]. Applicants dispute the reduction of 233 days for applicants' delay in responding to the Notices to File Missing Parts of Nonprovisional Application mailed November 12, 2003, and May 4, 2004.

The application history has been reviewed and it has been determined that the initial patent term adjustment of 111 days is incorrect. On November 12, 2003, the Office mailed a Notice to File Missing Parts of Nonprovisional Application, which set a two-month extendable period to submit an executed oath or declaration and a late oath or declaration surcharge. On January 7, 2004, applicants submitted a reply and an authorization to charge their deposit account. However, the reply consisted of a signed power of attorney and only the first page of the declaration without the complete signature page. On May 4, 2004, the Office mailed a second Notice to File Missing Parts, setting a two-month period to file an executed oath or declaration. On January 5, 2005, the Office mailed a Notice of Abandonment for failure to submit a timely and proper reply to the Notice of Missing Parts. On March 25, 2005, applicants filed a "PETITION TO WITHDRAW HOLDING OF ABANDONMNENT PURSUANT TO § 1.181(a)," which included copies of applicants' responses filed on January 7, 2004, and June 16, 2004. On April 29, 2005, the Office mailed a Withdrawal of the Previously Sent Notice of Abandonment, stating that the Notice of Abandonment mailed on January 5, 2005, was sent in error and was withdrawn.

A review of the application file confirms that a complete reply in the form of an executed declaration was filed on January 7, 2004, and resubmitted on June 16, 2004, as evidenced by applicants' Auto Reply Facsimile Transmissions.[2] Under these circumstances, applicants are correct that they did not fail to engage in reasonable efforts to conclude processing the application within the meaning of 37 CFR 1.704(b). Their complete responses were filed on January 7, 2004, and June 16, 2004.

---

[1] Office records indicate that the Issue Fee was also received on June 16, 2007.

[2] As the evidence establishes that the response filed January 7, 2004, was complete, no reduction pursuant to 37 CFR 1.704(c)(7) is warranted for applicants' filing a reply with an omission.

Nevertheless, applicants filed the petition to withdraw the holding of abandonment outside of the two-month period under 37 CFR 1.704(c)(4). Specifically, 37 CFR 1.704(c)(4) indicates that an applicants' failure to file a petition to withdraw a holding of abandonment within two months from the mailing date of a notice of abandonment is a circumstance that constitutes a failure of an applicant to engage in reasonable efforts to conclude processing or examination of an application. Any applicant who believes that the Office improperly held an application abandoned is expected to file a petition to withdraw the holding of abandonment within two months from the mailing date of a notice of abandonment. See MPEP §§ 711.03(c)(I) and 2732. The notice of abandonment was mailed on January 5, 2005, and the petition was not filed until March 25, 2005. Thus, applicants failed to engage in reasonable efforts to conclude processing of the application by delaying in the filing of the petition to withdraw the holding of abandonment by 20 days within the meaning of 37 CFR 1.704(c)(4).

In view thereof, the correct determination of patent term adjustment at the time of the mailing of the Notice of Allowance is THREE HUNDRED TWENTY-FOUR (324) days.

Receipt of the $200.00 fee set forth in 37 CFR 1.18(e) is acknowledged. No additional fees are required.

Applicants are reminded that any days of delay for Office issuance of the patent more than 3 years after the filing date of the application which overlap with the days of patent term adjustment accorded prior to the issuance of the patent will not result in any additional patent term adjustment. Further, in considering the overlap, the entire period during which the application was pending (except for periods excluded under 35 U.S.C. 154(b)(1)(B)(i)-(iii), and not just the period beginning three years after the actual filing date of the application, is the period of delay under 35 U.S.C. 154(b)(1)(B) in determining whether periods of delay overlap under 35 U.S.C. 154(b)(2)(A). See 35 U.S.C. 154(b) (1)(B); 35 U.S.C. 154(b)(2)(A); and 37 CFR 1.703(f).

This matter is being referred to the Office of Patent Publications for issuance of the patent.

Telephone inquiries specific to this matter should be directed to Christina Tartera Donnell, Senior Petitions Attorney, at (571) 272-3211.

Nancy Johnson
Senior Petitions Attorney
Office of Petitions

Enclosure: Copy of Revised PAIR Screen

Day : Friday
Date: 8/24/2007

PALM INTRANET

Time: 13:02:21

PTA Calculations for Application: 10/642970			
Application Filing Date:	08/18/2003	PTO Delay (PTO):	344
Issue Date of Patent:		Three Years:	0
Pre-Issue Petitions:	0	Applicant Delay (APPL):	233
Post-Issue Petitions:	0	Total PTA (days):	324
PTO Delay Adjustment:	213		

File Contents History

Number	Date	Contents Description	PTO	APPL	START
85	08/24/2007	ADJUSTMENT OF PTA CALCULATION BY PTO		20	
84	08/24/2007	ADJUSTMENT OF PTA CALCULATION BY PTO	233		
72	03/19/2007	MAIL NOTICE OF ALLOWANCE			
71	03/15/2007	ISSUE REVISION COMPLETED			
70	03/15/2007	NOTICE OF ALLOWANCE DATA VERIFICATION COMPLETED			
69	03/15/2007	NOTICE OF ALLOWABILITY			
68	03/09/2007	DATE FORWARDED TO EXAMINER			
67	03/06/2007	AMENDMENT SUBMITTED/ENTERED WITH FILING OF CPA/RCE			
66	03/09/2007	DATE FORWARDED TO EXAMINER			
65	03/06/2007	REQUEST FOR CONTINUED EXAMINATION (RCE)			
64	03/09/2007	DISPOSAL FOR A RCE/CPA/129 (EXPRESS ABANDONMENT IF CPA)			
63	03/06/2007	WORKFLOW - REQUEST FOR RCE - BEGIN			
62	12/11/2006	EXPORT TO INITIAL DATA CAPTURE			
61	12/06/2006	MAIL NOTICE OF ALLOWANCE			
60	12/04/2006	ISSUE REVISION COMPLETED			
59	12/04/2006	NOTICE OF ALLOWANCE DATA VERIFICATION COMPLETED			
58	12/04/2006	NOTICE OF ALLOWABILITY			
57	11/14/2006	DATE FORWARDED TO EXAMINER			
56	11/06/2006	RESPONSE AFTER NON-FINAL ACTION			
55	11/10/2006	FINISHED INITIAL DATA CAPTURE			
54	10/04/2006	MAIL NOTICE OF INFORMAL OR NON-RESPONSIVE RCE AMENDMENT			
		NOTICE OF INFORMAL OR NON-RESPONSIVE			

53	10/04/2006	RCE AMENDMENT.			
52	10/04/2006	DATE FORWARDED TO EXAMINER			
51	09/22/2006	AMENDMENT SUBMITTED/ENTERED WITH FILING OF CPA/RCE			
50	10/04/2006	DATE FORWARDED TO EXAMINER			
49	09/22/2006	REQUEST FOR CONTINUED EXAMINATION (RCE)			
48	10/04/2006	DISPOSAL FOR A RCE/CPA/129 (EXPRESS ABANDONMENT IF CPA)			
47	09/22/2006	WORKFLOW - REQUEST FOR RCE - BEGIN			
46	06/26/2006	EXPORT TO INITIAL DATA CAPTURE			
45	06/22/2006	MAIL NOTICE OF ALLOWANCE			
44	06/20/2006	ISSUE REVISION COMPLETED			
43	06/20/2006	NOTICE OF ALLOWANCE DATA VERIFICATION COMPLETED			
42	06/20/2006	NOTICE OF ALLOWABILITY			
41	06/07/2006	INFORMATION DISCLOSURE STATEMENT CONSIDERED			
40	06/07/2006	INFORMATION DISCLOSURE STATEMENT (IDS) FILED			
39	06/11/2006	DATE FORWARDED TO EXAMINER			
38	06/07/2006	REQUEST FOR CONTINUED EXAMINATION (RCE)			
37	06/11/2006	DISPOSAL FOR A RCE/CPA/129 (EXPRESS ABANDONMENT IF CPA)			
36	03/13/2006	EXPORT TO INITIAL DATA CAPTURE			
35	03/09/2006	MAIL NOTICE OF ALLOWANCE			
34	03/09/2006	MAIL EXAMINER'S AMENDMENT			
33	03/01/2006	ISSUE REVISION COMPLETED			
32	03/01/2006	NOTICE OF ALLOWANCE DATA VERIFICATION COMPLETED			
31	03/01/2006	EXAMINER'S AMENDMENT COMMUNICATION			
30	03/01/2006	NOTICE OF ALLOWABILITY			
29	03/01/2004	INFORMATION DISCLOSURE STATEMENT CONSIDERED			
28	01/04/2006	DATE FORWARDED TO EXAMINER			
27	12/20/2005	RESPONSE AFTER NON-FINAL ACTION			
25	09/27/2005	MAIL NON-FINAL REJECTION	344		-1
24	09/19/2005	NON-FINAL REJECTION			
23	06/10/2005	IFW TSS PROCESSING BY TECH CENTER			

		COMPLETE			
22	06/10/2005	CASE DOCKETED TO EXAMINER IN GAU			
21	04/28/2005	APPLICATION DISPATCHED FROM OIPE			
20	04/29/2005	APPLICATION IS NOW COMPLETE			
19	03/25/2005	ADDITIONAL APPLICATION FILING FEES		233	14
18	03/25/2005	A STATEMENT BY ONE OR MORE INVENTORS SATISFYING THE REQUIREMENT UNDER 35 USC 115, OATH OF THE APPLIC			
17	04/28/2005	CORRESPONDENCE ADDRESS CHANGE			
16	01/05/2005	WITHDRAW PRE-EXAM ABANDON			
15	07/06/2004	ABANDONMENT -- DURING PREEXAM PROCESSING			
14	05/04/2004	NOTICE MAILED--APPLICATION INCOMPLETE--FILING DATE ASSIGNED			
11	11/12/2003	PRE-EXAM OFFICE ACTION WITHDRAWN			
10	01/07/2004	A STATEMENT BY ONE OR MORE INVENTORS SATISFYING THE REQUIREMENT UNDER 35 USC 115, OATH OF THE APPLIC			
9	03/01/2004	REFERENCE CAPTURE ON IDS			
8	03/01/2004	INFORMATION DISCLOSURE STATEMENT (IDS) FILED			
7	08/18/2003	REQUEST FOR FOREIGN PRIORITY (PRIORITY PAPERS MAY BE INCLUDED)			
6	04/02/2004	CASE CLASSIFIED BY OIPE			
5	11/12/2003	NOTICE MAILED--APPLICATION INCOMPLETE--FILING DATE ASSIGNED			
4	11/03/2003	CASE CLASSIFIED BY OIPE			
3	11/03/2003	CLEARED BY OIPE CSR			
2	09/21/2003	IFW SCAN & PACR AUTO SECURITY REVIEW			
1	08/18/2003	INITIAL EXAM TEAM NN			

Search Another: Application# Search

EXPLANATION OF PTA CALCULATION

EXPLANATION OF PTE CALCULATION

To go back use Back button on your browser toolbar.

Back to PALM | ASSIGNMENT | OASIS | Home page

UNITED STATES PATENT AND TRADEMARK OFFICE

Commissioner for Patents
United States Patent and Trademark Office
P.O. Box 1450
Alexandria, VA 22313-1450
www.uspto.gov

MERCHANT AND GOULD PC
P.O. BOX 2903
MINNEAPOLIS, MN 55402-0903

COPY MAILED

APR 30 2007

OFFICE OF PETITIONS

In re Application of :
Karen G. Klaers, et al :
Application No. 10/643,018 : DECISION ON PETITION
Filed: August 18, 2003 : TO WITHDRAW
Attorney Docket No. 163.1236USC1 : FROM RECORD

This is a decision on the Request to Withdraw as attorney or agent of record under 37 C.F.R. § 1.36(b), filed January 22, 2007.

The request is **APPROVED**.

A grantable request to withdraw as attorney/agent of record must be signed by every attorney/agent seeking to withdraw or contain a clear indication that one attorney is signing on behalf of another/others. A request to withdraw will not be approved unless at least 30 (thirty) days would remain between the date of approval and the later of the expiration date of a time to file a response or the expiration date of the maximum time period which can be extended under 37 C.F.R. § 1.136(a).

Sarah M. Monfeldt has been withdrawn as attorney of record; all other attorneys remain of record.

The correspondence address of record remains unchanged.

There is an outstanding Office action mailed April 5, 2007 that requires a reply from the applicant.

Telephone inquiries concerning this decision should be directed to Diane Goodwyn at 571-272-6735.

April Wise
Petitions Examiner
Office of Petitions

UNITED STATES PATENT AND TRADEMARK OFFICE

Commissioner for Patents
United States Patent and Trademark Office
P.O. Box 1450
Alexandria, VA 22313-1450
www.uspto.gov

Patent No. : 7,038,160
Appl. No. : 10/643,027
Inventor(s) : Witte et al.
Issued : May 2, 2006
Title : METHOD FOR PRODUCING PERMANENT INTEGRAL CONNECTIONS OF OXIDE-DISPERSED (ODS) METALLIC MATERIALS OR COMPONENTS OF OXIDE-DISPERSED (ODS) METALLIC MATERIALS BY WELDING
Docket No. : P/633-17

Re: Request for Certificate of Correction

Consideration has been given your request for the issuance of a certificate of correction for the above-identified patent under the provisions of 37 CFR 1.322 and/or 1.323.

Assignees' names and addresses (assignment data) printed in a patent are based *solely* on information supplied in the appropriate space for identifying the assignment data, i.e., item 3 of the Fee(s) Transmittal Form PTOL-85B. After payment of the issue fee, correction of assignment data submitted on the PTOL-85B can only be done by Certificate of Correction under 37 CFR 1.323, with a request under 37 CFR 3.81(b).

.

A request for a patent to be corrected to state the name of the assignee must:

A. state that the assignment was submitted for recordation as set forth in 37 CFR 3.11 before issuance of the patent;
B. include a request for a certificate of correction under 37 CFR 1.323 along with the fee set forth in 37 CFR 1.20(a); and
C. include the processing fee set forth in 37 CFR 1.17(i).

If the request is granted, Certificates of Correction Branch will be notified that a Certificate of Correction may be issued.
See Manual of Patent Examining Procedure, Section 1481.01 (Rev. 3) (Oct. 2005).

Applicant has not included items A and or C above; accordingly, the request for Certificate of Correction to add or change the assignee data is dismissed.
Any request under 37 CFR 3.81(b) should be directed to the following address or facsimile number:

By mail: Mail Stop PETITIONS
Commissioner for Patents
Post Office Box 1450
Alexandria, VA 22313-1450

By hand: Customer Service Window
Mail Stop Petitions
Randolph Building
401 Dulany Street
Alexandria, VA 22314

By fax: 571-273-8300
ATTN: Office of Petitions

If a fee (currently $100) was previously submitted for consideration of a Request for Certificate of Correction, under CFR 1.323, to correct assignment data, no additional fee is required.

Stacy Powell, Sr.
For Cecelia B. Newman, Supervisor
Decisions & Certificates of
Correction Branch
(703) 308 – 9390 ext. 120 or (703) 305 - 8228

Ostrolenk, Faber, Gerb & Soffen, LLP
1180 Avenue of the Americas
New York, NY 10036-8403

CBN/spsr

UNITED STATES PATENT AND TRADEMARK OFFICE

Commissioner for Patents
United States Patent and Trademark Office
P.O. Box 1450
Alexandria, VA 22313-1450
www.uspto.gov

BAKER BOTTS, LLP
910 LOUISIANA
HOUSTON TX 77002-4995

COPY MAILED

JUN 25 2007

OFFICE OF PETITIONS

In re Application of	:	
Pescatore, John C.	:	
Application No. 10/643,032	:	ON PETITION
Filed: August 18, 2003	:	
Attorney Docket No. 016295.1401	:	

This is a decision on the petition under 37 C.F.R. § 1.137(b), filed May 21, 2007, to revive the above-identified application.

The petition is **GRANTED.**

The petition satisfies the conditions for revival pursuant to the provisions of 37 CFR 1.137(b) in that (1) the reply in the form of a Request for Continued Examination (RCE) and an Amendment; (2) the petition fee; and (3) the required statement of unintentional delay have been received. Accordingly, the response has been accepted as having been unintentionally delayed.

This matter is being referred to Technology Center 2100 for processing of the Request for Continued Examination under 37 CFR 1.114 filed with the instant petition.

Telephone inquiries regarding this decision should be directed to the undersigned at (571) 272-3206.

Liana Walsh
Petitions Examiner
Office of Petitions

UNITED STATES PATENT AND TRADEMARK OFFICE

Commissioner for Patents
United States Patent and Trademark Office
P.O. Box 1450
Alexandria, VA 22313-1450
www.uspto.gov

BRIAN S. STEINBERGER
101 BREVARD AVENUE
COCOA, FL 32922

COPY MAILED

FEB 28 2007

OFFICE OF PETITIONS

In re Application of	:	
Wing-Kit Choi et al	:	
Application No. 10/643,063	:	ON PETITION
Filed: August 18, 2003	:	
Attorney Docket No. UCF-372	:	

This is a decision on the petition under 37 CFR 1.137(b), filed August 29, 2006, to revive the above-identified application.

The petition is **GRANTED.**

The application became abandoned for failure to timely reply within the meaning of 37 CFR 1.113 to the final Office action, mailed November 1, 2005, which set a shortened statutory period for reply of three (3) months. No extensions of time were obtained under the provisions of 37 CFR 1.136(a). Accordingly, the application became abandoned on February 2, 2006. A Notice of Abandonment was mailed on August 1, 2006.

The petition satisfies the requirements of 37 CFR 1.137(b) in that petitioner has supplied (1) the required reply in the form of a request for continued examination, the $795 filing fee for the RCE, and submission as required by 37 CFR 1.114 (previously filed reply of January 26, 2006), (2) the petition fee of $1,500, and (3) a proper statement of unintentional delay. Accordingly, the failure to timely reply to the Office action of November 1, 2005 is accepted as being unintentionally delayed.

This application is being referred to Technology Center AU 2871 for processing of the RCE filed August 29, 2006 and for taking such further action as the nature of the case requires.

Telephone inquiries concerning this decision should be directed to the undersigned at (571) 272-3218.

Frances Hicks
Petitions Examiner
Office of Petitions

UNITED STATES PATENT AND TRADEMARK OFFICE

Commissioner for Patents
United States Patent and Trademark Office
P.O. Box 1450
Alexandria, VA 22313-1450
www.uspto.gov

WERTEN F W BELLAMY
2635 FOX MILL ROAD
RESTON VA 20191

COPY MAILED

SEP 12 2007

OFFICE OF PETITIONS

In re Application of :
Bunger, et al. :
Application No. 10/643,080 : ON PETITION
Filed: August 19, 2003 :
Attorney Docket No. CIP OF :
09/828,589

This is a decision on the petition to revive under 37 CFR 1.137(b), filed March 16, 2007.

The petition is **DISMISSED AS MOOT.**

The Office mailed a non-final Office action on September 13, 2006, which set a shortened statutory period for reply of three (3) months. On March 14, 2007, applicants filed a response, made timely by obtaining a three month extension of time and by including a Certificate of Mailing dated March 13, 2007.

In view of the above, the application is not currently abandoned.

The $1500 petition fee will be refunded to petitioner under separate cover.

The matter is being forwarded to Group Art Unit 1616 for examination in due course.

Telephone inquiries regarding this decision should be directed to the undersigned at (571)272-3207.

Cliff Congo
Petitions Attorney
Office of Petitions

SPE RESPONSE FOR CERTIFICATE OF CORRECTION

DATE : 1-19-07

Paper No.: _____

TO SPE OF : ART UNIT 3723

SUBJECT : Request for Certificate of Correction on Patent No.: 7039974 B2 / 10/643098

A response is requested with respect to the accompanying request for a certificate of correction.

Please complete this form and return with file, within 7 days to:
Palm location **7580, Certificates of Correction Branch – South Tower – 9A22**
If response is for an IFW, **return to employee (named below) via PUBSCofC Team in MADRAS.**
With respect to the change(s) requested, correcting Office and/or Applicant's errors, should the patent read as shown in the certificate of correction (COCIN)? No new matter should be introduced, nor should the scope or meaning of the claims be changed.

Should Fig. 8 Be Enter? Thanks

Eva James

Thank You For Your Assistance

Certificates of Correction Branch
Tel. No. 703-305-8309

The request for issuing the above-identified correction(s) is hereby:
Note your decision on the appropriate box.

- ☑ **Approved** — All changes apply.
- ☐ **Approved in Part** — Specify below which changes **do not** apply.
- ☐ **Denied** — State the reasons for denial below.

Comments: Changes APPROVED

LEE D. WILSON
PRIMARY EXAMINER

SPE

3723
Art Unit

UNITED STATES PATENT AND TRADEMARK OFFICE

COMMISSIONER FOR PATENTS
UNITED STATES PATENT AND TRADEMARK OFFICE
P.O. BOX 1450
ALEXANDRIA, VA 22313-1450
www.uspto.gov

IP DEPARTMENT OF PIPER RUDNICK LLP
ONE LIBERTY PLACE, SUITE 4900
1650 MARKET ST
PHILADELPHIA PA 19103

MAIL

MAY 12 2004

DIRECTOR OFFICE
TECHNOLOGY CENTER 2600

In re Application of:
Michael Arnouse
Application No. 10/643,101
Filed: 08/18/2003
For: APPARATUS, SYSTEM AND METHOD FOR AIRCRAFT SECURITY

DECISION ON PETITION TO MAKE SPECIAL

This is a decision on the Petition To Make Special under MPEP 708.02, XI: Invention for Countering Terrorism, filed August 18, 2003.

A grantable petition to make an application special under 37 C.F.R. § 1.102(d), and in accordance with MPEP 708.02, XI, for an invention which contributes to the countering of terrorism, must include the petition fee under 37 CFR 1.17(i). The petition must also be accompanied by a statement explaining how the invention contributes to countering terrorism. Examples of the types of technology for countering terrorism are set forth in MPEP 708.02, XI as including, but not limited to, systems for detecting/identifying explosives, aircraft sensors/security systems, and vehicular barricades/disabling systems.

The statements made in the petition show how the technology of the instant application directly contributes to the countering of terrorism.

Accordingly, the petition is **GRANTED**.

The application file is being forwarded to the examiner for expedited action in its turn.

Krista Zele
Special Program Examiner
Technology Center 2600
Communications
(703) 305- 4701

BEST AVAILABLE COPY

UNITED STATES PATENT AND TRADEMARK OFFICE

Commissioner for Patents
United States Patent and Trademark Office
P.O. Box 1450
Alexandria, VA 22313-1450
www.uspto.gov

ETHERTRONICS, INC.
9605 SCRANTON ROAD, SUITE 850
SAN DIEGO CA 92121

COPY MAILED

MAY 11 2006

OFFICE OF PETITIONS

In re Application of :
Krier, et al. :
Application No. 10/643,102 : ON PETITION
Filed: August 18, 2003 :
Attorney Docket No. 024833-2602//E108-US :
For: OPTIMIZED CAPACITIVE DIPOLE ANTENNA FOR SIZE

This is a decision on the petition under 37 CFR 1.137(b), filed March 27, 2006 (certificate of mailing March 22, 2006), to revive the above-identified application.

The above-identified application became abandoned for failure to reply to the non-final Office action mailed November 17, 2004, which set a shortened statutory period for reply of three (3) months. No extensions of time under the provisions of 37 CFR 1.136(a) were obtained. Accordingly, the application became abandoned on February 18, 2005. A Notice of Abandonment was mailed on June 30, 2005.

Petitioners have submitted an amendment in reply to the November 17, 2004 non-final Office action, an acceptable statement of the unintentional nature of the delay in responding to the November 17, 2004 non-final Office action, and the required petition fee.[1]

The petition is **GRANTED**.

The 373(b) statement filed on March 27, 2006 (certificate of mailing March 22, 2006) is not acceptable because G. Peter Albert Jr.'s title is missing. It is noted that different individuals signed the 373(b) statement and the power of attorney filed with the instant petition. The power

[1] The person signing the statement of delay was not in a position of directly knowing whether the entire period of delay was unintentional. If practitioner has minimal knowledge as to the nature of the delay, practitioner should make a reasonable inquiry into the reasons behind the delay. If it is discovered that the delay was not unintentional, practitioner must notify the Office promptly.

of attorney will not be entered at this time. A courtesy copy of this decision will be mailed to the address listed on the petition.

The application file is being forwarded to Technology Center AU 2821 for consideration of the amendment filed on March 27, 2006 (certificate of mailing March 22, 2006).

Telephone inquiries concerning this decision should be directed to the undersigned at (571) 272-3230.

E. Shirene Willis
Senior Petitions Attorney
Office of Petitions
Office of the Deputy Commissioner
for Patent Examination Policy

cc: FOLEY & LARDNER LLP
321 NORTH CLARK STREET
SUITE 2800
CHICAGO, IL 60610-4764

UNITED STATES PATENT AND TRADEMARK OFFICE

Commissioner for Patents
United States Patent and Trademark Office
P.O. Box 1450
Alexandria, VA 22313-1450
www.uspto.gov

COPY MAILED

JUN 18 2009

OFFICE OF PETITIONS

FOLEY AND LARDNER, LLP
3000 K STREET NW, SUITE 500
WASHINGTON, DC 20007

In re Application of :
Mark KRIER, et al. :
Application No. 10/643,102 : DECISION ON PETITION TO
Filed: August 18, 2003 : WITHDRAW FROM RECORD
Attorney Docket No. **ETRNS.020CP1** :

This is a decision on the Request to Withdraw as attorney or agent of record under 37 C.F.R. § 1.36(b), filed February 25, 2009.

The request is **DISMISSED** as moot.

A review of the file record indicates that the power of attorney to **FOLEY AND LARDNER, LLP** has been revoked by the assignee of the patent application on February 18, 2009. Accordingly, the request to withdraw under 37 C.F.R. § 1.36(b) is moot.

All future communications from the Office will continue to be directed to the below-listed address until otherwise notified by applicant.

Telephone inquires concerning this decision should be directed to the undersigned at 571-272-7253.

/Monica A. Graves/
Petitions Examiner, Office of Petitions

cc: **COASTAL PATENT, LLC**
P.O. BOX 232340
SAN DIEGO, CA 92193

UNITED STATES PATENT AND TRADEMARK OFFICE

Commissioner for Patents
United States Patent and Trademark Office
P.O. Box 1450
Alexandria, VA 22313-1450
www.uspto.gov

DINSMORE & SHOHL LLP
ONE DAYTON CENTRE, ONE SOUTH MAIN STREET
SUITE 1300
DAYTON, OH 45402-2023

COPY MAILED

JUL 18 2005

OFFICE OF PETITIONS

In re Patent of of
Hammarth et al.
Patent No. 6,905,084
Issued: June 14, 2005
Application No. 10/643,107
Filed: August 18, 2003
Attorney Docket No. ITW 0003 PA/13247

DECISION ACCORDING
STATUS UNDER 37 CFR 1.47(a)

This is a decision on the petition under 37 CFR 1.47(a), filed August 26, 2004.

The petition is **granted**.

The petition requests the acceptance of the declaration without the signature of inventor Kevin May.

The instant application issued as a patent on June 14, 2005.

The issuance of the patent raises possible issues regarding the current necessity of Rule 47 status. However, formally granting Rule 47(a) status at this stage can not harm petitioner. Therefore, the Office accords the instant application/patent Rule 47(a) status. The Office formally accepts the declaration without the signature of inventor Kevin May.

Telephone inquiries concerning this decision should be directed to Petitions Attorney Steven Brantley at (571) 272-3203.

Charles Steven Brantley
Petitions Attorney
Office of Petitions

UNITED STATES PATENT AND TRADEMARK OFFICE

COMMISSIONER FOR PATENTS
UNITED STATES PATENT AND TRADEMARK OFFICE
P.O. BOX 1450
ALEXANDRIA, VA 22313-1450
www.uspto.gov

Paper No.

THELEN REID BROWN
RAYSMAN & STEINER LLP
PO BOX 640640
SAN JOSE CA 95164-0640

COPY MAILED

JAN 08 2009

OFFICE OF PETITIONS

In re Application of :
Shor et al. : DECISION ON PETITION
Application No. 10/643,108 :
Filed: August 18, 2003 :
Atty Docket No. 5579/4 :

This is a decision on the PETITION FOR REVIVAL OF AN APPLICATION FOR PATENT ABANDONED UNINTENTIONALLY UNDER 37 CFR 1.137(b) filed June 18, 2008.

The petition is **GRANTED**.

The above-identified application became abandoned for failure to timely file a reply to the non-final Office action mailed July 6, 2007. This Office action set a shortened statutory period for reply of three (3) months, with extensions of time obtainable under § 1.136(a). No reply received and no extension of time obtained, the application became abandoned on October 7, 2007. A courtesy Notice of Abandonment was mailed on February 5, 2008.

The petition for revival, form PTO/SB/64 is electronically signed by practitioner Oren Reches with his registration number noted. (It is noted that the accompanying letter by practitioner Reches is not signed). The petition is accepted on the basis that attorney Reches is acting in a representative capacity. The petition includes payment of the petition fee, the required reply in the form of an amendment and the required statement of unintentional delay. No terminal disclaimer is required.

Technology Center AU 2611 has been advised of this decision. The application is, thereby, forwarded to the examiner for consideration of the reply submitted on petition filed June 18, 2008.

Telephone inquiries specific to this decision should be directed to the undersigned at (571) 272-3219.

Nancy Johnson
Senior Petitions Attorney
Office of Petitions

UNITED STATES PATENT AND TRADEMARK OFFICE

Commissioner for Patents
United States Patent and Trademark Office
P.O. Box 1450
Alexandria, VA 22313-1450
www.uspto.gov

J C PATENTS, INC.
4 VENTURE, SUITE 250
IRVINE, CA 92618

COPY MAILED

JAN 19 2005

OFFICE OF PETITIONS

In re Application of :
Huang, et al. :
Application No. 10/643,112 : ON PETITION
Filed: August 15, 2003 :
Attorney Docket No. UCIP380 :

This is a decision on the petition under 37 C.F.R. § 1.137(b), filed January 7, 2005, to revive the above-identified application.

The petition is **dismissed.**

Any request for reconsideration of this decision must be submitted within TWO (2) MONTHS from the mail date of this decision. Extensions of time under 37 CFR 1.136(a) are permitted. The reconsideration request should include a cover letter entitled "Renewed Petition under 37 CFR 1.137(b)."

This application became abandoned for failure to timely reply within three months to the Office action mailed May 12, 2004. Accordingly, this application became abandoned on August 13, 2004. A Notice of Abandonment was mailed on November 17, 2004.

Effective December 1, 1997, the provisions of 37 CFR 1.137(b) now provide that where the delay in reply was unintentional, a petition may be filed to revive an abandoned application pursuant to 37 CFR 1.137(b). A grantable petition pursuant to 37 CFR 1.137(b) must be accompanied by:

(1) the required reply, unless previously filed. In a nonprovisional application abandoned for failure to prosecute, the required reply may be met by the filing of a continuing application. In an application, abandoned or lapsed for failure to pay the issue fee or any portion thereof, the required reply must be the payment of the issue fee or any outstanding balance thereof.

(2) the petition fee as set forth in 37 CFR 1.17(m);

(3) a statement that the **entire** delay in filing the required reply from the due date for the reply until the filing of a grantable petition pursuant to 37 CFR 1.137(b) was unintentional. The Commissioner may require additional information where there is a question whether the delay was unintentional; and

(4) any terminal disclaimer (and fee set forth in 37 CFR 1.20(d)) required pursuant to 37 CFR 1.137(d).

The instant petition does not satisfy requirement (1) above.

The required reply has not been submitted. As such, the petition must be dismissed.

It is noted that petitioner states, "The Applicant has not received the Office Action of May 12, 2004 mentioned in the Notice of Abandonment. That is why the Applicant failed to file a reply. Applicant hereby requests the patent office send a copy of the Office Action of May 12, 2004 to the address specified in the attached Supplemental Declaration and Power of Attorney, so that a reply can be prepared."

If petitioner wishes to assert non-receipt of an Office action, petitioner should submit a petition under 37 CFR 1.181 to withdraw the holding of abandonment. No fee is required with a petition under 37 CFR 1.181. A petition under 37 CFR 1.181 to withdraw the holding of abandonment should be submitted to Technology Center 3700 and not the Office of Petitions.

Furthermore, please note, the showing required to establish non-receipt of an Office communication must include a statement from the practitioner stating that the Office communication was not received by the practitioner and attesting to the fact that a search of the file jacket and docket records indicates that the Office communication was not received. A copy of the docket record where the non-received Office communication would have been entered had it been received and docketed must be attached to and referenced in practitioner's statement. See Withdrawing the Holding of Abandonment When Office Actions Are Not Received; Notice 1156 Off. Gaz. Pat. Office 53 (November 16, 1993).

Further correspondence with respect to this matter should be addressed as follows:

By mail: Mail Stop Petition
Commissioner for Patents
Box 1450
Alexandria, VA 22313

By FAX: (703) 872-9306
Attn: Office of Petitions

By hand: Customer Service Window
Randolph Building
401 Dulany Street
Alexandria, VA 22314

Telephone inquiries should be directed to the undersigned at (571)272-3228.

Edward J. Tannouse
Petitions Attorney
Office of Petitions
United States Patent and Trademark Office

Attachments:
May 12, 2004 Office Action

UNITED STATES PATENT AND TRADEMARK OFFICE

Commissioner for Patents
United States Patent and Trademark Office
P.O. Box 1450
Alexandria, VA 22313-1450
www.uspto.gov

J C PATENTS, INC.
4 VENTURE, SUITE 250
IRVINE, CA 92618

COPY MAILED

JAN 19 2005

OFFICE OF PETITIONS

In re Application of :
Huang, et al. :
Application No. 10/643,112 : ON PETITION
Filed: August 15, 2003 :
Attorney Docket No. UCIP380 :

This is a decision on the petition under 37 C.F.R. § 1.137(b), filed January 7, 2005, to revive the above-identified application.

The petition is **dismissed.**

Any request for reconsideration of this decision must be submitted within TWO (2) MONTHS from the mail date of this decision. Extensions of time under 37 CFR 1.136(a) are permitted. The reconsideration request should include a cover letter entitled "Renewed Petition under 37 CFR 1.137(b)."

This application became abandoned for failure to timely reply within three months to the Office action mailed May 12, 2004. Accordingly, this application became abandoned on August 13, 2004. A Notice of Abandonment was mailed on November 17, 2004.

Effective December 1, 1997, the provisions of 37 CFR 1.137(b) now provide that where the delay in reply was unintentional, a petition may be filed to revive an abandoned application pursuant to 37 CFR 1.137(b). A grantable petition pursuant to 37 CFR 1.137(b) must be accompanied by:

> (1) the required reply, unless previously filed. In a nonprovisional application abandoned for failure to prosecute, the required reply may be met by the filing of a continuing application. In an application, abandoned or lapsed for failure to pay the issue fee or any portion thereof, the required reply must be the payment of the issue fee or any outstanding balance thereof.

(2) the petition fee as set forth in 37 CFR 1.17(m);

(3) a statement that the entire delay in filing the required reply from the due date for the reply until the filing of a grantable petition pursuant to 37 CFR 1.137(b) was unintentional. The Commissioner may require additional information where there is a question whether the delay was unintentional; and

(4) any terminal disclaimer (and fee set forth in 37 CFR 1.20(d)) required pursuant to 37 CFR 1.137(d).

The instant petition does not satisfy requirement (1) above.

The required reply has not been submitted. As such, the petition must be dismissed.

It is noted that petitioner states, "The Applicant has not received the Office Action of May 12, 2004 mentioned in the Notice of Abandonment. That is why the Applicant failed to file a reply. Applicant hereby requests the patent office send a copy of the Office Action of May 12, 2004 to the address specified in the attached Supplemental Declaration and Power of Attorney, so that a reply can be prepared."

If petitioner wishes to assert non-receipt of an Office action, petitioner should submit a petition under 37 CFR 1.181 to withdraw the holding of abandonment. No fee is required with a petition under 37 CFR 1.181. A petition under 37 CFR 1.181 to withdraw the holding of abandonment should be submitted to Technology Center 3700 and not the Office of Petitions.

Furthermore, please note, the showing required to establish non-receipt of an Office communication must include a statement from the practitioner stating that the Office communication was not received by the practitioner and attesting to the fact that a search of the file jacket and docket records indicates that the Office communication was not received. A copy of the docket record where the non-received Office communication would have been entered had it been received and docketed must be attached to and referenced in practitioner's statement. See Withdrawing the Holding of Abandonment When Office Actions Are Not Received; Notice 1156 Off. Gaz. Pat. Office 53 (November 16, 1993).

Further correspondence with respect to this matter should be addressed as follows:

By mail: Mail Stop Petition
Commissioner for Patents
Box 1450
Alexandria, VA 22313

By FAX: (703) 872-9306
Attn: Office of Petitions

By hand: Customer Service Window
Randolph Building
401 Dulany Street
Alexandria, VA 22314

Telephone inquiries should be directed to the undersigned at (571)272-3228.

Edward J. Tannouse
Petitions Attorney
Office of Petitions
United States Patent and Trademark Office

Attachments:
May 12, 2004 Office Action

2836/P192US

Commissioner for Patents
United States Patent and Trademark Office
Washington, D.C. 20231
www.uspto.gov

RECEIVED
MAR 31 2003

Paper No. 3

JAMES J MURPHY ESQ
WINSTEAD SECHREST & MINICK
5400 RENAISSANCE TOWER
1201 ELM STREET
DALLAS TX 75270

DOCKETED
AMA 4/1/03

COPY MAILED
MAR 28 2003
OFFICE OF PETITIONS

In re Application of :
Yu Qing Yang and John Laurence Melanson :
Application No. 10/162,324 : DECISION ON PETITION
Filed: June 24, 2002 :
Attorney Docket No. 1339-CA(P192US) :

This is a decision on the "Petition Under 37 CFR 1.182 to Change the Name Order of the Joint Inventors", filed September 16, 2002 (Certificate of Mailing dated September 9, 2002). The Office apologizes for the delay.

The petition under 37 CFR 1.182 is **GRANTED**.

Petitioner has paid the petition fee under 37 CFR 1.182 and indicated the desired order of inventorship.

Records in the above-identified application have been changed to reflect that Yu Qing Yang is the first named inventor, while John Laurence Melanson is the second named inventor.

The application file is being forwarded to Technology Center 2800 for prosecution.

Telephone inquiries concerning this decision may be directed to the undersigned at (703) 305-0272.

Cliff Congo
Petitions Attorney
Office of Petitions

UNITED STATES PATENT AND TRADEMARK OFFICE

Commissioner for Patents
United States Patent and Trademark Office
P.O. Box 1450
Alexandria, VA 22313-1450
www.uspto.gov

COPY MAILED

NOV 18 2009

OFFICE OF PETITIONS

AKIN GUMP STRAUSS HAUER & FELD LLP
P.O. BOX 688
DALLAS, TX 75313-0688

In re Patent No. 6,888,474 :
Issue Date: May 3, 2005 :
Application No. 10/643,135 : ON PETITION
Filed: August 18, 2003 :
Attorney Docket No. LVS 0014 :

This is a decision in response to a petition filed September 14, 2009, under 37 CFR 1.378(c), to accept the unintentionally delayed payment of a maintenance fee for the above-identified patent.

The petition is **GRANTED.**

This patent expired on May 4, 2009 for failure to pay the 3 ½ year maintenance fee. Since this petition was submitted within twenty-four months after the six-month grace period provided in 37 CFR 1.362(e), the petition was timely filed under the provisions of 37 CFR 1.378(c).

The maintenance fee is hereby accepted and the above-identified patent is reinstated as of the mail date of this decision.

It is not apparent whether the person signing the statement of unintentional delay was in a position to have firsthand or direct knowledge of the facts and circumstances of the delay at issue. Nevertheless, such statement is being treated as having been made as the result of a reasonable inquiry into the facts and circumstances of such delay. In the event that such an inquiry has not been made, petitioner must make such an inquiry. If such inquiry results in the discovery that the delay in paying the maintenance fee under 37 CFR 1.378(c) was intentional, petitioner must notify the Office.

There is no indication that the person signing the petition was ever given a power of attorney or authorization of agent to prosecute the application. However in accordance with 37 CFR 1.34 (a), the signature appearing on the correspondence shall constitute a representation to the United States Patent and Trademark Office that he/she is authorized to represent the particular party on whose behalf he/she acts. If the person signing the petition desires to receive future correspondence regarding this application, the appropriate power of attorney or authorization of agent must be submitted. A courtesy copy of this decision is being mailed to the person signing the petition; however, all future correspondence regarding this patent will be directed solely to the above noted correspondence address currently of record.

Petitioner will not receive future correspondence related to maintenance fees for the patent unless a "Fee Address" Indication Form (see PTO/SB/47) is submitted.

The patent file is being forwarded to Files Repository.

Telephone inquiries concerning this decision should be directed to the undersigned at (571) 272-6059.

Alicia Kelley
Petitions Examiner
Office of Petitions

cc: ROBERT C. KLINGER
LAW OFFICE OF ROBERT C. KLINGER
2591 DALLAS PARKWAY, SUITE 300
FRISCO, TX 75034

UNITED STATES PATENT AND TRADEMARK OFFICE

COMMISSIONER FOR PATENTS
UNITED STATES PATENT AND TRADEMARK OFFICE
P.O. BOX 1450
ALEXANDRIA, VA 22313-1450
www.uspto.gov

PERMAN & GREEN
425 POST ROAD
FAIRFIELD, CT 06824

COPY MAILED

JAN 2 1 2004

OFFICE OF PETITIONS

In re Application of

Sheahan, et al.

Application No. 10/643,142

Filed: August 18, 2003

Attorney Docket No

DECISION ON PETITION

This is a decision on the petition under 37 CFR 1.10 filed, October 20, 2003.

The petition is **dismissed.**

Any request for reconsideration of this decision must be submitted within TWO (2) MONTHS from the mail date of this decision. Extensions of time under 37 CFR 1.136(a) are permitted. The reconsideration request should include a cover letter entitled "Renewed Petition" under 37 CFR 1.10."

The instant petition was filed to correct what petitioner believed was an incorrect filing date accorded the above-cited application. Petitioner maintains that the correct filing date for the application should be August 12, 2003, not the currently accorded date of August 18, 2003. In support thereof, petitioner filed a copy of the Express Mail label EV89259475US showing a "date-in" of August 18, 2003.

Section 1.10(a) of the Title 37 of the Code of Federal Regulations indicates that correspondence received by the Patent and Trademark Office that was delivered by Express Mail will be considered filed in the Office on the date of deposit with the United States Postal Service. Where there is a discrepancy between the date of deposit as shown on the Express Mail label and the filing date accorded the correspondence by the Office, 37 CFR 1.10(c) provides that an applicant may petition to have the Commissioner accord the correspondence a filing date as of the "date in" on Express Mail label. In accordance with 37 CFR 1.10(c), a successful petition must:

> (1) . . . be filed promptly after the person becomes aware that the Office has accorded or will accord a filing date other than the USPS deposit date;

2) [provide] the number on the Express Mail mailing label was placed on a paper(s) or fee(s) that constituted the correspondence prior to the original mailing by Express Mail; and

(3) . . . include a true copy of the Express Mail mailing label showing the date-in and of any other official notation by the USPS relied upon to show the date of deposit.

The instant petition does not satisfy the requirements of item (2) above.

Relative to item (2), no paper was found among the application or petition papers that provided the number of the Express Mail label that constituted the correspondence prior to the original mailing. Petitioner must establish that the Express Mail label number EV286259475US was on the application transmittal form, cover sheet, or other paper allegedly filed with the original application papers on August 12, 2003. The space provided for the Express Mail number on the application transmittal form filed with the application papers was blank. In order to get the filing date of August 12, 2003, petitioner must provide a paper filed with the original application papers that cited the Express Mail label EV28625975US.

Further correspondence with respect to this matter should be addressed as follows:

By mail:	Mail Stop Petitions Commissioner for Patents Box 1450 Alexandria, VA 22313-1450
By facsimile:	(703) 872-9306 Attn: Office of Petitions
By hand:	Office of Petitions 2201 South Clark Place Crystal Plaza 4, Suite 3C23 Arlington, VA 22202

Telephone inquiries concerning this decision should be directed to the undersigned at (703) 305-0010.

Kenya A. McLaughlin
Petitions Attorney
Office of Petitions

3725

UNITED STATES PATENT AND TRADEMARK OFFICE

COMMISSIONER FOR PATENTS
UNITED STATES PATENT AND TRADEMARK OFFICE
P.O. BOX 1450
ALEXANDRIA, VA 22313-1450
www.uspto.gov

KEVIN SHEAHAN
4190 DANCEGLEN DRIVE
COLORADO SPRINGS, CO 80906

COPY MAILED

FEB 09 2004

OFFICE OF PETITIONS

In re Application of

Sheahan, et al.

Application No. 10/643,142

Filed: August 18, 2003

Attorney Docket No

DECISION ON PETITION

This is a decision on the petition under 37 CFR 1.10 filed, October 20, 2003.

The decision mailed January 21, 2004, is vacated as the decision was sent to an incorrect address and would not have been received by the petitioner.

The petition is **dismissed.**

Any request for reconsideration of this decision must be submitted within TWO (2) MONTHS from the mail date of this decision. Extensions of time under 37 CFR 1.136(a) are permitted. The reconsideration request should include a cover letter entitled "Renewed Petition" under 37 CFR 1.10."

The instant petition was filed to correct what petitioner believed was an incorrect filing date accorded the above-cited application. Petitioner maintains that the correct filing date for the application should be August 12, 2003, not the currently accorded date of August 18, 2003. In support thereof, petitioner filed a copy of the Express Mail label EV89259475US showing a "date-in" of August 18, 2003.

Section 1.10(a) of the Title 37 of the Code of Federal Regulations indicates that correspondence received by the Patent and Trademark Office that was delivered by Express Mail will be considered filed in the Office on the date of deposit with the United States Postal Service. Where there is a discrepancy between the date of deposit as shown on the Express Mail label and the filing date accorded the correspondence by the Office, 37 CFR 1.10(c) provides that an applicant may petition to have the Commissioner accord the correspondence a filing date as of the "date in" on Express Mail label. In accordance with 37 CFR 1.10(c), a successful petition must:

(1) . . . be filed promptly after the person becomes aware that the Office has accorded

or will accord a filing date other than the USPS deposit date;

2) [provide] the number on the Express Mail mailing label was placed on a paper(s) or fee(s) that constituted the correspondence prior to the original mailing by Express Mail; and

(3) . . . include a true copy of the Express Mail mailing label showing the date-in and of any other official notation by the USPS relied upon to show the date of deposit.

The instant petition does not satisfy the requirements of item (2) above.

Relative to item (2), no paper was found among the application or petition papers that provided the number of the Express Mail label that constituted the correspondence prior to the original mailing. Petitioner must establish that the Express Mail label number EV286259475US was on the application transmittal form, cover sheet, or other paper allegedly filed with the original application papers on August 12, 2003. The space provided for the Express Mail number on the application transmittal form filed with the application papers was blank. In order to get the filing date of August 12, 2003, petitioner must provide a paper filed with the original application papers that cited the Express Mail label EV28625975US.

Further correspondence with respect to this matter should be addressed as follows:

By mail: Mail Stop Petitions
Commissioner for Patents
Box 1450
Alexandria, VA 22313-1450

By facsimile: (703) 872-9306
Attn: Office of Petitions

By hand: Office of Petitions
2201 South Clark Place
Crystal Plaza 4, Suite 3C23
Arlington, VA 22202

Telephone inquiries concerning this decision should be directed to the undersigned at (703) 305-0010.

Kenya A. McLaughlin
Petitions Attorney
Office of Petitions

SHEAHAN / BULK
719.538.5731

REPLACEMENT SHEET

3/28

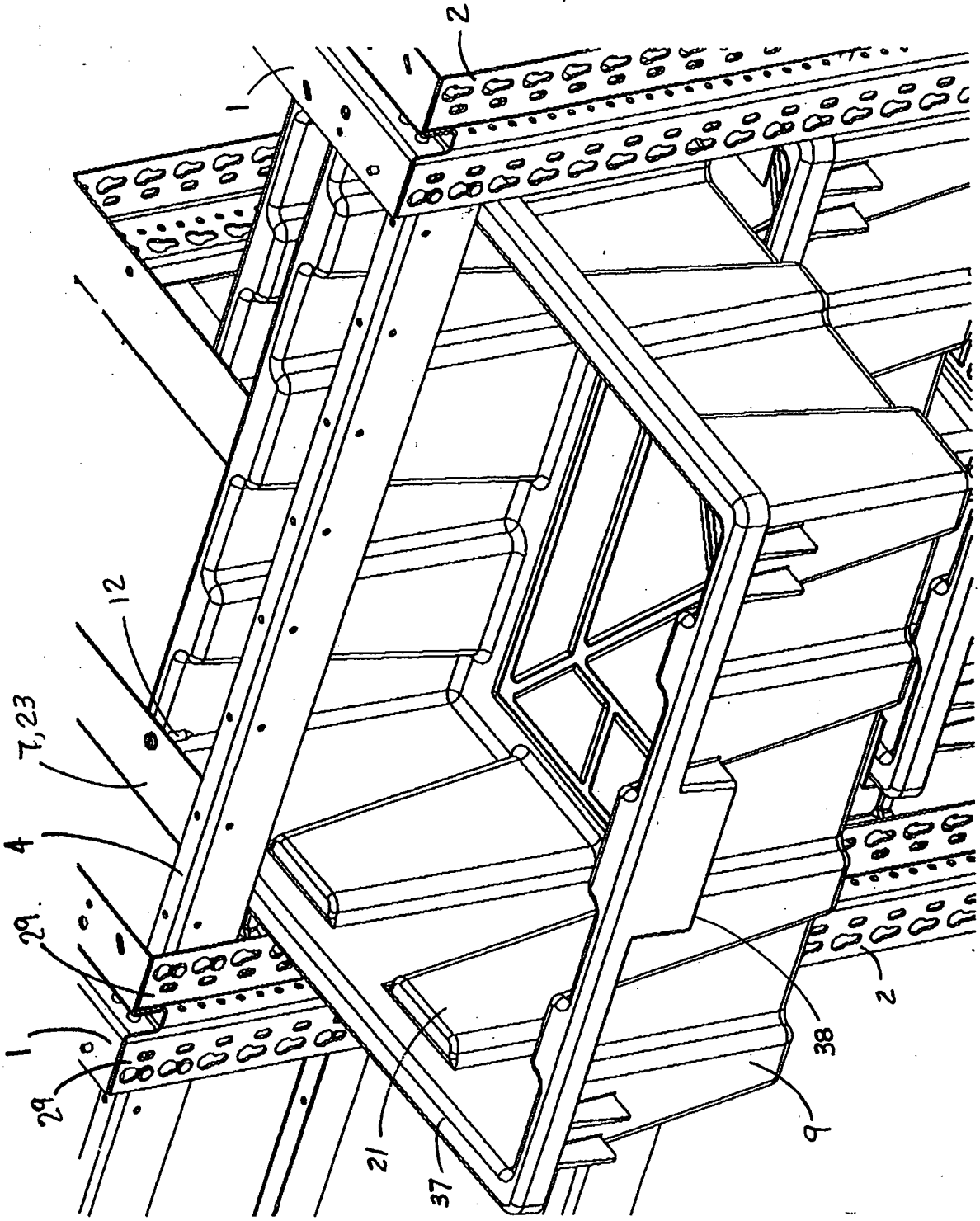

FIG. 3

OIPE
DEC 29 2005
PATENT & TRADEMARK OFFICE
IAP19

SHEAHAN / BULK
719.538.5731

REPLACEMENT SHEET

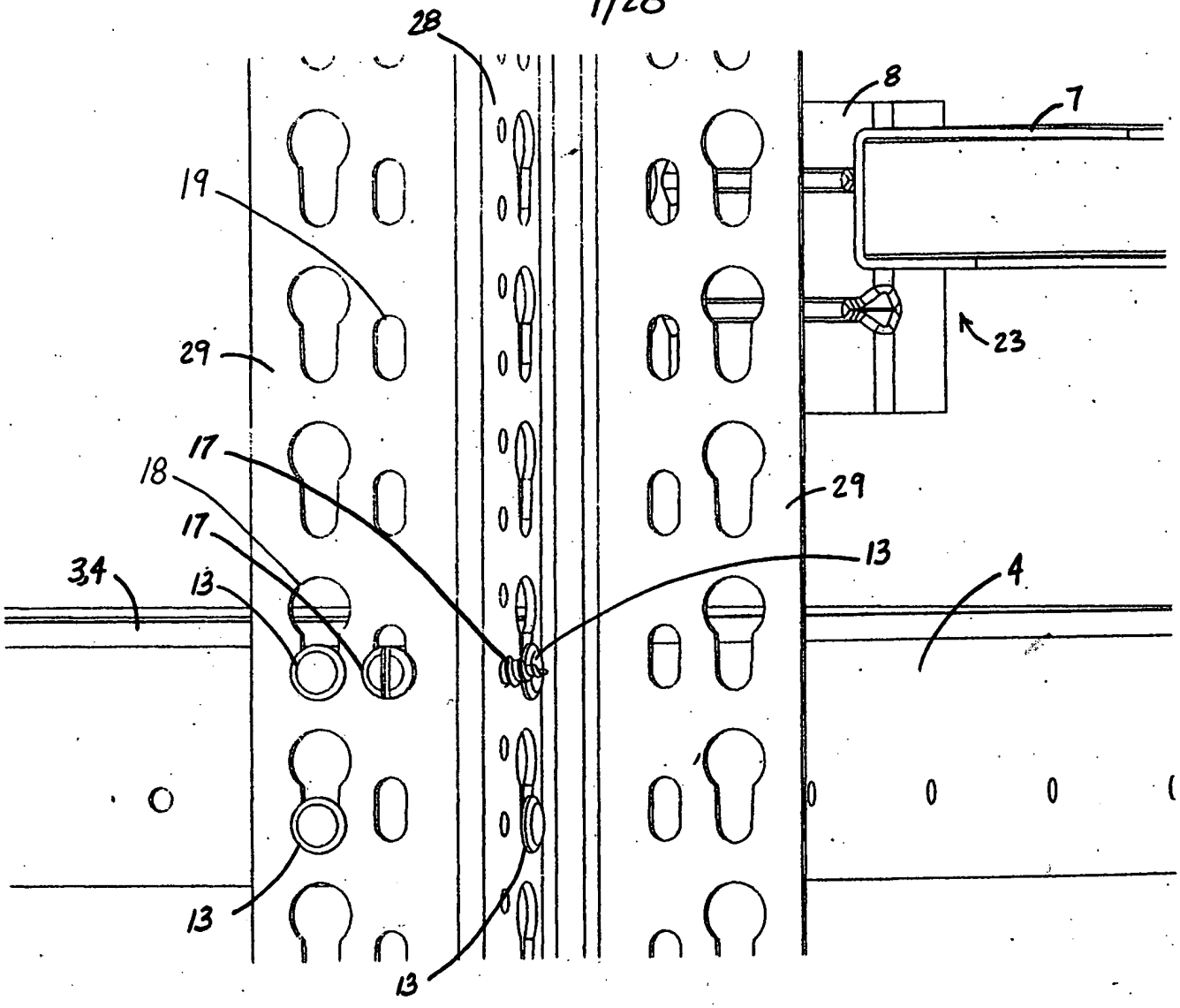

FIG. 9

SHEAHAN / BULK
719.538.5731

"REPLACEMENT SHEET"

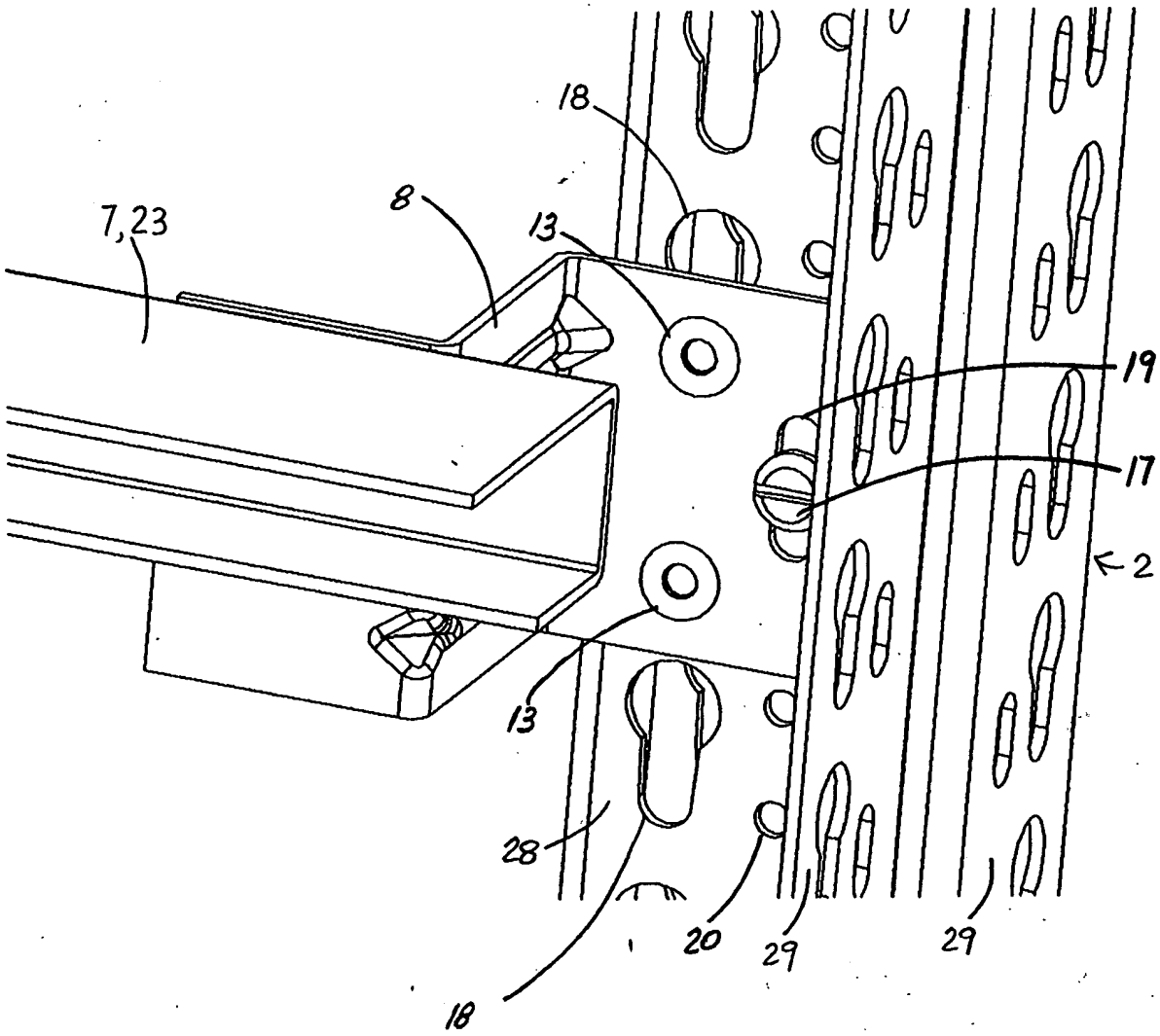

FIG. 10

SHEAHAN / BULK
719.538.5731

REPLACEMENT SHEET

11/28

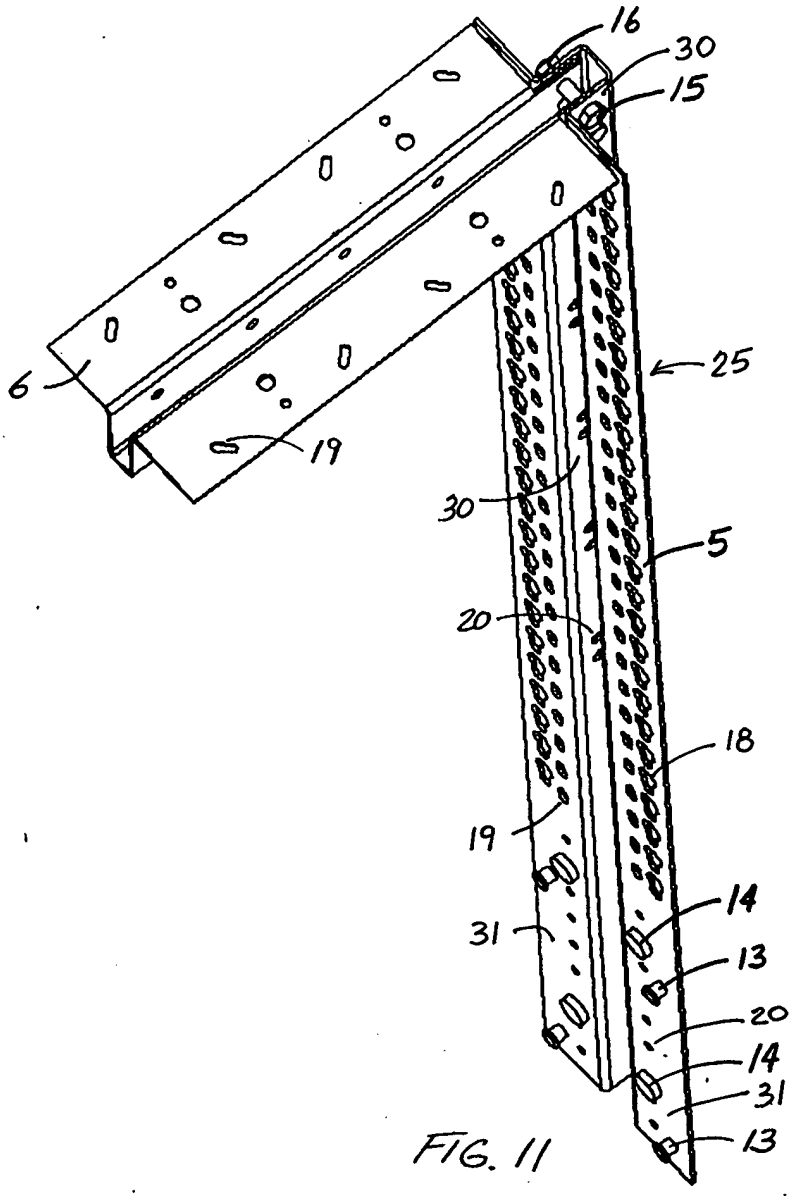

FIG. 11

SHEAHAN / BULK
719.538.5731

REPLACEMENT SHEET

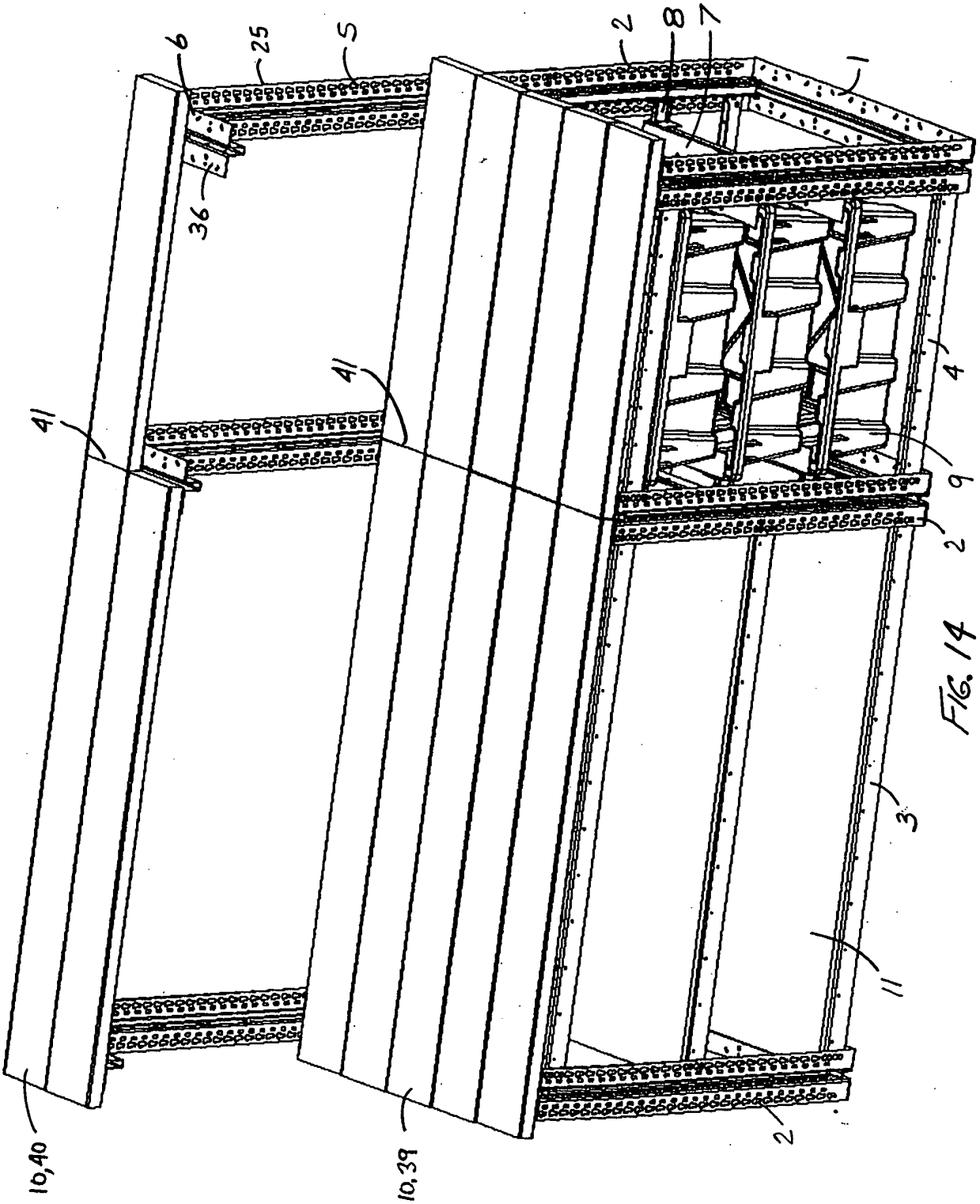

FIG. 14

SHEAHAN / BULK
719.538.5731

REPLACEMENT SHEET

15/28

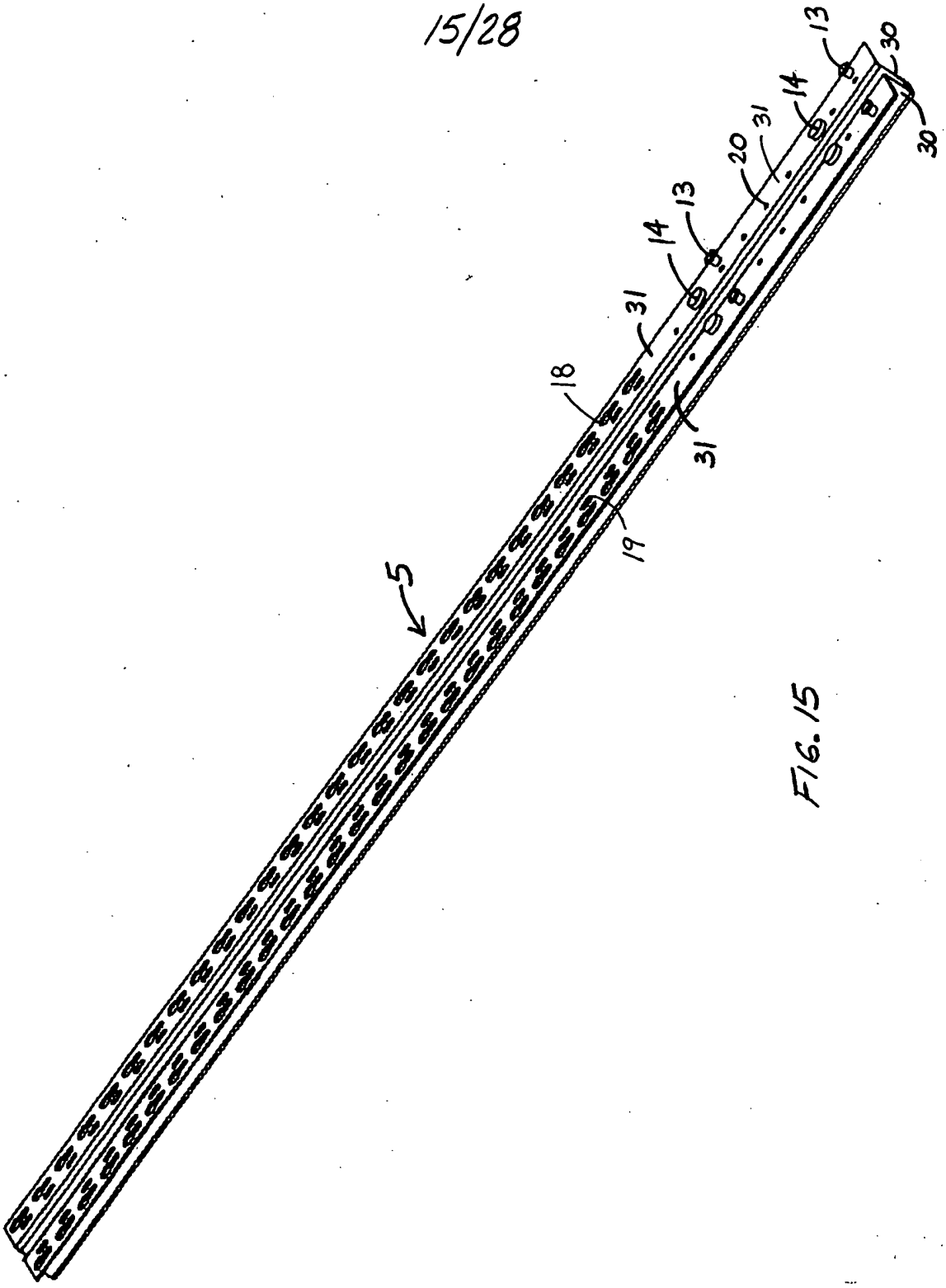

FIG. 15

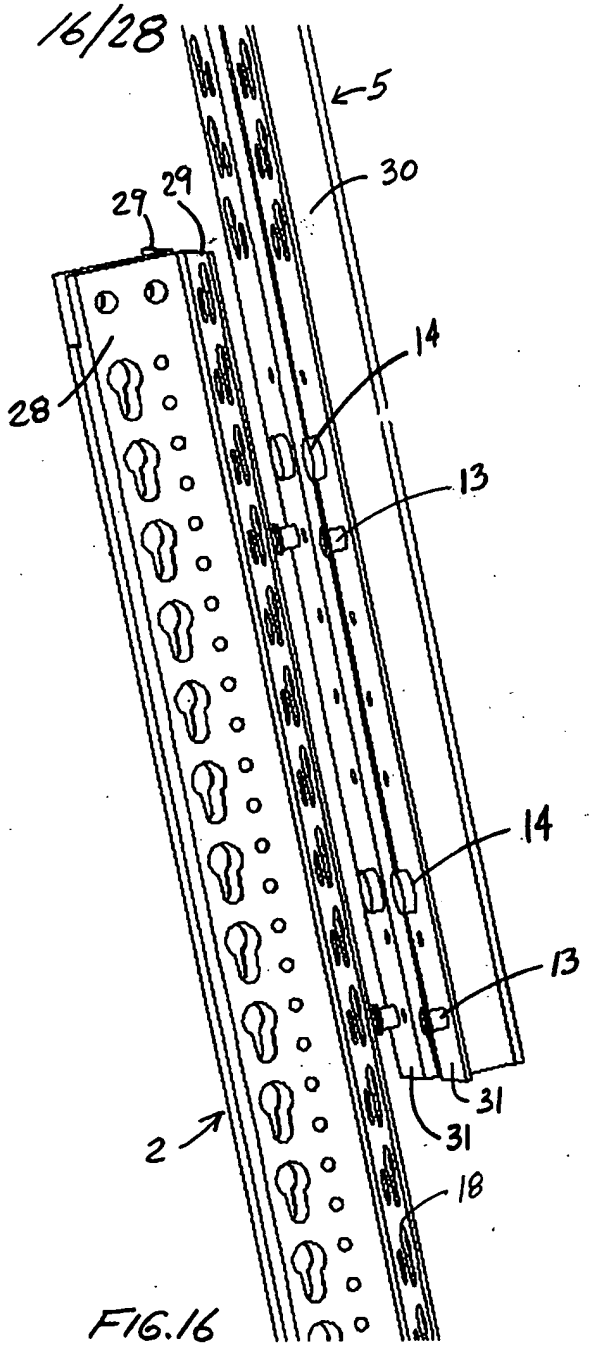

FIG. 16

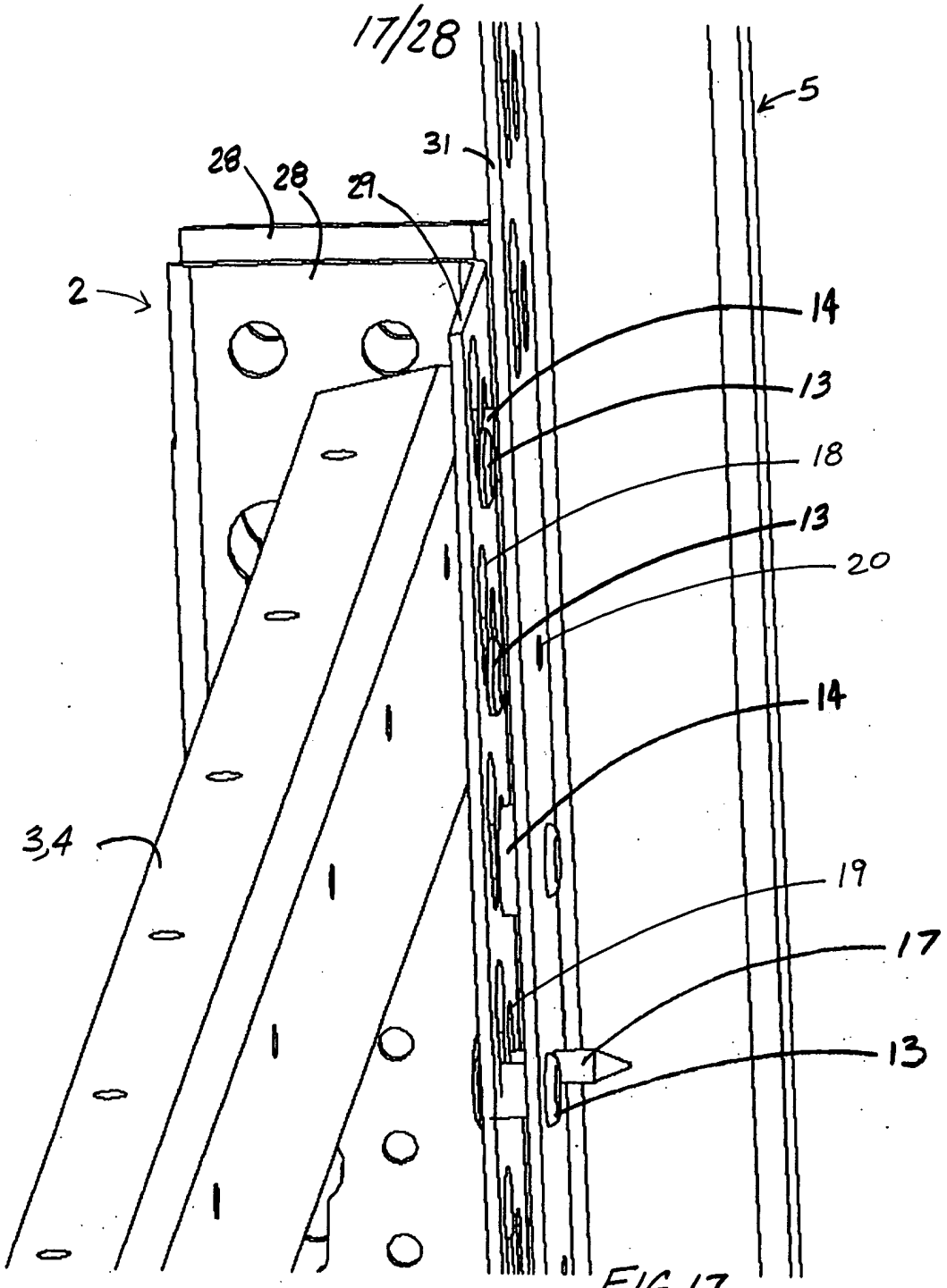

FIG. 17

SHEAHAN / BULK
719.538.5731

REPLACEMENT SHEET

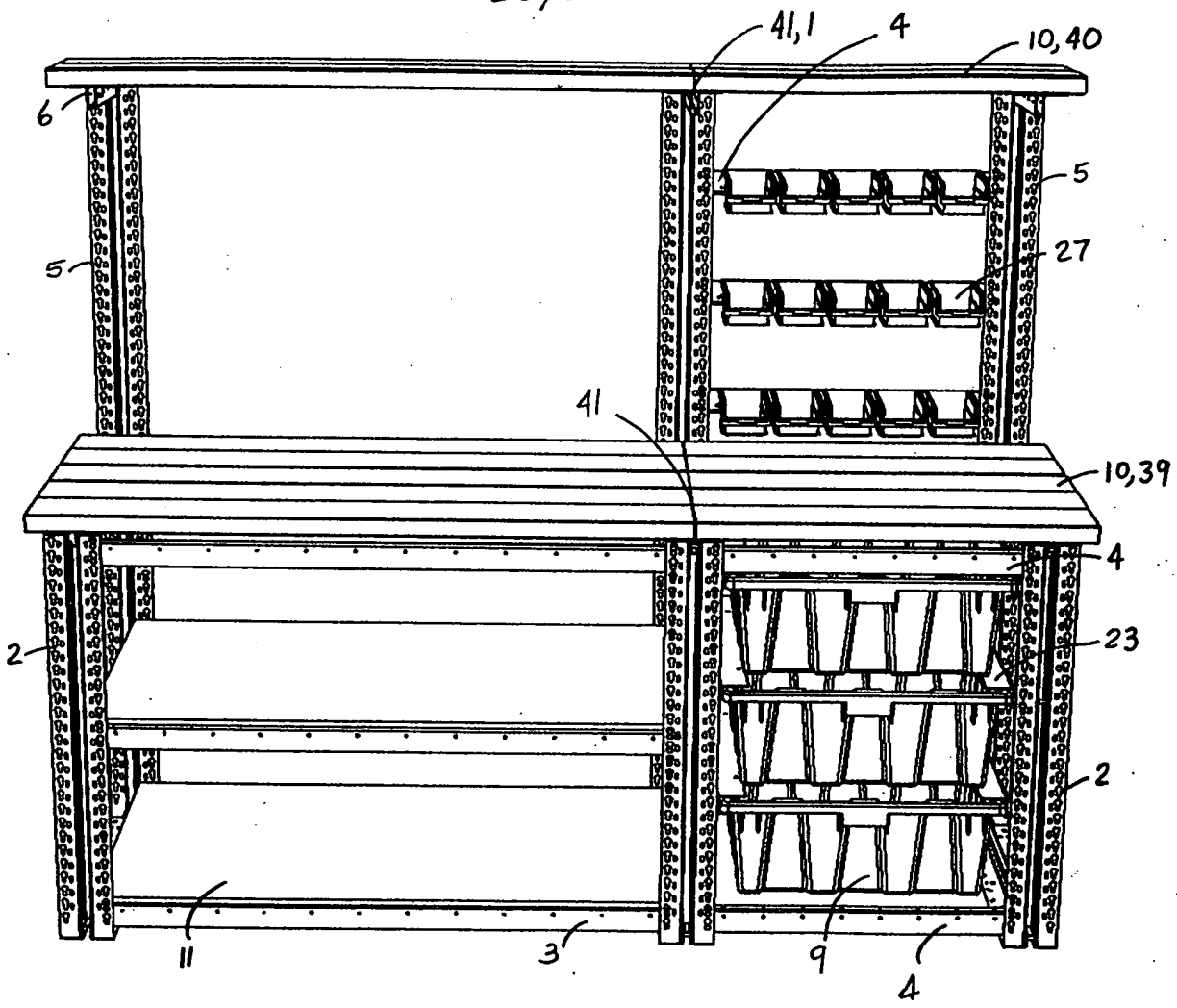

FIG. 26

SHEAHAN / BULK
719.538.5731

REPLACEMENT SHEET

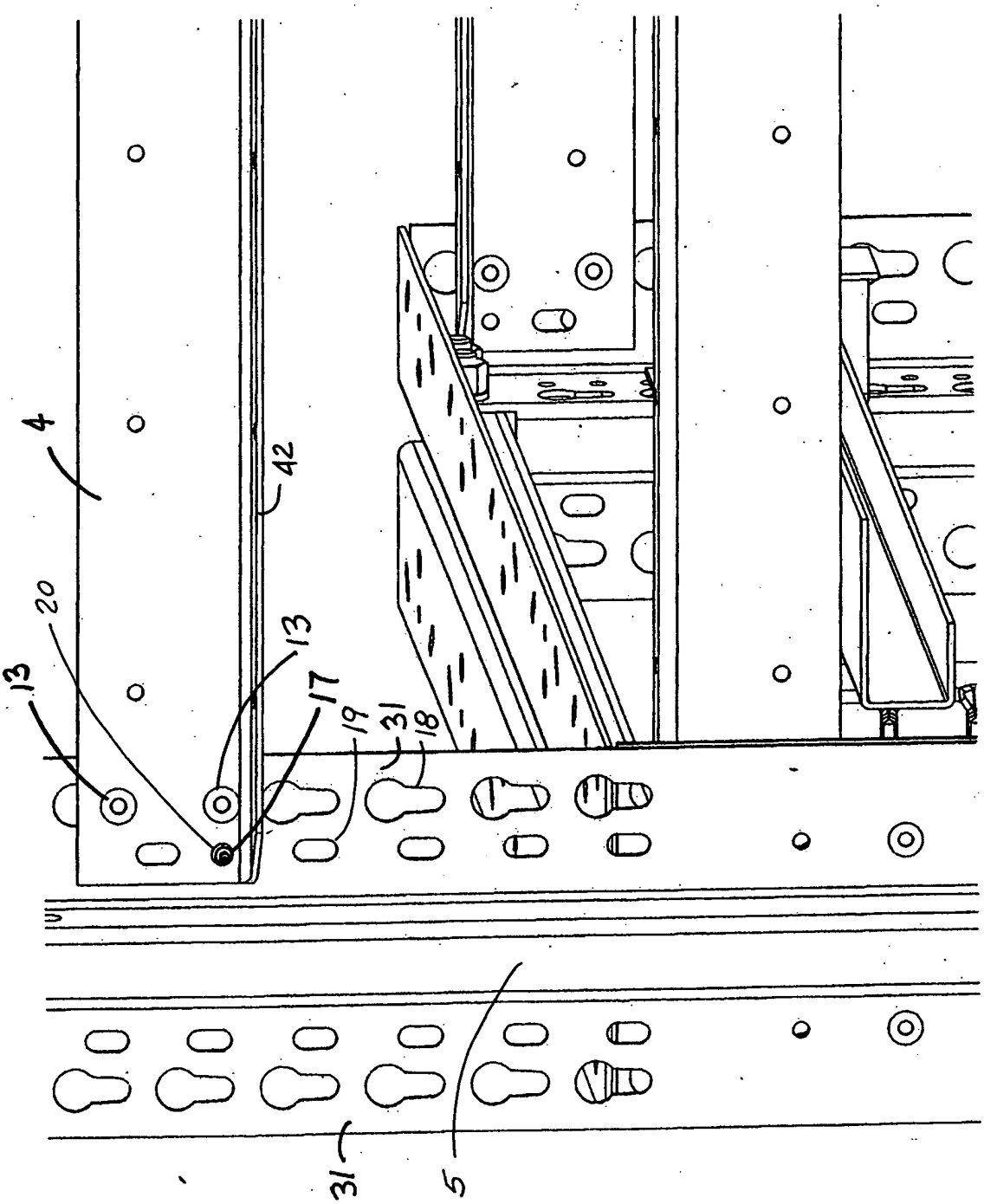

FIG. 27

SHEAHAN / BULK
719.538.5731

REPLACEMENT SHEET

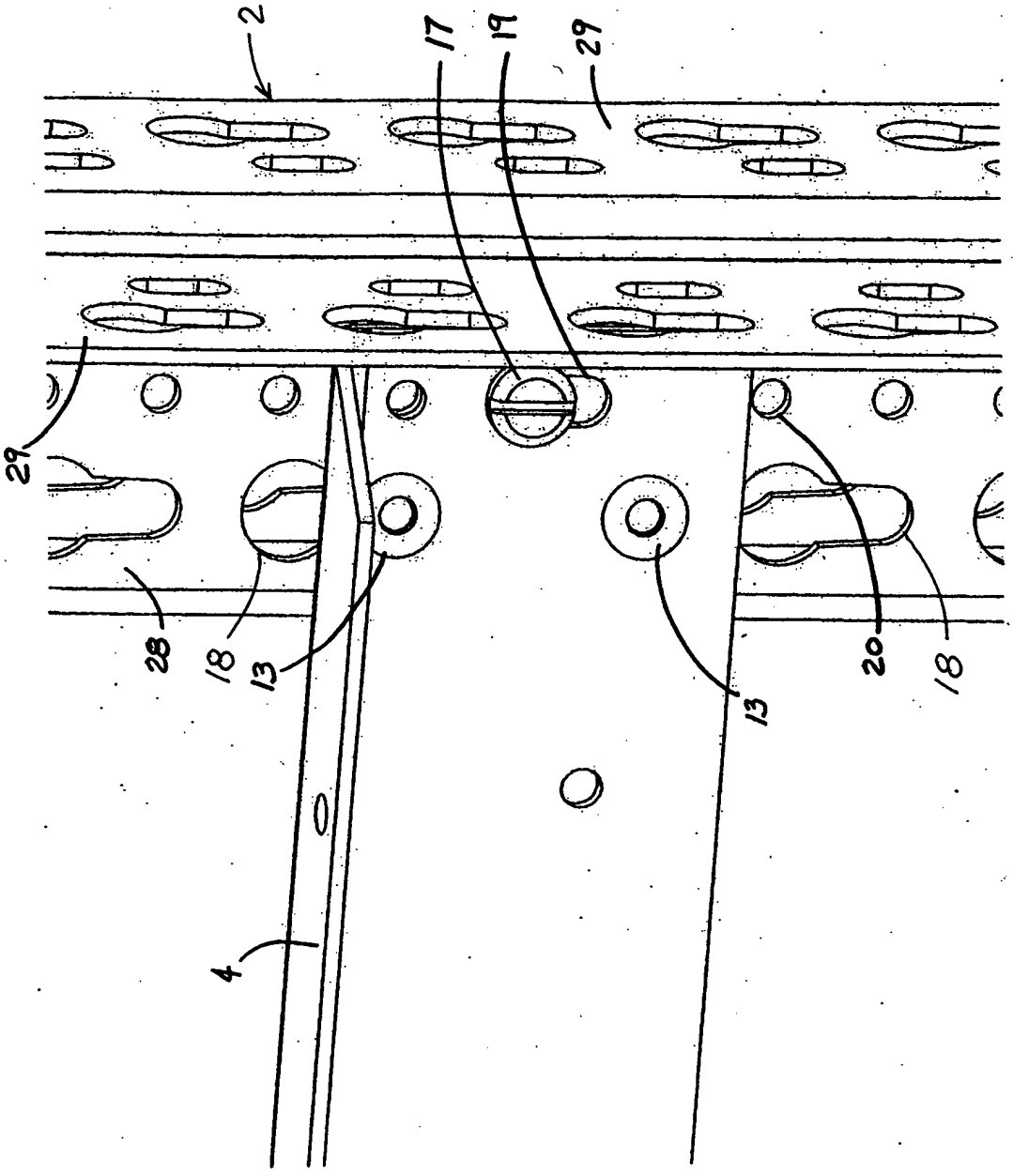

FIG. 28

UNITED STATES PATENT AND TRADEMARK OFFICE

1774

Commissioner for Patents
United States Patent and Trademark Office
P.O. Box 1450
Alexandria, VA 22313-1450
www.uspto.gov

AARON WININGER
SQUIRE SANDERS & DEMPSEY, LLP
600 HANSEN WAY
PALO ALTO, CA 94304-1043

COPY MAILED

JUN 21 2004

OFFICE OF PETITIONS

In re Application of :
Gwang Hoon Kwag et al :
Application No. 10/643,144 : NOTICE
Filed: August 18, 2003 :
Attorney Docket No. 61282.00007

This is a notice regarding your request for acceptance of a fee deficiency submission under 37 CFR 1.28. On September 1, 1998, the Court of Appeals for the Federal Circuit held that 37 CFR 1.28(c) is the sole provision governing the time for correction of the erroneous payment of the issue fee as a small entity. **See DH Technology v. Synergystex International, Inc. 154 F.3d 1333, 47 USPQ2d 1865 (Fed. Cir. Sept. 1, 1998).**

The Office no longer investigates or rejects original or reissue applications under 37 CFR 1.56. **1098 Off. Gaz. Pat. Office 502 (January 3, 1989)**. Therefore, nothing in this Notice is intended to imply that an investigation was done.

Your fee deficiency submission under 37 CFR 1.28 is hereby **ACCEPTED**.

Inquiries related to this communication should be directed to the Office of Petitions Staff at (703) 305-9285.

This file is being forwarded to Technology Center AU 1774.

Irvin Dingle
Petitions Examiner
Office of Petitions
Office of the Deputy Commissioner
for Patent Examination Policy

SPE RESPONSE FOR CERTIFICATE OF CORRECTION

Paper No.: _____

DATE : 10-27-06

TO SPE OF : ART UNIT 3748

SUBJECT : Request for Certificate of Correction for Appl. No.: 10/643147 Patent No.: 7111460

Please respond to this request for a certificate of correction within 7 days.

Please review the requested changes/corrections as shown in the **COCIN** document(s) in the IFW application image. No new matter should be introduced, nor should the scope or meaning of the claims be changed.

check col

Please complete the response (see below) and forward the completed response to scanning using document code **COCX**.

Certificates of Correction Branch

703-308-9390 ext. 117

Thank You For Your Assistance

The request for issuing the above-identified correction(s) is hereby:

Note your decision on the appropriate box.

- ☒ **Approved** — All changes apply.
- ☐ **Approved in Part** — Specify below which changes do not apply.
- ☐ **Denied** — State the reasons for denial below.

Comments: _____

HOANG NGUYEN
PRIMARY EXAMINER
09/29/07

THOMAS DENION
SUPERVISORY PATENT EXAMINER
TECHNOLOGY CENTER 3700
SPE

3748
Art Unit

UNITED STATES PATENT AND TRADEMARK OFFICE

Commissioner for Patents
United States Patent and Trademark Office
P.O. Box 1450
Alexandria, VA 22313-1450
www.uspto.gov

NUTTER MCCLENNEN & FISH LLP
WORLD TRADE CENTER WEST
155 SEAPORT BOULEVARD
BOSTON MA 02210-2604

COPY MAILED

AUG 17 2004

OFFICE OF PETITIONS

In re Application of :
Greene et al. : NOTICE
Application No. 10/643,164 :
Filed: August 18, 2003 :
Attorney Docket No. 102323-0130 :

This is a notice regarding your request for acceptance of a fee deficiency submission under 37 CFR 1.28(c), filed July 12, 2004.

37 CFR 1.28(c) states: "The deficiency is based on the amount of the fee, for other than a small entity, in effect at the time the deficiency is paid in full."

The fee deficiency submission under 37 CFR 1.28 is hereby **accepted.** The change of status to a large entity has been entered and made of record. This Notice is not intended to imply that an investigation was performed.

Telephone inquiries concerning this matter may be directed to the undersigned at (703) 306-5589.

Christina Tartera Donnell

Christina Tartera Donnell
Senior Petitions Attorney
Office of Petitions

UNITED STATES PATENT AND TRADEMARK OFFICE

Commissioner for Patents
United States Patent and Trademark Office
P.O. Box 1450
Alexandria, VA 22313-1450
www.uspto.gov

PILLSBURY WINTHROP SHAW PITTMAN
P.O. BOX 10500
MCLEAN, VA 22102

COPY MAILED

DEC 2 2 2005

OFFICE OF PETITIONS

In re Application of :
Martinus Hendricus Hendricus Hoeks et al :
Application No. 10/643,167 : ON PETITION
Filed: August 19, 2003 :
Attorney Docket No. 0814680305463 :

This is a decision on the petition under 37 CFR 1.313(c), filed December 15, 2005, which is being treated under 37 CFR 1.313(c)(2), to withdraw the above-identified application from issue after payment of the issue fee.

The petition is **GRANTED**.

The above-identified application is withdrawn from issue for consideration of a submission under 37 CFR 1.114 (request for continued examination). See 37 CFR 1.313(c)(2).

Petitioner is advised that the issue fee paid on November 1, 2005 in the above-identified application cannot be refunded. If, however, the above-identified application is again allowed, petitioner may request that it be applied towards the issue fee required by the new Notice of Allowance.[1]

Telephone inquiries should be directed to Wan Laymon at (571) 272-3220.

This matter is being referred to Technology Center AU 2851 for processing of the request for continued examination under 37 CFR 1.114 and for consideration of the concurrently filed IDS.

Wan Laymon
Petitions Examiner
Office of Petitions

[1] The request to apply the issue fee to the new Notice may be satisfied by completing and returning the new Issue Fee Transmittal Form PTOL-85(b), which includes the following language thereon: "Commissioner for Patents is requested to apply the Issue Fee and Publication Fee (if any) or re-apply any previously paid issue fee to the application identified above." Petitioner is advised that, whether a fee is indicated as being due or not, the Issue Fee Transmittal Form must be completed and timely submitted to avoid abandonment. Note the language in bold text on the first page of the Notice of Allowance and Fee(s) Due (PTOL-85).

UNITED STATES PATENT AND TRADEMARK OFFICE

COMMISSIONER FOR PATENTS
UNITED STATES PATENT AND TRADEMARK OFFICE
P.O. BOX 1450
ALEXANDRIA, VA 22313-1450
www.uspto.gov

SCHERING-PLOUGH CORPORATION
PATENT DEPARTMENT (K-6-1, 1990)
2000 GALLOPING HILL ROAD
KENILWORTH, NJ 07033-0530

COPY MAILED
JUL 17 2006
OFFICE OF PETITIONS

In re Application of :
Grisoni et al. :
Application No. 10/643,172 :
Filed: August 18, 2003 :
Attorney Docket No. FC06092-01 :

This is a decision in response to the petition under 37 CFR 1.137(b), filed February 13, 2006, to revive the above-identified application. The delay in treating this petition is regretted.

This Petition is hereby **granted**.

The above-identified application became abandoned for failure to reply in a timely manner to the non-final Office action, mailed March 8, 2005. The Office action set a three (3) month period for reply, and provided for extensions of time under 37 CFR 1.136(a). No reply having been received, the application became abandoned on June 9, 2005. The mailing of this Decision precedes the mailing of a Notice of Abandonment.

With the instant petition, Petitioner has satisfied the requirements of a grantable petition under 37 CFR 1.137(b). An Amendment in response to the non-final Office action is filed with the instant petition. Accordingly, the petition is granted.

This application is being forwarded to Technology Center Art Unit 3728 for processing of the Amendment in due course.

Telephone inquiries concerning this matter should be directed to the undersigned at (571) 272-3232.

Derek L. Woods
Attorney
Office of Petitions

UNITED STATES PATENT AND TRADEMARK OFFICE

Commissioner for Patents
United States Patent and Trademark Office
P.O. Box 1450
Alexandria, VA 22313-1450
www.uspto.gov

Frank Chau, Esq.
F. CHAU & ASSOCIATES, LLP
1900 Hempstead Turnpike
East Meadow NY 11554

COPY MAILED

MAY 14 2004

OFFICE OF PETITIONS

In re Application of :
Millman et al. :
Application No. 10/643,175 : DECISION GRANTING PETITION
Filed: August 18, 2003 :
Attorney Docket No. YOR920030322US1:

This is a decision on the petition under 37 CFR 1.53(e), filed January 9, 2004, requesting that the above-identified application be accorded a filing date of August 18, 2003.

On August 18, 2003, applicants deposited the above-identified application. On November 12, 2003, the Office of Initial Patent Examination mailed a "Notice of Incomplete Nonprovisional Application," stating that the application had not been accorded a filing date as the application was deposited without drawings and that the filing date would be the date of receipt of the items.

In response, on January 9, 2004, applicants filed the present petition and a copy of applicants' postcard receipt acknowledging receipt of 2 sheets of informal drawings on August 18, 2003. Additionally, applicants submitted a copy of the 2 sheets of drawings, consisting of Figures 1-2.

Upon review of the record, the 2 sheets of drawings deposited on August 18, 2003, have not been located among the application papers. However, the evidence is convincing that the application papers deposited on August 18, 2003, included 2 drawing sheets, which were subsequently misplaced in the United States Patent and Trademark Office. Therefore, the application, including 2 drawing sheets, was complete on filing and will be granted a filing date of August 18, 2003.

Accordingly, the petition is granted.

The drawings requirement set forth in the "Notice of Incomplete Nonprovisional Application," mailed November 12, 2003, was sent in error and is hereby vacated. Accordingly, the $130.00 petition fee is unnecessary and will not be charged.

The Office of Initial Patent Examination is directed to correct the filing date of the above-identified application to August 18, 2003, using Figures 1-2 submitted with the present petition, and to mail a corrected filing receipt reflecting the change. The Office records should indicate that 2sheets of drawings were submitted on filing.

Any inquiries related to this decision should be directed to the undersigned at (703) 306-5589.

Christina Tartera Donnell

Christina Tartera Donnell
Senior Petitions Attorney
Office of Petitions

UNITED STATES PATENT AND TRADEMARK OFFICE

Commissioner for Patents
United States Patent and Trademark Office
P.O. Box 1450
Alexandria, VA 22313-1450
www.uspto.gov

TEXAS INSTRUMENTS INCORPORATED
P O BOX 655474, M/S 3999
DALLAS, TX 75265

COPY MAILED

FEB 04 2008

OFFICE OF PETITIONS

In re Application of :
Gregory C. COPELAND :
Application No. 10/643,179 : DECISION ON PETITION
Filed: August 18, 2003 :
Attorney Docket No. TI-35129 :

This is a decision on the petition under the unintentional provisions of 37 CFR 1.137(b), filed September 28, 2007, to revive the above-identified application.

The petition is **GRANTED**.

The application became abandoned for failure to reply in a timely manner to the non-final Office action mailed, October 31, 2006, which set a shortened statutory period for reply of three (3) months. No extensions of time under the provisions of 37 CFR 1.136(a) were obtained. Accordingly, the application became abandoned on February 01, 2007.

The petition satisfies the conditions for revival pursuant to the provisions of 37 CFR 1.137(b) in that (1) the reply in the form of an amendment; (2) the petition fee of $1,500.00; and (3) the required statement of unintentional delay have been received. Accordingly, the reply to the non-final Office action of October 31, 2006 is accepted as having been unintentionally delayed.

Telephone inquiries concerning this decision should be directed to the undersigned at (571) 272-4231.

The application file is being referred to Technology Center AU 2611 for appropriate action on the concurrently filed amendment.

Michelle R. Eason
Paralegal Specialist
Office of Petitions

UNITED STATES PATENT AND TRADEMARK OFFICE

Commissioner for Patents
United States Patent and Trademark Office
P.O. Box 1450
Alexandria, VA 22313-1450
www.uspto.gov

Myers Bigel Sibley & Sajovec
PO Box 37428
Raleigh, NC 27627

COPY MAILED

DEC 0 9 2003

OFFICE OF PETITIONS

In re Application of :
Proebsting, et al. :
Application No. 10/643,208 :
Filed: August 18, 2003 :
Attorney Docket No. 5646-81 :

DECISION ON PETITION

This is a decision on the petition under 37 CFR 1.10, filed November 24, 2003, requesting that the above-identified application be accorded a filing date of August 18, 2003, rather than the presently accorded filing date of August 19, 2003.

Petitioner alleges that the application was deposited in Express Mail service on August 18, 2003. In support of the allegation, the petition is accompanied by a copy of Express Mail label No. EV318419992US. Although the date-in is blank, the Express Mail label contains a United States Postal Service (USPS) stamp of August 18, 2003. The same Express Mail label number was placed on the original application papers located in the official file.

In view of the above, the petition is **granted**. No petition fee is necessary.

The Office of Initial Patent Examination is directed to correct the filing date to August 18, 2003, to mail a corrected filing receipt.

Telephone inquiries should be directed to the undersigned at (703) 306-5589.

Christina Tartera Donnell

Christina Tartera Donnell
Senior Petitions Attorney
Office of Petitions

UNITED STATES PATENT AND TRADEMARK OFFICE

COMMISSIONER FOR PATENTS
UNITED STATES PATENT AND TRADEMARK OFFICE
P.O. BOX 1450
ALEXANDRIA, VA 22313-1450
www.uspto.gov

Henry M. Feiereisen, LLC
350 Fifth Avenue
Suite 4714
New York, NY 10118

COPY MAILED

DEC 11 2003

OFFICE OF PETITIONS

In re Application of :
Zernickel et al. :
Application No. 10/643,209 : DECISION GRANTING PETITION
Filed: August 15, 2003 :
Attorney Docket No. ZERNICKEL-2 :

This is a decision on the paper entitled "REQUEST TO GRANT A FILING DATE OF AUGUST 15, 2003" filed on October 9, 2003, and supplemented on October 14, 2003, requesting that the above-identified application be accorded a filing date of August 15, 2003, rather than the presently accorded filing date of August 18, 2003, due to an interruption in the postal service. The request is being treated as a petition under 37 CFR 1.181.

The USPTO designated the interruption in the service of the USPS that occurred as a result of the power outage on Thursday, August 14, 2003, in the Northeast and Midwest United States as a postal service interruption and an emergency within the meaning of 35 U.S.C. 21(a) and 37 CFR 1.6(e). On August 15, 2003, a notice was posted on the USPTO website which indicated that correspondence that would have been filed with the USPTO under 37 CFR 1.10 during the USPS service interruption, but which was not filed due to the USPS service interruption, should be promptly filed after the termination of the interruption with a statement that the correspondence would have been deposited with the USPS but for the designated interruption or emergency in "Express Mail" service. Thereafter, on August 19, 2003, a second notice was posted on the USPTO website which indicated that the USPTO had terminated the designation of this interruption in the service of the USPS as postal service interruption and an emergency within the meaning of 35 U.S.C. 21(a) and 37 CFR 1.6(e). This notice stated that correspondence that would have been filed with the USPTO under 37 CFR 1.10 on August 14, 2003, through August 16, 2003, but which was not filed due to the USPS service interruption, should now be filed with the USPTO under 37 CFR 1.10 with a statement that the correspondence would have been deposited with the USPS on August 14, 2003, August 15, 2003, or August 16, 2003, but for the designated interruption in the "Express Mail" service of the USPS. *See United States Postal Service Interruptions and Emergency Terminated,* 1274 *Off. Gaz. Pat. Office* 105 (September 16, 2003). This notice also made it clear that the provisions of 35 U.S.C. 21(a) and 37 CFR

1.6(e) apply only to postal service interruptions and emergencies and not to other exigencies such as the unavailability of a computer or the inaccessibility of an office or building other than a USPS facility.

The transmittal letter that was filed with the application on filing included a statement that "the correspondence would have been deposited with the United States Postal Service on Friday, August 15, 2003 if it were not for the interruption or emergency in 'Express Mail' service as a result of the power outage that affected New York City." However, the application was also accompanied by a paper entitled "COMMUNICATION" which indicated that the Empire State Building was sealed off on August 15, 2003 as a result of the power outage and that, since the offices of applicant's representative were located in the Empire State Building, he was unable to carry out the required submission of the application on August 15, 2003.

Thereafter, on October 9, 2003, the instant petition was filed. Petitioners' attorney, Henry Feiereisen, stated that an Express Mail envelope was prepared on August 14, 2003, for subsequent depositing with the USPS facility located in the Empire State Building and that the Express Mail envelope contained necessary papers for filing an application, including a complete specification, a self-addressed post card and an Information Disclosure Statement. According to petitioners' attorney, the transmittal letter was in the process of being printed out and contained a reference to the application date of August 14, 2003, but before the transmittal letter was printed out, the power outage occurred. Petitioners' attorney stated that the USPS facility located in the Empire State Building was inaccessible after the power outage and remained closed on August 15, 2003. Petitioners' attorney indicated that on Monday, August 18, 2003, the transmittal letter was changed to reflect the date of August 18, 2003. Petitioners' attorney stated that he "made two unsuccessful attempts on August 15, 2003 to reach the USPS (as well as its offices) to deposit the application papers." Petitioners' attorney again stated that "the application papers would have been deposited with the United States Postal Service on Friday August 15, 2003 but for the interruption or emergency in 'Express Mail' service as a result of the power outage that affected New York City."

On October 14, 2003, after a telephone communication between Mr. Feiereisen and the undersigned, a supplement to the petition was filed to clarify the situation. Petitioners' attorney stated that "upon leaving the offices on Thursday, August 14, 2003, he took the prepared Express Mail envelope, containing the papers for filing an application, including the complete specification, a self-addressed post card and an Information Disclosure Statement, except for the transmittal letter, with him, and tried to deposit twice the Express Mail envelope on August 15, 2003" and that both times he "was unsuccessful to reach the USPS to deposit the application papers."

In view of the circumstances, the petition is granted. No petition fee is required.

After the mailing of this decision, the Office of Initial Patent Examination will correct the filing date of the application to **August 15, 2003**, and mail a corrected filing receipt.

Telephone inquiries specific to this matter should be directed to the undersigned at (703) 306-5586.

Eugenia A. Jones

Eugenia A. Jones
Senior Legal Advisor
Office of Patent Legal Administration
Office of the Deputy Commissioner
for Patent Examination Policy

UNITED STATES PATENT AND TRADEMARK OFFICE

UNITED STATES DEPARTMENT OF COMMERCE
United States Patent and Trademark Office
Address: COMMISSIONER FOR PATENTS
P.O. Box 1450
Alexandria, Virginia 22313-1450
www.uspto.gov

APPL NO.	FILING OR 371 (c) DATE	ART UNIT	FIL FEE REC'D	ATTY.DOCKET NO	DRAWINGS	TOT CLMS	IND CLMS
10/643,209	08/15/2003	3682	972	ZERNICKEL-2	2	24	3

CONFIRMATION NO. 4020

CORRECTED FILING RECEIPT

OC000000012029977

020151
HENRY M FEIEREISEN, LLC
350 FIFTH AVENUE
SUITE 4714
NEW YORK, NY 10118

Date Mailed: 03/09/2004

Receipt is acknowledged of this regular Patent Application. It will be considered in its order and you will be notified as to the results of the examination. Be sure to provide the U.S. APPLICATION NUMBER, FILING DATE, NAME OF APPLICANT, and TITLE OF INVENTION when inquiring about this application. Fees transmitted by check or draft are subject to collection. Please verify the accuracy of the data presented on this receipt. **If an error is noted on this Filing Receipt, please write to the Office of Initial Patent Examination's Filing Receipt Corrections, facsimile number 703-746-9195. Please provide a copy of this Filing Receipt with the changes noted thereon. If you received a "Notice to File Missing Parts" for this application, please submit any corrections to this Filing Receipt with your reply to the Notice. When the USPTO processes the reply to the Notice, the USPTO will generate another Filing Receipt incorporating the requested corrections (if appropriate).**

Applicant(s)

Alexander Zernickel, Herzogenaurach, GERMANY;
Horst Doppling, Herzogenaurach, GERMANY;

Assignment For Published Patent Application

INA-SCHAEFFLER KG, Herzogenaurach, GERMANY;

Domestic Priority data as claimed by applicant

This application is a CON of PCT/EP02/00675 01/24/2002

Foreign Applications

GERMANY 101 06 982.0 02/15/2001

If Required, Foreign Filing License Granted: 11/13/2003

Projected Publication Date: 06/10/2004

Non-Publication Request: No

Early Publication Request: No

Title

Linear guide

Preliminary Class

384

LICENSE FOR FOREIGN FILING UNDER
Title 35, United States Code, Section 184
Title 37, Code of Federal Regulations, 5.11 & 5.15

GRANTED

The applicant has been granted a license under 35 U.S.C. 184, if the phrase "IF REQUIRED, FOREIGN FILING LICENSE GRANTED" followed by a date appears on this form. Such licenses are issued in all applications where the conditions for issuance of a license have been met, regardless of whether or not a license may be required as set forth in 37 CFR 5.15. The scope and limitations of this license are set forth in 37 CFR 5.15(a) unless an earlier license has been issued under 37 CFR 5.15(b). The license is subject to revocation upon written notification. The date indicated is the effective date of the license, unless an earlier license of similar scope has been granted under 37 CFR 5.13 or 5.14.

This license is to be retained by the licensee and may be used at any time on or after the effective date thereof unless it is revoked. This license is automatically transferred to any related applications(s) filed under 37 CFR 1.53(d). This license is not retroactive.

The grant of a license does not in any way lessen the responsibility of a licensee for the security of the subject matter as imposed by any Government contract or the provisions of existing laws relating to espionage and the national security or the export of technical data. Licensees should apprise themselves of current regulations especially with respect to certain countries, of other agencies, particularly the Office of Defense Trade Controls, Department of State (with respect to Arms, Munitions and Implements of War (22 CFR 121-128)); the Office of Export Administration, Department of Commerce (15 CFR 370.10 (j)); the Office of Foreign Assets Control, Department of Treasury (31 CFR Parts 500+) and the Department of Energy.

NOT GRANTED

No license under 35 U.S.C. 184 has been granted at this time, if the phrase "IF REQUIRED, FOREIGN FILING LICENSE GRANTED" DOES NOT appear on this form. Applicant may still petition for a license under 37 CFR 5.12, if a license is desired before the expiration of 6 months from the filing date of the application. If 6 months has lapsed from the filing date of this application and the licensee has not received any indication of a secrecy order under 35 U.S.C. 181, the licensee may foreign file the application pursuant to 37 CFR 5.15(b).

UNITED STATES PATENT AND TRADEMARK OFFICE

Commissioner for Patents
United States Patent and Trademark Office
P. O. Box 1450
Alexandria, VA 22313-1450
www. uspto. gov

PEARNE & GORDON LLP
1801 EAST 9TH STREET
SUITE 1200
CLEVELAND, OH 44114-3108

COPY MAILED

OCT 2 7 2005

OFFICE OF PETITIONS

In re Application of :
Masanori Konishi :
Application No. 10/643,218 : ON PETITION
Filed: August 18, 2003 :
Attorney Docket No. 33476US2

This is a decision on the petition, filed October 27, 2005 under 37 CFR 1.313(c)(2) to withdraw the above-identified application from issue after payment of the issue fee.

The petition is **GRANTED**.

The above-identified application is withdrawn from issue for consideration of a submission under 37 CFR 1.114 (request for continued examination). See 37 CFR 1.313(c)(2).

Petitioner is advised that the issue fee paid on August 10, 2005 in the above-identified application cannot be refunded. If, however, the above-identified application is again allowed, petitioner may request that it be applied towards the issue fee required by the new Notice of Allowance.[1]

Telephone inquiries should be directed to Irvin Dingle at (571) 272-3210.

This matter is being referred to Technology Center AU 3742 for processing of the request for continued examination under 37 CFR 1.114 and for consideration of the concurrently filed Information Disclosure Statement.

Irvin Dingle
Petitions Examiner
Office of Petitions

[1] The request to apply the issue fee to the new Notice may be satisfied by completing and returning the new Issue Fee Transmittal Form PTOL-85(b), which includes the following language thereon: Commissioner for Patents is requested to apply the Issue Fee and Publication Fee (if any) or re-apply any previously paid issue fee to the application identified above. Petitioner is advised that, whether a fee is indicated as being due or not, the Issue Fee Transmittal Form **must** be completed and timely submitted to avoid abandonment. Note the language in bold text on the first page of the Notice of Allowance and Fee(s) Due (PTOL-85).

UNITED STATES PATENT AND TRADEMARK OFFICE

Commissioner for Patents
United States Patent and Trademark Office
P.O. Box 1450
Alexandria, VA 22313-1450
www.uspto.gov

BIRCH STEWART KOLASCH & BIRCH
PO BOX 747
FALLS CHURCH VA 22040-0747

COPY MAILED

JAN 15 2009

OFFICE OF PETITIONS

In re Application of :
Yasuhiro **YOSHIOKA, et al.** :
Application No. 10/643,221 : DECISION GRANTING PETITION
Filed: August 19, 2003 : UNDER 37 CFR 1.313(c)(2)
Attorney Docket No. **2870-0264P** :

This is a decision on the petition under 37 CFR 1.313(c)(2), filed January 13, 2009, to withdraw the above-identified application from issue after payment of the issue fee.

The petition is **GRANTED**.

The above-identified application is withdrawn from issue for consideration of a submission under 37 CFR 1.114 (request for continued examination). *See* 37 CFR 1.313(c)(2).

Petitioner is advised that the issue fee paid on December 31, 2008 cannot be refunded. If, however, this application is again allowed, petitioner may request that it be applied towards the issue fee required by the new Notice of Allowance.[1]

Telephone inquiries should be directed to the undersigned at (571) 272-7253.

This application is being referred to Technology Center AU 1795 for processing of the request for continued examination under 37 CFR 1.114 and for consideration of the concurrently filed information disclosure statement.

/Monica A. Graves/
Petitions Examiner, Office of Petitions

---

[1] *The request to apply the issue fee to the new Notice may be satisfied by completing and returning the new Part B – Fee(s) Transmittal Form (along with any balance due at the time of submission). Petitioner is advised that the Issue Fee Transmittal Form must be completed and timely submitted to avoid abandonment of the application.*

UNITED STATES PATENT AND TRADEMARK OFFICE

UNITED STATES DEPARTMENT OF COMMERCE
United States Patent and Trademark Office
Address: COMMISSIONER FOR PATENTS
P.O. Box 1450
Alexandria, Virginia 22313-1450
www.uspto.gov

BROOKS, CAMERON & HUEBSCH, PLLC
1221 NICOLLET AVENUE
SUITE 500
MINNEAPOLIS, MN 55403

Mail Date: 04/21/2010

Applicant	: Ilya Yampolsky	: DECISION ON REQUEST FOR
Patent Number	: 7628806	: RECALCULATION of PATENT
Issue Date	: 12/08/2009	: TERM ADJUSTMENT IN VIEW
Appliction No	: 10/643,261	: OF WYETH AND NOTICE OF INTENT TO
Filed	: 08/20/2003	: ISSUE CERTIFICATE OF CORRECTION
		:

The Request for Recalculation is **GRANTED** to the extent indicated.

The patent term adjustment has been determined to be **928** days. The USPTO will *sua sponte* issue a certificate of correction reflecting the amount of PTA days determined by the recalculation.

Prior to the issuance of the certificate of correction, the USPTO will afford patentee an opportunity to be heard and request reconsideration. Accordingly, patentee has **one month or thirty (30) days**, whichever is longer, to file a request for reconsideration of this patent term adjustment calculation. See 35 U.S.C. 154(b)(3)(B)(ii) and 37 CFR 1.322(a)(4). No extensions of time will be granted under 37 CFR 1.136.

Patentee should use document code PET.OP if electronically filing a request for reconsideration of this patent term adjustment calculation. The patentee must also include the information required by 37 CFR 1.705(b)(2) and the fee required by 37 CFR 1.18(e). If patentee does not file a timely request for reconsideration of this patent term adjustment calculation including the information required by 37 CFR 1.705(b)(2) and the fee required by 37 CFR 1.18(e), the USPTO will issue a certificate of correction reflecting the PTA determination noted above.

Patentee should be aware that in order to preserve the right to review in the United States District Court for the District of Columbia of the USPTO patent term adjustment determination, patentee must ensure that he or she also take the steps required under 35 U.S.C. 154(b)(4)(A) in a timely manner. Nothing in the request for recalculation should be construed as providing an alternative time frame for commencing a civil action under 35 U.S.C. 154(b)(4)(A).

Any questions concerning this decision should be directed to the Office of Patent Legal Administration at 571-272-7702.

UNITED STATES PATENT AND TRADEMARK OFFICE

Commissioner for Patents
United States Patent and Trademark Office
P.O. Box 1450
Alexandria, VA 22313-1450
www.uspto.gov

Paper No.

FISH & RICHARDSON P.C.
P.O. Box 1022
MINNEAPOLIS MN 55440-1022

MAILED

JUL 20 2010

OFFICE OF PETITIONS

In re Application of :
Schuster : DECISION ON APPLICATION
Application No: 10/643,279
: FOR
Filed: October 18, 2003 : PATENT TERM ADJUSTMENT
Atty Docket No.
07844-0569001/P534 :

This is a decision on the "REQUEST FOR RECONSIDERATION OF PATENT TERM ADJUSTMENT UNDER UNDER 37 CFR 1.705(d)," filed November 24, 2008. Applicants request that the patent term adjustment of eight hundred sixty seven (867) days be adjusted to a determination of one thousand two hundred seventy one(1271) days.

The request for reconsideration of patent term adjustment is **GRANTED-IN-PART**.

On October 7, 2008, the above-identified application matured into US. Patent No. 7,433,540 with a patent term adjustment of 867 days. This request for reconsideration of patent term adjustment was timely filed within two months of the issue date of the patent. See 37 CFR 1.705(d).

The Office acknowledges submission of the $200.00 fee set forth in 37 CFR 1.18(e), paid on November 24, 2008. No additional fees are required.

Patentees request recalculation of the patent term adjustment based on the decision in Wyeth v. Dudas, 580 F. Supp. 2d 138, 88 U.S.P.Q. 2d 1538 (D.D.C. 2008). Patentees assert that in view of the decision in Wyeth, they are entitled to a total patent term adjustment of 1271 days, which includes 404 days due to exceeding three year pendency.

In view of the Federal Circuit decision Wyeth v. Kappos, No. 2009-1120 (Fed. Cir., Jan. 7, 2010), patentees request is granted-in-part. In the instant situation, patentees do not dispute the "A" period delay of 899 days, nor do they dispute the 32 day patentee delay. Also not in dispute is the 230 day overlap of the "A" and "B" periods.

Patentees err in the "B" period calculation by one day. In that, the period is calculated from the day after the 36 months, i.e. from August 19, 2006 until one day before the filing of an RCE or the issue date. In this case the RCE was filed on May 13, 2008, hence the "B" period extends from August 19, 2006 to May 12, 2008 for a total of 633 days. Thus, the PTA term is the total "A" delay of 899 days, plus the total "B" delay of 633 days, minus the overlap of 230 days, minus the applicant delay of 32 days for a total PTA of 1270 days. As a result the request of a total PTA of 1271 is **granted-in-part for a total of 1270 days.**

Since the Office is sua sponte granting patentee a certificate of correction, patentee has an opportunity to be heard. Patentee is given on month or thirty days whichever is longer to file a response if deemed necessary. This decision does not adjust the statutory time period for patentee to commence a civil action pursuant to 35 CFR 154.

Telephone inquiries specific to this decision should be directed to Maria Nuzzolillo, Legal Advisor, at (571) 272-8150, or the undersigned at 571-272-7757.

/Kery A. Fries/

Kery A. Fries
Senior Legal Advisor
Office of Patent Legal Administration
Office of Associate Commissioner
for Examination Policy

cc: Adjusted PTA calculation
Draft of C of C

Day : Monday
Date: 7/19/2010

PALM INTRANET

Time: 11:02:32

PTA Calculations for Application: 10/643279			
Application Filing Date:	08/18/2003	PTO Delay (PTO):	899
Issue Date of Patent:	10/07/2008	Three Years:	0
Pre-Issue Petitions:	0	Applicant Delay (APPL):	32
Post-Issue Petitions:	0	Total PTA (days):	1270
PTO Delay Adjustment:	403		

File Contents History

Number	Date	Contents Description	PTO	APPL	START
81	07/19/2010	ADJUSTMENT OF PTA CALCULATION BY PTO	403		
75.5	09/17/2008	PTA 36 MONTHS			
75	10/07/2008	PATENT ISSUE DATE USED IN PTA CALCULATION			
74	08/29/2008	EXPORT TO FINAL DATA CAPTURE			
73	08/28/2008	DISPATCH TO FDC			
72	08/28/2008	APPLICATION IS CONSIDERED READY FOR ISSUE			
71	08/27/2008	ISSUE FEE PAYMENT VERIFIED			
70	08/27/2008	ISSUE FEE PAYMENT RECEIVED			
69	05/30/2008	EXPORT TO INITIAL DATA CAPTURE			
67	05/27/2008	MAIL NOTICE OF ALLOWANCE			
66	05/23/2008	ISSUE REVISION COMPLETED			
65	05/23/2008	DOCUMENT VERIFICATION			
64	05/23/2008	NOTICE OF ALLOWANCE DATA VERIFICATION COMPLETED			
63	05/23/2008	EXAMINER'S AMENDMENT COMMUNICATION			
62	05/22/2008	EXAMINER INTERVIEW SUMMARY RECORD (PTOL - 413)			
61	05/23/2008	NOTICE OF ALLOWABILITY			
60	05/13/2008	MISCELLANEOUS INCOMING LETTER			
59	05/13/2008	INFORMATION DISCLOSURE STATEMENT (IDS) FILED			
58	05/23/2008	DATE FORWARDED TO EXAMINER			
57	05/13/2008	REQUEST FOR CONTINUED EXAMINATION (RCE)			
56	05/23/2008	DISPOSAL FOR A RCE / CPA / R129			
		INFORMATION DISCLOSURE STATEMENT			

55	05/13/2008	CONSIDERED			
54	05/13/2008	INFORMATION DISCLOSURE STATEMENT (IDS) FILED			
47	05/13/2008	INFORMATION DISCLOSURE STATEMENT (IDS) FILED			
46	05/13/2008	WORKFLOW - REQUEST FOR RCE - BEGIN			
45	03/17/2008	FINISHED INITIAL DATA CAPTURE			
44	03/03/2008	RECEIPT INTO PUBS			
43	02/18/2008	EXPORT TO INITIAL DATA CAPTURE			
42	02/13/2008	MAIL NOTICE OF ALLOWANCE			
41	02/12/2008	ISSUE REVISION COMPLETED			
40	02/12/2008	NOTICE OF ALLOWANCE DATA VERIFICATION COMPLETED			
39	02/11/2008	DOCUMENT VERIFICATION			
38	12/03/2003	CORRECTED FILING RECEIPT			
37	02/04/2008	NOTICE OF ALLOWABILITY			
33	01/30/2008	DATE FORWARDED TO EXAMINER			
32	01/16/2008	AMENDMENT AFTER FINAL REJECTION			
31	01/23/2008	REQUEST FOR EXTENSION OF TIME - GRANTED			
30	10/17/2007	CASE DOCKETED TO EXAMINER IN GAU			
29	10/16/2007	MAIL FINAL REJECTION (PTOL - 326)			
28	10/15/2007	FINAL REJECTION			
27	08/06/2007	CORRECTED FILING RECEIPT			
26	08/07/2007	DATE FORWARDED TO EXAMINER			
25	08/06/2007	RESPONSE AFTER NON-FINAL ACTION		32	23
24	08/06/2007	REQUEST FOR EXTENSION OF TIME - GRANTED			
23	04/05/2007	MAIL NON-FINAL REJECTION	899		-1
22	04/02/2007	NON-FINAL REJECTION			
21	11/28/2003	INFORMATION DISCLOSURE STATEMENT CONSIDERED			
20	03/19/2007	CASE DOCKETED TO EXAMINER IN GAU			
19	01/04/2007	CASE DOCKETED TO EXAMINER IN GAU			
18	03/21/2006	CASE DOCKETED TO EXAMINER IN GAU			
17	02/14/2006	CASE DOCKETED TO EXAMINER IN GAU			
16	07/09/2004	INCOMING LETTER PERTAINING TO THE DRAWINGS			
15	05/14/2004	IFW TSS PROCESSING BY TECH CENTER COMPLETE			
14	05/14/2004	CASE DOCKETED TO EXAMINER IN GAU			

13	02/27/2004	IFW TSS PROCESSING BY TECH CENTER COMPLETE			
12	02/27/2004	REFERENCE CAPTURE ON IDS			
11	01/22/2004	MISCELLANEOUS INCOMING LETTER			
10.7	11/28/2003	INFORMATION DISCLOSURE STATEMENT (IDS) FILED			
10	11/28/2003	INFORMATION DISCLOSURE STATEMENT (IDS) FILED			
9	11/12/2003	APPLICATION RETURN FROM OIPE			
8	11/12/2003	APPLICATION RETURN TO OIPE			
7	11/12/2003	APPLICATION DISPATCHED FROM OIPE			
6	11/13/2003	APPLICATION IS NOW COMPLETE			
5	08/18/2003	PGPUBS NONPUB REQUEST			
4	11/03/2003	CASE CLASSIFIED BY OIPE			
3	11/03/2003	CLEARED BY OIPE CSR			
2	09/22/2003	IFW SCAN & PACR AUTO SECURITY REVIEW			
1	08/18/2003	INITIAL EXAM TEAM NN			

Search Another: Application# Search

EXPLANATION OF PTA CALCULATION

EXPLANATION OF PTE CALCULATION

To go back, right click here and select Back. To go forward, right click here and select Forward. To refresh, right click here and select Refresh.

Back to OASIS | Home page

UNITED STATES PATENT AND TRADEMARK OFFICE

CERTIFICATE OF CORRECTION

PATENT	:	7,443,540 B2
DATED	:	October 7, 2008
INVENTOR(S)	:	Schuster et al.

It is certified that error appears in the above-identified patent and that said Letters Patent is hereby corrected as shown below:

On the cover page,

[*] Notice: Subject to any disclaimer, the term of this patent is extended or adjusted under 35 USC 154(b) by 867 days

Delete the phrase "by 867 days" and insert – by 1270 days--

UNITED STATES PATENT AND TRADEMARK OFFICE

Commissioner for Patents
United States Patent and Trademark Office
P.O. Box 1450
Alexandria, VA 22313-1450
www.uspto.gov

GOTTLIEB RACKMAN & REISMAN PC
270 MADISON AVENUE
8TH FLOOR
NEW YORK NY 10016-0601

COPY MAILED

JUN 1 6 2004

OFFICE OF PETITIONS

In re Application of :
Hou Chong Lei :
Application No. 10/643,287 : ON PETITION
Filed: August 18, 2003 :
Atty's Docket No. 211/240 :

This is a decision in response to the "Response to Notice to File Missing Parts", filed January 16, 2004, and which is treated as petition under 37 CFR 1.82.

The petition is **DISMISSED** as involving moot issues.

The application was filed August 18, 2003. However, on December 13, 2003. the Office of Initial Patent Examination mailed a Notice To File Missing Parts noting that, amongst other things, the application had been accorded a filing date of August 18, 2003, but that Figures 8-9 described in the specification appeared to have been omitted.

The mailing of a "Notice of Omitted Items" permits the applicant to either: (1) promptly establish prior receipt in the PTO of the drawing(s) at issue (generally by way of a date-stamped postcard receipt (MPEP 503)), or (2) promptly submit the omitted drawing(s) in a nonprovisional application and accept the date of such submission as the application filing date. An applicant asserting that the missing drawings were in fact deposited in the PTO with the application papers must file a petition (and the appropriate petition fee) with evidence of such deposit. An applicant desiring to submit the omitted drawings in a nonprovisional application and accept the date of such submission as the application filing date must file any omitted drawing(s) with an oath or declaration in compliance with 37 CFR 1.63 and 1.64 referring to such drawing(s) and a petition under 37 CFR 1.182 (with the petition fee under 37 CFR 1.17(h)) requesting the later filing date within two months of the date of the "Notice of Omitted Items" (37 CFR 1.181(f)).

Finally, the third option is in the absence of electing options 1) or 2) above, to constructively opt to accept the filing date which has been accorded with the papers filed upon application. With option 3), no petition under 37 CFR 1.182 is necessary for that purpose.

In this case, petitioners neither assert nor concede that the missing figures were deposited on August 18, 2003. Rather, petitioners responded in a timely manner that they will take no action at this time.

With this, Figures 8-9 may be entered by the primary examiner without petition so long as the new drawings contain no new matter. See MPEP § 608.02(a). If Figures 8-9 are submitted as a preliminary amendment, it will be reviewed by the examiner for new matter.[1]

Thus, the application will continue to be processed and examined using only the application papers filed on August 18, 2003 and no action is being taken with respect to this petition.

The application is being returned to the Office of Initial Patent Examination for further processing with a filing date of August 18, 2003, using the application papers filed on that date.

Telephone inquiries concerning this matter may be directed to the undersigned Petitions Attorney at (703)305-4497.

Patricia Faison-Ball

Patricia Faison-Ball
Senior Petitions Attorney
Office of Petitions

[1] 37 CFR 1.121(b).

UNITED STATES PATENT AND TRADEMARK OFFICE

COMMISSIONER FOR PATENTS
UNITED STATES PATENT AND TRADEMARK OFFICE
P.O. BOX 1450
ALEXANDRIA, VA 22313-1450
www.uspto.gov

KATTEN MUCHIN ROSENMAN, LLP
575 MADISON AVENUE
NEW YORK, NY 10022-2585

COPY MAILED

AUG 15 2006

OFFICE OF PETITIONS

In re Application of :
Harvey A. Furman, et. al. :
Application No. 10/643,289 : DECISION ON PETITION
Filed: August 19, 2003 : UNDER 37 CFR 1.78(a)(3)
Attorney Docket No. 335970-00001 :

This is a decision on the petition under 37 CFR 1.78(a)(3), filed by facsimile transmission on May 26, 2006, to accept an unintentionally delayed claim under 35 U.S.C. § 120 for the benefit of priority to the prior-filed nonprovisional applications set forth in the amendment filed with the petition.

The petition is **DISMISSED**.

A petition for acceptance of a claim for late priority under 37 CFR 1.78(a)(3) is only applicable to those applications filed on or after November 29, 2000. Further, the petition is appropriate only after the expiration of the period specified in 37 CFR 1.78(a)(2)(ii). In addition, the petition under 37 CFR 1.78(a)(3) must be accompanied by:

(1) the reference required by 35 U.S.C. § 120 and 37 CFR 1.78(a)(2)(i) of the prior-filed application, unless previously submitted;
(2) the surcharge set forth in § 1.17(t); and
(3) a statement that the entire delay between the date the claim was due under 37 CFR 1.78(a)(2)(ii) and the date the claim was filed was unintentional. The Director may require additional information where there is a question whether the delay was unintentional.

The petition does not satisfy item (1) above.

The reference to add the above-noted, prior-filed applications on page one following the first sentence of the specification is not acceptable as drafted since it improperly incorporates by reference the prior-filed applications. An incorporation by reference statement added after an application's filing date is not effective because no new

matter can be added to an application after its filing date (*see* 35 U.S.C. § 132(a)). If an incorporation by reference statement is included in an amendment to the specification to add a benefit claim under 35 U.S.C. § 120 after the filing date of the application, the amendment would not be proper. When a benefit claim under 35 U.S.C. § 120 is submitted after the filing of an application, the reference to the prior application cannot include an incorporation by reference statement of the prior application. *See* Dart Industries v. Banner, 636 F.2d 684, 207 USPQ 273 (C.A.D.C. 1980). *Note* MPEP §§ 201.06(c) and 608.04(b).

Before the petition under 37 CFR § 1.78(a)(3) can be granted, a renewed petition and either an Application Data Sheet or a substitute amendment (complying with the provisions of 37 CFR 1.121 and 37 CFR 1.76(b)(5)) to correct the above matters are required.

Further correspondence with respect to this matter should be addressed as follows:

By mail: Mail Stop PETITIONS
Commissioner for Patents
Post Office Box 1450
Alexandria, VA 22313-1450

By hand: Customer Service Window
Mail Stop Petitions
Randolph Building
401 Dulany Street
Alexandria, VA 22314

By fax: (571) 273-8300
ATTN: Office of Petitions

Any questions concerning this matter may be directed to Andrea Smith at (571) 272-3226.

Frances Hicks
Petitions Examiner
Office of Petitions

UNITED STATES PATENT AND TRADEMARK OFFICE

COMMISSIONER FOR PATENTS
UNITED STATES PATENT AND TRADEMARK OFFICE
P.O. BOX 1450
ALEXANDRIA, VA 22313-1450
WWW.USPTO.GOV

Paper No. None

KATTEN MUCHIN ROSENMAN LLP
575 MADISON AVENUE
NEW YORK NY 10022-2585

COPY MAILED

MAR 1 3 2007

OFFICE OF PETITIONS

In re Application of :
Harvery A. Furman et al. :
Application No. 10/643,289 : DECISION ON RENEWED PETITION
Filing Date: August 19, 2003 : UNDER 37 C.F.R. §1.78(A)(3)
Attorney Docket No. 335970-00001 :
Title: CLEANING COMPOSITIONS FOR OIL AND GAS WELLS, LINES, CASINGS, FORMATIONS AND EQUIPMENT AND METHODS OF USE :

This is a decision on the renewed petition under 37 C.F.R. §1.78(a)(3), filed August 24, 2006, to accept an unintentionally delayed claim under 35 U.S.C. §120 for the benefit of priority to the prior-filed nonprovisional application set forth in the amendment filed concurrently with the present petition.

The Office regrets the period of delay in issuing this decision.

The renewed petition is **GRANTED**.

The original petition was filed on May 26, 2006 and was dismissed via the mailing of a decision on August 15, 2006.

A petition for acceptance of a claim for late priority under 37 C.F.R. 1.78(a)(3) is only applicable to those applications filed on or after November 29, 2000. Further, the petition is appropriate only after the expiration of the period specified in 37 C.F.R. 1.78(a)(2)(ii). In addition, the petition under 37 C.F.R. 1.78(a)(3) must be accompanied by:

(1) the reference required by 35 U.S.C. § 120 and 37 C.F.R. 1.78(a)(2)(i) of the prior-filed application, unless previously submitted;
(2) the surcharge set forth in § 1.17(t); and
(3) a statement that the entire delay between the date the claim was due under 37 C.F.R. 1.78(a)(2)(ii) and the date the claim was filed was unintentional. The Director may require additional information where there is a question whether the delay was unintentional.

The original petition complied with items (2) and (3) above, but failed to contain an acceptable reference as it contained an improper incorporation-by-reference statement.

A reference to the prior-filed nonprovisional application has been included in an amendment to the first sentence of the specification following the title, as required by 37 C.F.R. §1.78(a)(2)(iii). However, a final Office action was mailed in this application on August 24, 2006. On February 23, 2007, applicant submitted a Request for Continued Examination (RCE)(with fee and submission), made timely by an accompanying petition for extension of time.

All of the above requirements having been satisfied, the late claim for priority under 35 U.S.C. § 120 is accepted as being unintentionally delayed.

A corrected Filing Receipt, which includes the priority claim to the prior-filed nonprovisional application, has been included with this decision.

The granting of the petition to accept the delayed benefit claim to the prior-filed application under 37 C.F.R. §1.78(a)(3) should not be construed as meaning that this application is entitled to the benefit of the prior-filed application. In order for this application to be entitled to the benefit of the prior-filed application, all other requirements under 35 U.S.C. §120 and 37 C.F.R. §1.78(a)(1) and (a)(2) must be met. Similarly, the fact that the corrected Filing Receipt which was mailed on January 29, 2004 includes the prior-filed application should not be construed as meaning that applicant is entitled to the claim for benefit of priority to the prior-filed application noted thereon. Accordingly, the examiner will, in due course, consider this benefit claim and determine whether the application is entitled to the benefit of the earlier filing date.

Telephone inquiries regarding *this decision* should be directed to Paul Shanoski at (571) 272-3225[1]. All other inquiries concerning examination procedures or status of the application should be directed to the Technology Center.

Technology Center Art Unit 1712 will be made aware of this decision so that the examiner may consider applicant's entitlement to claim benefit of priority under 35 U.S.C. § 120 to the prior-filed applications.

Ira Lazarus
Supervisory Petitions Examiner
Office of Petitions
United States Patent and Trademark Office

Encl. Corrected Filing Receipt

1 Petitioner will note that all practice before the Office should be in writing, and the action of the Office will be based exclusively on the written record in the Office. See 37 C.F.R. §1.2. As such, Petitioner is reminded that no telephone discussion may be controlling or considered authority for any further action(s) of Petitioner.

UNITED STATES PATENT AND TRADEMARK OFFICE

UNITED STATES DEPARTMENT OF COMMERCE
United States Patent and Trademark Office
Address: COMMISSIONER FOR PATENTS
P.O. Box 1450
Alexandria, Virginia 22313-1450
www.uspto.gov

APPL NO.	FILING OR 371 (c) DATE	ART UNIT	FIL FEE REC'D	ATTY.DOCKET NO	DRAWINGS	TOT CLMS	IND CLMS
10/643,289	08/19/2003	1712	750	335970-00001	18	13	1

CONFIRMATION NO. 4033

26304
KATTEN MUCHIN ROSENMAN LLP
575 MADISON AVENUE
NEW YORK, NY 10022-2585

CORRECTED FILING RECEIPT

OC000000022732718

Date Mailed: 03/02/2007

Receipt is acknowledged of this regular Patent Application. It will be considered in its order and you will be notified as to the results of the examination. Be sure to provide the U.S. APPLICATION NUMBER, FILING DATE, NAME OF APPLICANT, and TITLE OF INVENTION when inquiring about this application. Fees transmitted by check or draft are subject to collection. Please verify the accuracy of the data presented on this receipt. **If an error is noted on this Filing Receipt, please mail to the Commissioner for Patents P.O. Box 1450 Alexandria Va 22313-1450. Please provide a copy of this Filing Receipt with the changes noted thereon. If you received a "Notice to File Missing Parts" for this application, please submit any corrections to this Filing Receipt with your reply to the Notice. When the USPTO processes the reply to the Notice, the USPTO will generate another Filing Receipt incorporating the requested corrections (if appropriate).**

Applicant(s)

Harvey A. Furman, Old Bridge, NJ;
Kenneth R. Cioletti, Passaic, NJ;

Power of Attorney: The patent practitioners associated with Customer Number **026304**.

Domestic Priority data as claimed by applicant

This application is a DIV of 09/671,701 09/28/2000 PAT 6,630,428
which is a DIV of 09/051,167 12/24/1998 PAT 6,173,776
which is a 371 of PCT/US96/15840 10/03/1996
which is a CIP of 08/538,262 10/03/1995 ABN

Foreign Applications

If Required, Foreign Filing License Granted: 01/28/2004

The country code and number of your priority application, to be used for filing abroad under the Paris Convention, is US10/643,289

Projected Publication Date: Not Applicable

Non-Publication Request: No

Early Publication Request: No

Title

Cleaning compositions for oil and gas wells, lines, casings, formations and equipment and methods of use

Preliminary Class

507

PROTECTING YOUR INVENTION OUTSIDE THE UNITED STATES

Since the rights granted by a U.S. patent extend only throughout the territory of the United States and have no effect in a foreign country, an inventor who wishes patent protection in another country must apply for a patent in a specific country or in regional patent offices. Applicants may wish to consider the filing of an international application under the Patent Cooperation Treaty (PCT). An international (PCT) application generally has the same effect as a regular national patent application in each PCT-member country. The PCT process **simplifies** the filing of patent applications on the same invention in member countries, but **does not result** in a grant of "an international patent" and does not eliminate the need of applicants to file additional documents and fees in countries where patent protection is desired.

Almost every country has its own patent law, and a person desiring a patent in a particular country must make an application for patent in that country in accordance with its particular laws. Since the laws of many countries differ in various respects from the patent law of the United States, applicants are advised to seek guidance from specific foreign countries to ensure that patent rights are not lost prematurely.

Applicants also are advised that in the case of inventions made in the United States, the Director of the USPTO must issue a license before applicants can apply for a patent in a foreign country. The filing of a U.S. patent application serves as a request for a foreign filing license. The application's filing receipt contains further information and guidance as to the status of applicant's license for foreign filing.

Applicants may wish to consult the USPTO booklet, "General Information Concerning Patents" (specifically, the section entitled "Treaties and Foreign Patents") for more information on timeframes and deadlines for filing foreign patent applications. The guide is available either by contacting the USPTO Contact Center at 800-786-9199, or it can be viewed on the USPTO website at http://www.uspto.gov/web/offices/pac/doc/general/index.html.

For information on preventing theft of your intellectual property (patents, trademarks and copyrights), you may wish to consult the U.S. Government website, http://www.stopfakes.gov. Part of a Department of Commerce initiative, this website includes self-help "toolkits" giving innovators guidance on how to protect intellectual property in specific countries such as China, Korea and Mexico. For questions regarding patent enforcement issues, applicants may call the U.S. Government hotline at 1-866-999-HALT (1-866-999-4158).

LICENSE FOR FOREIGN FILING UNDER
Title 35, United States Code, Section 184
Title 37, Code of Federal Regulations, 5.11 & 5.15

GRANTED

The applicant has been granted a license under 35 U.S.C. 184, if the phrase "IF REQUIRED, FOREIGN FILING LICENSE GRANTED" followed by a date appears on this form. Such licenses are issued in all applications where the conditions for issuance of a license have been met, regardless of whether or not a license may be required as set forth in 37 CFR 5.15. The scope and limitations of this license are set forth in 37 CFR 5.15(a) unless an earlier license has been issued under 37 CFR 5.15(b). The license is subject to revocation upon written notification. The date indicated is the effective date of the license, unless an earlier license of similar scope has been granted under 37 CFR 5.13 or 5.14.

This license is to be retained by the licensee and may be used at any time on or after the effective date thereof unless it is revoked. This license is automatically transferred to any related applications(s) filed under 37 CFR 1.53(d). This license is not retroactive.

The grant of a license does not in any way lessen the responsibility of a licensee for the security of the subject matter as imposed by any Government contract or the provisions of existing laws relating to espionage and the national security or the export of technical data. Licensees should apprise themselves of current regulations especially with respect to certain countries, of other agencies, particularly the Office of Defense Trade Controls, Department of State (with respect to Arms, Munitions and Implements of War (22 CFR 121-128)); the Bureau of Industry and Security, Department of Commerce (15 CFR parts 730-774); the Office of Foreign Assets Control, Department of Treasury (31 CFR Parts 500+) and the Department of Energy.

NOT GRANTED

No license under 35 U.S.C. 184 has been granted at this time, if the phrase "IF REQUIRED, FOREIGN FILING LICENSE GRANTED" DOES NOT appear on this form. Applicant may still petition for a license under 37 CFR 5.12, if a license is desired before the expiration of 6 months from the filing date of the application. If 6 months has lapsed from the filing date of this application and the licensee has not received any indication of a secrecy order under 35 U.S.C. 181, the licensee may foreign file the application pursuant to 37 CFR 5.15(b).

UNITED STATES PATENT AND TRADEMARK OFFICE

Commissioner for Patents
United States Patent and Trademark Office
P.O. Box 1450
Alexandria, VA 22313-1450
www.uspto.gov

BLAKELY SOKOLOFF TAYLOR & ZAFMAN
12400 WILSHIRE BOULEVARD, SEVENTH FLOOR
LOS ANGELES, CA 90025

COPY MAILED

MAY 11 2004

OFFICE OF PETITIONS

In re Application of :
Thomas A. Wilkins, Nagwa M. :
Elkachouty, Reigh A. Walling, : DECISION GRANTING PETITION
James P. Lyons, Robert W. : UNDER 37 CFR 1.47(a)
Delmerico, Sumit Bose and :
Nicholas W. Miller
Application No. 10/643,297
Filed: August 18, 2003
Title: CONTINUOUS REACTIVE POWER SUPPORT FOR WIND TURBINE GENERATORS

This is in response to the "Petition Under 37 CFR 1.47(a)," filed March 17, 2004.

The petition is **granted**.

Petitioner has shown that the non-signing inventor has refused to join in the filing of the above-identified application.

The above-identified application and papers have been reviewed and found in compliance with 37 CFR 1.47(a). This application is hereby accorded Rule 1.47(a) status. As provided in Rule 1.47(c), this Office will forward notice of this application's filing to the non-signing inventor at the address given in the Declaration. Notice of the filing of this application will also be published in the Official Gazette.

The file is being forwarded to the Office of Initial Patent Examination for further processing.

Telephone inquiries regarding this decision should be directed to the undersigned at (703) 306-9200.

Edward J. Tannouse
Senior Petitions Attorney
Office of Petitions
United States Patent and Trademark Office

UNITED STATES PATENT AND TRADEMARK OFFICE

Commissioner for Patents
United States Patent and Trademark Office
P.O. Box 1450
Alexandria, VA 22313-1450
www.uspto.gov

COPY MAILED

MAY 11 2004

OFFICE OF PETITIONS

THOMAS A. WILKINS
21341 GOLDEN HILLS BLVD., #D
TEHACHAPI, CA 93561

In re Application of
Thomas A. Wilkins, Nagwa M. Elkachouty, Reigh A. Walling, James P. Lyons, Robert W. Delmerico, Sumit Bose and Nicholas W. Miller
Application No. 10/643,297
Filed: August 18, 2003
For: CONTINUOUS REACTIVE POWER SUPPORT FOR WIND TURBINE GENERATORS

Dear THOMAS A. WILKINS:

You are named as a joint inventor in the above identified United States patent application, filed under the provisions of 35 U.S.C. 116 (United States Code), and 37 CFR 1.47(a), Rules of Practice in Patent Cases. Should a patent be granted on the application you will be designated therein as a joint inventor.

As a named inventor you are entitled to inspect any paper in the file wrapper of the application, order copies of all or any part thereof (at a prepaid cost per 37 CFR 1.19) or make your position of record in the application. Alternatively, you may arrange to do any of the preceding through a registered patent attorney or agent presenting written authorization from you. If you care to join the application, counsel of record (see below) would presumably assist you. Joining in the application would entail the filing of an appropriate oath or declaration by you pursuant to 37 CFR 1.63.

Telephone inquiries regarding this communication should be directed to Petitions Attorney Edward Tannouse at (703) 306-9200. Requests for information regarding your application should be directed to the File Information Unit at (703) 308-2733. Information regarding how to pay for and order a copy of the application, or a specific paper in the application, should be directed to Certification Division at (703) 308-9726 or 1(800) 972-6382 (outside the Washington D.C. area).

Edward J. Tannouse
Petitions Attorney
Office of Petitions
United States Patent and Trademark Office

BLAKELY SOKOLOFF TAYLOR & ZAFMAN
12400 WILSHIRE BOULEVARD, SEVENTH FLOOR
LOS ANGELES, CA 90025

UNITED STATES PATENT AND TRADEMARK OFFICE

COMMISSIONER FOR PATENTS
UNITED STATES PATENT AND TRADEMARK OFFICE
P.O. BOX 1450
ALEXANDRIA, VA 22313-1450
www.uspto.gov

HEWLETT PACKARD CO.
P.O. BOX 272400
INTELLECTUAL PROPERTY ADMINISTRATION
FORT COLLINS, CO 80527-2400

COPY MAILED
AUG 0 4 2008

Applicant: Proudler
Appl. No.: 10/643,306
Filing Date: August 13, 2003
Title: METHOD FOR CONTROLLING THE PROCESSING OF DATA
Attorney Docket: B 202 621167-5
Pub. No.: US 2005/0076209 A1
Pub. Date: April 7, 2005

This is a decision on the request for a corrected patent application publication under 37 CFR 1.221(b), received on August 31, 2007, for the above-identified application.

The request is DISMISSED.

Applicant requests that the application be republished because the patent application publication contains material errors as the wrong parts of the application were published.

37 CFR 1.221 (b) is applicable "only when the Office makes a material mistake which is apparent from Office records.... Any request for a corrected publication or revised patent application publication other than provided as provided in paragraph (a) of this section must be filed within **two months** from the date of the patent application publication. This period is not extendable." A material mistake must affect the public's ability to appreciate the technical disclosure of the patent application publication, to determine the scope of the patent application publication, or to determine the scope of the provisional rights that an applicant may seek to enforce upon issuance of a patent. [1]

The request for corrected publication, received on August 31, 2007, was not timely filed under 37 CFR 1.221(b).

The patent application publication was published with the contents of another application. Due to the nature of the errors in this publication, the office will *sua sponte* publish a corrected patent application publication. The corrected patent application publication will be published in due

[1] Changes to Implement Eighteen-Month Publication of Patent Applications, 65 FR 57023, 57038 (Sept. 20, 2000), 1239, Off. Gaz. Pat. Office Notices 63, 75 (Oct. 10, 2000) (final rule).

course, unless the application is allowed and the patent is issued before the application is republished.

The corrected patent application publication will be published in due course, unless the patent issues before the application is republished.

It would greatly benefit the Office if the request for corrected publication pointed out what was printed incorrectly in the application, where the error occurs in the publication and where the correct text or drawing is found in the application papers. Marked up relevant copies of the applications papers and the pre-grant publication may facilitate processing of the request, where it is not readily apparent where the error occurs. If it is not clear why the error is a material error, further explanation may be warranted.

Inquiries relating to this matter may be directed to Mark Polutta at (571) 272-7709.

Mark Polutta
Senior Legal Advisor
Office of Patent Legal Administration
Office of the Deputy Commissioner
for Patent Examination Policy

UNITED STATES PATENT AND TRADEMARK OFFICE

Commissioner for Patents
United States Patent and Trademark Office
P.O. Box 1450
Alexandria, VA 22313-1450
www.uspto.gov

MAIL

JUN 2 4 2005

DIRECTOR OFFICE
TECHNOLOGY CENTER 2100

TOWNSEND AND TOWNSEND AND CREW, LLP
TWO EMBARCADERO CENTER
EIGHTH FLOOR
SAN FRANCISCO CA 94111-3834

In re Application of: Nakamura, et al.
Application No. 10/643,312
Filed: 18 August 2003
For: DISK CONTROL SYSTEM AND CONTROL METHOD OF DISK CONTROL SYSTEM

DECISION ON PETITION FOR ACCELERATED EXAMINATION UNDER M.P.E.P.§708.02(VIII)

This is a decision on the petition filed 20 May 2005, under 37 C.F.R. 102(d) and M.P.E.P. § 708.02(VIII): Accelerated Examination, to make the above-identified application special.

The Petition is **DISMISSED**.

M.P.E.P. § 708.02, Section VIII which sets out the prerequisites for a grantable petition for Accelerated Examination under 37 C.F.R. § 102(d) states in relevant part:

A new application (one which has not received any examination by the examiner) may be granted special status provided that applicant (and this term includes applicant's attorney or agent) complies with each of the following items:

(a) Submits a petition to make special accompanied by the fee set forth in 37 CFR 1.17(h);

(b) Presents all claims directed to a single invention, or if the Office determines that all the claims presented are not obviously directed to a single invention, will make an election without traverse as a prerequisite to the grant of special status;

(c) Submits a statement(s) that a pre-examination search was made, listing the field of search by class and subclass, publication, Chemical Abstracts, foreign patents, etc. The pre-examination search must be directed to the invention as claimed in the application for which special status is requested. A search made by a foreign patent office satisfies this requirement;

(d) Submits one copy each of the references deemed most closely related to the subject matter encompassed by the claims if said references are not already of record; and

(e) Submits a detailed discussion of the references, which discussion points out, with the particularity required by 37 CFR 1.111 (b) and (c), how the claimed subject matter is patentable over the references.

The petition filed 20 May 2005 fails to adequately meet requirement (e) as set forth above. Responsive to requirement (e), applicant must provide a "detailed discussion of the references, which discussion points out, with the particularity required by 37 CFR 1.111 (b) and (c), how the claimed subject matter is patentable over the references." Petitioner should ensure that the above discussion is directed to *how the language of each independent claim is specifically distinguishable and patentable from the references* provided pursuant to requirement (d) supra.

Applicant's petition fails to discuss the **claimed limitations** with respect to the references in accordance with the requirements of 37 CFR 1.111 (b) and (c). The petition summarizes each independent claim, but the discussion of each prior art reference lacks the requisite instance/citation of a distinguishing limitation from each independent claim pointing out its patentability. The petition addresses the prior art references and concludes each with language/limitations similar to some of the claims, but the featured language does not appear to be commensurate with each of the independent claims. For example, claim 1 does not specify a limitation of "determining that a logical device has not been assigned to a specified logical unit" as Petitioner avers to be a patentable distinction in the discussion of each reference.

Filing for Accelerated Examination under MPEP § 708.02(VIII), requires Petitioner to provide a detailed discussion that includes identifying claim limitations with particularity for each independent claim that are absent in the relevant prior art references.

In the discussion of how the claims are patentable over the references, the petition must show, for each independent-claim, specific limitations that distinguish over each given reference in order to specify "how the claimed subject matter is patentable over the references."

Petition to Make Special **DISMISSED**.

Petitioner is given one opportunity to perfect the petition. Any request for reconsideration must be filed within TWO MONTHS of the mail date of this decision.

Until the renewed petition is submitted, the application will be returned to the examiner's docket to await treatment on the merits in the normal order of examination.

Brian L. Johnson
Special Program Examiner 6/21/05
Computer Architecture, Software and Information Security
571-272-3595

GO

UNITED STATES PATENT AND TRADEMARK OFFICE

Commissioner for Patents
United States Patent and Trademark Office
P.O. Box 1450
Alexandria, VA 22313-1450
www.uspto.gov

MAIL

AUG 19 2005

DIRECTOR OFFICE
TECHNOLOGY CENTER 2100

TOWNSEND AND TOWNSEND AND CREW, LLP
TWO EMBARCADERO CENTER
EIGHTH FLOOR
SAN FRANCISCO CA 94111-3834

In re Application of: Yasuaki Nakamura, et al.
Application No. 10/643,312
Filed: August 18, 2003
For: DISK CONTROL SYSTEM AND CONTROL METHOD OF DISK CONTROL SYSTEM

DECISION ON PETITION FOR ACCELERATED EXAMINATION UNDER M.P.E.P.§708.02(VIII)

This is a decision on the Renewed Petition filed July 25, 2005 under 37 C.F.R. 102(d) and M.P.E.P. § 708.02(VIII): Accelerated Examination, to make the above-identified application special.

The Petition is **GRANTED**.

M.P.E.P. § 708.02, Section VIII which sets out the prerequisites for a grantable petition for Accelerated Examination under 37 C.F.R. § 102(d) states in relevant part:

> A new application (one which has not received any examination by the examiner) may be granted special status provided that applicant (and this term includes applicant's attorney or agent) complies with each of the following items:
>
> (a) Submits a petition to make special accompanied by the fee set forth in 37 CFR 1.17(h);
>
> (b) Presents all claims directed to a single invention, or if the Office determines that all the claims presented are not obviously directed to a single invention, will make an election without traverse as a prerequisite to the grant of special status;
>
> (c) Submits a statement(s) that a pre-examination search was made, listing the field of search by class and subclass, publication, Chemical Abstracts, foreign patents, etc. The pre-examination search must be directed to the invention as claimed in the application for which special status is requested. A search made by a foreign patent office satisfies this requirement;
>
> (d) Submits one copy each of the references deemed most closely related to the subject matter encompassed by the claims if said references are not already of record; and

(e) Submits a detailed discussion of the references, which discussion points out, with the particularity required by 37 CFR 1.111 (b) and (c), how the claimed subject matter is patentable over the references.

Applicant's submission of July 25, 2005 meets all the criteria set out above. Accordingly, the petition is **GRANTED.**

The application is being forwarded to the Examiner for accelerated examination in accordance with the procedures set forth in M.P.E.P. §708.02, Section VIII. If the application is subsequently allowed, it will be given priority for printing. See M.P.E.P. §1309.

Vincent N. Trans
Special Program Examiner
Technology Center 2100
Computer Architecture, Software and Information Security
571-272-3613

RP

UNITED STATES PATENT AND TRADEMARK OFFICE

Commissioner for Patents
United States Patent and Trademark Office
P.O. Box 1450
Alexandria, VA 22313-1450
www.uspto.gov
OIW 11-04

NORRIS MCLAUGHLIN & MARCUS, P.A.
P O BOX 1018
SOMERVILLE NJ 08876

COPY MAILED

NOV 24 2004

OFFICE OF PETITIONS

In re Application of	:	
Logvinov et al.	:	
Application No. 10/643,316	:	ON PETITION
Filed: 19 August, 2003	:	
Att'y Docket No. 102362-033 US	:	

This is a decision on the petition under 1.137(b),[1] filed on 22 September, 2004, to revive the above-identified application.

The petition is **GRANTED**.

This application became abandoned on 14 January, 2004, for failure to timely reply to the Notice to File Missing Parts of Nonprovisional Application mailed on 13 November, 2003, which set a two (2) month shortened period for reply. No extensions of time under 37 CFR 1.136(a) were obtained. The filing of the present petition precedes the mailing of Notice of Abandonment.

---

[1]Effective December 1, 1997, the provisions of 37 CFR 1.137(b) now provide that where the delay in reply was unintentional, a petition may be filed to revive an abandoned application or a lapsed patent pursuant to 37 CFR 1.137(b). A grantable petition filed under the provisions of 37 CFR 1.137(b) must be accompanied by:

(1) the required reply, unless previously filed. In a nonprovisional application abandoned for failure to prosecute, the required reply may be met by the filing of a continuing application. In a nonprovisional application filed on or after June 8, 1995, and abandoned for failure to prosecute, the required reply may also be met by the filing of a request for continued examination in compliance with § 1.114. In an application or patent, abandoned or lapsed for failure to pay the issue fee or any portion thereof, the required reply must be the payment of the issue fee or any outstanding balance thereof. In an application abandoned for failure to pay the publication fee, the required reply must include payment of the publication fee.

(2) the petition fee as set forth in 37 CFR 1.17(m);

(3) a statement that the entire delay in filing the required reply from the due date for the reply until the filing of a grantable petition pursuant to 37 CFR 1.137(b) was unintentional. The Commissioner may required additional information where there is a question whether the delay was unintentional; and

(4) any terminal disclaimer (and fee as set forth in 37 CFR 1.20(d)) required pursuant to 37 CFR 1.137(c)).

Petitioner has submitted an executed declaration and the surcharge for its late filing with the present petition.

The application file is being referred to the Office of Initial Patent Examination for further processing.

Telephone inquiries concerning this matter may be directed to the undersigned at (571)272-3231.

D Wood

Douglas I. Wood
Senior Petitions Attorney
Office of Petitions

UNITED STATES PATENT AND TRADEMARK OFFICE

Commissioner for Patents
United States Patent and Trademark Office
P.O. Box 1450
Alexandria, VA 22313-1450
www.uspto.go

MAIL

JUL 0 9 2005

DIRECTOR OFFICE
TECHNOLOGY CENTER 2600

NORRIS, MCLAUGHLIN & MARCUS, P.A.
P.O. BOX 1018
SOMERVILLE, N.J. 08876

In re Application of
Oleg Logvinov
Application No. 10/643,316
Filed: August 19, 2003

For: METHOD AND SYSTEM FOR MAXIMIZING DATA THROUGHPUT RATE IN A POWER LINE COMMUNICATIONS SYSTEM BY MODIFYING PAYLOAD SYMBOL LENGTH

DECISION ON REQUEST TO WITHDRAW FROM RECORD

This is a decision on the request for withdrawal as agent of record filed on June 16, 2005.
A grantable request to withdraw as attorney/agent of record must:
(1) indicate the present mailing address of the attorney(s)/agent(s) who seek(s) to withdraw, and
(2) be signed by each attorney/agent seeking to withdraw or clearly be signed on their behalf, and
(3) be *approved* at least thirty (30) days prior to the maximum extendable period for response to any outstanding Office Action, and
(4) indicate the address to which future correspondence should be mailed.

Petitioner has met all of the above. Accordingly, the request is **GRANTED**.

Attorneys/agents associated in Customer No. 23526 to withdraw are withdrawn.

All future communications from the Office will be directed to the address listed below until otherwise notified by applicant. Applicant is reminded of the obligation to promptly notify the Patent and Trademark Office of any change in correspondence address to ensure receipt of all communications from the Office.

Kenneth A Wieder
Special Program Examiner
Technology Center 2600
Communications
(571) 272-2986

Cc: MR. JAMES REEBER
ARKADOS, INC.
948 U.S. HIGHWAY #22 EAST
NORTH PLAINFIELD, NEW JERSEY 07060

UNITED STATES PATENT AND TRADEMARK OFFICE

UNITED STATES DEPARTMENT OF COMMERCE
United States Patent and Trademark Office
Address: COMMISSIONER FOR PATENTS
P.O. Box 1450
Alexandria, Virginia 22313-1450
www.uspto.gov

CROMPTON, SEAGER & TUFTE, LLC
1221 NICOLLET AVENUE
SUITE 800
MINNEAPOLIS, MN 55403-2420

Mail Date: 04/21/2010

Applicant	: Dianne M. Goodwin	: DECISION ON REQUEST FOR
Patent Number	: 7588045	: RECALCULATION of PATENT
Issue Date	: 09/15/2009	: TERM ADJUSTMENT IN VIEW
Appliction No	: 10/643,333	: OF WYETH AND NOTICE OF INTENT TO
Filed	: 08/19/2003	: ISSUE CERTIFICATE OF CORRECTION
		:

The Request for Recalculation is **GRANTED** to the extent indicated.

The patent term adjustment has been determined to be **1069** days. The USPTO will *sua sponte* issue a certificate of correction reflecting the amount of PTA days determined by the recalculation.

Prior to the issuance of the certificate of correction, the USPTO will afford patentee an opportunity to be heard and request reconsideration. Accordingly, patentee has **one month or thirty (30) days**, whichever is longer, to file a request for reconsideration of this patent term adjustment calculation. See 35 U.S.C. 154(b)(3)(B)(ii) and 37 CFR 1.322(a)(4). No extensions of time will be granted under 37 CFR 1.136.

Patentee should use document code PET.OP if electronically filing a request for reconsideration of this patent term adjustment calculation. The patentee must also include the information required by 37 CFR 1.705(b)(2) and the fee required by 37 CFR 1.18(e). If patentee does not file a timely request for reconsideration of this patent term adjustment calculation including the information required by 37 CFR 1.705(b)(2) and the fee required by 37 CFR 1.18(e), the USPTO will issue a certificate of correction reflecting the PTA determination noted above.

Patentee should be aware that in order to preserve the right to review in the United States District Court for the District of Columbia of the USPTO patent term adjustment determination, patentee must ensure that he or she also take the steps required under 35 U.S.C. 154(b)(4)(A) in a timely manner. Nothing in the request for recalculation should be construed as providing an alternative time frame for commencing a civil action under 35 U.S.C. 154(b)(4)(A).

Any questions concerning this decision should be directed to the Office of Patent Legal Administration at 571-272-7702.

UNITED STATES PATENT AND TRADEMARK OFFICE

COMMISSIONER FOR PATENTS
UNITED STATES PATENT AND TRADEMARK OFFICE
P.O. BOX 1450
ALEXANDRIA, VA 22313-1450
www.uspto.gov

Craig Holloway
115 Fifth St.
Glenwood Springs, CO 81601

COPY MAILED

JAN 12 2007

OFFICE OF PETITIONS

In re Application of :
Holloway : DECISION ON PETITION
Application No. 10/643,373 :
Filed: August 20, 2003 :
For: SYNCHRONOUSLY/ :
SYNERGETICLY TIMED FUSE :
PROCEDURE OR PROCESS :

This is a decision on the petition under 37 C.F.R. § 1.137(b), filed August 21, 2006.

The petition is hereby **GRANTED**.

This application became abandoned for failure to timely submit a proper reply to the Office communication mailed September 8, 2005. The Office communication set a one month shortened statutory period of time for reply. Notice of Abandonment was mailed March 24, 2006.

A grantable petition pursuant to 37 C.F.R. § 1.137(b) must be accompanied by: (1) the required reply to the outstanding Office action or notice, unless previously filed; (2) the petition fee as set forth in 37 C.F.R. § 1.17(m); (3) a statement that the entire delay in filing the required reply from the due date for the reply until the filing of a grantable petition pursuant to 37 C.F.R. § 1.137(b) was unintentional; and (4)any terminal disclaimer (and fee set forth in 37 C.F.R. § 1.20(d)) required pursuant to 37 C.F.R. § 1.137(c).

The instant petition has been reviewed and found in compliance with the provisions of 37 C.F.R. § 1.137(b). Accordingly, the failure to timely submit a proper reply to the Notice is accepted as having been unintentionally delayed.

The instant petition has been reviewed and found in compliance with the provisions of 37 CFR 1.137(b). Accordingly, the failure to timely submit a proper reply to the Office communication

mailed September 8, 2005 is accepted as having been unintentionally delayed.

The above-identified application is being revived solely for purposes of continuity. As continuity has been established by this decision reviving the application, the application is again abandoned in favor of the continuation application 11/414,1940, filed May 1, 2006.

As to petitioner's request that no fee be assessed for the instant petition, petitioner is advised that any petition submitted pursuant to 37 CFR 1.137(b) must include the required petition fee. See, 37 CFR 1.137(b)(2).

Telephone inquiries concerning this matter may be directed to the undersigned at (571) 272-3205.

Alesia M. Brown
Petitions Attorney
Office of Petitions

UNITED STATES PATENT AND TRADEMARK OFFICE

Commissioner for Patents
United States Patent and Trademark Office
P.O. Box 1450
Alexandria, VA 22313-1450
www.uspto.gov

CRAIG HOLLOWAY
115 FIFTH STREET
GLENWOOD SPRINGS, CO 81601

COPY MAILED

JUN 0 4 2007

OFFICE OF PETITIONS

In re Application of :
Craig Holloway :
Application No. 10/643,373 : DECISION ON PETITION
Filed: August 20, 2003 :
For: SYNCHRONOUSLY/- :
SYNERGETICALLY TIMED FUSE
PROCEDURE OR PROCESS

This is a decision on the petition, filed February 12, 2007 (and supplemented on May 9 and June 1, 2007), which is being treated as a renewed petition under 37 CFR 1.137(b) requesting reconsideration of the decision mailed January 12, 2007.

The petition is **GRANTED**.

This application became abandoned for failure to reply in a timely manner to the Restriction Requirement mailed September 8, 2005, which set a shortened statutory period for reply of one (1) month or thirty (30) days (whichever is later). No extensions of time were obtained under the provisions of 37 CFR 1.136(a). Accordingly, the application became abandoned on October 9, 2005. A Notice of Abandonment was mailed on March 24, 2006.

The record discloses that a petition to revive was filed on August 21, 2006, which failed to clearly state the nature of the reply to continue prosecution of this application. It is noted that the petition makes reference to a divisional application, and, from the comments presented, applicant appears to be confused as to the correct way to proceed in the prosecution of this application. Applicant, in the renewed petition of February 12, 2007 states that revival solely for the purpose of continuity is not what he intended.

As applicant has now clearly stated that he wishes to proceed with prosecution of this application by way of an election in response to the Restriction Requirement of September 8, 2005, the decision mailed on January 12, 2007 granting the petition to

revive solely for the purpose of continuity with the continuing application is hereby vacated.

The petition satisfies the requirements of 37 CFR 1.137(b) in that petitioner has supplied (1) the reply in the form of an election, (2) the petition fee of $750, and (3) a proper statement of unintentional delay. Accordingly, the reply to the Office action of September 8, 2005 is accepted as being unintentionally delayed.

Telephone inquiries concerning this decision should be directed to the undersigned at (571) 272-3218. Inquiries concerning the status or examination procedures of this application should be directed to Examiner John Eldred in Technology Center AU 3641 at 571-272-6901.

This application is being referred to Technology Center AU 3641 for appropriate action in the normal course of business on the signed reply (election) received June 1, 2007.

Frances Hicks
Petitions Examiner
Office of Petitions

UNITED STATES PATENT AND TRADEMARK OFFICE

COMMISSIONER FOR PATENTS
UNITED STATES PATENT AND TRADEMARK OFFICE
P.O. BOX 1450
ALEXANDRIA, VA 22313-1450
www.uspto.gov

APR 19 2004

In re Application of	:	
Roy V. Ekbert	:	
Serial No. 10/643,399	:	DECISION ON PETITION
Filed: August 19, 2003	:	TO MAKE SPECIAL
For: INTERACTIVE MAGNETIC	:	
BOOK AND DISPLAY SYSTEM:		
AND METHOD	:	

Applicant's petition, filed January 14, 2004, requests that this application be rendered special for examination in that applicant is over sixty-five (65) years of age.

The petition has been reviewed and is found to be in compliance with the requirements for special status as set forth in Section 708.02(IV) of the Manual of Patent Examining Procedure (MPEP).

PETITION GRANTED.

E. Rollins-Cross, Director
Technology Center 3700

Harshaw Research Incorporated
P.O. Box 418
Ottawa, KS 66067

OIPE
OCT 11 2004
PATENT & TRADEMARK OFFICE

IFW

PTO/SB/83 (09-03)
Approved for use through 11/30/2005. OMB 0651-0035
U.S. Patent and Trademark Office, U.S. DEPARTMENT OF COMMERCE
Under the Paperwork Reduction Act of 1995, no persons are required to respond to a collection of information unless it displays a valid OMB control number.

REQUEST FOR WITHDRAWAL AS ATTORNEY OR AGENT AND CHANGE OF CORRESPONDENCE ADDRESS

Application Number	10/643,401
Filing Date	08/19/2003
First Named Inventor	FREULER, ET AL.
Art Unit	
Examiner Name	
Attorney Docket Number	POWRD-015C

To: Commissioner for Patents
P.O. Box 1450
Alexandria, VA 22313-1450

5/2/05
Approved
Jacqueline M. Stone, Director
Technology Center 1700

Please withdraw me as attorney or agent for the above identified patent application, and

☐ all the attorneys/agents of record.

☐ the attorneys/agents (with registration numbers) listed on the attached paper(s), or

☒ the attorneys/agents associated with Customer Number 007663

NOTE: This box can only be checked when the power of attorney of record in the application is to all the practitioners associated with the customer number

The reasons for this request are: Client has requested that all files be transferred to their in-house patent department.

CORRESPONDENCE ADDRESS

1. ☐ The correspondence address is NOT affected by this withdrawal.
2. ☒ Change the correspondence address and direct all future correspondence to:

☒ Customer Number: 00423

OR

☐ Firm or Individual Name					
Address					
Address					
City		State		Zip	
Country					
Telephone			Fax		

Name	MATTHEW A. NEWBOLES		
Signature		Registration No.	36,224
Date	10/7/04	Telephone No.	(949) 855-1246

NOTE: Withdrawal is effective when approved rather than when received. Unless there are at least 30 days between approval of withdrawal and the expiration date of a time period for response or possible extension period, the request to withdraw is normally disapproved.

This collection of information is required by 37 CFR 1.36. The information is required to obtain or retain a benefit by the public which is to file (and by the USPTO to process) an application. Confidentiality is governed by 35 U.S.C. 122 and 37 CFR 1.14. This collection is estimated to take 12 minutes to complete, including gathering, preparing, and submitting the completed application form to the USPTO. Time will vary depending upon the individual case. Any comments on the amount of time you require to complete this form and/or suggestions for reducing this burden should be sent to the Chief Information Officer, U.S. Patent and Trademark Office, U.S. Department of Commerce, P.O. Box 1450, Alexandria, VA 22313-1450. DO NOT SEND FEES OR COMPLETED FORMS TO THIS ADDRESS. **SEND TO: Commissioner for Patents, P.O. Box 1450, Alexandria, VA 22313-1450.**

If you need assistance in completing the form, call 1-800-PTO-9199 and select option 2.

BEST AVAILABLE COPY

UNITED STATES PATENT and TRADEMARK OFFICE
UNDER SECRETARY OF COMMERCE FOR INTELLECTUAL PROPERTY AND
DIRECTOR OF THE UNITED STATES PATENT AND TRADEMARK OFFICE
WASHINGTON, D.C. 20231
WWW.USPTO.GOV

Mailed: AUG 24 2004

CHK
Paper No. ____

In re Mark E. Thompson et al.
Serial No.: 10/643,413
Filed: August 18, 2003

DECISION ON PETITION UNDER *37 CFR 1.48*

Title: ORGANIC LIGHT EMITTING MATERIALS AND DEVICES

This is a decision on the PETITION TO CORRECT INVENTORSHIP IN A NON-PROVISIONAL PATENT APPLICATION filed April 8, 2004 to correct inventorship under 37 CFR 1.48(a) by adding the name of Bin Ma to the list of inventors of the instant application.

It is noted that the applicant has met the requirements of 37 C.F.R. § 1.48(a) by (1) submitting a request to correct the inventorship that sets forth the desired inventorship change; (2) providing a statement from each person being added as an inventor that the error in inventorship occurred without deceptive intention on his or her part; (3) providing a declaration of the actual inventors as required by 37 C.F.R. § 1.63; (4) providing the processing fee set forth in 1.17(i); and, (5) providing the written consent of the assignee.

The request is **GRANTED**.

The application file is being forwarded to the appropriate section of the Patent and Trademark Office for correction of the record.

Cynthia H. Kelly
Supervisory Patent Examiner
Technology Center 1700

UNITED STATES PATENT AND TRADEMARK OFFICE

Commissioner for Patents
United States Patent and Trademark Office
P.O. Box 1450
Alexandria, VA 22313-1450
www.uspto.gov

MAR - 7 2005

MAILED
MAR 7 2005
OFFICE OF THE DIRECTOR
TC 3600

FISH & RICHARDSON PC
225 Franklin Street
Boston, MA 02110

In re application of
Jayendu Patel et al.
Application No. 10/643,439
Filed: August 19, 2003
For: STATISTICAL PERSONALIZED RECOMMENDATION SYSTEM

: **DECISION ON PETITION**
: **TO MAKE SPECIAL**
: **(ACCELERATED**
: **EXAMINATION)**

This is in response to the petition filed on September 15, 2004 to make the above-identified application special on the basis of special examining procedure for certain new applications - accelerated examination as set forth in MPEP § 708.02 VIII.

The requirements for granting special status under this section are: (A) a petition to make special accompanied by the fee set forth in 37 CFR 1.17(i); (B) all claims being directed to a single invention, or an election without traverse if the Office determines that all the claims are not directed to a single invention; (C) a statement that a pre-examination search was made listing the field of search; (D) one copy of each of the references deemed most closely related to the subject matter encompassed by the claims if said references are not already of record; and (E) a detailed discussion of how the claimed subject matter is patentable over the references in accordance with 37 CFR 1.111 (b) and (c).

Since all of the requirements for special status under MPEP § 708.02 VIII have been met, the petition is **GRANTED**.

The examiner is directed (1) to make an interference search for possible interfering applications, (2) to promptly examine this application out of turn, and (3) if any interfering application is discovered, to examine such application simultaneously and state in the first official letter of such application that it is being taken out of turn because of a possible interference.

Petitioner is advised that this application will continue to be special, throughout its entire prosecution and pendency, including interference or appeal, if any, only if petitioner makes a prompt ***bona fide*** effort, in response to each Office action, to place the application in condition for allowance, even if it is necessary to conduct an interview with the examiner to accomplish this purpose.

SUMMARY: Petition to Make Special **GRANTED**.

Steven N. Meyers
Special Programs Examiner
Technology Center 3600
(703) 308-3868

SNM/pav: 03/01/05

UNITED STATES PATENT AND TRADEMARK OFFICE

Commissioner for Patents
United States Patent and Trademark Office
P.O. Box 1450
Alexandria, VA 22313-1450
www.uspto.gov

RICHARD R. MICHAUD
MCCORMICK, PAULDING & HUBER LLP
CITY PLACE II
185 ASYLUM STREET
HARTFORD CT 06103

COPY MAILED

JUL 14 2005

OFFICE OF PETITIONS

In re Application of :
Jerome A. Cohen :
Application No. 10/643,447 : DECISION GRANTING PETITION
Filed: August 19, 2003 : UNDER 37 CFR 1.137(b)
Attorney Docket No. 6842-0001-1 :

This is a decision on the petition under 37 CFR 1.137(b), filed April 28, 2005, to revive the above-identified application.

The petition is **GRANTED**.

The petition satisfies the conditions for revival pursuant to the provisions of 37 CFR 1.137(b) in that (1) the reply in the form of an amendment; (2) the petition fee; and (3) the required statement of unintentional delay have been received. Accordingly, the reply to the nonfinal Office action of October 20, 2004, is accepted as having been unintentionally delayed.

Pursuant to 37 CFR 1.136, an extension of time must be filed prior to the expiration of the maximum period obtainable for reply to avoid abandonment. Accordingly, since the $1080 extension of time submitted with the petition on April 28, 2005 was subsequent to the maximum period obtainable for reply, this fee is unnecessary and will be credited to petitioner's deposit account.

The file does not indicate a change of address has been submitted, although the address given on the petition differs from the address of record. If appropriate, a change of address should be filed in accordance with MPEP 601.03. A courtesy copy of this decision is being mailed to the address given on the petition; however, the Office will mail all future correspondence solely to the address of record.

Telephone inquiries concerning this decision should be directed to the undersigned at (571) 272-3208.

This matter is being referred to Technology Center AU 3635.

Karen Creasy

Karen Creasy
Petitions Examiner
Office of Petitions
Office of the Deputy Commissioner
for Patent Examination Policy

cc:
MICHAUD-DUFFY GROUP LLP
306 INDUSTRIAL PARK ROAD,
SUITE 206
MIDDLETOWN, CT 06457-1532

UNITED STATES PATENT AND TRADEMARK OFFICE

COMMISSIONER FOR PATENTS
UNITED STATES PATENT AND TRADEMARK OFFICE
P.O. BOX 1450
ALEXANDRIA, VA 22313-1450
www.uspto.gov

MAILED

MAR 04 2008

TECHNOLOGY CENTER 2100

Rockwell Collins, Inc.
400 Collins Road NE
M/S 124-323
Cedar Rapids, IA 52498

In re Application of: Dipak P. Patel
Eric O. Zuber
Application No. 10/643,451
Attorney Docket No. 02CR360/KE
(047141-0311)
Filed: August 19, 2003
For: Fail-Safe Transmission of Multiple Independent Levels of Security Using Standard Data Busses Apparatus and Method

Petition under 37 CFR 1.48(a)

In view of the papers and petition filed November 05, 2007, it has been found that this nonprovisional application, as filed, through error and without deceptive intent, improperly set forth the inventorship, and accordingly, this application has been corrected in compliance with 37 CFR 1.48(a). The inventorship of this application has been changed by adding Robert R. Jakoubek, such that the current inventorship is now Dipak P. Patel, Eric O. Zuber, and Robert R. Jakoubek.

The petition has been **Granted**.

The application will be forwarded to the Office of Initial Patent Examination (OIPE) for issuance of a corrected filing receipt, and correction of Office records to reflect the inventorship as corrected.

Inquiries to this decision may be directed to Special Programs Examiner Tod Swann at (571) 272-3612.

KAMBIZ ZAND
SUPERVISORY PATENT EXAMINER

Kambiz Zand, SPE
Technology Center 2100
Cryptography and Network Security

Hi,

This is a Petition Decision for Application 10/643,451.

Can you send this decision for scanning and message OIPE to correct this filing receipt?
(Tod Swann recommended this)

Thanks!

-JASON GEE
AU 2134
ext. 2-6431

UNITED STATES PATENT AND TRADEMARK OFFICE

Commissioner for Patents
United States Patent and Trademark Office
P.O. Box 1450
Alexandria, VA 22313-1450
www.uspto.gov

ROCKWELL COLLINS, INC.
INTELLECTUAL PROPERTY DEPARTMENT
400 COLLINS ROAD NE
M/S 124-323
CEDAR RAPIDS, IA 52498

COPY MAILED

MAR 04 2008

In re Application of :
Eric O. Zuber et al :
Application No. 10/643,451 : DECISION ON PETITION
Filed: August 19, 2003 : UNDER 37 CFR 1.78(a)(3)
Attorney Docket No. 02CR360/KE :

This is a decision on the petition filed November 5, 2007, which is being treated as a petition under 37 CFR 1.78(a)(3), to accept an unintentionally delayed claim under 35 U.S.C. § 120 for the benefit of priority to the prior-filed nonprovisional application set forth in the amendment filed with the petition.

The petition is **DISMISSED**.

A petition for acceptance of a claim for late priority under 37 CFR 1.78(a)(3) is only applicable to those applications filed on or after November 29, 2000. Further, the petition is appropriate only after the expiration of the period specified in 37 CFR 1.78(a)(2)(ii). In addition, the petition under 37 CFR 1.78(a)(3) must be accompanied by:

(1) the reference required by 35 U.S.C. § 120 and 37 CFR 1.78(a)(2)(i) of the prior-filed application, unless previously submitted;
(2) the surcharge set forth in § 1.17(t); and
(3) a statement that the entire delay between the date the claim was due under 37 CFR 1.78(a)(2)(ii) and the date the claim was filed was unintentional. The Director may require additional information where there is a question whether the delay was unintentional.

The petition does not satisfy item (1) above.

The reference to add the above-noted, prior-filed application in the first sentence of the specification on page one following the title is not acceptable as drafted since it improperly incorporates by reference the prior-filed application. An incorporation

by reference statement added after an application's filing date is not effective because no new matter can be added to an application after its filing date (*see* 35 U.S.C. § 132(a)). If an incorporation by reference statement is included in an amendment to the specification to add a benefit claim under 35 U.S.C. § 120 after the filing date of the application, the amendment would not be proper. When a benefit claim under 35 U.S.C. § 120 is submitted after the filing of an application, the reference to the prior application cannot include an incorporation by reference statement of the prior application. *See* Dart Industries v. Banner, 636 F.2d 684, 207 USPQ 273 (C.A.D.C. 1980). *Note* MPEP §§ 201.06(c) and 608.04(b).

If reconsideration of this decision is desired, a renewed petition under 37 CFR § 1.78(a)(3) and an Application Data Sheet or an amendment (complying with the provisions of 37 CFR 1.121 and 37 CFR 1.76(b)(5)) to correct the above matters are required.

Further correspondence with respect to this matter should be addressed as follows:

By mail: Mail Stop PETITIONS
Commissioner for Patents
Post Office Box 1450
Alexandria, VA 22313-1450

By hand: Customer Service Window
Mail Stop Petitions
Randolph Building
401 Dulany Street
Alexandria, VA 22314

By fax: (571) 273-8300
ATTN: Office of Petitions

Any questions concerning this matter may be directed to Irvin Dingle at (571) 272-3210.

David Bucci
Petition Examiner
Office of Petitions

UNITED STATES PATENT AND TRADEMARK OFFICE

Commissioner for Patents
United States Patent and Trademark Office
P.O. Box 1450
Alexandria, VA 22313-1450
www.uspto.gov

ROCKWELL COLLINS, INC.
INTELLECTUAL PROPERTY DEPARTMENT
400 COLLINS ROAD NE
M/S 124-323
CEDAR RAPIDS, IA 52498

COPY MAILED

OCT 27 2008

OFFICE OF PETITIONS

In re Application of :
Eric O. Zuber et al :
Application No. 10/643,451 : DECISION ON PETITION
Filed: August 19, 2003 : UNDER 37 CFR 1.78(a)(3)
Attorney Docket No. 02CR360/KE :

This is a decision on the renewed petition under 37 CFR 1.78(a)(3), filed May 8, 2008, to accept an unintentionally delayed claim under 35 U.S.C. § 120 for the benefit of priority to the prior-filed nonprovisional application set forth in the amendment filed with the petition.

The petition is **GRANTED**.

A petition for acceptance of a claim for late priority under 37 CFR 1.78(a)(3) is only applicable to those applications filed on or after November 29, 2000. Further, the petition is appropriate only after the expiration of the period specified in 37 CFR 1.78(a)(2)(ii). In addition, the petition under 37 CFR 1.78(a)(3) must be accompanied by:

(1) the reference required by 35 U.S.C. § 120 and 37 CFR 1.78(a)(2)(i) of the prior-filed application, unless previously submitted;
(2) the surcharge set forth in § 1.17(t); and
(3) a statement that the entire delay between the date the claim was due under 37 CFR 1.78(a)(2)(ii) and the date the claim was filed was unintentional. The Director may require additional information where there is a question whether the delay was unintentional.

All of the above requirements having been satisfied, the late claim for priority under 35 U.S.C. § 120 is accepted as being unintentionally delayed.

The granting of the petition to accept the delayed benefit claim to the prior-filed application under 37 CFR 1.78(a)(3) should not be construed as meaning that this application is entitled to the benefit of the prior-filed application. In order for this application to be entitled to the benefit of the prior-filed application, all other requirements under 35 U.S.C. § 120 and 37 CFR 1.78(a)(1) and (a)(2) must be met. Similarly, the fact that the corrected Filing Receipt

accompanying this decision on petition includes the prior-filed application should not be construed as meaning that applicant is entitled to the claim for benefit of priority to the prior-filed application noted thereon. Accordingly, the examiner will, in due course, consider this benefit claim and determine whether the application is entitled to the benefit of the earlier filing date.

A corrected Filing Receipt, which includes the priority claim to the prior-filed nonprovisional application, accompanies this decision on petition.

Any inquiries concerning this decision may be directed to Irvin Dingle at (571) 272-3210. All other inquiries concerning either the examination procedures or status of the application should be directed to the Technology Center.

This application is being forwarded to Technology Center Art Unit 2434 for consideration by the examiner of applicant's entitlement to claim benefit of priority under 35 U.S.C. § 120 to the prior-filed application.

David Bucci
Petition Examiner
Office of Petitions

ATTACHMENT: Corrected Filing Receipt

UNITED STATES PATENT AND TRADEMARK OFFICE

UNITED STATES DEPARTMENT OF COMMERCE
United States Patent and Trademark Office
Address: COMMISSIONER FOR PATENTS
P.O. Box 1450
Alexandria, Virginia 22313-1450
www.uspto.gov

APPLICATION NUMBER	FILING or 371(c) DATE	GRP ART UNIT	FIL FEE REC'D	ATTY.DOCKET.NO	TOT CLAIMS	IND CLAIMS
10/643,451	08/19/2003	2434	964	02CR360/KE	20	4

CONFIRMATION NO. 4397

CORRECTED FILING RECEIPT

26383
ROCKWELL COLLINS, INC.
INTELLECTUAL PROPERTY DEPARTMENT
400 COLLINS ROAD NE
M/S 124-323
CEDAR RAPIDS, IA 52498

Date Mailed: 10/27/2008

Receipt is acknowledged of this non-provisional patent application. The application will be taken up for examination in due course. Applicant will be notified as to the results of the examination. Any correspondence concerning the application must include the following identification information: the U.S. APPLICATION NUMBER, FILING DATE, NAME OF APPLICANT, and TITLE OF INVENTION. Fees transmitted by check or draft are subject to collection. Please verify the accuracy of the data presented on this receipt. **If an error is noted on this Filing Receipt, please submit a written request for a Filing Receipt Correction. Please provide a copy of this Filing Receipt with the changes noted thereon. If you received a "Notice to File Missing Parts" for this application, please submit any corrections to this Filing Receipt with your reply to the Notice. When the USPTO processes the reply to the Notice, the USPTO will generate another Filing Receipt incorporating the requested corrections**

Applicant(s)

Eric O. Zuber, South Amana, IA;
Dipak P. Patel, Cedar Rapids, IA;

Power of Attorney:
Kyle Eppele--34155
Nathan Jensen--41460

Domestic Priority data as claimed by applicant

This application is a CON of 10/229,877 08/28/2002

Foreign Applications

If Required, Foreign Filing License Granted: 11/13/2003

The country code and number of your priority application, to be used for filing abroad under the Paris Convention, is **US 10/643,451**

Projected Publication Date: Request for Non-Publication Acknowledged

Non-Publication Request: Yes

Early Publication Request: No

Title

Fail-safe transmission of multiple independent levels of security using standard data busses apparatus and method

Preliminary Class

713

PROTECTING YOUR INVENTION OUTSIDE THE UNITED STATES

Since the rights granted by a U.S. patent extend only throughout the territory of the United States and have no effect in a foreign country, an inventor who wishes patent protection in another country must apply for a patent in a specific country or in regional patent offices. Applicants may wish to consider the filing of an international application under the Patent Cooperation Treaty (PCT). An international (PCT) application generally has the same effect as a regular national patent application in each PCT-member country. The PCT process **simplifies** the filing of patent applications on the same invention in member countries, but **does not result** in a grant of "an international patent" and does not eliminate the need of applicants to file additional documents and fees in countries where patent protection is desired.

Almost every country has its own patent law, and a person desiring a patent in a particular country must make an application for patent in that country in accordance with its particular laws. Since the laws of many countries differ in various respects from the patent law of the United States, applicants are advised to seek guidance from specific foreign countries to ensure that patent rights are not lost prematurely.

Applicants also are advised that in the case of inventions made in the United States, the Director of the USPTO must issue a license before applicants can apply for a patent in a foreign country. The filing of a U.S. patent application serves as a request for a foreign filing license. The application's filing receipt contains further information and guidance as to the status of applicant's license for foreign filing.

Applicants may wish to consult the USPTO booklet, "General Information Concerning Patents" (specifically, the section entitled "Treaties and Foreign Patents") for more information on timeframes and deadlines for filing foreign patent applications. The guide is available either by contacting the USPTO Contact Center at 800-786-9199, or it can be viewed on the USPTO website at http://www.uspto.gov/web/offices/pac/doc/general/index.html.

For information on preventing theft of your intellectual property (patents, trademarks and copyrights), you may wish to consult the U.S. Government website, http://www.stopfakes.gov. Part of a Department of Commerce initiative, this website includes self-help "toolkits" giving innovators guidance on how to protect intellectual property in specific countries such as China, Korea and Mexico. For questions regarding patent enforcement issues, applicants may call the U.S. Government hotline at 1-866-999-HALT (1-866-999-4158).

LICENSE FOR FOREIGN FILING UNDER

Title 35, United States Code, Section 184

Title 37, Code of Federal Regulations, 5.11 & 5.15

GRANTED

The applicant has been granted a license under 35 U.S.C. 184, if the phrase "IF REQUIRED, FOREIGN FILING LICENSE GRANTED" followed by a date appears on this form. Such licenses are issued in all applications where

the conditions for issuance of a license have been met, regardless of whether or not a license may be required as set forth in 37 CFR 5.15. The scope and limitations of this license are set forth in 37 CFR 5.15(a) unless an earlier license has been issued under 37 CFR 5.15(b). The license is subject to revocation upon written notification. The date indicated is the effective date of the license, unless an earlier license of similar scope has been granted under 37 CFR 5.13 or 5.14.

This license is to be retained by the licensee and may be used at any time on or after the effective date thereof unless it is revoked. This license is automatically transferred to any related applications(s) filed under 37 CFR 1.53(d). This license is not retroactive.

The grant of a license does not in any way lessen the responsibility of a licensee for the security of the subject matter as imposed by any Government contract or the provisions of existing laws relating to espionage and the national security or the export of technical data. Licensees should apprise themselves of current regulations especially with respect to certain countries, of other agencies, particularly the Office of Defense Trade Controls, Department of State (with respect to Arms, Munitions and Implements of War (22 CFR 121-128)); the Bureau of Industry and Security, Department of Commerce (15 CFR parts 730-774); the Office of Foreign AssetsControl, Department of Treasury (31 CFR Parts 500+) and the Department of Energy.

NOT GRANTED

No license under 35 U.S.C. 184 has been granted at this time, if the phrase "IF REQUIRED, FOREIGN FILING LICENSE GRANTED" DOES NOT appear on this form. Applicant may still petition for a license under 37 CFR 5.12, if a license is desired before the expiration of 6 months from the filing date of the application. If 6 months has lapsed from the filing date of this application and the licensee has not received any indication of a secrecy order under 35 U.S.C. 181, the licensee may foreign file the application pursuant to 37 CFR 5.15(b).

UNITED STATES PATENT AND TRADEMARK OFFICE

Commissioner for Patents
United States Patent and Trademark Office
P.O. Box 1450
Alexandria, VA 22313-1450
www.uspto.gov

KLAUS J. BACH
4407 TWIN OAKS DRIVE
MURRYSVILLE, PA 15668

COPY MAILED

JUL 13 2004

OFFICE OF PETITIONS

In re Application of :
Haltermann, et al. :
Application No. 10/643,474 : ON PETITION
Filed: August 19, 2003 :
Attorney Docket No. WM 132 :

This is a decision on the papers styled, "Petition under 37 CFR 1.181," filed June 28, 2004, which has been treated as a petition under 37 CFR 1.53, requesting that the above-identified application be accorded a filing date of August 19, 2003, including two (2) pages of drawings.

The application was submitted on August 19, 2003. However, on June 21, 2004, the Office of Initial Patent Examination (OIPE) mailed a "Notice Of Incomplete Nonprovisional Application" that stated the application had not been accorded a filing date, and that the application was deposited without drawings.

In response, on June 28, 2004, the present petition was filed wherein petitioner argues that two (2) pages of drawings were filed on August 19, 2003. The papers were accompanied by a copy of applicant's postcard receipt that acknowledges receipt of two (2) pages of drawings on August 19, 2003. A review of the application file indicates the presence of zero (0) sheets of drawings. It is assumed that missing sheets of drawings were misplaced by the Office.

In view of the above, the petition is granted.

The $130.00 petition fee will be refunded to deposit account no. 50-0465.

This application will be returned to OIPE for further processing with a filing date of August 19, 2003, using the two (2) pages of drawings, supplied on June 28, 2004.

Telephone inquiries concerning this matter may be directed to the undersigned at (703) 306-9200.

Edward J. Tannouse
Petitions Attorney
Office of Petitions
United States Patent and Trademark Office

UNITED STATES PATENT AND TRADEMARK OFFICE

COMMISSIONER FOR PATENTS
UNITED STATES PATENT AND TRADEMARK OFFICE
P.O. BOX 1450
ALEXANDRIA, VA 22313-1450
www.uspto.gov

Buckley, Maschoff, Talwalker LLC
5 Elm Street
New Canaan, CT 06840

COPY MAILED

JAN 27 2005

OFFICE OF PETITIONS

In re Application of :
Robert A. Dunstan :
Application No. 10/643,475 : DECISION GRANTING
Filed: August 19, 2003 : PETITION
Attorney Docket No. P17354 :

This is a decision on the petition filed October 7, 2004, requesting that the above-identified application be accorded a filing date of August 19, 2003, rather than the presently accorded date of August 18, 2003. The petition is properly treated as a petition under 37 CFR 1.10(c).

The petition is **GRANTED**.

Petitioner alleges that the application was deposited in Express Mail Service on August 19, 2003. In support, the petition is accompanied by a copy of Express Mail receipt No. EV334067866US (the same Express Mail number found on the original application papers located in the official file) showing a "date in" of August 19, 2003.

The Office considers the date the paper or fee is shown to have been deposited as "Express Mail" to be the "date-in" on the Express Mail label, MPEP 513. In view of the copy of the Express Mail receipt, it is confirmed that the package bearing Express Mail label No. EV334067866US was accepted at the United States Postal Service on August 19, 2003, and the filing date of the application is accorded such.

This application file is being forwarded to the Office of Initial Patent Examination Division for further **processing with a filing date of August 19, 2003.** Thereafter, the application file will be forwarded to Technology Center 2100 for examination in due course.

Telephone inquiries concerning this matter may be directed to the undersigned at (571) 272-3223.

Marianne E. Jenkins
Petitions Examiner
Office of Petitions
Office of the Deputy Commissioner
for Patent Examination Policy

UNITED STATES PATENT AND TRADEMARK OFFICE

UNITED STATES DEPARTMENT OF COMMERCE
United States Patent and Trademark Office
Address: COMMISSIONER FOR PATENTS
P.O. Box 1450
Alexandria, Virginia 22313-1450
www.uspto.gov

APPL NO.	FILING OR 371 (c) DATE	ART UNIT	FIL FEE REC'D	ATTY.DOCKET NO	DRAWINGS	TOT CLMS	IND CLMS
10/643,475	08/19/2003	2157	936	P17354	7	21	5

CONFIRMATION NO. 6003

28062
BUCKLEY, MASCHOFF, TALWALKAR LLC
5 ELM STREET
NEW CANAAN, CT 06840

CORRECTED FILING RECEIPT

OC000000015492788

Date Mailed: 03/17/2005

Receipt is acknowledged of this regular Patent Application. It will be considered in its order and you will be notified as to the results of the examination. Be sure to provide the U.S. APPLICATION NUMBER, FILING DATE, NAME OF APPLICANT, and TITLE OF INVENTION when inquiring about this application. Fees transmitted by check or draft are subject to collection. Please verify the accuracy of the data presented on this receipt. **If an error is noted on this Filing Receipt, please write to the Office of Initial Patent Examination's Filing Receipt Corrections, facsimile number 703-746-9195. Please provide a copy of this Filing Receipt with the changes noted thereon. If you received a "Notice to File Missing Parts" for this application, please submit any corrections to this Filing Receipt with your reply to the Notice. When the USPTO processes the reply to the Notice, the USPTO will generate another Filing Receipt incorporating the requested corrections (if appropriate).**

Applicant(s)

Robert A. Dunstan, Forest Grove, OR;

Power of Attorney: The patent practitioners associated with Customer Number **28062**.

Domestic Priority data as claimed by applicant

Foreign Applications

If Required, Foreign Filing License Granted: 04/30/2004

The country code and number of your priority application, to be used for filing abroad under the Paris Convention, is US10/643,475

Projected Publication Date: Not Applicable

Non-Publication Request: No

Early Publication Request: No

Title

Computer system power policy adjustment in response to an affirmative indication from a user

Preliminary Class

709

LICENSE FOR FOREIGN FILING UNDER
Title 35, United States Code, Section 184
Title 37, Code of Federal Regulations, 5.11 & 5.15

GRANTED

The applicant has been granted a license under 35 U.S.C. 184, if the phrase "IF REQUIRED, FOREIGN FILING LICENSE GRANTED" followed by a date appears on this form. Such licenses are issued in all applications where the conditions for issuance of a license have been met, regardless of whether or not a license may be required as set forth in 37 CFR 5.15. The scope and limitations of this license are set forth in 37 CFR 5.15(a) unless an earlier license has been issued under 37 CFR 5.15(b). The license is subject to revocation upon written notification. The date indicated is the effective date of the license, unless an earlier license of similar scope has been granted under 37 CFR 5.13 or 5.14.

This license is to be retained by the licensee and may be used at any time on or after the effective date thereof unless it is revoked. This license is automatically transferred to any related applications(s) filed under 37 CFR 1.53(d). This license is not retroactive.

The grant of a license does not in any way lessen the responsibility of a licensee for the security of the subject matter as imposed by any Government contract or the provisions of existing laws relating to espionage and the national security or the export of technical data. Licensees should apprise themselves of current regulations especially with respect to certain countries, of other agencies, particularly the Office of Defense Trade Controls, Department of State (with respect to Arms, Munitions and Implements of War (22 CFR 121-128)); the Office of Export Administration, Department of Commerce (15 CFR 370.10 (j)); the Office of Foreign Assets Control, Department of Treasury (31 CFR Parts 500+) and the Department of Energy.

NOT GRANTED

No license under 35 U.S.C. 184 has been granted at this time, if the phrase "IF REQUIRED, FOREIGN FILING LICENSE GRANTED" DOES NOT appear on this form. Applicant may still petition for a license under 37 CFR 5.12, if a license is desired before the expiration of 6 months from the filing date of the application. If 6 months has lapsed from the filing date of this application and the licensee has not received any indication of a secrecy order under 35 U.S.C. 181, the licensee may foreign file the application pursuant to 37 CFR 5.15(b).

United States Patent and Trademark Office

Commissioner for Patents
United States Patent and Trademark Office
P.O. Box 1450
Alexandria, VA 22313-1450
www.uspto.gov

Chih-Ching Hsien
235 Box 8-24
Chung-Ho
Taipei Hsien
TAIWAN, R.O.C.

COPY MAILED

SEP 15 2005

OFFICE OF PETITIONS

In re Application of
CHIH-CHING HSIEN
Application No.: 10/643,480
Filed: 15 August 2003
Attorney Docket No.: PUSA030716

ON PETITION

This is a decision on the petition under 37 CFR 1.137(b), filed by facsimile transmission on 31 March 2005 and on 12 April 2005 to revive the application identified above.

The petition is **GRANTED.**

The above-identified application became abandoned for failure to submit the issue fee and publication fee in a timely manner in reply to the Notice of Allowance mailed 13 October 2004, which set a statutory period for reply of three (3) months. Accordingly, the above-identified application became abandoned on 14 January 2005.

The application file is being referred to the Office of Publications for further processing into a patent.

Telephone inquiries concerning this decision should be directed to Jeremy Fleming, at 571-272-3284.

Andrea Smith
Petitions Examiner
Office of Petitions
Office of the Deputy Commissioner
for Patent Examination Policy

Jeremy Fleming
Paralegal Specialist
Office of PCT Legal Administration

SPE RESPONSE FOR CERTIFICATE OF CORRECTION

Paper No.: _____

DATE : 8/7/09

TO SPE OF : ART UNIT 2853 Stephen Meier (Spe)

SUBJECT : Request for Certificate of Correction for Appl. No.: 10/634503 Patent No.: 6863372

Please respond to this request for a certificate of correction within 7 days.

FOR IFW FILES:

Please review the requested changes/corrections as shown in the **COCIN** document(s) in the IFW application image. No new matter should be introduced, nor should the scope or meaning of the claims be changed.

Please complete the response (see below) and forward the completed response to scanning using document code **COCX**.

FOR PAPER FILES:

Please review the requested changes/corrections as shown in the attached certificate of correction. Please complete this form (see below) and forward it with the file to:

Certificates of Correction Branch (CofC)
South Tower - 9A22
Palm Location 7580

H. Pipp
Certificates of Correction Branch
703-308-9390 ext. _____

Thank You For Your Assistance

The request for issuing the above-identified correction(s) is hereby:
Note your decision on the appropriate box.

☑ **Approved**	**All** changes apply.
☐ **Approved in Part**	Specify below which changes **do not** apply.
☐ **Denied**	State the reasons for denial below.

Comments: _____

DK

STEPHEN MEIER 2853
SUPERVISORY PATENT EXAMINER
SPE Art Unit

UNITED STATES PATENT AND TRADEMARK OFFICE

Commissioner for Patents
United States Patent and Trademark Office
P.O. Box 1450
Alexandria, VA 22313-1450
www.uspto.gov

HOFFMANN & BARON, LLP
6900 JERICHO TURNPIKE
SYOSSET, NY 11791

COPY MAILED

AUG 2 0 2009

OFFICE OF PETITIONS

In re Application of :
Scott SMITH, et al :
Application No. 10/643,527 : DECISION ON PETITION
Filed: August 19, 2003 : TO WITHDRAW
Attorney Docket No. S63.2Q-14457-US02 : FROM RECORD
:

This is a decision on the Request to Withdraw as attorney or agent of record under 37 C.F.R. § 1.36(b), filed March 17, 2009.

The request is **NOT APPROVED** because it is moot.

A review of the file record indicates that the power of attorney to Hoffmann & Baron, LLP, has been revoked by the assignee of the patent application on July 8, 2009. Accordingly, the request to withdraw under 37 C.F.R. § 1.36(b) is moot.

Telephone inquires concerning this decision should be directed to undersigned at 571-272- 6735.

/Diane Goodwyn/
Petitions Examiner
Office of Petitions

UNITED STATES PATENT AND TRADEMARK OFFICE

Commissioner for Patents
United States Patent and Trademark Office
P.O. Box 1450
Alexandria, VA 22313-1450
www.uspto.gov

FISH & NEAVE IP GROUP
ROPES & GRAY LLP
ONE INTERNATIONAL PLACE
BOSTON MA 02110-2624

COPY MAILED

JAN 30 2007

OFFICE OF PETITIONS

In re Application of	:	
Pitman et al.	:	
Application No. 10/643589	:	DECISION GRANTING
Filing or 371(c) Date: 08/18/2003	:	STATUS UNDER
Attorney Docket No.	:	37 CFR 1.47(a)
WYTH-P01-002	:	

This is in response to a Petition Under 37 CFR 1.47, filed July 2, 2004, to allow the other inventor(s) to proceed with the application on behalf of himself or herself and the nonsigning inventor.

The petition is **granted**.

The above-identified application and papers have been reviewed and found in compliance with 37 CFR 1.47(a). This application is hereby accorded Rule 1.47(a) status.

Petitioner has shown that the non-signing inventor, Glenn Larson, refuses to join in the application.

As provided in Rule 1.47(a), this Office will forward notice of this application's filing to the non-signing inventor at the addresses given in the Petition. Notice of the filing of this application will also be published in the Official Gazette.

The application file is being referred to the Office of Initial Patent Examination for continued processing.

Telephone inquiries related to this decision may be directed to the undersigned at (571) 272-3232.

Derek L. Woods
Attorney
Office of Petitions

UNITED STATES PATENT AND TRADEMARK OFFICE

Commissioner for Patents
United States Patent and Trademark Office
P.O. Box 1450
Alexandria, VA 22313-1450
www.uspto.gov

Dr. Glenn Larson
112 Maynard Farm Road
Sudbury, MA 01776

COPY MAILED

JAN 30 2007

OFFICE OF PETITIONS

In re Application of	:	
Pitman et al.	:	
Application No. 10/643589	:	LETTER
Filing or 371(c) Date: 08/18/2003	:	
Attorney Docket No.	:	
WYTH-P01-002	:	

Dear Dr. Larson:

You are named as a joint inventor in the above-identified United States patent application filed under the provisions of 35 U.S.C. 116 (United States Code) and 37 CFR 1.47(a), Rules of Practice in Patent Cases. Should a patent be granted on the application you will be designated therein as a joint inventor.

As a named inventor you are entitled to inspect any paper in the file wrapper of the application, order copies of all or any part thereof (at a prepaid cost per 37 CFR 1.19) or make your position of record in the application. Alternatively, you may arrange to do any of the preceding through a registered patent attorney or agent presenting written authorization from you. If you care to join the application, counsel of record (see below) would presumably assist you. Joining in the application would entail the filing of an appropriate oath or declaration by you pursuant to 37 CFR 1.63.

Telephone inquiries regarding this communication should be directed to the undersigned at (571) 272-3232. Requests for information regarding your application should be directed to the File Information Unit at (703) 308-2733. Information regarding how to pay for and order a copy of the application, or a specific paper in the application, should be directed to Certification Division at (703) 308-9726 or 1-800-972-6382 (outside the Washington D.C. area).

Derek L. Woods
Attorney
Office of Petitions

CC: FISH & NEAVE IP GROUP
ROPES & GRAY LLP
ONE INTERNATIONAL PLACE
BOSTON MA 02110-2624

UNITED STATES PATENT AND TRADEMARK OFFICE

Commissioner for Patents
United States Patent and Trademark Office
P.O. Box 1450
Alexandria, VA 22313-1450
www.uspto.gov

MAIL

DEC - 9 2004

DIRECTOR OFFICE
TECHNOLOGY CENTER 2100

TOWNSEND AND TOWNSEND AND CREW, LLP
TWO EMBARCADERO CENTER
EIGTH FLOOR
SAN FRANCISCO, CA 94111-3834

In re Application of: Mori
Application No. 10/643,624
Filed: August 18, 2003
For: STORAGE SYSTEM, CONTROL METHOD, AND MEDIUM HAVING PROGRAM RECORDED THEREON

DECISION ON PETITION FOR ACCELERATED EXAMINATION UNDER M.P.E.P.§708.02(VIII)

This is a decision on the petition filed September 1, 2004 under 37 C.F.R. 102(d) and M.P.E.P. § 708.02(VIII): Accelerated Examination, to make the above-identified application special.

The Petition is **GRANTED**.

M.P.E.P. § 708.02, Section VIII which sets out the prerequisites for a grantable petition for Accelerated Examination under 37 C.F.R. § 102(d) states in relevant part:

A new application (one which has not received any examination by the examiner) may be granted special status provided that applicant (and this term includes applicant's attorney or agent) complies with each of the following items:

(a) Submits a petition to make special accompanied by the fee set forth in **37 CFR 1.17(h)**;

(b) Presents all claims directed to a single invention, or if the Office determines that all the claims presented are not obviously directed to a single invention, will make an election without traverse as a prerequisite to the grant of special status;

(c) Submits a statement(s) that a pre-examination search was made, listing the field of search by class and subclass, publication, Chemical Abstracts, foreign patents, etc. The pre-examination search must be directed to the invention as claimed in the application for which special status is requested. A search made by a foreign patent office satisfies this requirement;

(d) Submits one copy each of the references deemed most closely related to the subject matter encompassed by the claims if said references are not already of record; and

(e) Submits a detailed discussion of the references, which discussion points out, with the particularity required by 37 CFR 1.111 (b) and (c), how the claimed subject matter is patentable over the references.

Petition to Make Special **GRANTED** since all of the requirements for special status under MPEP § 708.02(VIII) have been met.

The application file is being forwarded to the Examiner for accelerated examination in accordance with the procedures set forth in M.P.E.P. §708.02, Section VIII. If the application is subsequently allowed, it will be given priority for printing. See M.P.E.P. §1309.

Brian L. Johnson
Special Program Examiner
Technology Center 2100
Computer Architecture, Software and Information Security
571-272-3595

12/29/04

MBS

SPE RESPONSE FOR CERTIFICATE OF CORRECTION

Paper No.: _____

DATE : January 5, 2007

TO SPE OF : ART UNIT 1744

SUBJECT : Request for Certificate of Correction for Appl. No.: 10/643626 patent No.: 7,137,168

Please respond to this request for a certificate of correction within 7 days.

Please review the requested changes/corrections as shown in the **COCIN** document(s) in the IFW application image. No new matter should be introduced, nor should the scope or meaning of the claims be changed.

Please complete the response (see below) and forward the completed response to scanning using document code **COCX**.

Magdalene Talley

Certificates of Correction Branch

703-308-9390 ext. 116

Thank You For Your Assistance

The request for issuing the above-identified correction(s) is hereby:

Note your decision on the appropriate box.

- ☒ **Approved** — **All** changes apply.
- ☐ **Approved in Part** — Specify below which changes **do not** apply.
- ☐ **Denied** — State the reasons for denial below.

Comments: _____

GLADYS JP CORCORAN
SUPERVISORY PATENT EXAMINER

SPE

1744

Art Unit

UNITED STATES PATENT AND TRADEMARK OFFICE

COMMISSIONER FOR PATENTS
UNITED STATES PATENT AND TRADEMARK OFFICE
P.O. BOX 1450
ALEXANDRIA, VA 22313-1450
www.uspto.gov

COPY MAILED

SEP 26 2007

OFFICE OF PETITIONS

HOXIE & ASSOCIATES LLC
75 MAIN STREET , SUITE 301
MILLBURN NJ 07041

In re Application of :
Sundelin, et al. : DECISION ON PETITION
Application No. 10/643,627 :
Filed: August 19, 2003 :
Atty. Dkt. No.: MPI93-006CP1DV1ACN1DV1M :

This decision is in response to the petition to withdraw the holding of abandonment under 37 CFR 1.181 filed August 30, 2007 and supplemented September 7, 2007.

The petition under 37 CFR 1.181 to withdraw the holding of abandonment is hereby **DISMISSED**.

Any request for reconsideration of this decision must be submitted within **TWO (2) MONTHS** from mail date of this decision. Extensions of time under 37 CFR 1.136(a) are permitted. The reconsideration request should include a cover letter entitled "Renewed Petition under 37 CFR 1.181." This is not a final agency decision.

This application became abandoned July 12, 2007 for failure to timely submit a proper reply to the Notice of Allowance (Notice) mailed April 11, 2007. The Notice set a three month statutory period of time for reply. Notice of Abandonment was mailed August 8, 2007.

Petitioners acknowledge that the issue fee transmittal (PTOL-85b), mailed July 11, 2007, indicated that a check was enclosed. The USPTO did not receive a check and petitioners acknowledge that a check was not submitted, applicants having intended to pay the issue fee and publication fee by deposit account. Petitioners failed to indicate the deposit account to which to charge the fees on the PTOL-85b. When petitioners realized the error, petitioners contacted the UPSTO Office of Patent Publication via telephone and indicate that petitioners were verbally advised to submit a supplemental paper instructing the USPTO to charge the required fees to petitioners' deposit

account. Petitioners allegedly submitted a supplemental paper to this effect on July 12, 2007 via facsimile.

On July 25, 2007, an Issue Notification was mailed. A Patent Withdrawal Notice was mailed August 7, 2007 advising of the withdrawal of the application from issue for failure to submit the issue fee.

A status request was filed August 8, 2007. The status request also requested that petitioners' deposit account be charged $1,700.00 for the issue fee and publication fee.

The issue fee and publication fee were improperly charged to petitioners' deposit account on August 10, 2007 in response to the status request received August 8, 2007.

The supplemental petition filed September 7, 2007 requests withdrawal of the holding of abandonment on the basis that the USPTO received the issue fee and publication fee on July 11, 2007.

The issue fee and publication fee were due no later than July 11, 2007. Absent timely submission of the fees, the application became abandoned as a matter of law July 12, 2007. The USPTO is without authority to extend the period of time for submission of the issue fee and publication fee. *See*, 35 USC 151.

Petitioners acknowledge that no fee was submitted with the PTOL-85b on July 11, 2007. Petitioners allege that a request to charge the issue fee and publication fee to petitioners' deposit account was submitted July 12, 2007. A request to charge the issue fee and publication fee after the period of time for such submission has expired will not act to avoid abandonment.

The issue fee and publication fee were improperly charged to petitioners' deposit account in response to a status request submitted August 8, 2007. Late submission of the issue fee and publication fee after the period of time for submission of such will not act to avoid abandonment nor warrant a withdrawal of the holding of abandonment.

Petitioners have failed to establish that the issue fee and publication fee were **timely** submitted within three months of the mailing of the Notice of Allowance on April 11, 2007. Accordingly, the instant petition is subject to dismissal.

Petitioners allege that a request to charge the issue fee and publication fee was submitted via facsimile on July 12, 2007 in response to advice received from the Office of Patent Publication. Petitioners' are advised that reliance upon oral advice from USPTO employees, as alleged to have occurred, is not deemed unavoidable within the meaning of 37 CFR 1.137(a). *See, generally*, MPEP 711.03(c).

ALTERNATE VENUE

Petitioners are **strongly** urged to consider filing a petition stating that the delay was unintentional. Petitioners' attention is directed to 37 CFR 1.137(b) which provides for the revival of an "unintentionally" abandoned application without a showing that the delay in prosecution or in late payment of an issue fee was "unavoidable". An "unintentional" petition under 37 CFR 1.137(b) must be accompanied by the required petition fee and reply.

The filing of a petition under 37 CFR 1.137(b) cannot be intentionally delayed and therefore must be filed promptly. A person seeking revival due to unintentional delay cannot make a statement that the delay was unintentional unless the entire delay, including the delay from the date it was discovered that the application was abandoned until the filing of the petition to revive under 37 CFR 1.137(b), was unintentional. A statement that the delay was unintentional is not appropriate if petitioner intentionally delayed the filing of a petition for revival under 37 CFR 1.137(b).

Further correspondence with respect to this matter should be addressed as follows:

By mail:	**Mail Stop Petition** Commissioner for Patents P.O. Box 1450 Alexandria, VA 22313-1450
By facsimile:	(571) 273-8300
By hand delivery:	U.S. Patent and Trademark Office Customer Window, **Mail Stop Petition** Randolph Building 401 Dulany Street Alexandria, VA 22314

Telephone inquiries concerning this matter may be directed to the undersigned at (571) 272-3205.

Alesia M. Brown
Petitions Attorney
Office of Petitions

UNITED STATES PATENT AND TRADEMARK OFFICE

COMMISSIONER FOR PATENTS
UNITED STATES PATENT AND TRADEMARK OFFICE
P.O. BOX 1450
ALEXANDRIA, VA 22313-1450
www.uspto.gov

COPY MAILED

FEB 22 2008

OFFICE OF PETITIONS

HOXIE & ASSOCIATES LLC
75 MAIN STREET , SUITE 301
MILLBURN, NJ 07041

In re Application of
Johan Sundelin, et al.
Application No. 10/643,627
Filed: August 19, 2003
Docket No. MPI93-006CP1DV1ACN1DV1M

ON PETITION

This is a decision on the petition under 37 CFR 1.137(b) to revive the above-identified application, filed October 27, 2007.

The application became abandoned for failure to pay the issue fee on or before July 11, 2007. A Notice of Abandonment was mailed on August 8, 2007. On August 30, 2007 a petition under 37 CFR 1.181 was filed; however, the petition was subsequently dismissed in a decision mailed September 26, 2007. On October 27, 2007, the present petition was filed.

It is noted that the issue/publication fees were paid on August 8, 2007 and again on October 2, 2007, resulting in an overpayment of issue/publication fees of $1,740. Since the requisite $1,540 petition fee for the present petition has not been collected, the petition fee will be deducted from the $1,740 issue/publication fees paid on October 2, 2007 and the balance of $200 will be refunded to counsel's deposit account.

The petition is **GRANTED**.

The application is being referred to the Office of Data Management to be processed into a patent.

Telephone inquires related to this decision should be directed to the undersigned at (571) 272-3204. Telephone inquiries related to processing as a patent should be directed to (571) 272-4200.

Sherry D. Brinkley
Petitions Examiner
Office of Petitions

UNITED STATES PATENT AND TRADEMARK OFFICE

Commissioner for Patents
United States Patent and Trademark Office
P.O. Box 1450
Alexandria, VA 22313-1450
www.uspto.gov

Paper No.

PRESTON GATES ELLIS & ROUVELAS MEEDS LLP
1735 NEW YORK AVENUE, NW, SUITE 500
WASHINGTON DC 20006

NOV 23 2005

In re Application of:
Torbjorn Boson Lundqvist
Serial No.: 10/643,634
Filed: August 18, 2003
Attorney Docket No.: **48304-00017**

DECISION ON REQUEST TO WITHDRAW FROM RECORD

This is a decision on the request to withdraw as attorney/agent of record under 37 C.F.R. § 1.36, filed March 15, 2005.

A grantable request to withdraw as attorney of record must be signed by every attorney seeking to withdraw or contain a clear indication that one attorney is signing on behalf of others. A request to withdraw will not be approved unless at least thirty (30) days would remain between the date of approval and the later of the expiration date of a time to file a response or the expiration date of the maximum time period, which can be extended under 37 C.F.R. § 1.136(a).

The request meets all the above stated requirements. The request was signed by Louis C. Cullman on behalf of himself and all of the attorneys associated with customer number 25,204. There is at least thirty (30) days remaining between the date of approval and the later of the expiration date of a time to file a response or the expiration date of the maximum time period.

The request is **APPROVED**.

There are no attorneys of record at this time. It is noted that the application is now abandoned.

All future communications from the Office will be directed to the below address, until otherwise notified by applicant.

Inquiries related to this decision should be directed to Clayton E. LaBalle at (571) 272-1594.

Clayton E. LaBalle, Special Programs Examiner
Technology Center 2800
Semiconductors, Electrical and Optical
Systems and Components

cc: Aviation Upgrade Technologies, Inc.
6550 South Pecos Road, Suite 142
Las Vegas, NV 89102

UNITED STATES PATENT AND TRADEMARK OFFICE

UNITED STATES DEPARTMENT OF COMMERCE
United States Patent and Trademark Office
Address: COMMISSIONER FOR PATENTS
P.O. Box 1450
Alexandria, Virginia 22313-1450
www.uspto.gov

THE PROCTER & GAMBLE COMPANY
Global Legal Department - IP
Sycamore Building - 4th Floor
299 East Sixth Street
CINCINNATI, OH 45202

Mail Date: 04/21/2010

Applicant	: John D. Tanner	: DECISION ON REQUEST FOR
Patent Number	: 7615152	: RECALCULATION of PATENT
Issue Date	: 11/10/2009	: TERM ADJUSTMENT IN VIEW
Appliction No	: 10/643,669	: OF WYETH AND NOTICE OF INTENT TO
Filed	: 08/19/2003	: ISSUE CERTIFICATE OF CORRECTION
		:

The Request for Recalculation is **GRANTED** to the extent indicated.

The patent term adjustment has been determined to be **753** days. The USPTO will *sua sponte* issue a certificate of correction reflecting the amount of PTA days determined by the recalculation.

Prior to the issuance of the certificate of correction, the USPTO will afford patentee an opportunity to be heard and request reconsideration. Accordingly, patentee has **one month or thirty (30) days,** whichever is longer, to file a request for reconsideration of this patent term adjustment calculation. See 35 U.S.C. 154(b)(3)(B)(ii) and 37 CFR 1.322(a)(4). No extensions of time will be granted under 37 CFR 1.136.

Patentee should use document code PET.OP if electronically filing a request for reconsideration of this patent term adjustment calculation. The patentee must also include the information required by 37 CFR 1.705(b)(2) and the fee required by 37 CFR 1.18(e). If patentee does not file a timely request for reconsideration of this patent term adjustment calculation including the information required by 37 CFR 1.705(b)(2) and the fee required by 37 CFR 1.18(e), the USPTO will issue a certificate of correction reflecting the PTA determination noted above.

Patentee should be aware that in order to preserve the right to review in the United States District Court for the District of Columbia of the USPTO patent term adjustment determination, patentee must ensure that he or she also take the steps required under 35 U.S.C. 154(b)(4)(A) in a timely manner. Nothing in the request for recalculation should be construed as providing an alternative time frame for commencing a civil action under 35 U.S.C. 154(b)(4)(A).

Any questions concerning this decision should be directed to the Office of Patent Legal Administration at 571-272-7702.

UNITED STATES PATENT AND TRADEMARK OFFICE

COMMISSIONER FOR PATENTS
UNITED STATES PATENT AND TRADEMARK OFFICE
P.O. BOX 1450
ALEXANDRIA, VA 22313-1450
www.uspto.gov

TROP PRUNER & HU, PC
1616 S. VOSS ROAD, SUITE 750
HOUSTON TX 77057-2631

COPY MAILED

MAR 2 8 2007

OFFICE OF PETITIONS

Applicant: Ray et al.
Appl. No.: 10/643,672
Filing Date: August 19, 2003
Title: ENABLING CONTENT-BASED SEARCH OF OBJECTS IN AN IMAGE DATABASE WITH REDUCED MATCHING
Attorney Docket No.: ITL.0996US (P14028)
Pub. No.: US 2005/0041863 A1
Pub. Date: February 24, 2005

This is a decision on the request for corrected of patent application publication under 37 CFR 1.221(b), received on October 16, 2006, for the above-identified application.

The request is DISMISSED.

The instant request is that the application be republished because the patent application publication contains a material error, as the patent application publication improperly includes the contents of another application that was submitted as part of an information disclosure statement.

37 CFR 1.221 (b) is applicable "only when the Office makes a material mistake which is apparent from Office records.... Any request for a corrected publication or revised patent application publication other than provided as provided in paragraph (a) of this section must be filed **within two months** from the date of the patent application publication. This period is not extendable." A material mistake must affect the public's ability to appreciate the technical disclosure of the patent application publication, to determine the scope of the patent application publication, or to determine the scope of the provisional rights that an applicant may seek to enforce upon issuance of a patent. [1]

The request for corrected publication received on October 16, 2006, was not timely filed under 37 CFR 1.221(b).

The patent application publication was published with the contents of another application. Due to the nature of the errors in this publication, the office will *sua sponte* publish a corrected patent

[1] Changes to Implement Eighteen-Month Publication of Patent Applications, 65 FR 57023, 57038 (Sept. 20, 2000), 1239, Off. Gaz. Pat. Office Notices 63, 75 (Oct. 10, 2000) (final rule).

application publication. The corrected patent application publication will be published in due course, unless the application is allowed and the patent issues before the application is republished.

It would greatly benefit the Office if **applicant did not provide copies of papers**, which were previously submitted, as it unnecessarily increases the cost to the Office. See 37 CFR 1.4(b). A request for corrected publication need only point out what was printed incorrectly in the application, where the error occurs in the publication and where the correct text or drawing is found in the application papers. Marked up relevant copies of the applications papers and the pre-grant publication may facilitate processing of the request, where it is not readily apparent where the error occurs. If it is not clear why the error is a material error, further explanation may be warranted.

Inquiries relating to this matter may be directed to Mark Polutta at (571) 272-7709 (voice).

Mark O. Polutta
Senior Legal Advisor
Office of Patent Legal Administration
Office of the Deputy Commissioner
for Patent Examination Policy

SPE RESPONSE FOR CERTIFICATE OF CORRECTION

Paper No.: _____

DATE : 10-31-08

TO SPE OF : ART UNIT 1639

SUBJECT : Request for Certificate of Correction for Appl. No.: 10/643651 Patent No.: 7407934

Please respond to this request for a certificate of correction within 7 days.

FOR IFW FILES:

Please review the requested changes/corrections as shown in the **COCIN** document(s) in the IFW application image. No new matter should be introduced, nor should the scope or meaning of the claims be changed.

Please complete the response (see below) and forward the completed response to scanning using document code **COCX**.

FOR PAPER FILES:

Please review the requested changes/corrections as shown in the attached certificate of correction. Please complete this form (see below) and forward it with the file to:

Certificates of Correction Branch (CofC)
South Tower - 9A22
Palm Location 7580

Should My Claims be entered?

E. Low
Certificates of Correction Branch
703-308-9390 ext. _____

Thank You For Your Assistance

The request for issuing the above-identified correction(s) is hereby:

Note your decision on the appropriated box.

☒ **Approved**	All changes apply.
☐ **Approved in Part**	Specify below which changes **do not** apply.
☐ **Denied**	State the reasons for denial below.

Comments:

/ Christopher S. F. Low /
Supervisory Patent Examiner, Art Unit 1636

SPE RESPONSE FOR CERTIFICATE OF CORRECTION

UNITED STATES PATENT AND TRADEMARK OFFICE

Commissioner for Patents
United States Patent and Trademark Office
P.O. Box 1450
Alexandria, VA 22313-1450
www.uspto.gov

RICHARD LACAVA
DICKSTEIN SHAPIRO MORIN &
OSHINSKY LLP
1177 AVENUE OF THE AMERICAS, 41ST FLOOR
NEW YORK, NY 10036-2714

COPY MAILED

JUL 11 2005

OFFICE OF PETITIONS

In re Application of :
Seiji Hidaka et al :
Application No. 10/643,692 : ON PETITION
Filed: August 18, 2003 :
Attorney Docket No. M1071.1850/P1850

This is a decision on the petition, filed July 8, 2005 under 37 CFR 1.313(c)(2), to withdraw the above-identified application from issue after payment of the issue fee.

The petition is **GRANTED**.

The above-identified application is withdrawn from issue for consideration of a submission under 37 CFR 1.114 (request for continued examination). See 37 CFR 1.313(c)(2).

Petitioner is advised that the issue fee paid on June 16, 2005 in the above-identified application cannot be refunded. If, however, the above-identified application is again allowed, petitioner may request that it be applied towards the issue fee required by the new Notice of Allowance.[1]

Telephone inquiries should be directed to Irvin Dingle at (571) 272-3210.

This matter is being referred to Technology Center AU 2817 for processing of the request for continued examination under 37 CFR 1.114 and for consideration of the concurrently filed Information Disclosure Statement.

Irvin Dingle
Petitions Examiner
Office of Petitions
Office of the Deputy Commissioner
for Patent Examination Policy

[1] The request to apply the issue fee to the new Notice may be satisfied by completing and returning the new Issue Fee Transmittal Form PTOL-85(b), which includes the following language thereon: Commissioner for Patents is requested to apply the Issue Fee and Publication Fee (if any) or re-apply any previously paid issue fee to the application identified above. Petitioner is advised that, whether a fee is indicated as being due or not, the Issue Fee Transmittal Form **must** be completed and timely submitted to avoid abandonment. Note the language in bold text on the first page of the Notice of Allowance and Fee(s) Due (PTOL-85).

UNITED STATES PATENT AND TRADEMARK OFFICE

Commissioner for Patents
United States Patent and Trademark Office
P.O. Box 1450
Alexandria, VA 22313-1450
www.uspto.gov

Richard LaCava
DICKSTEIN SHAPIRO MORIN & OSHINSKY LLP
41st Floor
1177 Avenue of the Americas
New York NY 10036-2714

COPY MAILED

JUL 13 2006

OFFICE OF PETITIONS

In re Application of :
HIDAKA, SEIJI et al :
Application No. 10/643,692 : DECISION ON PETITION
Filed: August 18, 2003 : UNDER 37 CFR 1.55(c)
Attorney Docket No. M1071.1850/P1850 :

This is a decision on the petition under 37 CFR 1.55(c), filed August 26, 2005, to accept an unintentionally delayed claim under 35 U.S.C. § 119(a)-(d) for benefit of priority to the filing date of foreign Japanese Application No. 2002-334226 filed November 18, 2002 and Japanese Application No. 2002-363359 filed December 16, 2002,

The petition is **GRANTED**.

This application was filed after November 29, 2000, and did not include a reference to the foreign applications, for which benefit is now sought, within the later of four months from the actual filing date of the application or sixteen months from the filing date of the prior foreign applications. Since the claim for priority is submitted after the period specified in 37 CFR 1.55(a)(1)(i), this is an appropriate petition under the provisions of 37 CFR 1.55(c).

A petition under 37 CFR 1.55(c) to accept an unintentionally delayed claim for priority requires:

(1) The nonprovisional application claiming the benefit of an earlier filing date must be filed on or after November 29, 2000;
(2) the claim submitted with the petition must identify the prior foreign application for which priority is claimed, as well as any foreign application for the same subject matter and having a filing date before that of the application for which priority is claimed, by the application number, country, and the filing date, **and be included either in an oath or declaration (37 CFR 1.63(c)(2)) or in an Application Data Sheet (37 CFR 1.76(b)(6))**;
(3) the surcharge as set forth in 37 CFR 1.17(t);
(4) a statement that the entire delay between the date the claim was due under 37 CFR 1.55(a)(1) and the date the claim was filed was unintentional (the Director

may require additional information where there is a question whether the delay was unintentional); and

(5) the above-identified nonprovisional application must be filed within 12 months of the filing date of the foreign application.

This application was filed on August 18, 2003, which is after November 29, 2000 and within 12 months of November 18, 2002 and December 16, 2002 (the filing dates of the foreign applications to which benefit is now being claimed). On August 26, 2005, an executed oath/declaration was received which identifies the foreign applications for which priority is claimed by application number, country and filing date. The required petition fee of $1,370 was received with the petition. Lastly, petitioner has provided an adequate statement of unintentional delay.

All of the above requirements having been satisfied, the late claim for priority under 35 U.S.C. § 119(a)-(d) is accepted as being unintentionally delayed.

The granting of the petition to accept the delayed benefit claim to the prior-filed applications under 37 CFR 1.55(c) should not be construed as meaning that this application is entitled to the benefit of the prior-filed applications. In order for this application to be entitled to the benefit of the prior-filed applications, all other requirements under 35 U.S.C. § 119(a)-(d) and 37 CFR 1.55(a)(1) must be met. Similarly, the fact that the corrected Filing Receipt accompanying this decision on petition includes the prior-filed applications should not be construed as meaning that applicant is entitled to the claim for benefit of priority to the prior-filed applications noted thereon. Accordingly, the examiner will, in due course, consider this benefit claim and determine whether this application is entitled to the benefit of the earlier filing date.

A corrected Filing Receipt, which includes the priority claim to the prior-filed foreign applications, accompanies this decision on petition.

This application matured into Patent No. 6,943,644 on September 13, 2005. It is noted that the claim for benefit of priority to the above-noted foreign applications appears on the front page of the Letters Patent. Accordingly, this case does not require any further action.

Any questions concerning this matter may be directed to Amelia Au at (571) 272-7414.

Frances Hicks
Lead Petitions Examiner
Office of Petitions

ATTACHMENT: Corrected Filing Receipt

UNITED STATES PATENT AND TRADEMARK OFFICE

UNITED STATES DEPARTMENT OF COMMERCE
United States Patent and Trademark Office
Address: COMMISSIONER FOR PATENTS
P.O. Box 1450
Alexandria, Virginia 22313-1450
www.uspto.gov

APPL NO.	FILING OR 371 (c) DATE	ART UNIT	FIL FEE REC'D	ATTY.DOCKET NO	DRAWINGS	TOT CLMS	IND CLMS
10/643,692	08/18/2003	2817	1050	M1071.1850/P1850	20	16	1

CONFIRMATION NO. 5092

Richard LaCava
DICKSTEIN SHAPIRO MORIN & OSHINSKY LLP
41st Floor
1177 Avenue of the Americas
New York, NY 10036-2714

CORRECTED FILING RECEIPT

OC000000019496184

Date Mailed: 07/06/2006

Receipt is acknowledged of this regular Patent Application. It will be considered in its order and you will be notified as to the results of the examination. Be sure to provide the U.S. APPLICATION NUMBER, FILING DATE, NAME OF APPLICANT, and TITLE OF INVENTION when inquiring about this application. Fees transmitted by check or draft are subject to collection. Please verify the accuracy of the data presented on this receipt. **If an error is noted on this Filing Receipt, please mail to the Commissioner for Patents P.O. Box 1450 Alexandria Va 22313-1450. Please provide a copy of this Filing Receipt with the changes noted thereon. If you received a "Notice to File Missing Parts" for this application, please submit any corrections to this Filing Receipt with your reply to the Notice. When the USPTO processes the reply to the Notice, the USPTO will generate another Filing Receipt incorporating the requested corrections (if appropriate).**

Applicant(s)

Seiji Hidaka, Nagaokakyo-shi, JAPAN;
Shin Abe, Muko-shi, JAPAN;

Power of Attorney: The patent practitioners associated with Customer Number **32172**.

Domestic Priority data as claimed by applicant

This application is a CON of PCT/JP02/13181 12/17/2002

Foreign Applications

JAPAN 2001-384879 12/18/2001
JAPAN 2002-334226 11/18/2002
JAPAN 2002-363359 12/16/2002

If Required, Foreign Filing License Granted: 09/17/2003

The country code and number of your priority application, to be used for filing abroad under the Paris Convention, is US10/643,692

Projected Publication Date: Not Applicable

Non-Publication Request: No

Early Publication Request: No

Title

RESONATOR, FILTER, DUPLEXER, AND COMMUNICATION APPARATUS

Preliminary Class

333

PROTECTING YOUR INVENTION OUTSIDE THE UNITED STATES

Since the rights granted by a U.S. patent extend only throughout the territory of the United States and have no effect in a foreign country, an inventor who wishes patent protection in another country must apply for a patent in a specific country or in regional patent offices. Applicants may wish to consider the filing of an international application under the Patent Cooperation Treaty (PCT). An international (PCT) application generally has the same effect as a regular national patent application in each PCT-member country. The PCT process **simplifies** the filing of patent applications on the same invention in member countries, but **does not result** in a grant of "an international patent" and does not eliminate the need of applicants to file additional documents and fees in countries where patent protection is desired.

Almost every country has its own patent law, and a person desiring a patent in a particular country must make an application for patent in that country in accordance with its particular laws. Since the laws of many countries differ in various respects from the patent law of the United States, applicants are advised to seek guidance from specific foreign countries to ensure that patent rights are not lost prematurely.

Applicants also are advised that in the case of inventions made in the United States, the Director of the USPTO must issue a license before applicants can apply for a patent in a foreign country. The filing of a U.S. patent application serves as a request for a foreign filing license. The application's filing receipt contains further information and guidance as to the status of applicant's license for foreign filing.

Applicants may wish to consult the USPTO booklet, "General Information Concerning Patents" (specifically, the section entitled "Treaties and Foreign Patents") for more information on timeframes and deadlines for filing foreign patent applications. The guide is available either by contacting the USPTO Contact Center at 800-786-9199, or it can be viewed on the USPTO website at http://www.uspto.gov/web/offices/pac/doc/general/index.html.

For information on preventing theft of your intellectual property (patents, trademarks and copyrights), you may wish to consult the U.S. Government website, http://www.stopfakes.gov. Part of a Department of Commerce initiative, this website includes self-help "toolkits" giving innovators guidance on how to protect intellectual property in specific countries such as China, Korea and Mexico. For questions regarding patent enforcement issues, applicants may call the U.S. Government hotline at 1-866-999-HALT (1-866-999-4158).

LICENSE FOR FOREIGN FILING UNDER
Title 35, United States Code, Section 184
Title 37, Code of Federal Regulations, 5.11 & 5.15

GRANTED

The applicant has been granted a license under 35 U.S.C. 184, if the phrase "IF REQUIRED, FOREIGN FILING LICENSE GRANTED" followed by a date appears on this form. Such licenses are issued in all applications where the conditions for issuance of a license have been met, regardless of whether or not a license may be required as set forth in 37 CFR 5.15. The scope and limitations of this license are set forth in 37 CFR 5.15(a) unless an earlier license has been issued under 37 CFR 5.15 (b). The license is subject to revocation upon written notification. The date indicated is the effective date of the license, unless an earlier license of similar scope has been granted under 37 CFR 5.13 or 5.14.

This license is to be retained by the licensee and may be used at any time on or after the effective date thereof unless it is revoked. This license is automatically transferred to any related applications(s) filed under 37 CFR 1.53(d). This license is not retroactive.

The grant of a license does not in any way lessen the responsibility of a licensee for the security of the subject matter as imposed by any Government contract or the provisions of existing laws relating to espionage and the national security or the export of technical data. Licensees should apprise themselves of current regulations especially with respect to certain countries, of other agencies, particularly the Office of Defense Trade Controls, Department of State (with respect to Arms, Munitions and Implements of War (22 CFR 121-128)); the Bureau of Industry and Security, Department of Commerce (15 CFR parts 730-774); the Office of Foreign Assets Control, Department of Treasury (31 CFR Parts 500+) and the Department of Energy.

NOT GRANTED

No license under 35 U.S.C. 184 has been granted at this time, if the phrase "IF REQUIRED, FOREIGN FILING LICENSE GRANTED" DOES NOT appear on this form. Applicant may still petition for a license under 37 CFR 5.12, if a license is desired before the expiration of 6 months from the filing date of the application. If 6 months has lapsed from the filing date of this application and the licensee has not received any indication of a secrecy order under 35 U.S.C. 181, the licensee may foreign file the application pursuant to 37 CFR 5.15(b).

UNITED STATES PATENT AND TRADEMARK OFFICE

Commissioner for Patents
United States Patent and Trademark Office
P.O. Box 1450
Alexandria, VA 22313-1450
www.uspto.gov

COPY MAILED

JUL 03 2007

OFFICE OF PETITIONS

SCHWEGMAN, LUNDBERG, WOESSNER & KLUTH, P.A.
P.O. BOX 2938
MINNEAPOLIS MN 55402

In re Application of :
James R. Kohn :
Application No. 10/643,727 : ON PETITION
Filed: August 18, 2003 :
Attorney Docket No. 1376.731US1 :

This is a decision on the petition, filed July 2, 2007, under 37 CFR 1.313(c)(2) to withdraw the above-identified application from issue after payment of the issue fee.

The petition is **GRANTED**.

The above-identified application is withdrawn from issue for consideration of a submission under 37 CFR 1.114 (request for continued examination). See 37 CFR 1.313(c)(2).

Petitioner is advised that the issue fee paid on May 29, 2007 in the above-identified application cannot be refunded. If, however, the above-identified application is again allowed, petitioner may request that it be applied towards the issue fee required by the new Notice of Allowance.[1]

Telephone inquiries should be directed to the undersigned at (571) 272-3208.

The examiner of Technology Center AU 2183 will consider the request for continued examination under 37 CFR 1.114.

Karen Creasy

Karen Creasy
Petitions Examiner
Office of Petitions

[1] The request to apply the issue fee to the new Notice may be satisfied by completing and returning the new Issue Fee Transmittal Form PTOL-85(b), which includes the following language thereon: "Commissioner for Patents is requested to apply the Issue Fee and Publication Fee (if any) or re-apply any previously paid issue fee to the application identified above." Petitioner is advised that, whether a fee is indicated as being due or not, the Issue Fee Transmittal Form **must** be completed and timely submitted to avoid abandonment. Note the language in bold text on the first page of the Notice of Allowance and Fee(s) Due (PTOL-85).

UNITED STATES PATENT AND TRADEMARK OFFICE

Commissioner for Patents
United States Patent and Trademark Office
P.O. Box 1450
Alexandria, VA 22313-1450
www.uspto.gov

COPY MAILED

JAN 1 1 2008

OFFICE OF PETITIONS

COX SMITH MATHEWS INCORPORATED
112 EAST PECAN STREET,
SUITE 1800
SAN ANTONIO TX 78205-1521

In re Application of	:	
Richard J. HICKEY, JR.	:	
Application No. 10/643,729	:	DECISION ON PETITION
Filed: August 19, 2003	:	TO WITHDRAW
Attorney Docket No. 505/1	:	FROM RECORD
	:	

This is a decision on the Request to Withdraw as attorney or agent of record under 37 C.F.R. § 1.36(b), filed February 28, 2007.

The request is **APPROVED**.

A grantable request to withdraw as attorney/agent of record must be signed by every attorney/agent seeking to withdraw or contain a clear indication that one attorney is signing on behalf of another/others. A request to withdraw will not be approved unless at least 30 (thirty) days would remain between the date of approval and the later of the expiration date of a time to file a response or the expiration date of the maximum time period which can be extended under 37 C.F.R. § 1.136(a).

The request was signed by Sean Liam Kelleher on behalf of all attorneys/agents of record.

All attorneys/agents of record have been withdrawn.

Applicant is reminded that there is no attorney of record at this time.

The request to change the correspondence of record is not acceptable as the requested correspondence address is not that of: (1) the first named signing inventor; or (2) an intervening assignee of the entire interest under 37 C.F.R 3.71. All future communications from the Office will be directed to the inventor at the first copied address below until otherwise properly notified by the applicant.

In order to request or take action in a patent matter, the assignee must establish its ownership of the patent to the satisfaction of the Director. In this regard, a Statement under 37 CFR 3.73(b) must have either: (i) documentary evidence of a chain of title from the original owner to the assignee (*e.g.*, copy of an executed assignment), and a statement affirming that the documentary evidence of the chain of title from the original owner to the assignee was or concurrently is being submitted for recordation pursuant to § 3.11; or (ii) a statement specifying where documentary evidence of a chain of title from the original owner to the assignee is recorded in the assignment records of the Office (*e.g.*, reel and frame number).

There are no outstanding Office actions pending at the present time.

Telephone inquiries concerning this decision should be directed to the undersigned at 571-272-6735.

Diane Goodwyn
Petitions Examiner
Office of Petitions

cc: RICHARD J. HICKEY, JR.
2172 WHITE BIRCH DR.,
YORKTOWN HEIGHTS, NY 10598

cc: COX SMITH MATTHEWS INCORPORATED
INTELLECTUAL PROPERTY LAW DEPT.
112 EAST PECAN STREET, SUITE 1800
SAN ANTONIO, TX 78205

UNITED STATES PATENT AND TRADEMARK OFFICE

UNITED STATES DEPARTMENT OF COMMERCE
United States Patent and Trademark Office
Address: COMMISSIONER FOR PATENTS
P.O. Box 1450
Alexandria, Virginia 22313-1450
www.uspto.gov

APPLICATION NUMBER	FILING OR 371(C) DATE	FIRST NAMED APPLICANT	ATTY. DOCKET NO./TITLE
10/643,729	08/19/2003	Richard J. Hickey JR.	22187.4813

CONFIRMATION NO. 4684

POWER OF ATTORNEY NOTICE

716
COX SMITH MATTHEWS INCORPORATED
112 EAST PECAN STREET, SUITE 1800
SAN ANTONIO, TX 78205-1521

Date Mailed: 01/11/2008

NOTICE REGARDING CHANGE OF POWER OF ATTORNEY

This is in response to the Power of Attorney filed 02/28/2007.

- The withdrawal as attorney in this application has been accepted. Future correspondence will be mailed to the new address of record. 37 CFR 1.33.

/dcgoodwyn/

Office of Initial Patent Examination (571) 272-4000 or 1-800-PTO-9199

SPE RESPONSE FOR CERTIFICATE OF CORRECTION

Paper No.: _____

DATE : 01/15/09

TO SPE OF : ART UNIT 2185

SUBJECT : Request for Certificate of Correction for Appl. No.: 10643741 Patent No.: 7437521 B1

Please respond to this request for a certificate of correction within 7 days.

FOR IFW FILES:

Please review the requested changes/corrections as shown in the **COCIN** document(s) in the IFW application image. No new matter should be introduced, nor should the scope or meaning of the claims be changed.

Please complete the response (see below) and forward the completed response to scanning using document code **COCX**.

FOR PAPER FILES:

Please review the requested changes/corrections as shown in the attached certificate of correction. Please complete this form (see below) and forward it with the file to:

Certificates of Correction Branch (CofC)
South Tower - 9A22
Palm Location 7580
You can fax the Directors/SPE response to 571-270-9990

_____
Certificates of Correction Branch
703-308-9390 ext. _____

Thank You For Your Assistance

The request for issuing the above-identified correction(s) is hereby:
Note your decision on the appropriate box.

☐ **Approved**	**All** changes apply.
☒ **Approved in Part**	Specify below which changes **do not** apply.
☐ **Denied**	State the reasons for denial below.

Comments: The change requested to col. 73, line 28, in claim 7 adds an extra/unneeded "and" to the claim, therefore, that change is not approved. The change requested to col. 73, line 36, in claim 7 should instead be directed to the previous line (i.e. line 35), therefore, that change is not approved. The change requested to col. 73, line 37, in claim 7 should instead be directed the previous line (i.e. line 36), therefore, that change is not approved. All the other changes requested do not effect the scope of the specification and/or claims and are therefore approved. /AS/_____

SPE RESPONSE FOR CERTIFICATE OF CORRECTION

SANJIV SHAH
SUPERVISORY PATENT EXAMINER
TECHNOLOGY CENTER 2100

SPE Art Unit 2185

UNITED STATES PATENT AND TRADEMARK OFFICE

UNITED STATES DEPARTMENT OF COMMERCE
United States Patent and Trademark Office
Address: COMMISSIONER FOR PATENTS
P.O. Box 1450
Alexandria, Virginia 22313-1450
www.uspto.gov

SCHWEGMAN, LUNDBERG & WOESSNER, P.A.
P.O. BOX 2938
MINNEAPOLIS, MN 55402

Mail Date: 04/20/2010

Applicant	: Kitrick Sheets	: DECISION ON REQUEST FOR
Patent Number	: 7577816	: RECALCULATION of PATENT
Issue Date	: 08/18/2009	: TERM ADJUSTMENT IN VIEW
Appliction No	: 10/643,758	: OF WYETH AND NOTICE OF INTENT TO
Filed	: 08/18/2003	: ISSUE CERTIFICATE OF CORRECTION
		:

The Request for Recalculation is **GRANTED** to the extent indicated.

The patent term adjustment has been determined to be **162** days. The USPTO will *sua sponte* issue a certificate of correction reflecting the amount of PTA days determined by the recalculation.

Prior to the issuance of the certificate of correction, the USPTO will afford patentee an opportunity to be heard and request reconsideration. Accordingly, patentee has **one month or thirty (30) days**, whichever is longer, to file a request for reconsideration of this patent term adjustment calculation. See 35 U.S.C. 154(b)(3)(B)(ii) and 37 CFR 1.322(a)(4). No extensions of time will be granted under 37 CFR 1.136.

Patentee should use document code PET.OP if electronically filing a request for reconsideration of this patent term adjustment calculation. The patentee must also include the information required by 37 CFR 1.705(b)(2) and the fee required by 37 CFR 1.18(e). If patentee does not file a timely request for reconsideration of this patent term adjustment calculation including the information required by 37 CFR 1.705(b)(2) and the fee required by 37 CFR 1.18(e), the USPTO will issue a certificate of correction reflecting the PTA determination noted above.

Patentee should be aware that in order to preserve the right to review in the United States District Court for the District of Columbia of the USPTO patent term adjustment determination, patentee must ensure that he or she also take the steps required under 35 U.S.C. 154(b)(4)(A) in a timely manner. Nothing in the request for recalculation should be construed as providing an alternative time frame for commencing a civil action under 35 U.S.C. 154(b)(4)(A).

Any questions concerning this decision should be directed to the Office of Patent Legal Administration at 571-272-7702.

SCANI **Please forward case and paper to address shown below.**

SPE RESPONSE FOR CERTIFICATE OF CORRECTION

Paper No.: _____

DATE : 8/16/07

TO SPE OF : ART UNIT 2616 ChaN Wing F (spe)

SUBJECT : Request for Certificate of Correction for Appl. No.: 10/643792 Patent No.: 6940875

Please respond to this request for a certificate of correction within 7 days.

Please review the requested changes/corrections as shown in the attached certificate of correction. Please complete this form (see below) and forward it with the file to:

Certificates of Correction Branch (CofC)
South Tower - 9A22
Palm Location 7580

HENRY RANDALL
Certificates of Correction Branch
703-308-9390 ext. _____

Thank You For Your Assistance

The request for issuing the above-identified correction(s) is hereby:

Note your decision on the appropriate box.

☒ Approved	All changes apply.
☐ Approved in Part	Specify below which changes do not apply.
☐ Denied	State the reasons for denial below.

Comments: _____

JOHN PEZZLO
PRIMARY EXAMINER

JAY K. PATEL
SUPERVISORY PATENT EXAMINER

2619

SPE Art Unit

OIPE
JAN 20 2006
PATENT & TRADEMARK OFFICE

cofc

PATENT

IN THE UNITED STATES PATENT AND TRADEMARK OFFICE

In the **PATENT** of:

Mesecher et al.

Patent No.: 6,940,875

Issued: September 6, 2005

Appln. No.: 10/643,792

Filed: August 19, 2003

For: CONTINUOUSLY ADJUSTED-BANDWIDTH DISCRETE-TIME PHASE-LOCKED LOOP

Our File: I-2-0097.3US

Date: January 18, 2006

Certificate
JAN 24 2006
of Correction

REQUEST FOR CERTIFICATE OF CORRECTION

Commissioner for Patents
P.O. Box 1450
Alexandria, VA 22313-1450

Sir:

A Certificate of Correction under 35 U.S.C. §§ 254, 255 and 37 C.F.R. §§1.322, 1.323 is requested for U.S. Patent No. 6,940,875. Correction of the following errors is requested.

ON THE TITLE PAGE

At section (57), line 1, before the word "for", delete "reciever" and insert therefor --receiver--.

IN THE SPECIFICATION

At column 2, line 13, after the word "a", delete "B-CDMATM" and insert therefor --B-CDMA™--.

At column 2, line 40, after the word "present", delete "inventor" and insert therefor --invention--.

01/20/2006 HNGUYEN1 00000078 090435 6940875
01 FC:1811 100.00 DA

JAN 25 2006

At column 5, line 53, after the word "mixer", delete "122" and insert therefor --110--.

At column 5, line 67, equation 2, delete "m=$\sqrt{(I^{2+Q^2})}$" and insert therefor -- m=$\sqrt{I^2+Q^2}$ --.

At column 9, line 55, after the word "The", delete "anaysis" and insert therefor --analysis--.

IN THE CLAIMS

In claim 24, at column 12, line 42, after the word "response", insert --to--.

IN THE DRAWINGS

Please replace Figures 2-5 and 11 with replacement Figures 2-5 and 11 attached hereto.

REMARKS

The replacement of figures 2-5 and 11 is respectfully requested. These figures were originally filed in an amendment on February 22, 2005. However, the printed Patent 6,940,875 did not include the replaced drawings. In Figure 2, the reference numeral for the base station was changed to 4 to be consistent with the specification.

JAN 25 2006

In Figure 3, the reference numeral pointers for the data signal 46, the filter parameters 45, and the despread pilot signal 30 have been changed to be consistent with the specification.

In Figure 4, one of the two elements labeled 80.1 was changed to 80.i to be consistent with the specification. Also, an extraneous reference number 84 has been removed and pointers for the reference numerals 84, 100, 88, 90, 92 were added.

In Figure 5, the phrase "CORRECTION SIGNAL" was deleted.

In Figure 11, reference numeral 182 has been added.

Patentees believe that the above errors are of such a nature as to justify the issuance of a Certificate of Correction. Patentees have enclosed a completed Certificate of Correction Form PTO/SB/44. Please charge the surcharge fee of $100 to the Deposit Account of InterDigital Communications Corporation, Deposit Account No. 09-0435.

Patentees respectfully request that the Certificate of Correction be issued.

Respectfully submitted,

Mesecher et al.

By_____
Randolph J. Huis
Registration No. 34,626
(215) 568-6400

Volpe and Koenig, P.C.
United Plaza, Suite 1600
30 South 17th Street
Philadelphia, PA 19103
RJH/HV/dmm
Enclosures

JAN 25 2006

OIPE JAN 20 2006 PATENT & TRADEMARK OFFICE

PTO/SB/21 (09-04)
Approved for use through 07/31/2006.
U.S. Patent and Trademark Office; U.S. DEPARTMENT OF COMMERCE
Under the Paperwork Reduction Act of 1995, no persons are required to respond to a collection of information unless it displays a valid OMB control number.

TRANSMITTAL FORM

(to be used for all correspondence after initial filing)

Total Number of Pages in This Submission

Patent Number	6,940,875
Issue Date	September 6, 2005
First Named Inventor	Mesecher et al.
Application Number	10/643,792
Filing Date	August 19, 2003
Attorney Docket Number	I-2-0097.3US

ENCLOSURES *(Check all that apply)*

- ☐ Fee Transmittal Form
  - ☐ Fee Attached
- ☐ Amendment/Reply
  - ☐ After Final
  - ☐ Affidavits/declaration(s)
- ☐ Extension of Time Request
- ☐ Express Abandonment Request
- ☐ Information Disclosure Statement
- ☐ Certified Copy of Priority Document(s)
- ☐ Reply to Missing Parts/ Incomplete Application
  - ☐ Reply to Missing Parts under 37 CFR 1.52 or 1.53
- ☒ Drawing(s)
- ☐ Licensing-related Papers
- ☐ Petition
- ☐ Petition to Convert to a Provisional Application
- ☐ Power of Attorney, Revocation Change of Correspondence Address
- ☐ Terminal Disclaimer
- ☐ Request for Refund
- ☐ CD, Number of CD(s) _____
  - ☐ Landscape Table on CD
- ☐ After Allowance Communication to TC
- ☐ Appeal Communication to Board of Appeals and Interferences
- ☐ Appeal Communication to TC **(Appeal Notice, Brief, Reply Brief)**
- ☐ Proprietary Information
- ☐ Status Letter
- ☒ Other Enclosure(s) (please Identify below):

Request for Certificate of Correction; Form PTO/SB/44

Remarks

SIGNATURE OF APPLICANT, ATTORNEY, OR AGENT

Firm Name	VOLPE AND KOENIG, P.C.		
Signature			
Printed name	Randolph J. Huis		
Date	1/18/2006	Reg. No.	34,626

CERTIFICATE OF TRANSMISSION/MAILING

I hereby certify that this correspondence is being facsimile transmitted to the USPTO or deposited with the United States Postal Service with sufficient postage as first class mail in an envelope addressed to: Commissioner for Patents, P.O. Box 1450, Alexandria, VA 22313-1450 on the date shown below:

Signature			
Typed or printed name	Randolph J. Huis	Date	1/18/2006

This collection of information is required by 37 CFR 1.5. The information is required to obtain or retain a benefit by the public which is to file (and by the USPTO to process) an application. Confidentiality is governed by 35 U.S.C. 122 and 37 CFR 1.11 and1.14. This collection is estimated to 2 hours to complete, including gathering, preparing, and submitting the completed application form to the USPTO. Time will vary depending upon the individual case. Any comments on the amount of time you require to complete this form and/or suggestions for reducing this burden, should be sent to the Chief Information Officer, U.S. Patent and Trademark Office, U.S. Department of Commerce, P.O. Box 1450, Alexandria, VA 22313-1450. DO NOT SEND FEES OR COMPLETED FORMS TO THIS ADDRESS. **SEND TO: Commissioner for Patents, P.O. Box 1450, Alexandria, VA 22313-1450.**

If you need assistance in completing the form, call 1-800-PTO-9199 and select option 2.

JAN 25 2006

PTO/SB/44 (04-05)
Approved for use through 04/30/2007.
U.S. Patent and Trademark Office; U.S. DEPARTMENT OF COMMERCE
Under the Paperwork Reduction Act of 1995, no persons are required to respond to a collection of information unless it displays a valid OMB control number.
(Also Form PTO-1050)

UNITED STATES PATENT AND TRADEMARK OFFICE
CERTIFICATE OF CORRECTION

PATENT NO. : 6,940,875
APPLICATION NO.: 10/643,792
ISSUE DATE : September 6, 2005
INVENTOR(S) : Mesecher et al.

It is certified that an error appears or errors appear in the above-identified patent and that said Letters Patent is hereby corrected as shown below:

ON THE TITLE PAGE

At section (57), line 1, before the word "for", delete "reciever" and insert therefor --receiver--.

IN THE SPECIFICATION

At column 2, line 13, after the word "a", delete "B-CDMATM" and insert therefor --B-CDMA™--.

At column 2, line 40, after the word "present", delete "inventor" and insert therefor --invention--.

At column 5, line 53, after the word "mixer", delete "122" and insert therefor --110--.

At column 5, line 67, equation 2, delete "m=$\sqrt{(I^{2+Q^2}}$)" and insert therefor

MAILING ADDRESS OF SENDER (Please do not use customer number below):
Volpe and Koenig, P.C.
United Plaza, Suite 1600
30 South 17th Street
Philadelphia, PA 19103

This collection of information is required by 37 CFR 1.322, 1.323, and 1.324. The information is required to obtain or retain a benefit by the public which is to file (and by the USPTO to process) an application. Confidentiality is governed by 35 U.S.C. 122 and 37 CFR 1.14. This collection is estimated to take 1.0 hour to complete, including gathering, preparing, and submitting the completed application form to the USPTO. Time will vary depending upon the individual case. Any comments on the amount of time you require to complete this form and/or suggestions for reducing this burden, should be sent to the Chief Information Officer, U.S. Patent and Trademark Office, U.S. Department of Commerce, P.O. Box 1450, Alexandria, VA 22313-1450. DO NOT SEND FEES OR COMPLETED FORMS TO THIS ADDRESS. SEND TO: Attention Certificate of Corrections Branch, Commissioner for Patents, P.O. Box 1450, Alexandria, VA 22313-1450.

If you need assistance in completing the form, call 1-800-PTO-9199 and select option 2.

JAN 25 2006

PTO/SB/44 (04-05)
Approved for use through 04/30/2007.
U.S. Patent and Trademark Office; U.S. DEPARTMENT OF COMMERCE
Under the Paperwork Reduction Act of 1995, no persons are required to respond to a collection of information unless it displays a valid OMB control number.
(Also Form PTO-1050)

UNITED STATES PATENT AND TRADEMARK OFFICE
CERTIFICATE OF CORRECTION

PATENT NO. : 6,940,875

APPLICATION NO.: 10/643,792

ISSUE DATE : September 6, 2005

INVENTOR(S) : Mesecher et al.

It is certified that an error appears or errors appear in the above-identified patent and that said Letters Patent is hereby corrected as shown below:

-- $m=\sqrt{I^2+Q^2}$ --.

At column 9, line 55, after the word "The", delete "anaysis" and insert therefor --analysis--.

IN THE CLAIMS

In claim 24, at column 12, line 42, after the word "response", insert --to--.

IN THE DRAWINGS

Please replace Figures 2-5 and 11 with replacement Figures 2-5 and 11 attached hereto.

MAILING ADDRESS OF SENDER (Please do not use customer number below):
Volpe and Koenig, P.C.
United Plaza, Suite 1600
30 South 17th Street
Philadelphia, PA 19103

This collection of information is required by 37 CFR 1.322, 1.323, and 1.324. The information is required to obtain or retain a benefit by the public which is to file (and by the USPTO to process) an application. Confidentiality is governed by 35 U.S.C. 122 and 37 CFR 1.14. This collection is estimated to take 1.0 hour to complete, including gathering, preparing, and submitting the completed application form to the USPTO. Time will vary depending upon the individual case. Any comments on the amount of time you require to complete this form and/or suggestions for reducing this burden, should be sent to the Chief Information Officer, U.S. Patent and Trademark Office, U.S. Department of Commerce, P.O. Box 1450, Alexandria, VA 22313-1450. DO NOT SEND FEES OR COMPLETED FORMS TO THIS ADDRESS. SEND TO: **Attention Certificate of Corrections Branch, Commissioner for Patents, P.O. Box 1450, Alexandria, VA 22313-1450.**

If you need assistance in completing the form, call 1-800-PTO-9199 and select option 2.

JAN 25 2006

OIPE IAP88
JAN 20 2006
PATENT & TRADEMARK OFFICE

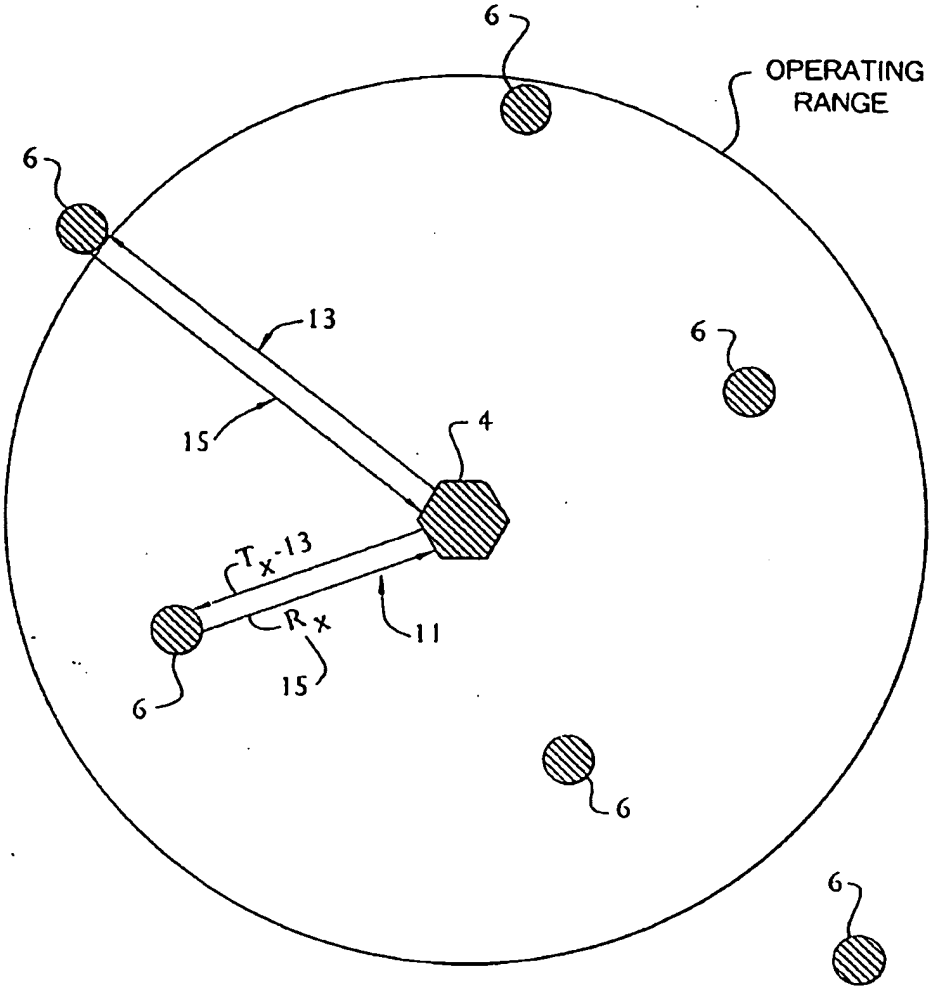

6K to enter JB 9 Feb 08

FIG. 2

JAN 25 2006

OIPE
IAP88
JAN 20 2006
PATENT & TRADEMARK OFFICE

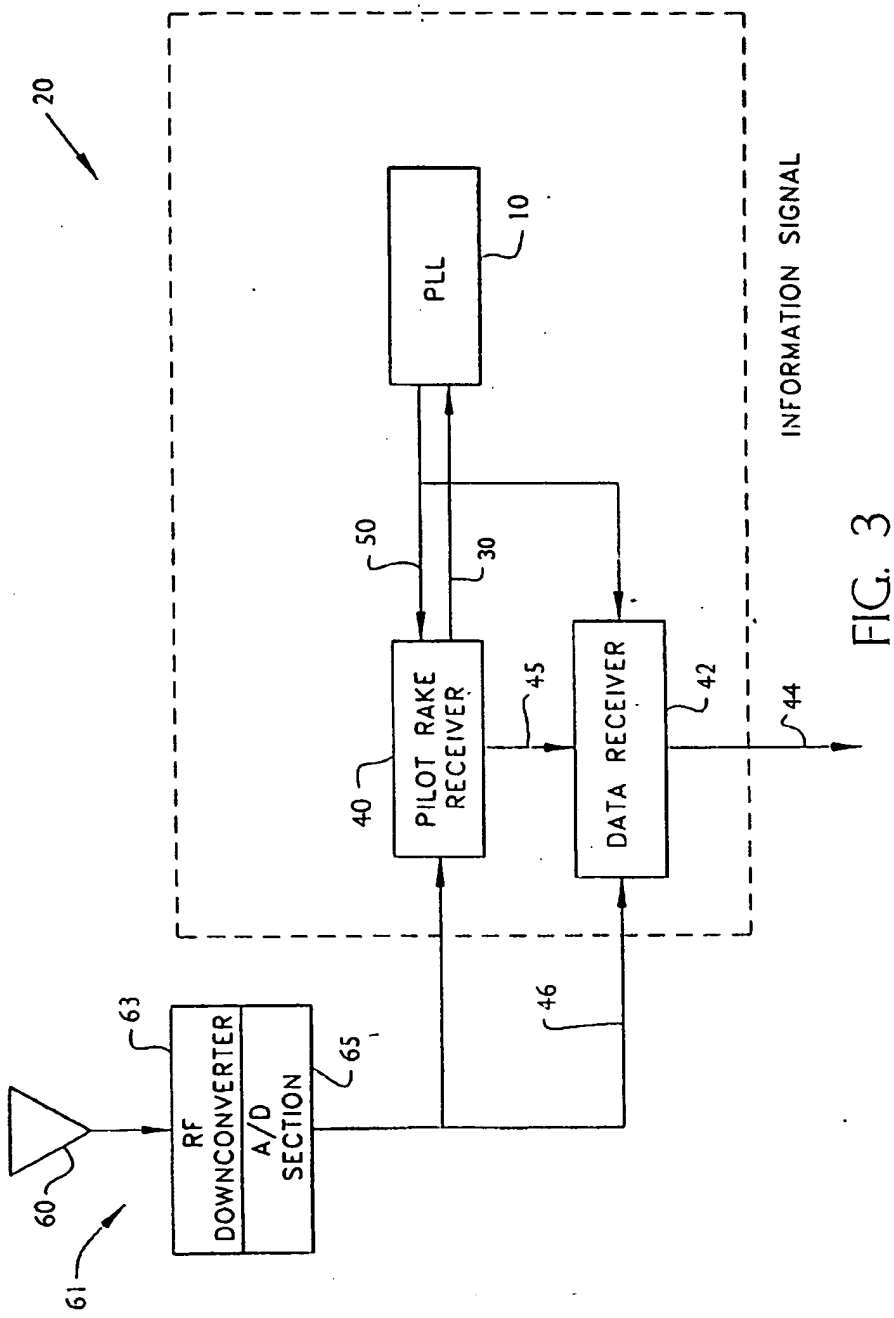

FIG. 3

OK to enter
JP
9Feb08

JAN 25 2006

OIPE IAP88
JAN 20 2006
PATENT & TRADEMARK OFFICE

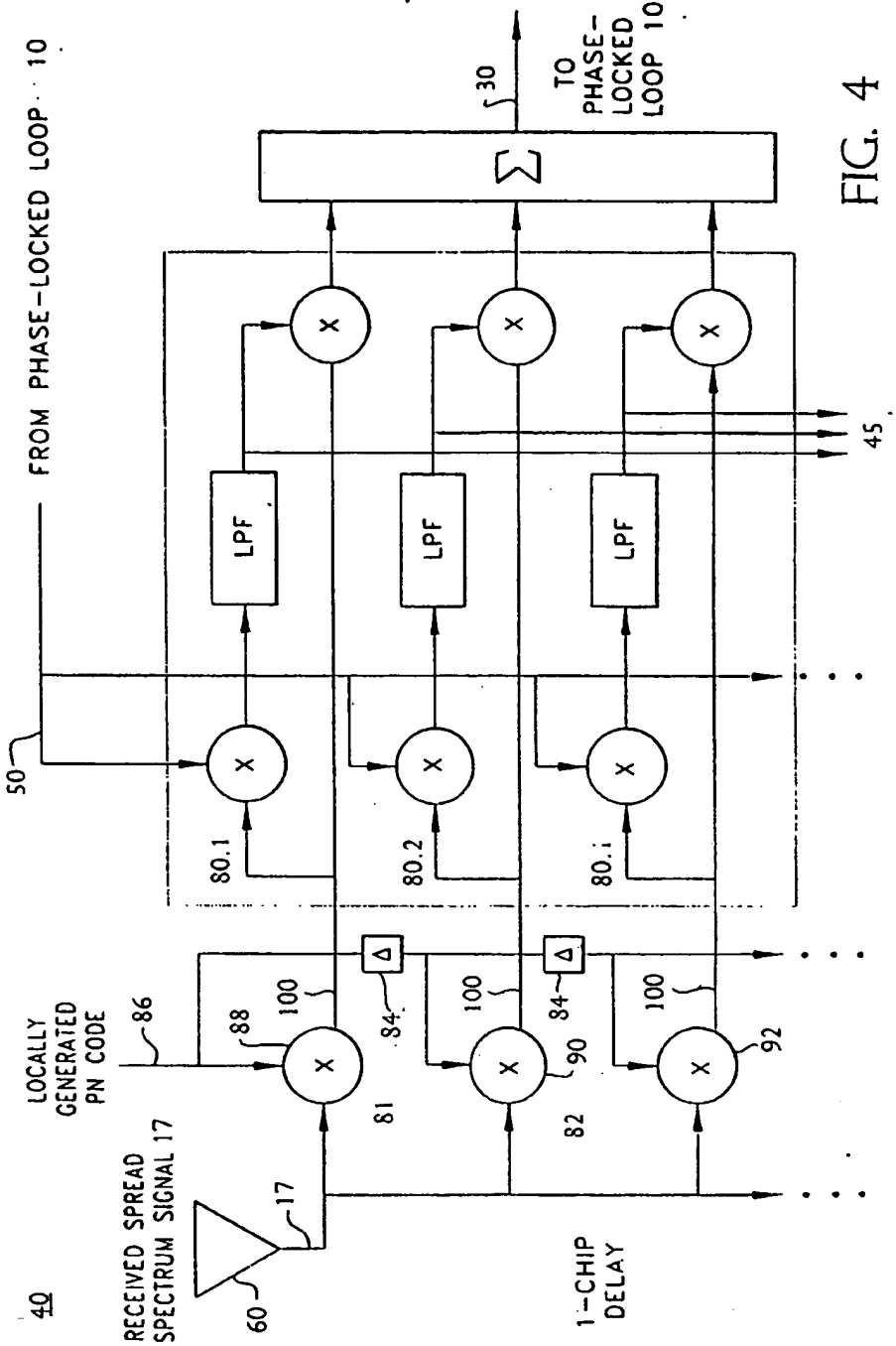

FIG. 4

Ok to enter JP 9Feb08

JAN 25 2006

OIPE IAP88
JAN 20 2006
PATENT & TRADEMARK OFFICE

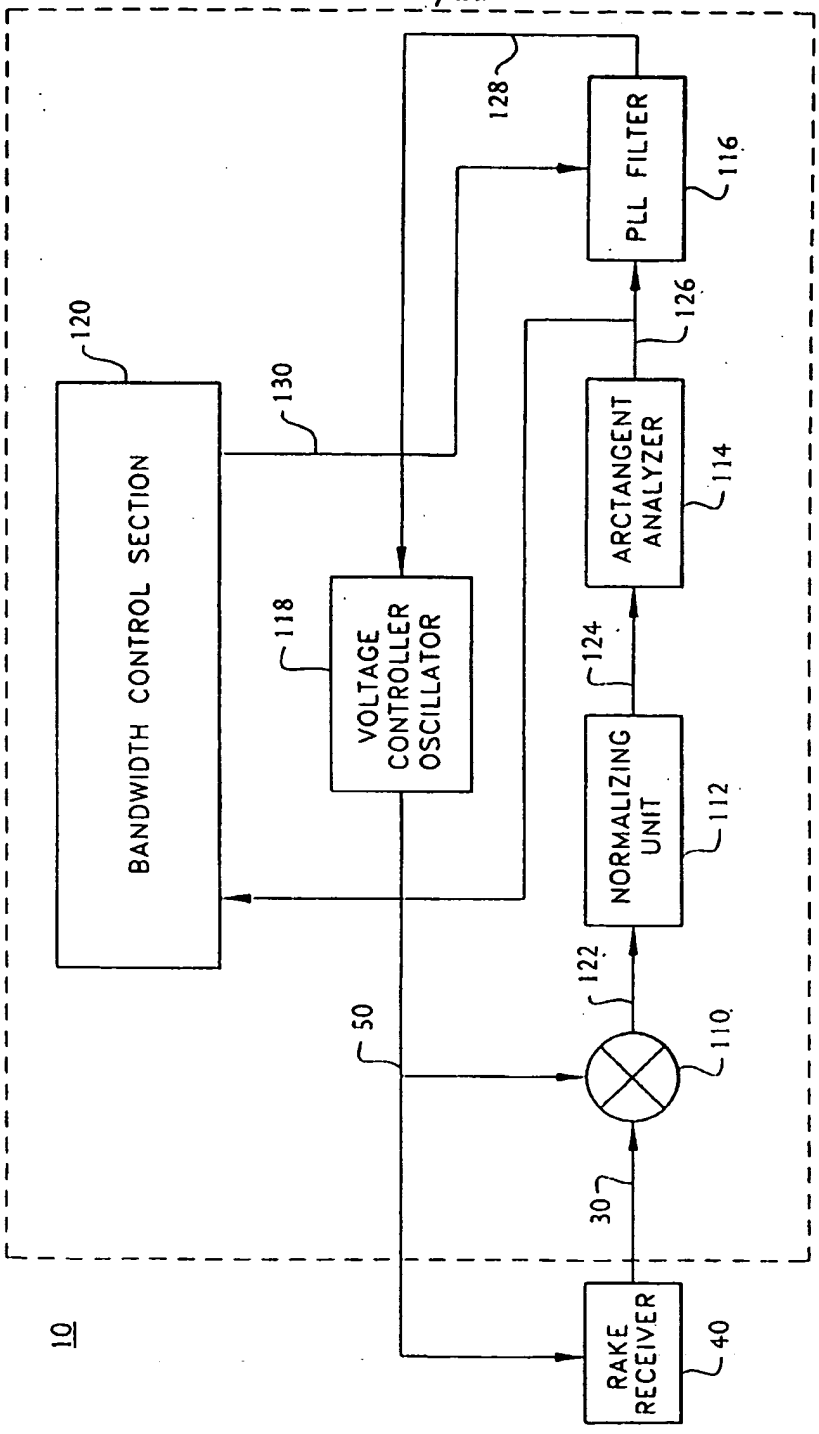

FIG. 5

Ok to enter JB 9 Feb 08

JAN 25 2006

OIPE
JAN 20 2006
PATENT & TRADEMARK OFFICE

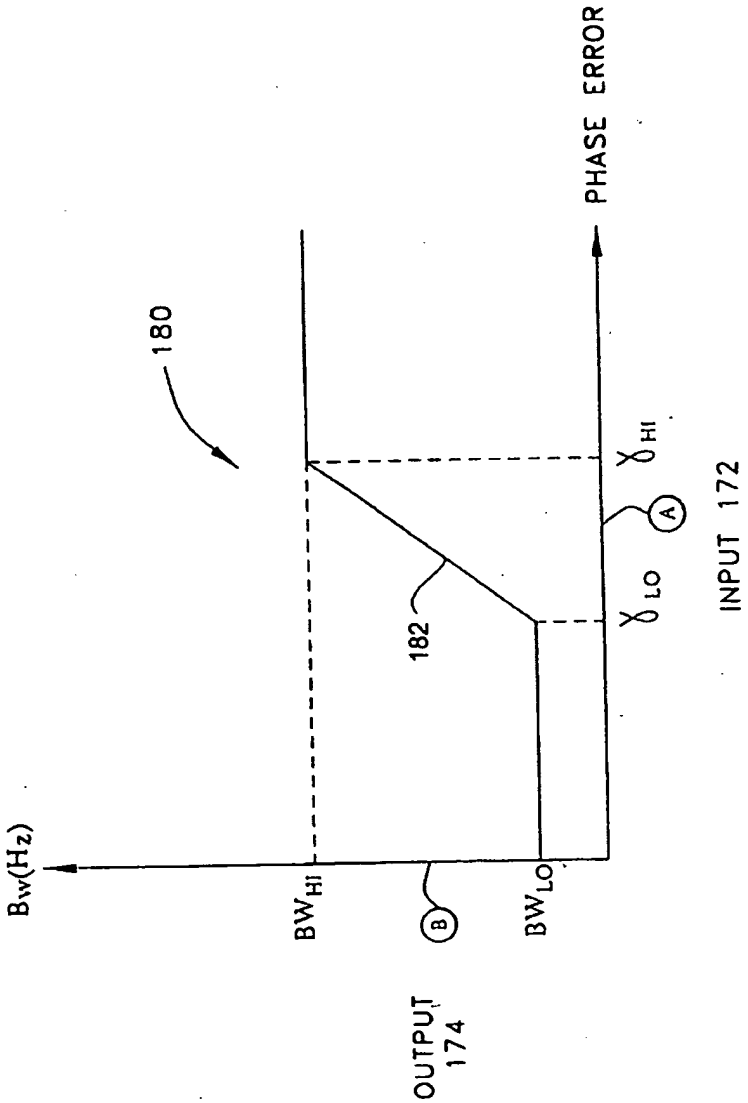

FIG. 11

OK to enter DD 9/26/08

JAN 25 2006

US006940875B2

(12) **United States Patent**
Mesecher et al.

(10) **Patent No.: US 6,940,875 B2**
(45) **Date of Patent: *Sep. 6, 2005**

(54) **CONTINUOUSLY ADJUSTED-BANDWIDTH DISCRETE-TIME PHASE-LOCKED LOOP**

(75) Inventors: **David K. Mesecher**, Huntington Station, NY (US); **Rui Yang**, Greenlawn, NY (US); **Ramon Cerda**, West Babylon, NY (US)

(73) Assignee: **InterDigital Technology Corporation**, Wilmington, DE (US)

(*) Notice: Subject to any disclaimer, the term of this patent is extended or adjusted under 35 U.S.C. 154(b) by 0 days.

This patent is subject to a terminal disclaimer.

(21) Appl. No.: **10/643,792**

(22) Filed: **Aug. 19, 2003**

(65) **Prior Publication Data**

US 2004/0032842 A1 Feb. 19, 2004

Related U.S. Application Data

(63) Continuation of application No. 09/558,686, filed on Apr. 24, 2000, now Pat. No. 6,608,826, which is a continuation of application No. 08/871,109, filed on Jun. 9, 1997, now Pat. No. 6,055,231.

(60) Provisional application No. 60/037,914, filed on Mar. 12, 1997.

(51) **Int. Cl.**[7] **H04J 3/06**

(52) **U.S. Cl.** **370/516**; 370/252; 370/342; 375/136; 375/294

(58) **Field of Search** 370/252, 328, 370/329, 335, 342, 441, 463, 516, 330, 320; 375/136, 147, 294, 344, 206, 200, 150, 222; 379/406.08

(56) **References Cited**

U.S. PATENT DOCUMENTS

3,983,501	A	9/1976	Lindstrum	329/307
4,243,941	A	1/1981	Zdunek	329/309
4,354,277	A	10/1982	Crackel et al.	455/259
4,513,429	A	4/1985	Roeder	375/376
4,630,283	A	12/1986	Schiff	375/143
5,029,180	A	7/1991	Cowart	375/141
5,049,830	A	9/1991	Yoshida	329/306
5,065,107	A	11/1991	Kumar et al.	329/308
5,101,416	A	3/1992	Fenton et al.	375/150
5,142,246	A	8/1992	Petersson	331/11
5,166,952	A	11/1992	Omura et al.	375/149
5,175,729	A	12/1992	Borras et al.	370/345

(Continued)

FOREIGN PATENT DOCUMENTS

WO 9620540 7/1996

Primary Examiner—John Pezzlo
(74) *Attorney, Agent, or Firm*—Volpe and Koenig, P.C.

(57) **ABSTRACT**

A reciever for receiving a CDMA communication signal that is wirelessly transmitted includes a system for correcting phase errors in an information signal which has been transmitted. The correction system comprises circuitry for generating a mixing signal and for combining the mixing signal with said information signal to produce a correction signal. An analyzer analyzes the phase of said correction signal and generates an error signal based on the deviation of the analyzed phase from a reference phase. A bandwidth controller which recursively adjusts the phase of the correction signal such that the phase of said correction signal is substantially equal to said reference phase. The bandwidth controller then selects a bandwidth within an adjustable range based on the correction signal, estimates an offset by interrogating the error signal, and modifies said correction signal by the offset.

25 Claims, 14 Drawing Sheets

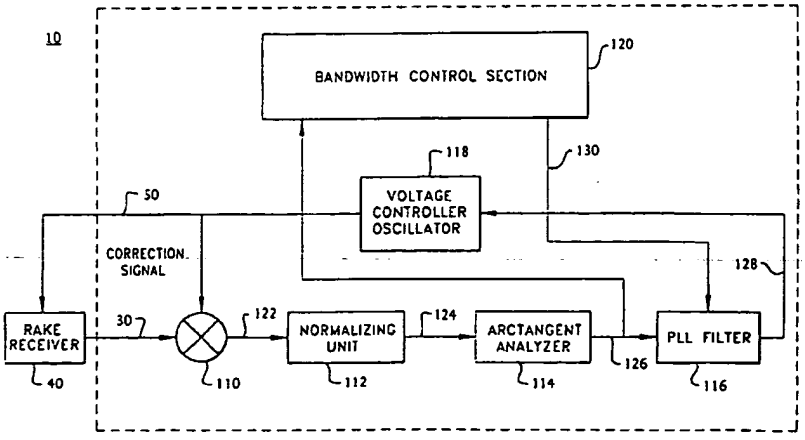

U.S. PATENT DOCUMENTS

5,241,700	A		8/1993	Geesen et al. 455/260
5,390,207	A		2/1995	Fenton et al. 379/149
5,402,448	A		3/1995	Marko et al. 375/340
5,541,965	A		7/1996	Daffara 375/326
5,598,468	A	*	1/1997	Ammicht et al. 379/406.08
5,619,524	A	*	4/1997	Ling et al. 375/130
5,694,388	A		12/1997	Sawahashi et al. 370/206
5,754,583	A		5/1998	Eberhardt et al. 375/147
5,761,239	A		6/1998	Gold et al. 375/206
5,790,591	A		8/1998	Gold et al. 375/206
5,875,215	A	*	2/1999	Dobrica 375/344
5,900,785	A		5/1999	Freed 331/10
6,055,231	A		4/2000	Mesecher et al. 370/342
6,101,176	A		8/2000	Honkasalo et al. 370/335
6,115,411	A		9/2000	Van Driest 375/200

* cited by examiner

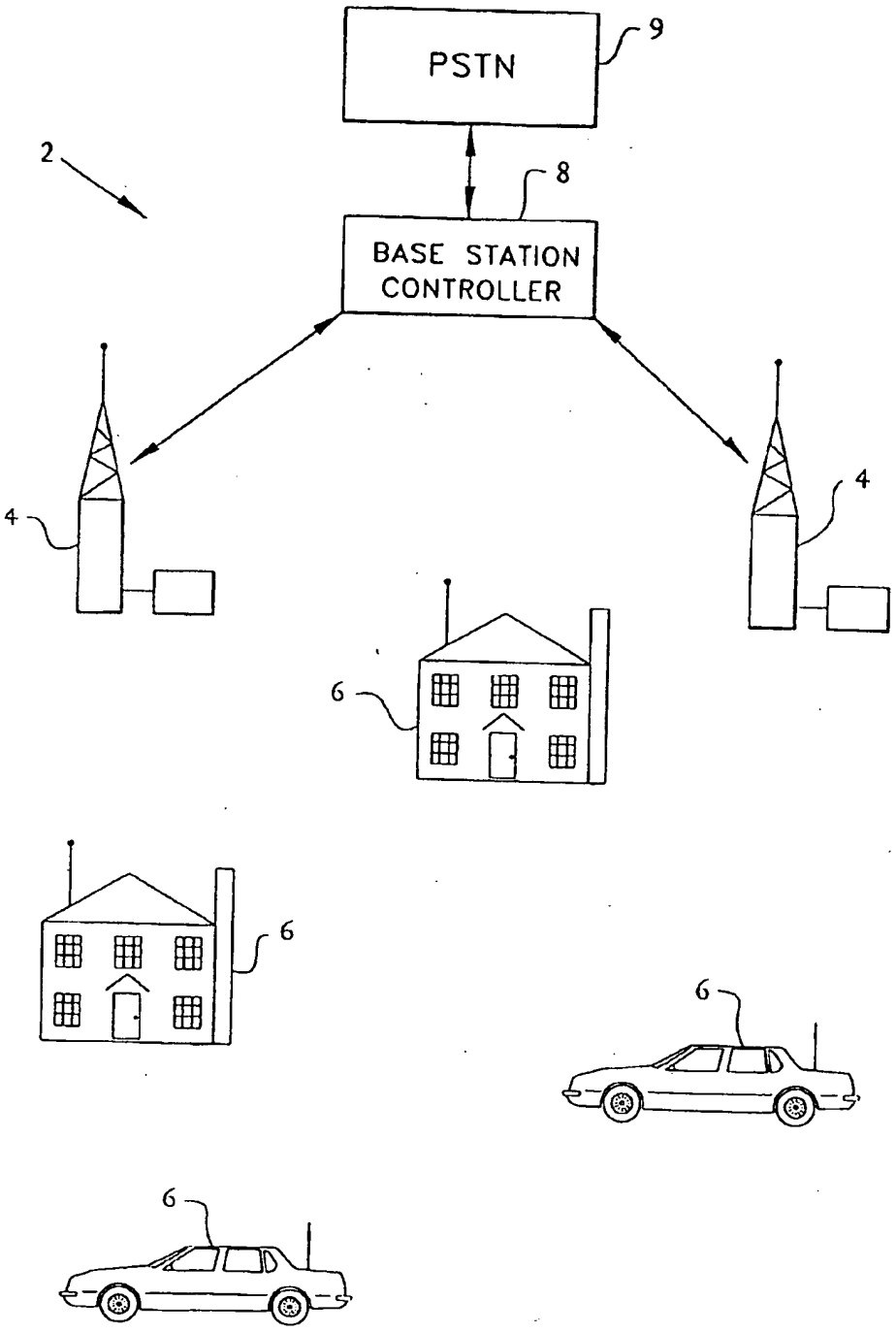

FIG. 1

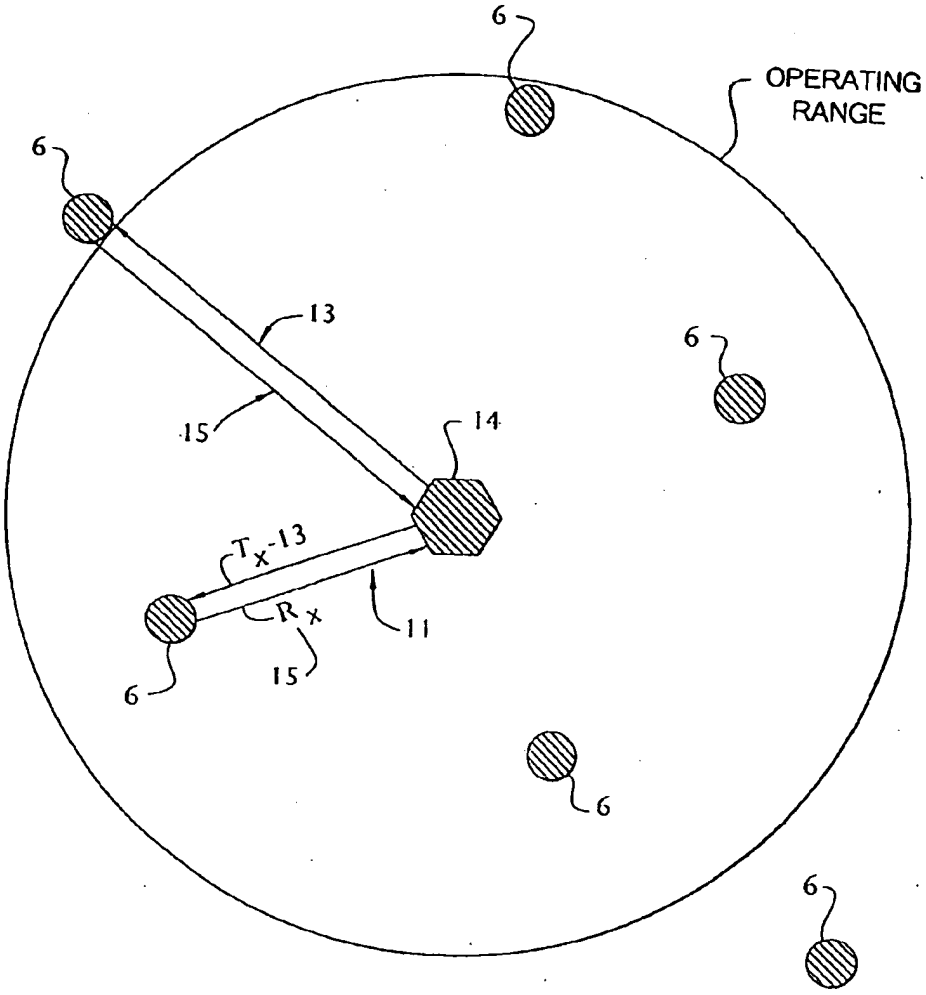

FIG. 2

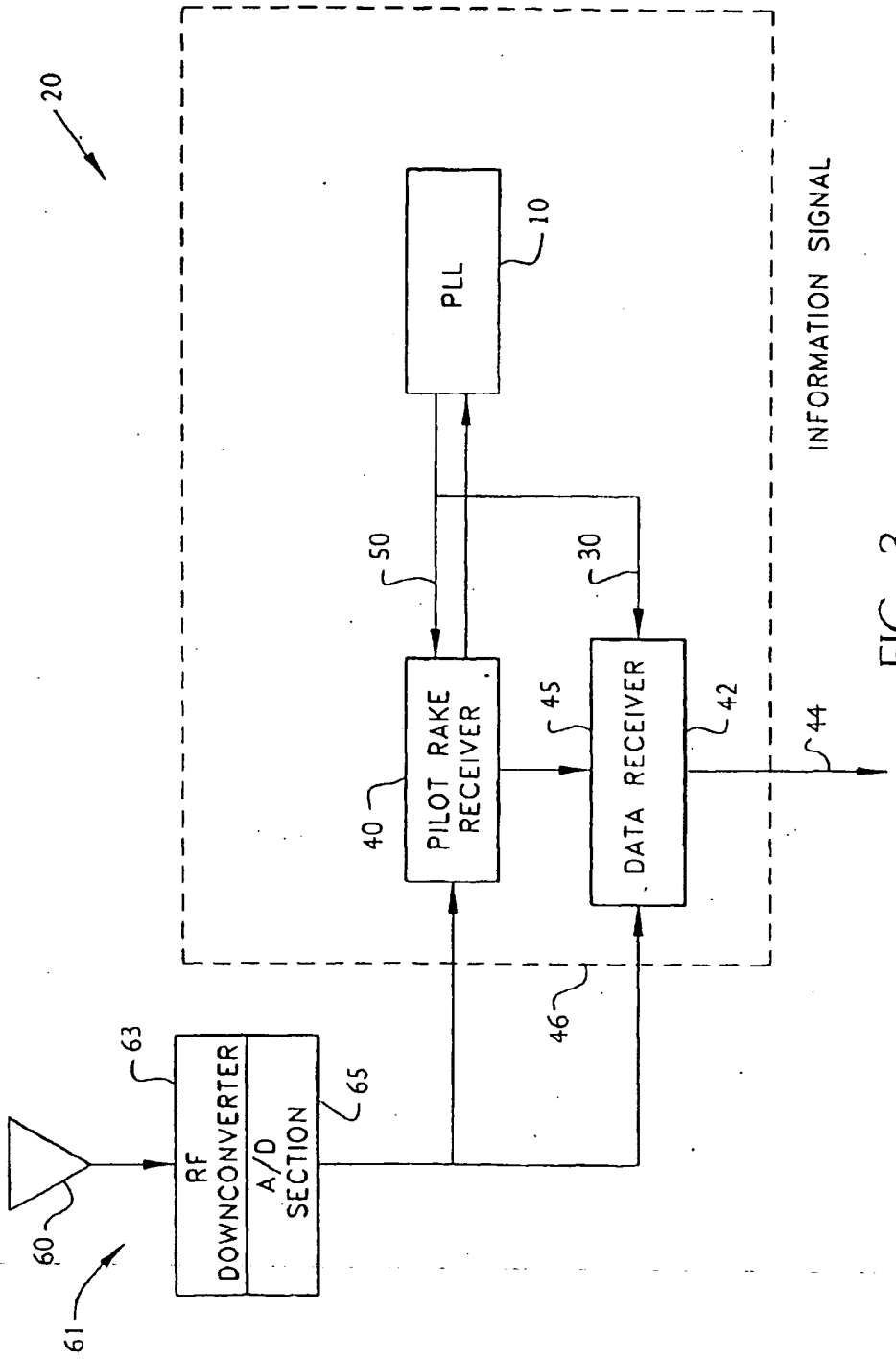
20
PLL
10
INFORMATION SIGNAL
50
30
PILOT RAKE RECEIVER
40
45
DATA RECEIVER
42
44
46
63
RF DOWNCONVERTER
A/D SECTION
65
60
61

FIG. 3

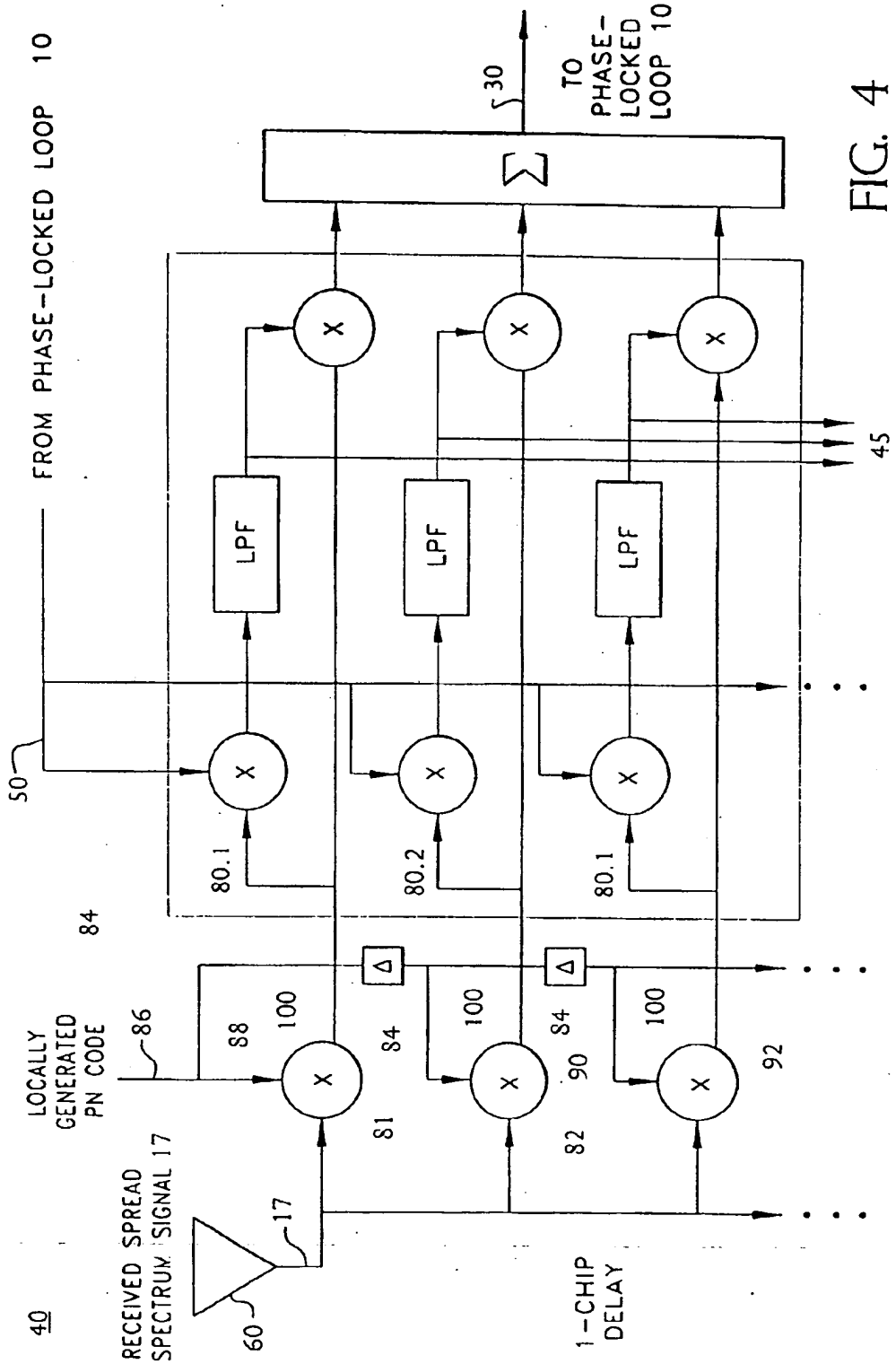
FROM PHASE-LOCKED LOOP 10
TO PHASE-LOCKED LOOP 10
30
LPF
LPF
LPF
45
50
80.1
80.2
80.1
84
LOCALLY GENERATED PN CODE
86
88
100
84
100
84
100
92
90
81
82
RECEIVED SPREAD SPECTRUM SIGNAL 17
17
60
40
1-CHIP DELAY

FIG. 4

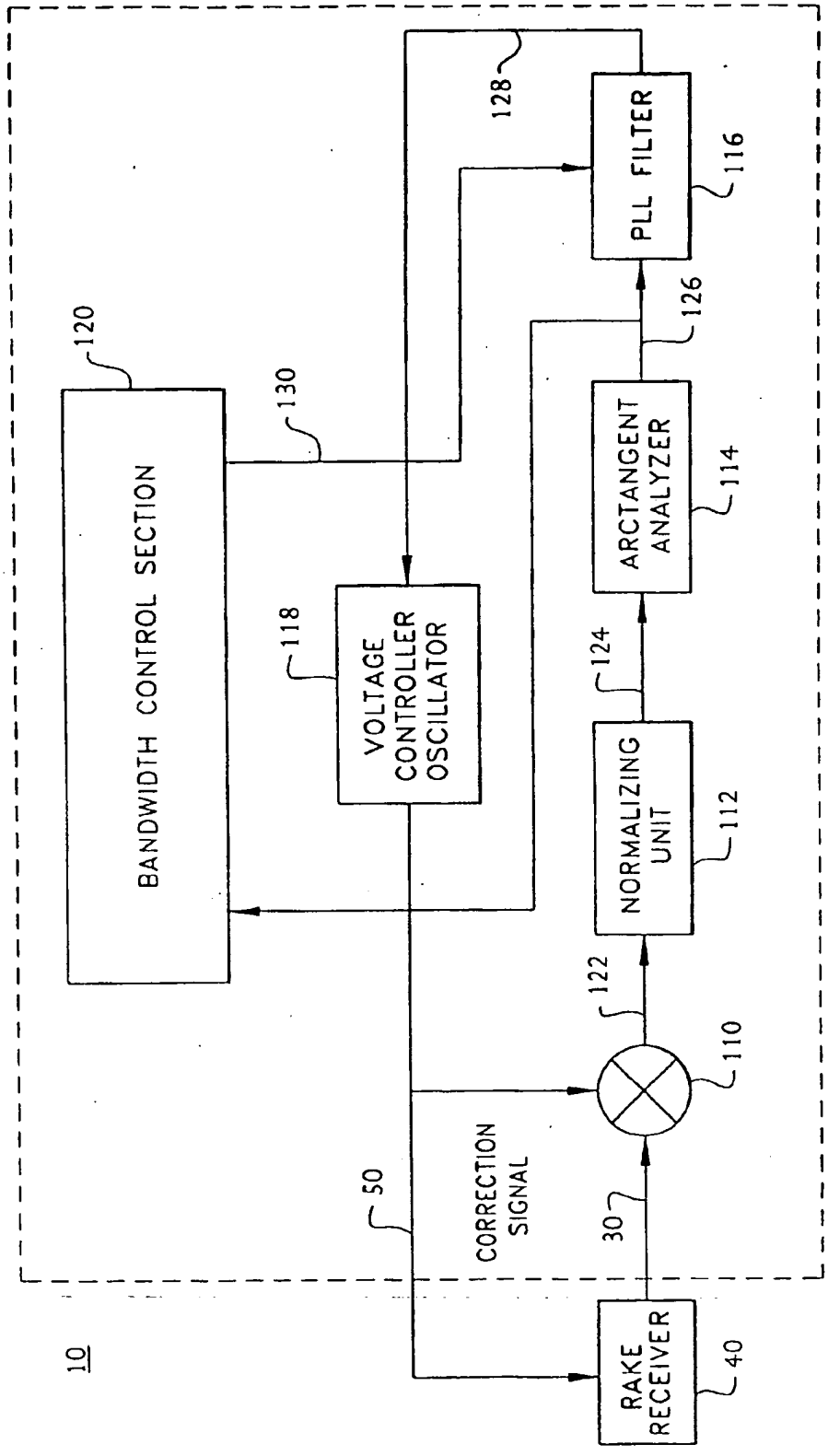
10
BANDWIDTH CONTROL SECTION
120
130
VOLTAGE CONTROLLER OSCILLATOR
118
128
PLL FILTER
116
126
ARCTANGENT ANALYZER
114
124
NORMALIZING UNIT
112
122
110
50
CORRECTION SIGNAL
30
RAKE RECEIVER
40

FIG. 5

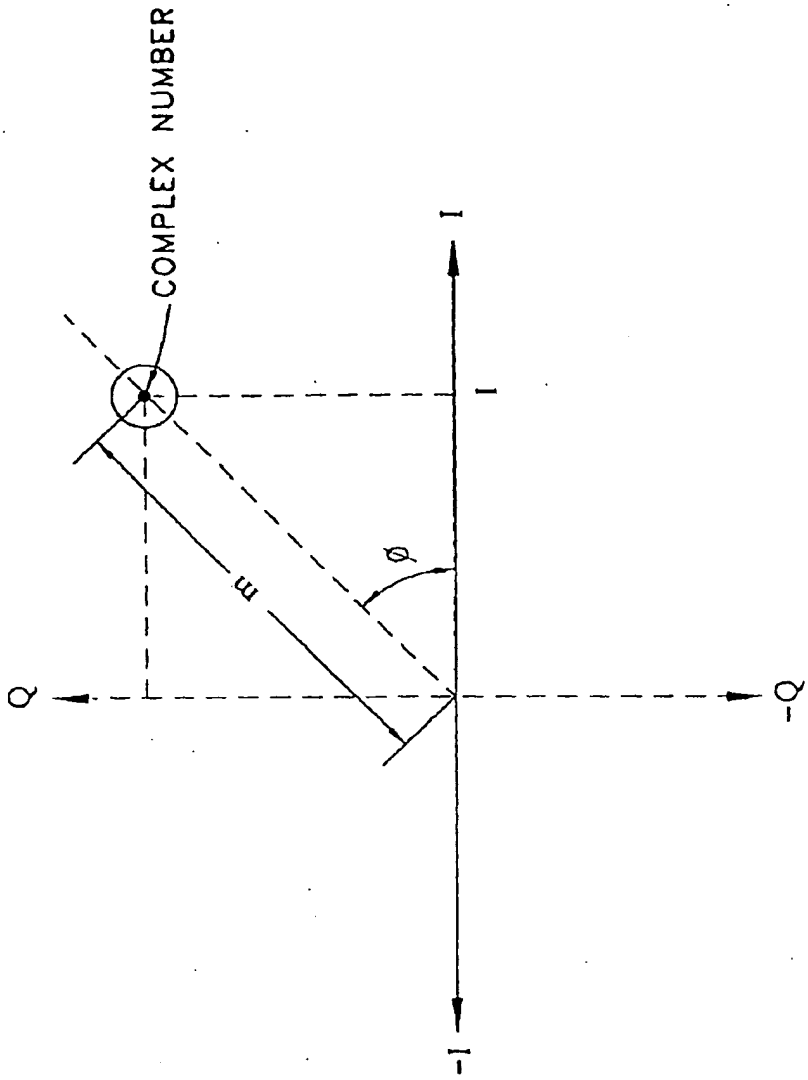

FIG. 6

150

Q

I	−10	−9	−8	• • •	8	9	10
10	ϕ_1	ϕ_2	ϕ_3	• • •	ϕ_{19}	ϕ_{20}	ϕ_{21}
9	ϕ_{22}	ϕ_{23}	ϕ_{24}	• • •	ϕ_{40}	ϕ_{41}	ϕ_{42}
8	ϕ_{43}	ϕ_{44}	ϕ_{45}	• • •	ϕ_{61}	ϕ_{62}	ϕ_{63}
⋮	⋮	⋮	⋮	⋮	⋮	⋮	⋮
−8	ϕ_{379}	ϕ_{380}	ϕ_{381}	• • •	ϕ_{397}	ϕ_{398}	ϕ_{399}
−9	ϕ_{400}	ϕ_{401}	ϕ_{402}	• • •	ϕ_{418}	ϕ_{419}	ϕ_{420}
−10	ϕ_{421}	ϕ_{422}	ϕ_{423}	• • •	ϕ_{439}	ϕ_{440}	ϕ_{441}

FIG. 7

152

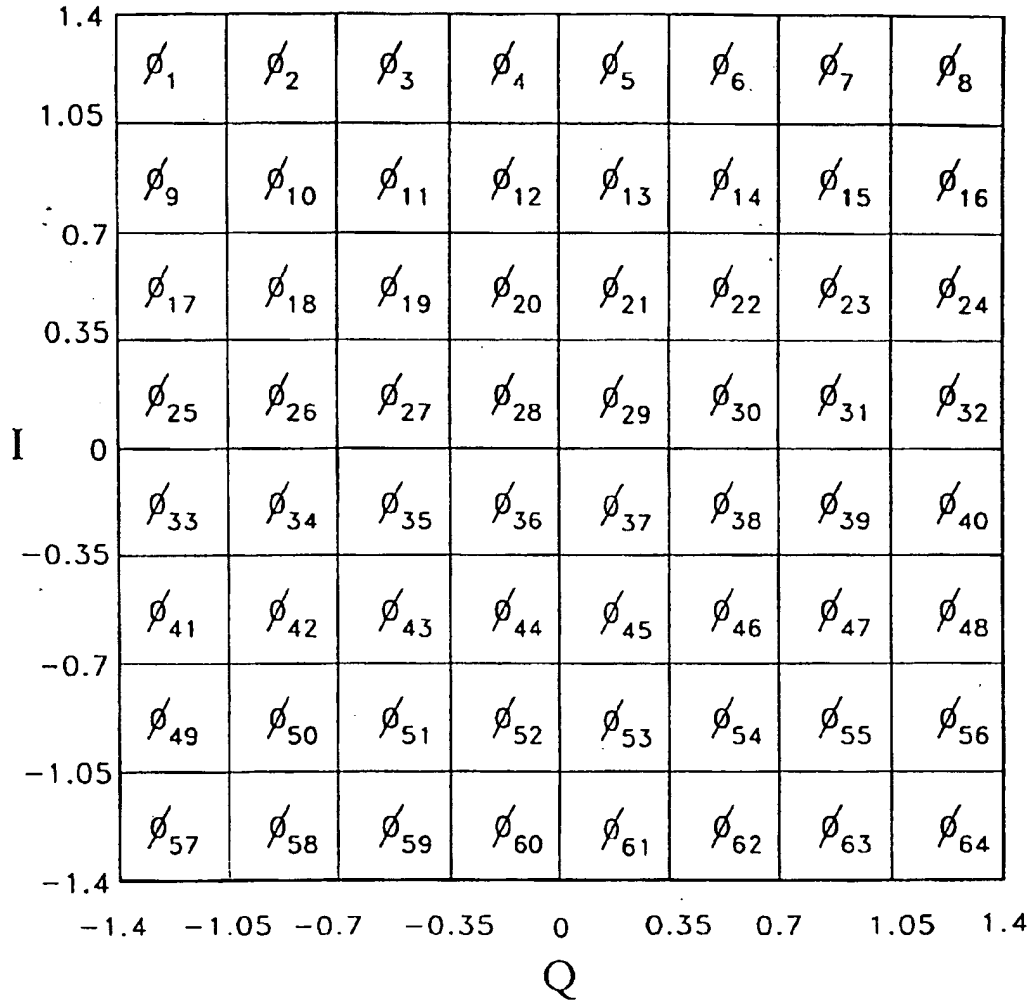
1.4
1.05
0.7
0.35
0
−0.35
−0.7
−1.05
−1.4
I
−1.4 −1.05 −0.7 −0.35 0 0.35 0.7 1.05 1.4
Q
ø1 ø2 ø3 ø4 ø5 ø6 ø7 ø8
ø9 ø10 ø11 ø12 ø13 ø14 ø15 ø16
ø17 ø18 ø19 ø20 ø21 ø22 ø23 ø24
ø25 ø26 ø27 ø28 ø29 ø30 ø31 ø32
ø33 ø34 ø35 ø36 ø37 ø38 ø39 ø40
ø41 ø42 ø43 ø44 ø45 ø46 ø47 ø48
ø49 ø50 ø51 ø52 ø53 ø54 ø55 ø56
ø57 ø58 ø59 ø60 ø61 ø62 ø63 ø64

FIG. 8

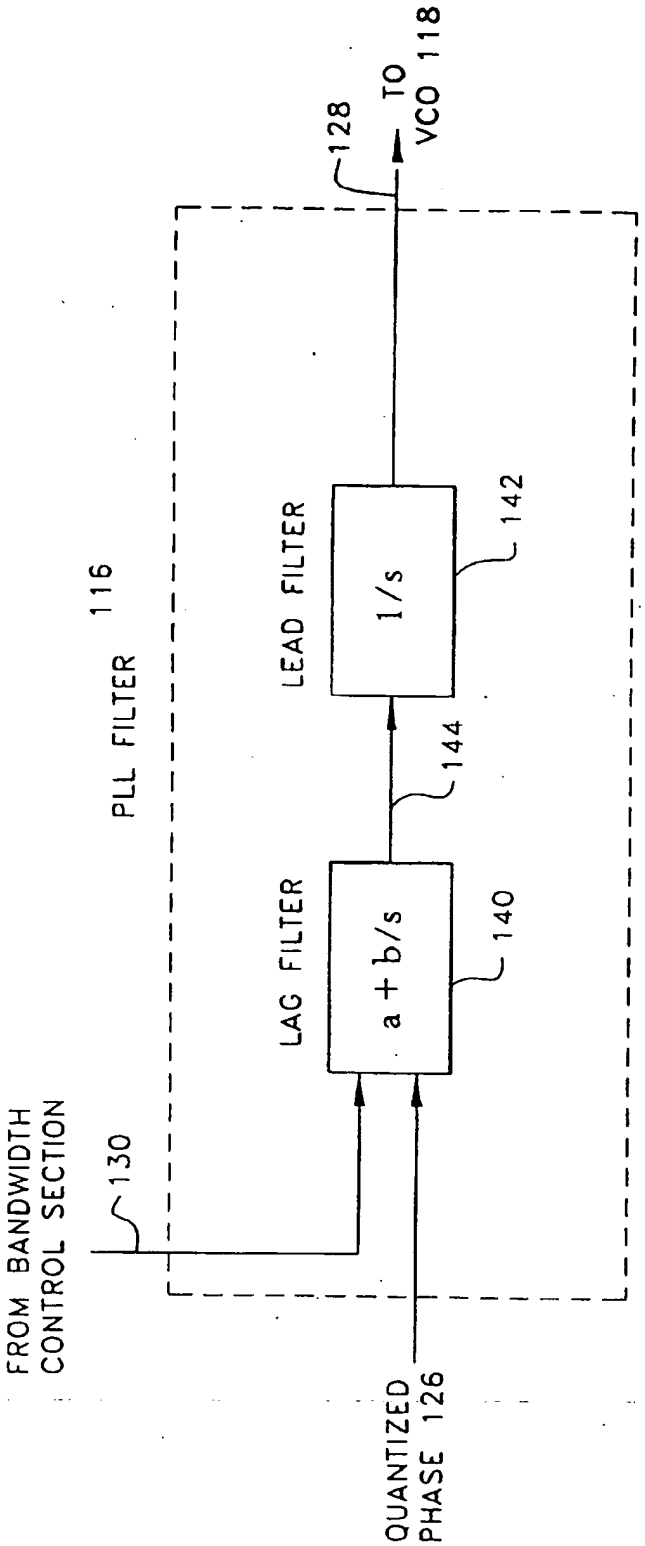
TO VCO 118
128
PLL FILTER 116
LEAD FILTER
1/s
142
144
LAG FILTER
a + b/s
140
FROM BANDWIDTH CONTROL SECTION
130
QUANTIZED PHASE 126

FIG. 9

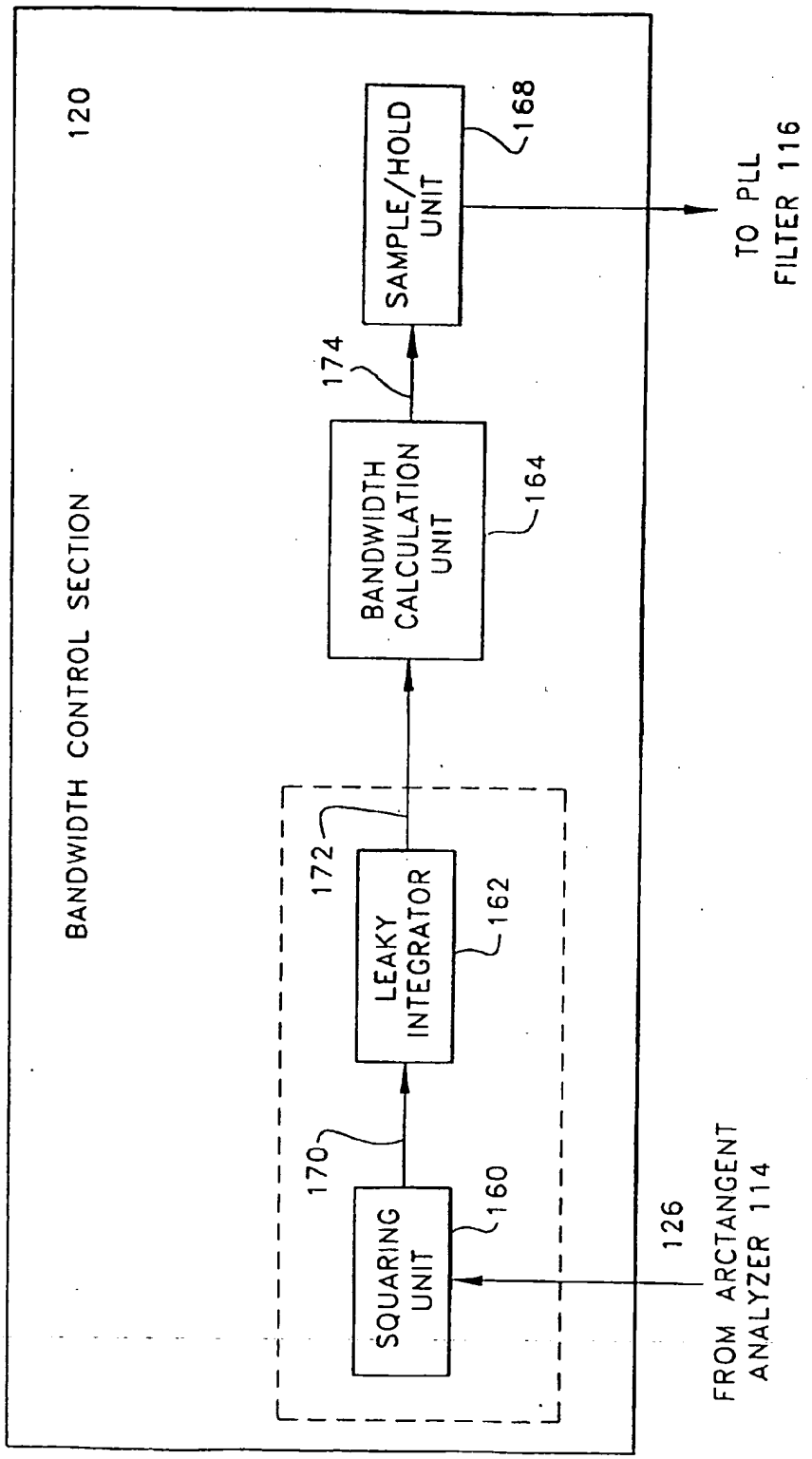
120
BANDWIDTH CONTROL SECTION
SQUARING UNIT
160
LEAKY INTEGRATOR
162
BANDWIDTH CALCULATION UNIT
164
SAMPLE/HOLD UNIT
168
170
172
174
126
FROM ARCTANGENT ANALYZER 114
TO PLL FILTER 116

FIG. 10

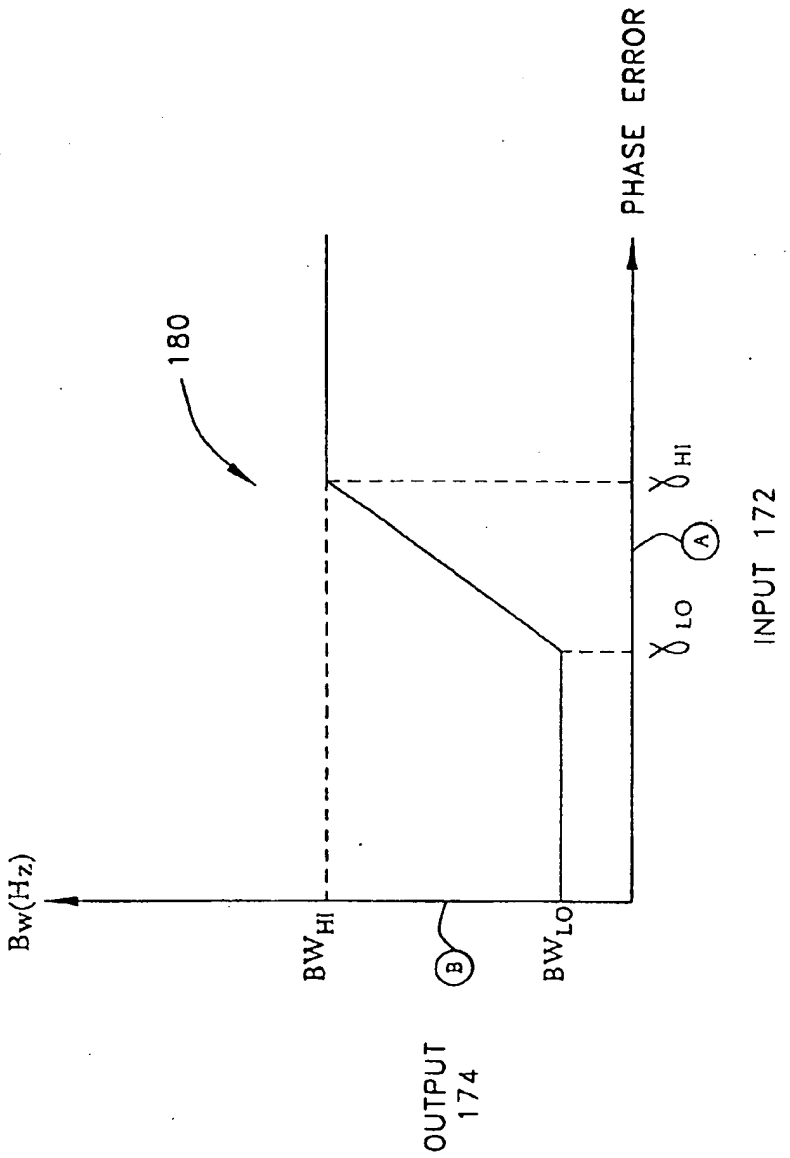
180
PHASE ERROR
γ_{HI}
γ_{LO}
A
INPUT 172
B_W(Hz)
BW_{HI}
BW_{LO}
B
OUTPUT 174

FIG. 11

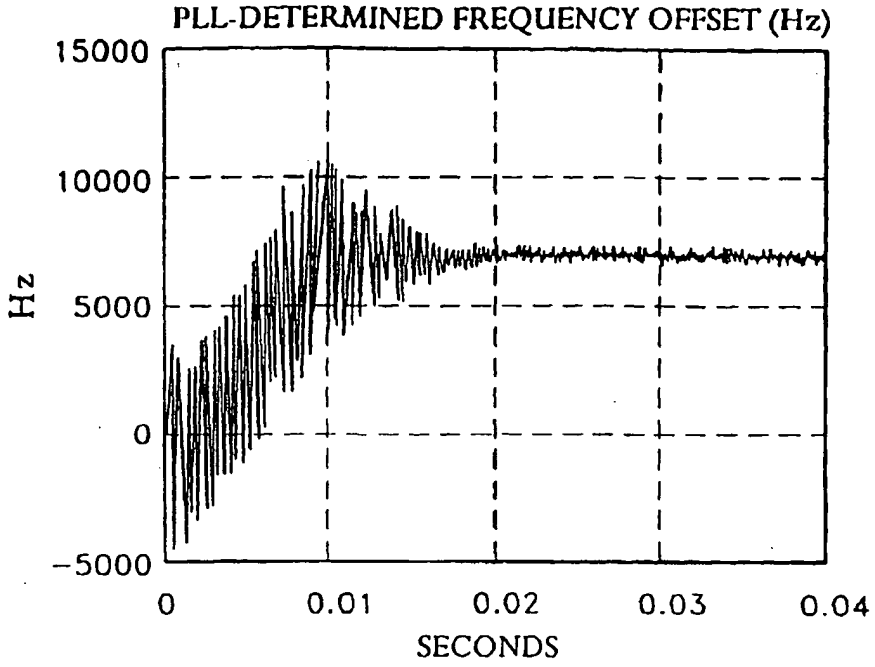

FIG. 12A

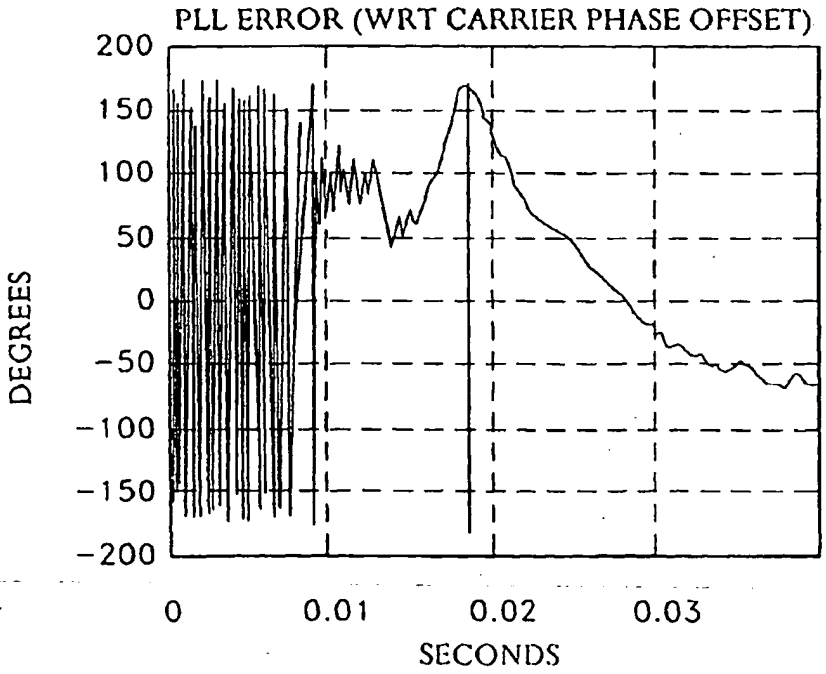

FIG. 12B

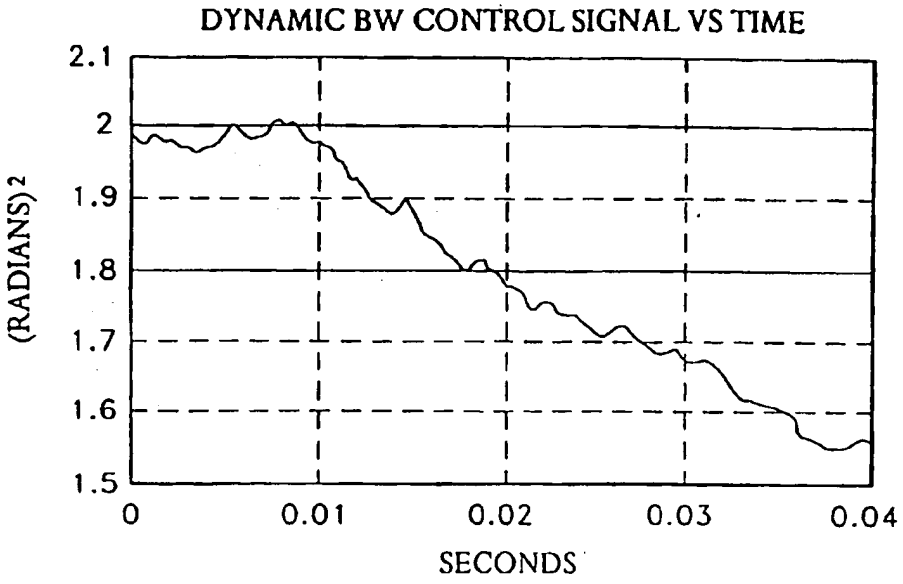

FIG. 12C

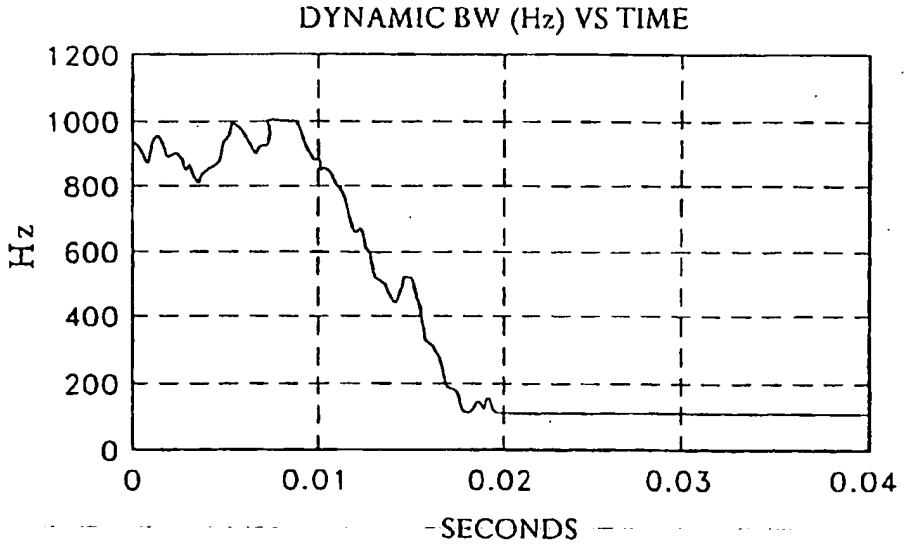

FIG. 12D

FIG. 13

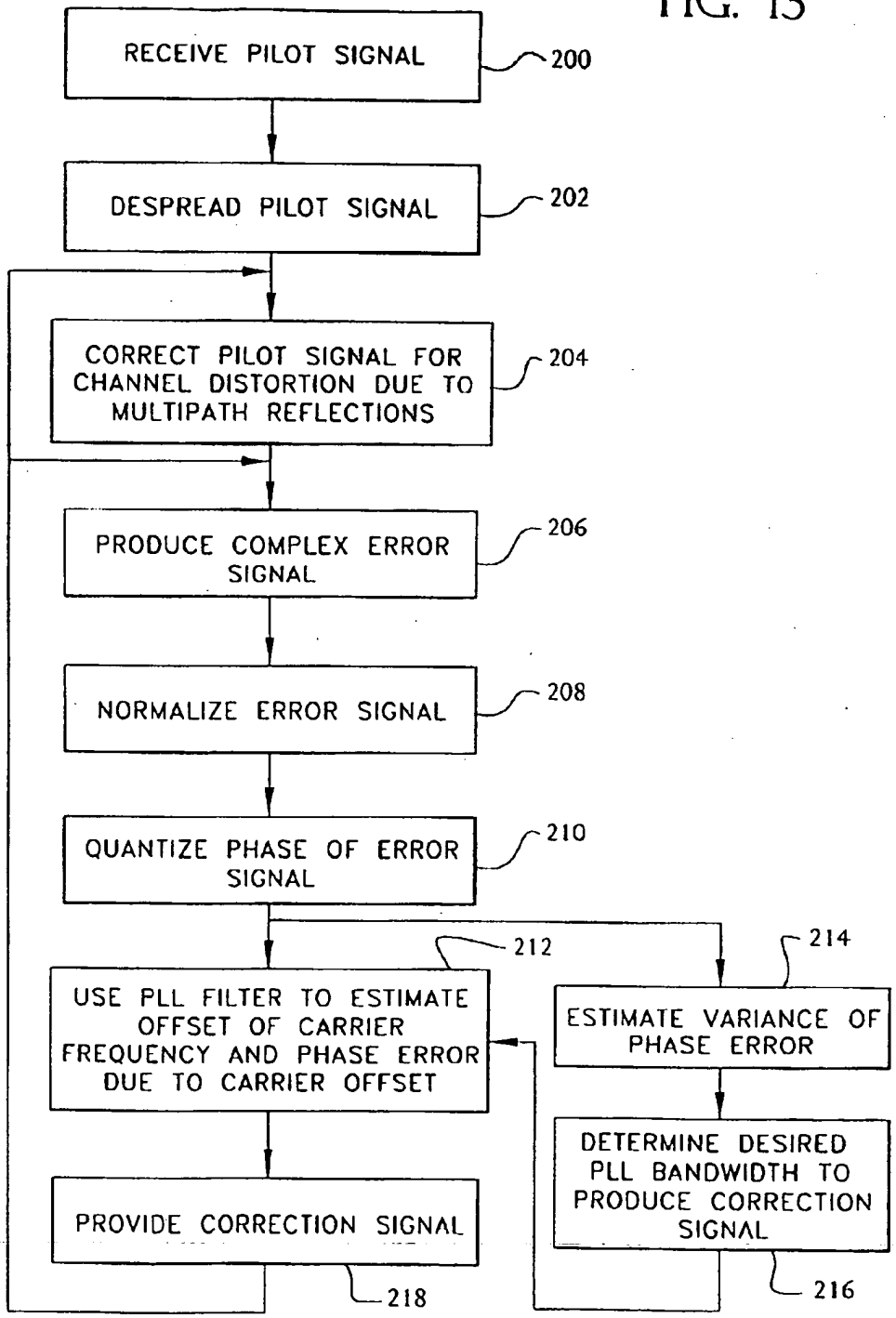
RECEIVE PILOT SIGNAL
200
DESPREAD PILOT SIGNAL
202
CORRECT PILOT SIGNAL FOR CHANNEL DISTORTION DUE TO MULTIPATH REFLECTIONS
204
PRODUCE COMPLEX ERROR SIGNAL
206
NORMALIZE ERROR SIGNAL
208
QUANTIZE PHASE OF ERROR SIGNAL
210
212
USE PLL FILTER TO ESTIMATE OFFSET OF CARRIER FREQUENCY AND PHASE ERROR DUE TO CARRIER OFFSET
PROVIDE CORRECTION SIGNAL
218
214
ESTIMATE VARIANCE OF PHASE ERROR
DETERMINE DESIRED PLL BANDWIDTH TO PRODUCE CORRECTION SIGNAL
216

CONTINUOUSLY ADJUSTED-BANDWIDTH DISCRETE-TIME PHASE-LOCKED LOOP

CROSS REFERENCE TO RELATED APPLICATIONS

This application is a continuation of U.S. patent application Ser. No. 09/558,686, filed Apr. 24, 2000, now U.S. Pat. No. 6,608,826 which is a continuation of U.S. patent application Ser. No. 08/871,109, filed Jun. 9, 1997, now U.S. Pat. No. 6,055,231, issued Apr. 25, 2000, which in turn claims priority from U.S. Provisional Patent Application Ser. No. 60/037,914, filed Mar. 12, 1997 which are incorporated by reference as if fully set forth.

FIELD OF INVENTION

This invention is generally directed to wireless digital communication systems. More particularly, the invention is directed to a code division multiple access (CDMA) receiver having a continuously adjustable bandwidth phase-locked loop for accurately determining the carrier frequency of a received signal.

BACKGROUND

Over the last decade consumers have become accustomed to the convenience of wireless communication systems. This has resulted in a tremendous increase in the demand for wireless telephones, wireless data transmission and wireless access to the World Wide Web. Since the amount of available RF spectrum is fixed, the need to utilize the RF spectrum more efficiently has become paramount.

CDMA communication systems have shown promise in the effort to provide more efficient utilization of the RF spectrum, particularly Broadband Code Division Multiple Access™ or (B-CDMA™) communication systems. B-CDMA™ communication systems permit many communications to be transmitted over the same bandwidth, thereby greatly increasing the capacity of the RF spectrum. In a B-CDMA™ communication system, an information signal at the transmitter is mixed with a pseudorandom "spreading code" which spreads the information signal across the entire communicating bandwidth. The spread signal is upconverted to an RF signal for transmission. A receiver, having the same pseudorandom spreading code, receives the transmitted RF signal and mixes the received signal with an RF sinusoidal signal generated at the receiver by a first-stage local oscillator (LO) to downconvert the spread spectrum signal. The spreaded information signal is subsequently mixed with the pseudorandom spreading code, which has also been locally generated, to obtain the original information signal.

In order to detect the information embedded in a received signal, a receiver must know the exact pseudorandom spreading code that was used to spread the signal. All signals which are not encoded with the pseudorandum code of the receiver appear as background noise to the receiver. Accordingly, as the number of users that are communicating within the operating range of a particular base station increases, the amount of background noise also increases, making it difficult for receivers to properly detect and receive signals. The transmitter may increase the power of the transmitted signal, but this will increase the noise as seen by other receivers. Therefore, increasing the signal-to-noise ratio of a received signal without requiring a corresponding increase in the transmission power of the signal is desirable.

One way to increase the signal-to-noise ratio of a received signal is to ensure that the first stage local oscillator (LO) at the receiver is at the same frequency as the received RF carrier signal. If there is a slight frequency offset, the offset will manifest itself in the baseband section of the receiver as a phase error on the decoded QPSK symbol, resulting in a degradation of the quality of the communication.

Accordingly, it is critical to properly detect the frequency of the received RF carrier signal in order to optimize the quality of the received signal.

SUMMARY

The continuously adjusted-bandwidth phase-locked loop (PLL) of the present invention is used by a B-CDMA™ receiver to correct for any deviation, or offset, that may exist between the received radio frequency (RF) carrier signal and the frequency of the first stage LO that converts the received RF carrier signal to an intermediate frequency (IF). The PLL in the receiver includes a filter with an adjustable bandwidth. A wider bandwidth is used during initial acquisition of the received signal. After the PLL has acquired the received carrier signal using the wider bandwidth, the bandwidth of the filter is gradually narrowed to provide a low steady-state error. Accordingly, it is an object of the invention to provide an improved CDMA receiver which corrects for any offset that may exist between the received RF carrier signal and the frequency of the first stage LO.

Other objects and advantages will become apparent to those skilled in the art after reading the detailed description of a presently preferred embodiment.

BRIEF DESCRIPTION OF THE DRAWING(S)

FIG. **1** is a communication network embodying the present invention;

FIG. **2** shows propagation of signals between a base station and a plurality of subscriber units;

FIG. **3** is a block diagram of the PLL implemented in a programmable digital signal processor within the receiver section;

FIG. **4** is a detailed block diagram of a rake receiver used in accordance with the teachings of the present invention;

FIG. **5** is a block diagram of the continuously adjustable bandwidth PLL in accordance with the present invention;

FIG. **6** is a diagram of the mapping of polar and Cartesian coordinates;

FIG. **7** is a look-up table utilized to implement the arctangent analyzer;

FIG. **8** is the preferred embodiment of a look-up table utilized to implement the arctangent analyzer;

FIG. **9** is a block diagram of the PLL filter comprising a lag filter and a lead filter in accordance with the present invention;

FIG. **10** is a block diagram of the bandwidth control section;

FIG. **11** illustrates the transfer function utilized in the bandwidth calculation unit;

FIG. **12A** is a signal diagram of the carrier offset frequency estimate provided by the output of the lag filter;

FIG. **12B** is a signal diagram of the phase correction in degrees provided by the output of the lead filter;

FIG. **12C** is a signal diagram of the bandwidth control signal versus time;

FIG. **12D** is a signal diagram of the dynamic bandwidth versus time; and

FIG. **13** is a flow diagram of the method of adjusting the PLL bandwidth in accordance with the present invention.

DETAILED DESCRIPTION OF THE PREFERRED EMBODIMENT(S)

The preferred embodiment will be described with reference to the drawing figures wherein like numerals represent like elements throughout.

A communication network **2** embodying the present invention is shown in FIG. **1**. The communication network **2** generally comprises one or more base stations **4**, each of which is in wireless communication with a plurality of subscriber units **6**, which may be fixed or mobile. Each subscriber unit **6** communicates with either the closest base station **4** or the base station **4** which provides the strongest communication signal. The base stations **4** also communicate with a base station controller **8**, which coordinates communications among base stations **4**. The communication network **2** may also be connected to a public switched telephone network (PSTN) **9**, wherein the base station controller **8** also coordinates communications between the base stations **4** and the PSTN **9**. Preferably, each base station **4** communicates with the base station controller **8** over a wireless link, although a land line may also be provided. A land line is particularly applicable when a base station **4** is in close proximity to the base station controller **8**.

The base station controller **8** performs several functions. Primarily, the base station controller **8** provides all of the operations, administrative and maintenance (OA&M) signaling associated with establishing and maintaining all of the wireless communications between the subscriber units **6**, the base stations **4**, and the base station controller **8**. The base station controller **8** also provides an interface between the wireless communication system **2** and the PSTN **9**. This interface includes multiplexing and demultiplexing of the communication signals that enter and leave the system **2** via the base station controller **8**. Although the wireless communication system **2** is shown employing antennas to transmit RF signals, one skilled in the art should recognize that communications may be accomplished via microwave or satellite uplinks. Additionally, the functions of the base station controller **8** may be combined with a base station **4** to form a "master base station".

Referring to FIG. **2**, the propagation of signals between a base station **4** and a plurality of subscriber units **6** is shown. A two-way communication channel **11** comprises a signal transmitted **13** (Tx) from the base station **4** to the subscriber unit **6** and a signal received **15** (Rx) by the base station **4** from the subscriber unit **6**. The signaling between the base station **4** and the subscriber units **6** includes the transmission of a pilot signal **17**. The pilot signal **17** is a spreading code which carries no data bits. The pilot signal **17** is used for subscriber unit **6** acquisition and synchronization, as well as for determining the parameters of the adaptive matched filter used in the data receiver.

The subscriber unit **6** must acquire the pilot signal **17** transmitted by the base station **4** before it can receive or transmit any data. Acquisition is the process whereby the subscriber unit **6** aligns its locally generated spreading code with the received pilot signal **17**. The subscriber unit **6** searches through all of the possible phases of the received pilot signal **17** until it detects the correct phase, (the beginning of the pilot signal **17**).

The PLL **10** in accordance with the present invention acts upon the transmitted pilot signal **17**, which is an auxiliary signal transmitted from the base station **4** to all subscriber units **6** and from subscriber units **6** to the base station **4** which is not used as a traffic channel to transmit any voice or data information. With respect to the subscriber units **6**, the signal **17** is used: 1) to provide synchronization of the locally generated pseudorandom code with the transmitted pseudorandom code; and 2) as a transmission power reference during initial power ramp-up of the subscriber unit **6**. With respect to the base station **4**, the pilot signal **17** is utilized to provide synchronization of the locally generated pseudorandom code with the transmitted pseudorandom code. In accordance with the present invention, the pilot signal **17** is additionally used in both the base station **4** and the subscriber unit **6** to determine the difference between the frequency of the received RF carrier signal and the first stage LO that downconverts the received RF carrier signal to IF.

The CDMA pilot signal **17** is a sequence of pseudorandom complex numbers which are modulated by a constant complex pilot value having a magnitude of one and phase of zero. The advantage of using the pilot signal **17** is that the transmitted despread value is known to the subscriber unit **6**. This can be used by the PLL **10** in the subscriber unit **6** to estimate and correct for phase error due to RF carrier signal offset.

The difference in the frequency of the received RF carrier signal and the first stage LO can be generally attributed to two sources: 1)component mismatches; and 2)RF distortion. Component mismatches between the transmitter oscillator **4** and the receiver oscillator **6** may cause slightly different oscillator outputs. These component mismatches can be further exacerbated by local environmental conditions, such as the heating or cooling of electronic components, which may cause performance changes in the components. With respect to RF distortion, doppler effects caused by the motion of the subscriber unit **6**, the base station **4** or a multipath reflector may cause the RF carrier to become distorted during transmission. This may result in a RF carrier offset.

Referring to FIG. **3**, the PLL **10** is implemented in a programmable digital signal processor within the digital receiver section **20** to provide flexibility in system architecture. The pilot signal **17** is received via the antenna **60** and is processed by the analog receiver section **61**, which includes an RF downconverter **63** and an analog-to-digital section **65**. The downconverted and digitized pilot signal **17** is then processed by the digital receiver section **20** which includes a pilot rake receiver **40**, the PLL **10**, and a data receiver **42**. The pilot signal **17** enters the rake receiver **40** for despreading. The PLL monitors the output from the pilot rake receiver **40**, which comprises the despread pilot signal **30**, to estimate and correct for a phase error due to RF carrier offset, thereby providing acceptable speech quality. The pilot rake receiver **40** operates on the pilot signal **17** to build a receiver filter. The receiver filter compensates for channel distortion due to multipath effects. The filter parameters **45** are forwarded from the pilot rake receiver **40** to the data receiver **42** which constructs the receiver filter in accordance with those parameters **45**. Accordingly, when a data signal enters the data receiver **42**, the data receiver **42** is able to compensate for channel distortion due to multipath effects and output a more accurate information signal **44**.

The rake receiver **40** is shown in greater detail in FIG. **4**. The rake receiver **40** provides an estimate of the complex impulse response, having real and imaginary components, of the channel over which the pilot signal **17** is transmitted. The rake receiver **40** has a plurality of independent rake elements **80.1**, **80.2**, **80.i**, wherein the input to each rake element **80.1**, **80.2**, **80.i** is a delayed and despread replica **100** of the received pilot signal **17**. The amount of delay **84** between adjacent rake elements **80.1**, **80.2**, **80.i** is one chip. The delayed replicas **100** of the pilot signal **17** are created

without delay lines by using a mixer **88, 90, 92** to correlate the received pilot signal **17** with the locally generated pilot pseudonoise code **86**, offset by the appropriate amount of chips **84**.

Each rake element **80.1, 80.2, 80.**i performs an open loop estimation of the value of the impulse response of the RF channel, which can be represented as h(t), at the point t=T*i, where T is the length of a chip. Thus, the rake receiver **40** produces N noisy estimates of the sampled impulse response of the channel of the received pilot signal **17**, at evenly spaced intervals, where N is the number of rake elements **80.1, 80.2, 80.**i. The low pass filter on each rake element **80.1, 80.2, 80.**i smoothes each corresponding sample impulse response estimate. The complex conjugates of each smoothed sampled impulse response estimate are used as the weights on the channel-matching filter. This serves to remove the signal distortion from the received pilot signal **17** and data signals **46** that occur due to multipath effects in the channel.

The pilot rake receiver **40** and the PLL **10** operate in conjunction with one another in the receiver section **20**. In order for the PLL **10** to perform optimally, it requires a despread pilot signal **30** with the distortion effects due to multipath removed. This is accomplished by the adaptive matched filter obtained from using the channel-impulse-response estimate provided by the pilot rake receiver **40**. The pilot rake receiver **40** and the data receiver **42** cannot operate effectively unless the received pilot signal **17** and the data signals **46** have been corrected for phase error due to RF carrier signal offset. The phase error correction signal **50** is provided by the PLL **10** to the pilot rake receiver **40** and data receiver **42**. Optimal performance of the receiver **20** will not occur until the pilot rake receiver **40** and the PLL **10** have reached a mutually satisfactory equilibrium point. The operation of the data receiver **42** is well known to those of skill in the art.

Referring to FIG. **5**, the continuously adjusted-bandwidth PLL **10** in accordance with the present invention is shown. The PLL **10** comprises a mixer **110**, a normalizing unit **112**, an arctangent analyzer **114**, a PLL filter **116**, a voltage controlled oscillator (VCO) **118**, and a bandwidth control section **120**. The mixer **110** receives its input from the pilot rake receiver **40**. The signal output from the rake receiver **40** is the despread pilot signal **30** which has been processed to correct channel distortion due to multipath effects. This signal **30** is mixed with a "correction signal" **50** to produce a complex error signal **122**. In accordance with the present invention, the bandwidth of the PLL filter **116** is adjusted by the bandwidth control section **120** to provide a revised correction signal **50** to the mixer **110**, the rake receiver **40**, and the data receiver **42**. This process is repeated until the complex error signal **122** output from the mixer **110** is at a minimum. It is desired to have the complex error signal **122** as small as possible; ideally it should be zero.

The despread pilot signal **17** is a known complex number that has zero phase. This complex number can be represented in two forms as shown in FIG. **6**: 1) Cartesian form; and 2) polar form. In Cartesian form, the real part is referred to as the in-phase component, (I-component), and the imaginary part is referred to as the quadrature component, (Q-component). The polar form includes a magnitude (m) and a phase angle (ϕ). To convert from Cartesian to polar form, the following equations are used:

$$\phi=\tan^{-1}(Q/I) \quad \text{Equation (1)}$$

$$m=\sqrt{I^2+Q^2} \quad \text{Equation (2)}$$

$$M=\sqrt{I^2+Q^2}$$

Referring back to FIG. **5**, the complex error signal **122** is processed by the normalizing unit **112**, which will be described in greater detail hereinafter. The normalized signal **124** is then input into the arctangent analyzer **114**. The arctangent analyzer **114** analyzes the normalized signal **124**, which is in Cartesian coordinate form, using an 8I-by-8Q arctangent processor to determine the phase ϕ of the complex number. The arctangent analyzer **114** uses the Cartesian I and Q components which are mapped to provide the phase ϕ of the complex number. Although this function may be implemented in real time using a microprocessor with associated memory, it would require a high-speed processor and a large amount of memory to accurately calculate.

Equations 1 and 2 are implemented using a lookup table **150** when finite resolution is acceptable. For example, if the I component is expected to be an integer between −10 and 10, and the Q component is expected to be an integer between −10 and 10, then the lookup table **150** shown in FIG. **7** may be implemented. The phase ϕ for any I and Q component pair may be obtained from the lookup table **150**. For example, if I=8.8 and Q=10.1, the values would first be quantized into the integers I=9 and Q=10, resulting in a phase value ϕ_{42} from the lookup table **150**. The arctangent analyzer **114** is preferably implemented with a lookup table **152** having eight I bins and eight Q bins, covering a range of possible I and Q values between −1.4 and +1.4, as shown in FIG. **8**. For example, if I=−0.8 and Q=0.9, the lookup table **152** will return a phase value of ϕ_{55}.

The size and complexity of lookup table **152** implemented within the arctangent analyzer **114** grows as the range of the values input into the arctangent analyzer **114** increases. Thus, if a wide range of values is permitted to be input into the arctangent analyzer **114**, the arctangent function increases in complexity and the lookup table **152** dramatically increases in size. Accordingly, in order to keep the implementation as simple as possible, the complex error signal **122** is normalized by the normalizing unit **112** prior to being input into the arctangent analyzer **114**. The normalizing unit **112** receives the complex error signal **122** from the mixer **110** and performs a "pseudonormalization" by dividing by the complex error signal **122** by the component, (I or Q), having the larger magnitude. Thus, the magnitude of the number output to the arctangent analyzer **114** will be between 1.0 and 1.414.

Alternatively, true normalization is performed, in which the normalizing unit **112** determines the magnitude of the complex error signal **122**, then divides the error signal **122** by the magnitude. The signal **124** output from the normalizing unit **112** would be complex number with a magnitude of 1 and a phase angle which must be determined by the arctangent analyzer **114**. Although pseudonormalizing the complex error signal **122** is not as optimal as normalization, pseudonormalization requires much less processing power and may be preferred in certain implementations where processing power is at a premium.

Since pseudonormalizing results in a complex number between 1.0 and 1.414, performing a pseudonormalization on the complex error signal **122** causes the resulting signal **124** to fall within a smaller input range of the domain of the lookup table **152**. Moreover, by quantizing the I and Q components into 8 bins each, the size of the lookup table **152** is limited to 64 bins, with resolution that is sufficient for the desired PLL performance.

The output from the arctangent analyzer **114** is a quantized phase angle of the complex error signal **122**. Since the pilot signal **17** is transmitted with zero phase angle, it is desired to adjust the quantized phase error signal **126** to have

an angle of zero degrees, (a phase of zero). The bandwidth control section **120** continually monitors the quantized phase error signal **126** and generates a control signal **130** to control the bandwidth of the PLL filter **116** based on the quantized phase error signal **126**. As will be explained in detail hereinafter, as the quantized phase error signal **126** approaches zero, the bandwidth of the PLL filter **116** decreases.

Referring back to FIG. **5**, the quantized phase error signal **126** is provided to two sections of the PLL **10**: 1) the PLL filter **116**; and 2) the bandwidth control section **120**. With respect to the PLL filter **116**, the bandwidth of the PLL filter **116** is continuously adjustable. The PLL filter **116** has a wider bandwidth when the quantized phase error signal **126** is large, and a narrow bandwidth when the quantized phase error signal **126** is small. The bandwidth of the PLL filter **116** is selectively and continuously controlled by the bandwidth control section **120** to provide a small steady-state PLL error.

As the bandwidth of the PLL filter **116** is narrowed, the high frequency components of the quantized phase error signal **126** are filtered out. Thus, by eliminating high frequency components, rapid variations in the quantized phase error signal **126** are eliminated and the output signal is smoothed. However, since a filter with a small bandwidth does not have the ability to track rapid variations in an input signal, filters with wide bandwidths are generally used for initial tracking and locking onto a signal.

Referring to FIG. **9**, the PLL filter **116** comprises a lag filter **140** and a lead filter **142**. The lag filter **140** receives two inputs: 1) the bandwidth control signal **130** from the bandwidth control section **120**; and 2) the quantized phase error signal **126** output from the arctangent analyzer **114**. The lag filter **140** has a Laplace transformation of

$$H(s)=a+b/s \qquad \text{Equation (3)}$$

where s is the complex number that is used as the kernel for the Laplace transform:

$$H(s)=\int_0^\infty h(t)e^{-st}dt, \qquad \text{Equation (4)}$$

and the coefficients a and b are both functions of the bandwidth (BW) as follows:

$$a=2\sqrt{2}\Pi\cdot BW, \qquad \text{Equation (5)}$$

$$b=(2\Pi\cdot BW)^2 \qquad \text{Equation (6)}$$

The lag filter **140** interrogates the quantized phase error signal **126** and generates an estimate of the RF carrier offset **144**. The RF carrier offset **144** is input into the lead filter **142** which integrates the RF carrier offset **144** to determine an error voltage **128** corresponding to the phase error.

The output of the PLL filter **116**, which is input into the VCO **118**, is the error voltage **128**. In response to the error voltage **128**, the VCO **118** outputs a corresponding correction signal **50** to the mixer **110**, the pilot rake receiver **40** and the data receiver **42**.

The bandwidth control section **120** will be explained in further detail with reference to FIG. **10**. The bandwidth control section **120** estimates the variance of the quantized phase error signal **126** and converts this into a dynamic bandwidth.

The bandwidth control section **120** comprises four processing units: a squaring unit **160**, a (leaky) integrator unit **162**, a bandwidth calculation unit **164** and a sample/hold unit **168**. The squaring unit **160** squares the quantized phase error signal **126**. The integrator **162**, which is a first order low-pass filter, then integrates and smoothes the squared signal **170**. The squaring unit **160** and the integrator **162** act together to estimate the standard deviation (squared), or variance, **172** of the quantized phase error signal **126**. This value **172** is then input into the bandwidth calculation unit **164**.

The bandwidth calculation unit **164** determines the desired bandwidth of the PLL filter **116** based upon the input value **172**. The operation of the bandwidth calculation unit **164** will be explained in detail with reference to FIG. **11**. As shown, the bandwidth calculation unit **164** utilizes a select transfer function **180** to correlate the input signal **172** to a desired output bandwidth **174**. The transfer function is defined by four parameters: 1)BW_{HI}—the widest bandwidth value; 2)BW_{LO}—the narrowest bandwidth; 3)$_{YHI}$—the highest value of the variance of the quantized phase error; and 4)$_{YLO}$—the lowest value of the variance of the quantized phase error. BW_{HI} is selected to produce the shortest initial lock-on time; typically 1000 Hz. The wider the bandwidth, the faster the initial lock-on period. However, if the bandwidth is too high, lock-on will never occur since the filter will attempt to track the noise. BW_{LO} is selected to provide the required PLL steady state error. Typically, 100 Hz provides 5 degree steady state error, which is acceptable for the present invention. $_{YHI}$ and $_{YLO}$ depend upon the input signal-to-noise ratio and the particular architecture and application. An initial estimate for $_{YLO}$ typically is obtained by operating the PLL **10** in an "ideal" mode (the PLL produces a perfect correction for each sample). An initial estimate for $_{YHI}$ is typically obtained by operating the PLL in the "worst case" mode (the PLL produces a random correction for each sample).

Preferably, the transfer function **180** comprises a linear portion **182** which correlates the input value **172** with the desired output bandwidth **174**. It is preferable to limit the linear portion **182** of the transfer function **180** to a range of phase error input values **172** and bandwidth output values **174** in order to simplify the operation of the transfer function unit **164**. For example, when the phase error input value **172** is A, the transfer function **180** will provide a desired bandwidth output **174** of B. The bandwidth calculation unit **164** may be implemented by a microprocessor which would dynamically calculate the bandwidth. Additionally, the microprocessor may be dynamically updated with different transfer functions depending upon the conditions of the system and the RF channel.

The bandwidth calculation unit **164** outputs the new bandwidth of the PLL filter **116**. This bandwidth **174** is input into the sample/hold unit **168**, which samples the bandwidth **174** and outputs a sampled bandwidth **130** to the PLL filter **116** every N symbols, where N is a predetermined number. A small value of N will provide better performance at the expense of increased processing. In the preferred embodiment, N=8. The sampled bandwidth **130** from the sample/hold unit **168** is input to the PLL filter **116**.

As shown in the simulation results in FIGS. **12A–D**, the use of a continuously adjustable PLL **10** greatly improves the performance of the receiver **20**. All four plots present data from the same simulation run. FIG. **12A** shows the carrier offset frequency estimate (in Hertz) provided by the output of the lag filter **144** as a function of time in seconds. At approximately 0.01 seconds, the average of the frequency estimate quickly reaches the true value of 7000 Hz, but since the bandwidth is wide, the estimate is still noisy. As the bandwidth begins to narrow, the frequency estimate becomes less noisy. At 0.02 seconds, the bandwidth has narrowed significantly, and there is very little noise in the frequency estimate.

FIG. 12B shows the phase correction (in degrees) provided by the output of the lead filter **142** as a function of time (in seconds). This correction varies widely until initial lock-on of the PLL **10** at 0.01 seconds. Since the bandwidth is still wide at this point, the correction varies. As the bandwidth is narrowed, the variation in the correction is reduced. At 0.02 seconds, the bandwidth has narrowed significantly and the variation is minimized.

FIG. 12C shows the bandwidth control signal (in Radians^2) as a function of time (in seconds), which is a measure of the variance of the phase error. After initial lock-on of the PLL **10**, the variance begins to decrease which, in turn, causes the dynamic bandwidth to narrow (see FIG. 12D). The variance continues to decrease as the PLL **10** improves its ability to estimate phase correction.

FIG. 12D shows the dynamic bandwidth (in Hertz) as a function of time (in seconds). The bandwidth is near its maximum of 1000 Hz up until initial lock-on of the PLL **10** at around 0.01 seconds. With lock-on, phase error is reduced, causing the bandwidth to begin narrowing. The bandwidth approaches it minimum of 100 Hz as the phase error continues to be reduced.

The process for determining the amount of phase error, determining an appropriate PLL **10** bandwidth, adjusting the PLL **10** bandwidth and controlling the VCO **118** to provide an updated correction signal **50** is summarized in FIG. **13**. After the pilot signal **17** has been received (step **200**) by the pilot rake receiver **40**, the pilot signal **17** is despread (step **202**) and corrected for channel distortion due to multipath reflections (step **204**). A complex error signal is produced (step **206**) and the error signal is normalized (step **208**) prior to quantizing the phase of the error signal (step **210**). The bandwidth control section **120** estimates the variance of the phase error (step **214**) and determines the desired PLL bandwidth to produce a correction signal (step **216**). The PLL filter **116** provides an estimate of the offset of the RF carrier signal and the phase error due to the carrier signal offset (step **212**) and provides a correction signal (step **218**) to the pilot rake receiver **40** and the data receiver **42**. In this manner, the bandwidth of the PLL filter **116** is continuously adjusted and refined as the magnitude of the error signal **126** output from the arctangent analyzer **114** decreases.

Although the invention has been described in part by making detailed reference to certain specific embodiments, such detail is intended to be instructive rather than restrictive. It will be appreciated by those skilled in the art that many variations may be made in the structure and mode of operation without departing from the spirit and scope of the invention as disclosed in the teachings herein. For example, the specific transfer function may be modified depending upon the RF channel to be analyzed and the current conditions of the system. Additionally, analysis of the quantized phase error signal may be performed using a different mathematical analysis while still providing a continuously updated PLL bandwidth signal. The analysis to be performed on the quantized phase error signal is typically a trade off between the amount of processing power required for the computational analysis versus the improvement in performance.

What is claimed is:

1. A receiver configured to receive a CDMA communication signal transmitted on an RF carrier frequency and to demodulate said RF carrier frequency to provide a received information signal; the receiver including components configured to correct phase errors in an information signal which has been modulated on said RF carrier frequency; the receiver comprising:

circuitry including an adjustable bandwidth filter component configured to generate a mixing signal and to combine said mixing signal with said information signal to produce a correction signal;

an analyzer configured to analyze the phase of said correction signal and to generate an error signal based on the deviation of the analyzed phase from a reference phase; and

a bandwidth controller configured to recursively adjust the phase of said correction signal such that the phase of said correction signal is substantially equal to said reference phase; said bandwidth controller configured to control the bandwidth of the adjustable bandwidth filter component by selecting a bandwidth based on the error signal generated by said analyzer.

2. The receiver of claim **1** wherein said correction signal comprises an I (in-phase) component and a Q (quadrature) component, and said analyzer further comprises a look-up table for determining the phase of said correction signal; said look-up table accepting said correction signal and generating said error signal.

3. The receiver of claim **2** wherein said analyzer further comprises a normalizer for determining the magnitude of the I component and the magnitude of the Q component, selecting the larger of said magnitudes, and dividing both of said magnitudes by said larger magnitude to output a pseudo-normalized correction signal.

4. The receiver of claim **3** wherein said bandwidth controller further includes a bandwidth calculation mechanism which outputs a bandwidth signal based upon a transfer function.

5. The receiver of claim **1** further comprising a rake receiver with a plurality of independent rake elements collectively acting as a filter which compensates for channel distortion due to multipath effects.

6. The receiver of claim **5** wherein said correction signal comprises an I (in-phase) component and a Q (quadrature) component, and said analyzer further comprises a look-up table for determining the phase of said correction signal; said look-up table accepting said correction signal and generating said error signal.

7. The receiver of claim **4** wherein said bandwidth controller further includes a bandwidth calculation mechanism which accepts said pseudonormalized correction signal and outputs a bandwidth signal based upon a transfer function.

8. The receiver of claim **7** wherein said bandwidth controller further includes a voltage controlled oscillator configured to implement bandwidth adjustments.

9. The receiver of claim **8** wherein said transfer function comprises a continuous function.

10. The receiver of claim **2** wherein said look-up table comprises a matrix of at least eight discrete in-phase component values by at least eight discrete quadrature component values.

11. The receiver of claim **2** wherein said analyzer further comprises a normalization mechanism which determines the magnitude of the correction signal and divides said correction signal by said magnitude to output a normalized correction signal.

12. A method for use with a receiver equipped to receive a CDMA communication signal transmitted on an RF carrier frequency, demodulate said RF carrier frequency to provide a received information signal, and correct phase errors in an information signal which has been modulated on said RF carrier frequency; the method comprising the steps of:

generating a mixing signal and combining said mixing signal with said information signal to produce a correction signal based on filtering at a selected bandwidth;

analyzing the phase of said correction signal;

generating an error signal based on the deviation of the analyzed phase from a reference phase;

recursively adjusting the phase of said correction signal such that the phase of said correction signal is substantially equal to said reference phase by adjusting the selected bandwidth used to produce said correction signal based on said error signal.

13. The method of claim **12** wherein said correction signal comprises an I (in-phase) component and a Q (quadrature) component, the method further comprising the step of using a look-up table to determine the phase of said correction signal and generating said error signal in response thereto.

14. The method of claim **13** further comprising the steps of determining the magnitude of the I component and the magnitude of the Q component, selecting the larger of said magnitudes, and dividing both of said magnitudes by said larger magnitude to output a pseudonormalized correction signal.

15. The method of claim **12** wherein the recursively adjusting the phase of said correction signal includes outputting a bandwidth signal based upon a transfer function.

16. The method of claim **12** further including the step of compensating for channel distortion due to multipath effects.

17. The method of claim **14** wherein the recursively adjusting the phase of said correction signal includes generating a bandwidth signal based upon a transfer function.

18. The method of claim **17** wherein said transfer function comprises a continuous function.

19. The method of claim **13** further including the steps of determining the magnitude of the correction signal and dividing said correction signal by said magnitude to output a normalized correction signal.

20. In a CDMA communication system, a method for correcting an incoming signal for phase errors, the system including a receiver having an adjustable bandwidth phase-locked loop (PLL), the method comprising the steps of:

(a) comparing the incoming signal with a correction signal to produce an error signal;

(b) normalizing the error signal into a normalized signal;

(c) analyzing the normalized signal to determine a quantized phase error signal;

(d) generating a control signal in response to the quantized phase error signal;

(e) adjusting the bandwidth of a PLL filter in response to the quantized phase error signal and the control signal, wherein the PLL filter generates an error voltage;

(f) sending the error voltage to a voltage controlled oscillator to generate the correction signal; and

(g) repeating steps (a) through (f) while the incoming signal is being received.

21. The method of claim **20**, wherein the normalizing step is performed by:

determining an in-phase (I) and a quadrature (Q) component of the error signal;

identifying which of the I and Q components has the largest magnitude;

dividing the error signal by the I component if the I component has the largest magnitude; otherwise, dividing the error signal by the Q component.

22. The method of claim **21** including the step of determining the quantized phase error signal by using the I and Q components to index a lookup table.

23. The method of claim **20**, wherein the generating step includes:

estimating the variance of the quantized phase error signal; and

outputting a bandwidth control signal based on the variance using a transfer function.

24. An adjustable bandwidth phase-locked loop for use in a CDMA communication system to correct an incoming signal for phase errors, wherein the incoming signal is modulated on an RF carrier signal, said phase-locked loop comprising:

a comparison mechanism for comparing the incoming signal with a correction signal, said comparison mechanism producing a complex error signal having an I (in phase) component and a Q (quadrature) component;

a processing mechanism for normalizing the complex error signal and producing a quantized phase error signal;

a phase-locked loop filter having an adjustable bandwidth, said phase-locked loop filter generating an error voltage in response to the quantized phase error signal;

a voltage controlled oscillator for generating a correction signal in response to the error voltage; and

a bandwidth adjustment mechanism for controlling the bandwidth of said phase-locked loop filter, said bandwidth adjustment mechanism generating a control signal for controlling said phase-locked loop filter in response the quantized phase error signal.

25. The adjustable bandwidth phase-locked loop of claim **24**, wherein said phase-locked loop filter comprises:

a lag filter for receiving the control signal and the quantized phase error signal as inputs and, in response thereto, generating estimates of phase error relative to a predetermined value; and

a lead filter for generating an error voltage in response to the phase error estimates.

* * * * *

UNITED STATES PATENT AND TRADEMARK OFFICE

Commissioner for Patents
United States Patent and Trademark Office
P.O. Box 1450
Alexandria, VA 22313-1450
www.uspto.gov

DANIEL P. MCCARTHY, ESQ.
PARSONS BEHLE & LATIMER
SUITE 1800
201 SOUTH MAIN STREET
SALT LAKE CITY, UT 84111

COPY MAILED

JUN 17 2004

OFFICE OF PETITIONS

In re Application of :
Pope, et al. :
Application No. 10/643,806 : ON PETITION
Filed: August 18, 2003 :
Attorney Docket No. :
05261.058/6069.2P

This is a decision on papers styled "Petition for Filing Date" filed on March 22, 2004, which is being treated as a petition under 37 CFR 1.53, requesting that the above-identified application be accorded a filing date of August 18, 2003, including Figures 2R-1, 2R-2, 2S-1, 2S-2, 2T-1, 2T-2, 3AB, 4A-D, 5A-G, 6A-1, 6A-2, 6B-1, 6B-2, 7AB, 8AB and 9-13, as described in the specification.

The application was filed on April 18, 2003. However, on February 3, 2004, the Office of Initial Patent Examination (OIPE) mailed a "Notice Of Omitted Item(s)" (Notice) that stated the application had been accorded a filing date, but Figures 2R-1, 2R-2, 2S-1, 2S-2, 2T-1, 2T-2, 3AB, 4A-D, 5A-G, 6A-1, 6A-2, 6B-1, 6B-2, 7AB, 8AB and 9-13, as described in the specification appear to have been omitted.

In response, on March 22, 2004, the instant petition and thirty (30) sheets of drawings that contain Figures 2R-1, 2R-2, 2S-1, 2S-2, 2T-1, 2T-2, 3AB, 4A-D, 5A-G, 6A-1, 6A-2, 6B-1, 6B-2, 7AB, 8AB and 9-13, as described in the specification, were submitted. The petition states, "Enclosed for your review is a copy of the postcard receipt by the U.S. Patent and Trademark Office with a filing date and serial number indicating Thirty (30) Sheets of Drawings were received with the Specification. ... Each of these documents was originally submitted on August 18, 2003 with the patent application." However, the aforementioned copy of the postcard receipt cannot be located in the application file after a thorough review.

As such, petitioner's argument is not persuasive. The Patent and Trademark Office (Office) file is the official record of the papers originally filed in this application. A review of the official file reveals that eight (8) pages of drawings were filed on August 18, 2003. The pages containing Figures 2R-1, 2R-2, 2S-1, 2S-2, 2T-1, 2T-2, 3AB, 4A-D, 5A-G, 6A-1, 6A-2, 6B-1, 6B-2, 7AB, 8AB and 9-13, were not filed on August 18, 2003, since no such pages are present in the file. An applicant alleging that a paper was filed in the Office and later misplaced has the burden of proving the allegation by a preponderance of the evidence. Petitioner has not submitted any evidence to support petitioner's allegation.

The Office has a well established and well publicized practice of providing a receipt for papers filed in the Office to any applicant desiring a receipt. The practice requires that any paper for which a receipt is desired be filed in the Office with a self-addressed postcard identifying the paper. A postcard receipt which itemizes and properly identifies the papers which are being filed serves as prima facie evidence of receipt in the Office of all the items listed thereon on the date stamped thereon by the Office. See MPEP 503.

A copy of a postcard receipt that would indicate receipt of the omitted figures has not been submitted. If petitioner has a postcard receipt date stamped by the Office that indicates receipt of Figures 2R-1, 2R-2, 2S-1, 2S-2, 2T-1, 2T-2, 3AB, 4A-D, 5A-G, 6A-1, 6A-2, 6B-1, 6B-2, 7AB, 8AB and 9-13 (or additional pages of drawings), on August 18, 2003, then the postcard receipt or a copy thereof should be supplied.

At the present time, the petition must be dismissed. However, this decision is made without prejudice to reconsideration. If petitioner has a postcard receipt acknowledging receipt of Figures 2R-1, 2R-2, 2S-1, 2S-2, 2T-1, 2T-2, 3AB, 4A-D, 5A-G, 6A-1, 6A-2, 6B-1, 6B-2, 7AB, 8AB and 9-13 (or additional pages of drawings), on August 18, 2003, the postcard receipt or a copy thereof should be supplied, accompanied by a letter requesting reconsideration of this decision. No additional petition fee is required for such a request.

Any request for reconsideration should be filed within **TWO MONTHS** of the date of this decision in order to be considered timely. This time period may not be extended pursuant to 37 CFR 1.136.

Further correspondence with respect to this matter should be addressed as follows:

By mail: Mail Stop Petition
Commissioner for Patents
Box 1450
Alexandria, VA 22313

By FAX: (703) 872-9306
Attn: Office of Petitions

By hand: Customer Service Window
2011 South Clark Place
Crystal Plaza Two (left side entrance of building)
Arlington, VA

The application will maintain the August 18, 2003 filing date, and the application papers (i.e. the original disclosure of the invention) will include only those application papers present in the USPTO on the filing date.

The application will be forwarded to The Office of Initial Patent Examination for further processing.

Telephone inquiries should be directed to the undersigned at (703) 306-9200.

Edward J. Tannouse
Petitions Attorney
Office of Petitions
United States Patent and Trademark Office

UNITED STATES PATENT AND TRADEMARK OFFICE

Commissioner for Patents
United States Patent and Trademark Office
P.O. Box 1450
Alexandria, VA 22313-1450
www.uspto.gov

DANIEL P. MCCARTHY, ESQ.
PARSONS BEHLE & LATIMER
SUITE 1800
201 SOUTH MAIN STREET
SALT LAKE CITY, UT 84111

COPY MAILED

JUL 21 2004

OFFICE OF PETITIONS

ON PETITION

In re Application of :
Pope, et al. :
Application No. 10/643,806 :
Filed: August 18, 2003 :
Attorney Docket No. :
05261.058/6069.2P

This is a decision on papers styled "Second Petition for Filing Date" filed on June 30, 2004, which is being treated as a renewed petition under 37 CFR 1.53, requesting that the above-identified application be accorded a filing date of August 18, 2003, including Figures 2R-1, 2R-2, 2S-1, 2S-2, 2T-1, 2T-2, 3AB, 4A-D, 5A-G, 6A-1, 6A-2, 6B-1, 6B-2, 7AB, 8AB and 9-13, as described in the specification.

The application was filed on April 18, 2003. However, on February 3, 2004, the Office of Initial Patent Examination (OIPE) mailed a "Notice Of Omitted Item(s)" (Notice) that stated the application had been accorded a filing date, but Figures 2R-1, 2R-2, 2S-1, 2S-2, 2T-1, 2T-2, 3AB, 4A-D, 5A-G, 6A-1, 6A-2, 6B-1, 6B-2, 7AB, 8AB and 9-13, as described in the specification appear to have been omitted.

The instant renewed petition and thirty (30) sheets of drawings that contain Figures 2R-1, 2R-2, 2S-1, 2S-2, 2T-1, 2T-2, 3AB, 4A-D, 5A-G, 6A-1, 6A-2, 6B-1, 6B-2, 7AB, 8AB and 9-13, as described in the specification, were submitted on June 30, 2004. The papers were accompanied by a copy of applicant's postcard receipt that acknowledges receipt of thirty (30) sheets of drawings on August 18, 2003. A review of the application file indicates the presence of eight (8) sheets of drawings (filed August 18, 2003). It is assumed that the missing sheets of drawings containing Figures 2R-1, 2R-2, 2S-1, 2S-2, 2T-1, 2T-2, 3AB, 4A-D, 5A-G, 6A-1, 6A-2, 6B-1, 6B-2, 7AB, 8AB and 9-13, as described in the specification, were misplaced by the Office.

In view of the above, the petition is granted.

The $130.00 petition fee will be refunded to deposit account no. 50-0581.

This application will be returned to OIPE for further processing with a filing date of August 18, 2003, using the additional sheets of drawings, which include Figures 2R-1, 2R-2, 2S-1, 2S-2, 2T-1, 2T-2, 3AB, 4A-D, 5A-G, 6A-1, 6A-2, 6B-1, 6B-2, 7AB, 8AB and 9-13, as described in the specification, supplied on June 30, 2004.

Telephone inquiries concerning this matter may be directed to the undersigned at (703) 306-9200.

Edward J. Tannouse
Petitions Attorney
Office of Petitions
United States Patent and Trademark Office

UNITED STATES PATENT AND TRADEMARK OFFICE

Commissioner for Patents
United States Patent and Trademark Office
P.O. Box 1450
Alexandria, VA 22313-1450
www.uspto.gov

COPY MAILED

MAY 19 2008

OFFICE OF PETITIONS

RANDALL B. BATEMAN
BATEMAN IP LAW GROUP
8 EAST BROADWAY, SUITE 550
PO BOX 1319
SALT LAKE CITY UT 84110

In re Application of :
Pope, et al. :
Application No.: 10/643,806 : DECISION
Filing Date: 18 August, 2003 :
Attorney Docket No. 05261.058/6069.2 P :

This is a decision on the petition filed on 17 October, 2007, to revive an application under 37 C.F.R. §1.137(b) as having been abandoned due to unintentional delay.

The Office regrets the delay in addressing this matter, however, the instant petition was presented to the attorneys in the Office of Petitions only at this writing.

The petition under 37 C.F.R. §1.137(b) is **GRANTED**.

As to the Allegations
of Unintentional Delay

The requirements of a grantable petition pursuant to 37 C.F.R. §1.137(b) are the petition and fee therefor, a reply, a proper statement of unintentional delay under the regulation, and, where applicable, a terminal disclaimer and fee. (However, it does not appear that a terminal disclaimer and fee are due here.)

It appears that Petitioner has satisfied the requirements of the regulation, as set forth below:

BACKGROUND

The record reflects that:

Petitioner failed to reply timely and properly to the non-final Office action mailed on 18 August, 2006, with reply due absent extension of time on or before 18 November, 2006.

The application went abandoned by operation of law after midnight 18 November, 2006.

The Office mailed a Notice of Abandonment on 16 March, 2007.

On 17 October, 2007, Petitioner filed the instant petition (with fee) alleging unintentional delay under 37 C.F.R. §1.137(b), included therewith, *inter alia*, a reply in the form of an amendment, and made the statement of unintentional delay (submitted by an authorized officer of the averred assignee, with revocation and power of attorney and certificate pursuant to 37 C.F.R. §3.73(b)).

The availability of applications and application papers online to applicants/practitioners who diligently associate their Customer Number with the respective application(s) now provides an applicant/practitioner on-demand information as to events/transactions in an application. Thus, now if one wishes to know the progress in and/or status of an application or the accuracy of the data therein, one need only look at the file online.

Out of an abundance of caution, Petitioners always are reminded that those registered to practice *and* all others who make representations before the Office must inquire into the underlying facts of representations made to the Office and support averments with the appropriate documentation–since all owe to the Office the continuing duty to disclose.[1]

STATUTES, REGULATIONS

Congress has authorized the Commissioner to "revive an application if the delay is shown to the satisfaction of the Commissioner to have been "unavoidable." 35 U.S.C. §133 (1994).

The regulations at 37 C.F.R. §1.137(a) and (b) set forth the requirements for a Petitioner to revive a previously unavoidably or unintentionally, respectively, abandoned application.[2],[3]

---

[1] See supplement of 17 June, 1999. The Patent and Trademark Office is relying on petitioner's duty of candor and good faith and accepting a statement made by Petitioner. See Changes to Patent Practice and Procedure, 62 Fed. Reg. at 53160 and 53178, 1203 Off. Gaz. Pat. Office at 88 and 103 (responses to comments 64 and 109)(applicant obligated under 37 C.F.R. §10.18 to inquire into the underlying facts and circumstances when providing statements to the Patent and Trademark Office). See specifically, the regulations at 37 C.F.R. §10.18.

[2] See: Changes to Patent Practice and Procedure; Final Rule Notice, 62 Fed. Reg. at 53158-59 (October 10, 1997), 1203 Off. Gaz. Pat. Office at 86-87 (October 21, 1997).

[3] The language of 35 U.S.C. §133 and 37 C.F.R. §1.137(a) is clear, unambiguous, and without qualification: the delay in tendering the reply to the outstanding Office action, as well as filing the first petition seeking revival, must have been unavoidable for the reply now to be accepted on petition. (Therefore, by example, an unavoidable delay in the payment of the Filing Fee might occur if a reply is shipped by the US Postal Service, but due to catastrophic accident, the delivery is not made.) Delays in responding properly raise the question whether delays are unavoidable. Where there is a question whether the delay was unavoidable, Petitioners must meet the burden of establishing that the delay was

CONCLUSION

The instant petition under 37 C.F.R. §1.137(b) is **granted**.

The instant application is released to Technology Center/AU 3682 for further processing in due course.

Petitioner may find it beneficial to view Private PAIR within a fortnight of the instant decision to ensure that the revival has been acknowledged by the Technology Center/AU in response to this decision. It is noted that all inquiries with regard to any failure of that change in status should be directed to the Technology Center/AU OPAP where that change of status must be effected—that does not occur in the Office of Petitions.

While telephone inquiries regarding this decision may be directed to the undersigned at (571) 272-3214, it is noted that all practice before the Office is in writing (see: 37 C.F.R. §1.2[4]) and the proper authority for action on any matter in this regard are the statutes (35 U.S.C.), regulations (37 C.F.R.) and the commentary on policy (MPEP). Therefore, no telephone discussion may be controlling or considered authority for Petitioner's action(s).

John J. Gillon, Jr.
Senior Attorney
Office of Petitions

unavoidable within the meaning of 35 U.S.C. §133 and 37 C.F.R. §1.137(a) And the Petitioner must be diligent in attending to the matter. Failure to do so does not constitute the care required under Pratt, and so cannot satisfy the test for diligence and due care. (By contrast, unintentional delays are those that do not satisfy the very strict statutory and regulatory requirements of unavoidable delay, and also, by definition, are not intentional.))

[4] The regulations at 37 C.F.R. §1.2 provide:

§1.2 Business to be transacted in writing.

All business with the Patent and Trademark Office should be transacted in writing. The personal attendance of applicants or their attorneys or agents at the Patent and Trademark Office is unnecessary. The action of the Patent and Trademark Office will be based exclusively on the written record in the Office. No attention will be paid to any alleged oral promise, stipulation, or understanding in relation to which there is disagreement or doubt.

UNITED STATES PATENT AND TRADEMARK OFFICE

Commissioner for Patents
United States Patent and Trademark Office
P.O. Box 1450
Alexandria, VA 22313-1450
www.uspto.gov

Paper No. 080204

AUG 27 2004

TOWNSEND AND TOWNSEND AND CREW, LLP
TWO EMBARCADERO CENTER
EIGHTH FLOOR
SAN FRANCISCO, CA 94111-3834

In re Application of:
FRANK CHETHIK
Serial No.: 10/643,817
Filed: August 18, 2003
Attorney Docket No.: **040092-023400US**

DECISION ON REQUEST TO WITHDRAW FROM RECORD

This is a decision on the request to withdraw as attorney of record under 37 C.F.R. § 1.36, filed March 18, 2004.

The request is **DISMISSED** as moot.

A review of the application file record reveals a proper revocation and power of attorney to the attorneys of McDermott, Will & Emery was filed on April 6, 2004. As such, the power of attorney for the attorneys and agents requesting withdrawal has already been revoked. Accordingly, the present request is moot, and must be dismissed.

All future communications from the Office will continue to be directed to the below-listed address until otherwise notified by applicant.

Inquiries related to this decision should be directed to Jose G. Dees at (571) 272-1569.

Jose G. Dees, Special Programs Examiner
Technology Center 2800
Semiconductors, Electrical and Optical
Systems and Components

cc: MARK J. ITRI
MCDERMOTT, WILL & EMERY
18191 VON KARMAN AVE., SUITE 400
IRVINE, CA 92612-0187

UNITED STATES PATENT AND TRADEMARK OFFICE

Commissioner for Patents
United States Patent and Trademark Office
P.O. Box 1450
Alexandria, VA 22313-1450
www.uspto.gov

KEELING PATENTS AND TRADEMARKS
3310 KATY FREEWAY, SUITE 100
HOUSTON TX 77007

MAILED

JUN 0 8 2009

OFFICE OF PETITIONS

In re Application of	:	
Nelson et al.	:	
Application No. 10/643824	:	DECISION ON PETITION
Filing or 371(c) Date: 08/18/2003	:	UNDER 37 CFR 1.78(a)(3)
Attorney Docket No. 152.001	:	

This is a decision on the "Petition to Accept an Unintentionally Delayed Claim Under 35 U.S.C. §§ 120 and 365(c)," filed April 16, 2009, to claim the benefit of priority to prior-filed international Application No. PCT/GB02/00705. The petition is properly treated under 37 CFR § 1.78(a)(3).

The petition is **GRANTED.**

A petition for acceptance of a claim for late priority under 37 CFR 1.78(a)(3) is only applicable to those applications filed on or after November 29, 2000. Further, the petition is appropriate only after the expiration of the period specified in 37 CFR 1.78(a)(2)(ii). In addition, the petition under 37 CFR 1.78(a)(3) must be accompanied by:

(1) the reference required by 35 U.S.C. § 120 and 37 CFR 1.78(a)(2)(i) of the prior-filed application, unless previously submitted;
(2) the surcharge set forth in § 1.17(t); and
(3) a statement that the entire delay between the date the claim was due under 37 CFR 1.78(a)(2)(ii) and the date the claim was filed was unintentional. The Director may require additional information where there is a question whether the delay was unintentional.

It is noted that 37 CFR § 1.78(a)(3) requires a statement that the entire delay between the date the claim was due under 37 CFR § 1.78(a)(2)(ii) and the date the claim was filed was unintentional. Since the statement appearing in the petition varies from the required language, the statement is being construed as the statement required by 37 CFR §1.78(a)(3). If this is not a correct reading of the statement appearing in the petition, petitioner should promptly notify the Office.

All of the above requirements having been satisfied, the late claim for priority under 35 U.S.C. §§ 120 and 365(c) is accepted as being unintentionally delayed.

The granting of the petition to accept the delayed benefit claim to the prior-filed application under 37 CFR 1.78(a)(3) should not be construed as meaning that the application is entitled to the benefit of the prior-filed application. In order for the application to be entitled to the benefit of the prior-filed application, all other requirements under 35 U.S.C. §§ 120 and 365(c) and 37 CFR 1.78(a)(1) and (a)(2) must be met. Similarly, the fact that the corrected Filing Receipt accompanying this decision on petition includes the prior-filed application should not be construed as meaning that applicant is entitled to the claim for benefit of priority to the prior-filed application noted thereon. Accordingly, the examiner will, in due course, consider this benefit claim and determine whether the application is entitled to the benefit of the earlier filing date.

A corrected Filing Receipt, which includes the priority claim to the prior-filed application, accompanies this decision on petition.

Any inquiries concerning this decision may be directed to Attorney Derek Woods at (571) 272-3232. All other inquiries concerning either the examination procedures or status of the application should be directed to the Technology Center.

This application is being forwarded to the examiner of Technology Center Art Unit 3771 for consideration of applicant's entitlement to claim benefit of priority under 35 U.S.C. §§ 120 and 365(c) to the above-noted, prior-filed PCT application.

Anthony Knight
Supervisor
Office of Petitions

ATTACHMENT: Corrected Filing Receipt

UNITED STATES PATENT AND TRADEMARK OFFICE

UNITED STATES DEPARTMENT OF COMMERCE
United States Patent and Trademark Office
Address: COMMISSIONER FOR PATENTS
P.O. Box 1450
Alexandria, Virginia 22313-1450
www.uspto.gov

APPLICATION NUMBER	FILING or 371(c) DATE	GRP ART UNIT	FIL FEE REC'D	ATTY.DOCKET.NO	TOT CLAIMS	IND CLAIMS
10/643,824	08/18/2003	3771	1241	152.001	63	3

CONFIRMATION NO. 5165

CORRECTED FILING RECEIPT

9809
KEELING PATENTS AND TRADEMARKS
3310 KATY FREEWAY, SUITE 100
HOUSTON, TX 77007

OC000000036275905

Date Mailed: 06/02/2009

Receipt is acknowledged of this non-provisional patent application. The application will be taken up for examination in due course. Applicant will be notified as to the results of the examination. Any correspondence concerning the application must include the following identification information: the U.S. APPLICATION NUMBER, FILING DATE, NAME OF APPLICANT, and TITLE OF INVENTION. Fees transmitted by check or draft are subject to collection. Please verify the accuracy of the data presented on this receipt. **If an error is noted on this Filing Receipt, please submit a written request for a Filing Receipt Correction. Please provide a copy of this Filing Receipt with the changes noted thereon. If you received a "Notice to File Missing Parts" for this application, please submit any corrections to this Filing Receipt with your reply to the Notice. When the USPTO processes the reply to the Notice, the USPTO will generate another Filing Receipt incorporating the requested corrections**

Applicant(s)

Ernest Peter Nelson, Wallasey, UNITED KINGDOM, Deceased;
Jeanette Rae Nelson, Wallasey, UNITED KINGDOM, Legal Representative;
Antony John Seaney, Redhill, UNITED KINGDOM;

Power of Attorney:
Kenneth Keeling--31842

Domestic Priority data as claimed by applicant

This application is a CON of PCT/GB02/00705 02/19/2002

Foreign Applications
UNITED KINGDOM 0103893.4 02/19/2001
UNITED KINGDOM 0119120.4 08/01/2001

If Required, Foreign Filing License Granted: 11/12/2003

The country code and number of your priority application, to be used for filing abroad under the Paris Convention, is **US 10/643,824**

Projected Publication Date: Not Applicable

Non-Publication Request: No

Early Publication Request: No
**** SMALL ENTITY ****

Title

Leg ulcer, lymphoedema and DVT vibratory treatment and device

Preliminary Class

601

PROTECTING YOUR INVENTION OUTSIDE THE UNITED STATES

Since the rights granted by a U.S. patent extend only throughout the territory of the United States and have no effect in a foreign country, an inventor who wishes patent protection in another country must apply for a patent in a specific country or in regional patent offices. Applicants may wish to consider the filing of an international application under the Patent Cooperation Treaty (PCT). An international (PCT) application generally has the same effect as a regular national patent application in each PCT-member country. The PCT process **simplifies** the filing of patent applications on the same invention in member countries, but **does not result** in a grant of "an international patent" and does not eliminate the need of applicants to file additional documents and fees in countries where patent protection is desired.

Almost every country has its own patent law, and a person desiring a patent in a particular country must make an application for patent in that country in accordance with its particular laws. Since the laws of many countries differ in various respects from the patent law of the United States, applicants are advised to seek guidance from specific foreign countries to ensure that patent rights are not lost prematurely.

Applicants also are advised that in the case of inventions made in the United States, the Director of the USPTO must issue a license before applicants can apply for a patent in a foreign country. The filing of a U.S. patent application serves as a request for a foreign filing license. The application's filing receipt contains further information and guidance as to the status of applicant's license for foreign filing.

Applicants may wish to consult the USPTO booklet, "General Information Concerning Patents" (specifically, the section entitled "Treaties and Foreign Patents") for more information on timeframes and deadlines for filing foreign patent applications. The guide is available either by contacting the USPTO Contact Center at 800-786-9199, or it can be viewed on the USPTO website at http://www.uspto.gov/web/offices/pac/doc/general/index.html.

For information on preventing theft of your intellectual property (patents, trademarks and copyrights), you may wish to consult the U.S. Government website, http://www.stopfakes.gov. Part of a Department of Commerce initiative, this website includes self-help "toolkits" giving innovators guidance on how to protect intellectual property in specific countries such as China, Korea and Mexico. For questions regarding patent enforcement issues, applicants may call the U.S. Government hotline at 1-866-999-HALT (1-866-999-4158).

LICENSE FOR FOREIGN FILING UNDER

Title 35, United States Code, Section 184

Title 37, Code of Federal Regulations, 5.11 & 5.15

GRANTED

The applicant has been granted a license under 35 U.S.C. 184, if the phrase "IF REQUIRED, FOREIGN FILING LICENSE GRANTED" followed by a date appears on this form. Such licenses are issued in all applications where the conditions for issuance of a license have been met, regardless of whether or not a license may be required as

set forth in 37 CFR 5.15. The scope and limitations of this license are set forth in 37 CFR 5.15(a) unless an earlier license has been issued under 37 CFR 5.15(b). The license is subject to revocation upon written notification. The date indicated is the effective date of the license, unless an earlier license of similar scope has been granted under 37 CFR 5.13 or 5.14.

This license is to be retained by the licensee and may be used at any time on or after the effective date thereof unless it is revoked. This license is automatically transferred to any related applications(s) filed under 37 CFR 1.53(d). This license is not retroactive.

The grant of a license does not in any way lessen the responsibility of a licensee for the security of the subject matter as imposed by any Government contract or the provisions of existing laws relating to espionage and the national security or the export of technical data. Licensees should apprise themselves of current regulations especially with respect to certain countries, of other agencies, particularly the Office of Defense Trade Controls, Department of State (with respect to Arms, Munitions and Implements of War (22 CFR 121-128)); the Bureau of Industry and Security, Department of Commerce (15 CFR parts 730-774); the Office of Foreign AssetsControl, Department of Treasury (31 CFR Parts 500+) and the Department of Energy.

NOT GRANTED

No license under 35 U.S.C. 184 has been granted at this time, if the phrase "IF REQUIRED, FOREIGN FILING LICENSE GRANTED" DOES NOT appear on this form. Applicant may still petition for a license under 37 CFR 5.12, if a license is desired before the expiration of 6 months from the filing date of the application. If 6 months has lapsed from the filing date of this application and the licensee has not received any indication of a secrecy order under 35 U.S.C. 181, the licensee may foreign file the application pursuant to 37 CFR 5.15(b).

UNITED STATES PATENT AND TRADEMARK OFFICE

UNITED STATES DEPARTMENT OF COMMERCE
United States Patent and Trademark Office
Address: COMMISSIONER FOR PATENTS
P.O. Box 1450
Alexandria, Virginia 22313-1450
www.uspto.gov

KEELING PATENTS AND TRADEMARKS, LLC
3310 KATY FREEWAY, 2nd Floor
HOUSTON, TX 77007

Mail Date: 04/20/2010

Applicant	: Ernest Peter Nelson	: DECISION ON REQUEST FOR
Patent Number	: 7615018	: RECALCULATION of PATENT
Issue Date	: 11/10/2009	: TERM ADJUSTMENT IN VIEW
Appliction No	: 10/643,824	: OF WYETH AND NOTICE OF INTENT TO
Filed	: 08/18/2003	: ISSUE CERTIFICATE OF CORRECTION
		:

The Request for Recalculation is **GRANTED** to the extent indicated.

The patent term adjustment has been determined to be **827** days. The USPTO will *sua sponte* issue a certificate of correction reflecting the amount of PTA days determined by the recalculation.

Prior to the issuance of the certificate of correction, the USPTO will afford patentee an opportunity to be heard and request reconsideration. Accordingly, patentee has **one month or thirty (30) days**, whichever is longer, to file a request for reconsideration of this patent term adjustment calculation. See 35 U.S.C. 154(b)(3)(B)(ii) and 37 CFR 1.322(a)(4). No extensions of time will be granted under 37 CFR 1.136.

Patentee should use document code PET.OP if electronically filing a request for reconsideration of this patent term adjustment calculation. The patentee must also include the information required by 37 CFR 1.705(b)(2) and the fee required by 37 CFR 1.18(e). If patentee does not file a timely request for reconsideration of this patent term adjustment calculation including the information required by 37 CFR 1.705(b)(2) and the fee required by 37 CFR 1.18(e), the USPTO will issue a certificate of correction reflecting the PTA determination noted above.

Patentee should be aware that in order to preserve the right to review in the United States District Court for the District of Columbia of the USPTO patent term adjustment determination, patentee must ensure that he or she also take the steps required under 35 U.S.C. 154(b)(4)(A) in a timely manner. Nothing in the request for recalculation should be construed as providing an alternative time frame for commencing a civil action under 35 U.S.C. 154(b)(4)(A).

Any questions concerning this decision should be directed to the Office of Patent Legal Administration at 571-272-7702.

UNITED STATES PATENT AND TRADEMARK OFFICE

COMMISSIONER FOR PATENTS
UNITED STATES PATENT AND TRADEMARK OFFICE
P.O. BOX 1450
ALEXANDRIA, VA 22313-1450
www.uspto.gov

THOMAS D. ROGERSON
ROHM AND HAAS COMPANY
100 INDEPENDENCE MALL WEST
PHILADELPHIA, PA 19106

COPY MAILED

FEB 02 2004

OFFICE OF PETITIONS

In re Application of :
John Paul Sari et al :
Application No. 10/643,833 : ON PETITION
Filed: August 19, 2003 :
Attorney Docket No. A01411 :

This is in response to the petition under 37 CFR 1.47(a), filed January 15, 2004.

The petition is dismissed.

Rule 47 applicant is given TWO MONTHS from the mailing date of this decision to reply, correcting the below-noted deficiencies. Any reply should be entitled "Request for Reconsideration of Petition Under 37 CFR 1.47(a)," and should only address the deficiencies noted below, except that the reply may include an oath or declaration executed by the non-signing inventor. **FAILURE TO RESPOND WILL RESULT IN ABANDONMENT OF THE APPLICATION.** Any extensions of time will be governed by 37 CFR 1.136(a).

A grantable petition under 37 CFR 1.47(a) requires: (1) proof that the non-signing inventor cannot be reached or refuses to sign the oath or declaration after having been presented with the application papers (specification, claims and drawings); (2) an acceptable oath or declaration in compliance with 35 U.S.C. §§ 115 and 116; (3) the petition fee; and (4) a statement of the last known address of the non-signing inventor. Applicant lacks item (2) set forth above.

As to item (2) above, the declaration lacks compliance with 37 CFR 1.63(a)(2) in that the declaration does not list all the named inventors. Petitioner's attention is directed to MPEP Section 602, which states: "Where joint inventors execute separate oaths or declarations, each oath or declaration should make reference to the fact that the affiant is a joint inventor together with the other joint inventors indicating them by name." Accordingly, a new declaration which lists all the inventors and is signed by the signing inventor and leaving the signature block of the nonsigning inventor blank is required. *See also* MPEP Sections 201.03 and 409.03(a).

Additionally, the declaration fails to properly identify the instant application. In this regard, the declaration identifies provisional Application No. 60/404,560 rather than the present application. Accordingly, the declaration further fails to comply with 37 CFR 1.63(b)(1).

Further correspondence with respect to this matter should be addressed as follows:

By mail: Mail Stop PETITION
Commissioner for Patents
Post Office Box 1450
Alexandria, VA 22313-1450

By hand: Crystal Plaza Two, Lobby
2011 South Clark Place
Room 1B03
Arlington, VA 22202

By fax: (703) 872-9306

Telephone inquiries related to this decision should be directed to at Wan Laymon(703) 306-5685.

Frances Hicks
Lead Petitions Examiner
Office of Petitions
Office of the Deputy Commissioner
for Patent Examination Policy

UNITED STATES PATENT AND TRADEMARK OFFICE

Commissioner for Patents
United States Patent and Trademark Office
P.O. Box 1450
Alexandria, VA 22313-1450
www.uspto.gov

THOMAS D. ROGERSON
ROHM AND HAAS COMPANY
100 INDEPENDENCE MALL WEST
PHILADELPHIA, PA 19106

COPY MAILED

NOV 1 8 2004

OFFICE OF PETITIONS

In re Application of :
John Paul Sari et al :
Application No. 10/643,833 : DECISION GRANTING STATUS
Filed: August 19, 2003 : UNDER 37 CFR 1.47(A)
For: PORTABLE DRUM DOSING SYSTEM :

This is a decision on the petition filed March 3, 2004, requesting reconsideration of a decision mailed February 4, 2004, which refused to accord 37 CFR 1.47(a) status to the above-identified application.

The petition is granted.

Petitioner has shown that the non-signing inventor has refused to join in the filing of the above-identified application.

The above-identified application and papers have been reviewed and found in compliance with 37 CFR 1.47(a). This application is hereby accorded Rule 1.47(a) status. As provided in Rule 1.47(c), this Office will forward notice of this application's filing to the non-signing inventor at the address given in the petition. Notice of the filing of this application will also be published in the Official Gazette.

Telephone inquiries regarding this decision should be directed to Petitions Examiner Wan Laymon at (571) 272-3220.

This matter is being referred to the Office of Initial Patent Examination for preexamination processing.

Frances Hicks
Lead Petitions Examiner
Office of Petitions
Office of the Deputy Commissioner
for Patent Examination Policy

UNITED STATES PATENT AND TRADEMARK OFFICE

Commissioner for Patents
United States Patent and Trademark Office
P.O. Box 1450
Alexandria, VA 22313-1450
www.uspto.gov

MAINE AND ASMUS
100 MAIN ST STE 2
NASHUA, NH 03060

COPY MAILED

MAR 0 3 2006

OFFICE OF PETITIONS

In re Patent No. 6,923,685	:	
Issued: August 2, 2005	:	
Application No. 10/643,838	:	ON PETITION
Filed: August 19, 2003	:	
Attorney Docket No. 81762/321	:	

This is a notice regarding your request for acceptance of a fee deficiency submission under 37 CFR 1.28. On September 1, 1998, the Court of Appeals for the Federal Circuit held that 37 CFR 1.28(c) is the sole provision governing the time for correction of the erroneous payment of the issue fee as a small entity. **See DH Technology v. Synergystex International, Inc. 154 F.3d 1333, 47 USPQ2d 1865 (Fed. Cir. Sept. 1, 1998).**

The Office no longer investigates or rejects original or reissue applications under 37 CFR 1.56. **1098 Off. Gaz. Pat. Office 502 (January 3, 1989)**. Therefore, nothing in this Notice is intended to imply that an investigation was done.

Your fee deficiency submission under 37 CFR 1.28 is hereby **ACCEPTED**.

Inquiries related to this communication should be directed to the undersigned at (571) 272-3282.

Liana Chase
Petitions Examiner
Office of Petitions

UNITED STATES PATENT AND TRADEMARK OFFICE

Commissioner for Patents
United States Patent and Trademark Office
P.O. Box 1450
Alexandria, VA 22313-1450
www.uspto.gov

BORGWARNER INC.
3850 HAMLIN ROAD
AUBURN HILLS MI 48326

COPY MAILED

SEP 2 8 2005

OFFICE OF PETITIONS

In re Application of :
Roger Simpson :
Patent No. 6,840,202 :
Application Number: 10/643,842 :
Issue Date : January 11, 2005 : DECISION ON PETITION
Filing Date: August 19, 2003 :
Attorney Docket Number: BW-DKT01115A :

This is a decision on the petition for certificate of correction under 37 CFR 1.183 filed on May 9, 2005. The petition is properly treated under 37 CFR 3.81 (b) to correct the assignee on the front page of the above-identified patent by way of a Certificate of Correction.

The request is **Dismissed**.

Any request for reconsideration must be submitted within TWO (2) MONTHS from the mail date of this decision. Extensions of time under 37 C.F.R. § 1.136(a) are not permitted. The reconsideration request should include a cover letter entitled "Renewed Petition". This is **not** a final agency action within the meaning of 5 U.S.C. § 704.

Effective June 25, 2004, when a request to issue a patent to an assignee is filed after payment of the issue fee, a certificate of correction must be submitted as there is no time to process these request before a patent is issued. See 69 Fed. Reg. 29865 (May 26, 2004).

Any request for issuance of an application in the name of the assignee submitted after the date of the payment of the issue fee, and any request that a patent be corrected to state the name of assignee must :

(A) state the assignment was submitted for recordation as set forth in 37 CFR §3.11 before issuance of the patent;

(B) provide a request for a certificate of correction §1.323;

(C) provide the fee set forth in 37 CFR §1.20 (a) and

(D) provide the processing fee set forth in 37 CFR §1.17(l)

Petitioner has failed to establish (A). Petitioner states the name of the assignee "Borgwarner Inc" was incorrectly printed on the patent. The correct name is "BorgWarner Inc". However, the spelling of the assignee's name on the patent agrees with the Office PALM computer database assignment records at the time of the issuance of the patent. Unless petitioner can establish the assignee's name was improperly recorded due to Office mistake, a correction of the assignee's name is not in order.

The processing required under 37 CFR 1.17(l) is $130.00. Accordingly deposit account 02-0910 will be refunded $270.00.

Further correspondence with respect to this matter may be addressed as follows:

By mail:	Mail Stop Petition Commissioner for Patents P.O. Box 1450 Alexandria, VA 22313-1450
By facsimile:	(571) 273-8300
By delivery service: FedEx, UPS, DHL, etc.)	U.S. Patent and Trademark Office Customer Service Window, Randolph Building 401 Dulany Street Alexandria, VA 22314

Telephone inquiries concerning this matter should be directed to the undersigned at (571) 272-3215.

Charlema R. Grant
Petitions Attorney
Office of Petitions

cc: Lynda Wood
Brown & Michaels
400 M & T Bank Building- 118 N. Tioga St.
Ithaca, NY 14850

UNITED STATES PATENT AND TRADEMARK OFFICE

Pet. Dec.

COMMISSIONER FOR PATENTS
UNITED STATES PATENT AND TRADEMARK OFFICE
P.O. BOX 1450
ALEXANDRIA, VA 22313-1450
www.uspto.gov

JUN 18 2004

VP
PAPER NO. ___

In re Application of
Francis W. Sullivan
Serial Number: 10/643,854
Filed: March 10, 2004
For: COMPOSITIONS FOR PRODUCING ARCHITECTURAL CEMENTITIOUS STRUCTURES HAVING DECORATIVE AGGREGATE-CONTAINING CEMENTITIOUS SURFACES AND PROCESSES THEREFOR

PETITION UNDER
M.P.E.P.708.02 IV

This is in response to the petition filed March 10, 2004, requesting that the above-identified application be granted Special Status under Section 708.02 IV of the MPEP and 37 CFR 1.102(c) (**no fee required**).

The request for Special Status considered under Section 708.02 IV of the MPEP is granted because criteria under 37 CFR 1.102(c) has been met.

Accordingly the petition is **GRANTED.**

William A. Krynski, Special Programs Examiner
Technology Center 1700
Chemical and Materials Engineering

F. Eugene Logan, Attorney
202 Fashion Lane
Suite 201
Tustin CA 92780

UNITED STATES PATENT AND TRADEMARK OFFICE

UNITED STATES DEPARTMENT OF COMMERCE
United States Patent and Trademark Office
Address: COMMISSIONER FOR PATENTS
P.O. Box 1450
Alexandria, Virginia 22313-1450
www.uspto.gov

MANELLI DENISON & SELTER PLLC
7th Floor
2000 M Street, N.W.
Washington, DC 20036-3307

Mail Date: 04/21/2010

Applicant	: Steve Anspach	: DECISION ON REQUEST FOR
Patent Number	: 7577835	: RECALCULATION of PATENT
Issue Date	: 08/18/2009	: TERM ADJUSTMENT IN VIEW
Appliction No	: 10/643,868	: OF WYETH AND NOTICE OF INTENT TO
Filed	: 08/20/2003	: ISSUE CERTIFICATE OF CORRECTION
		:

The Request for Recalculation is **GRANTED** to the extent indicated.

The patent term adjustment has been determined to be **931** days. The USPTO will *sua sponte* issue a certificate of correction reflecting the amount of PTA days determined by the recalculation.

Prior to the issuance of the certificate of correction, the USPTO will afford patentee an opportunity to be heard and request reconsideration. Accordingly, patentee has **one month or thirty (30) days**, whichever is longer, to file a request for reconsideration of this patent term adjustment calculation. See 35 U.S.C. 154(b)(3)(B)(ii) and 37 CFR 1.322(a)(4). No extensions of time will be granted under 37 CFR 1.136.

Patentee should use document code PET.OP if electronically filing a request for reconsideration of this patent term adjustment calculation. The patentee must also include the information required by 37 CFR 1.705(b)(2) and the fee required by 37 CFR 1.18(e). If patentee does not file a timely request for reconsideration of this patent term adjustment calculation including the information required by 37 CFR 1.705(b)(2) and the fee required by 37 CFR 1.18(e), the USPTO will issue a certificate of correction reflecting the PTA determination noted above.

Patentee should be aware that in order to preserve the right to review in the United States District Court for the District of Columbia of the USPTO patent term adjustment determination, patentee must ensure that he or she also take the steps required under 35 U.S.C. 154(b)(4)(A) in a timely manner. Nothing in the request for recalculation should be construed as providing an alternative time frame for commencing a civil action under 35 U.S.C. 154(b)(4)(A).

Any questions concerning this decision should be directed to the Office of Patent Legal Administration at 571-272-7702.

UNITED STATES PATENT AND TRADEMARK OFFICE

Commissioner for Patents
United States Patent and Trademark Office
P.O. Box 1450
Alexandria, VA 22313-1450
www.uspto.gov

OLIFF & BERRIDGE, PLC
P.O. BOX 320850
ALEXANDRIA VA 22320-4850

MAILED

MAR 16 2009

OFFICE OF PETITIONS

In re Application of	:	
Ikutaroh Nagatsuka, et al.	:	
Application No. 10/643,890	:	DECISION GRANTING PETITION
Filed: August 20, 2003	:	UNDER 37 CFR 1.313(c)(2)
Attorney Docket No. 116902	:	

This is a decision on the petition under 37 CFR 1.313(c)(2), filed March 16, 2009, to withdraw the above-identified application from issue after payment of the issue fee.

The petition is **GRANTED**.

The above-identified application is withdrawn from issue for consideration of a submission under 37 CFR 1.114 (request for continued examination). *See* 37 CFR 1.313(c)(2).

Petitioner is advised that the issue fee paid on February 12, 2009 cannot be refunded. If, however, this application is again allowed, petitioner may request that it be applied towards the issue fee required by the new Notice of Allowance.[1]

Telephone inquiries should be directed to Terri Williams at (571) 272-2991.

This application is being referred to Technology Center AU 2887 for processing of the request for continued examination under 37 CFR 1.114 and for consideration of the concurrently filed amendment.

Terri Williams
Petitions Examiner
Office of Petitions

[1] *The request to apply the issue fee to the new Notice may be satisfied by completing and returning the new Part B – Fee(s) Transmittal Form (along with any balance due at the time of submission). Petitioner is advised that the Issue Fee Transmittal Form must be completed and timely submitted to avoid abandonment of the application.*

UNITED STATES PATENT AND TRADEMARK OFFICE

Commissioner for Patents
United States Patent and Trademark Office
P.O. Box 1450
Alexandria, VA 22313-1450
www.uspto.gov

CROWELL & MORING LLP
INTELLECTUAL PROPERTY GROUP
P.O. BOX 14300
WASHINGTON DC 20044-4300

MAILED

APR 26 2010

OFFICE OF PETITIONS

In re Patent No. 7,540,274	: DECISION GRANTING PETITION
Issue Date: June 02, 2009	: UNDER 37 CFR 1.78(a)(3) AND
Application No. 10/643,925	: REQUEST FOR CERTIFICATE OF
Filed: August 20, 2003	: CORRECTION
Attorney Docket No. 056205.48558C1	:

This is a decision on the petition, filed October 15, 2009, which is being treated as a petition under 37 CFR 1.78(a)(3), seeking to add a claim for priority under 35 U.S.C. § 120 to nonprovisional Application No. 10/463,659, filed January 28, 2009, by way of a certificate of correction.

The petition is **granted**.

A review of the file record fails to disclose that a claim for the benefit of priority to the above-noted, prior-filed nonprovisional application was made within the time period set forth in 37 CFR 1.78(a)(2)(ii) and further failed to include a proper reference to the prior-filed application as required by 37 CFR 1.78(a)(2)(i) and 1.78(a)(2)(iii).

The instant application was filed August 20, 2003. Therefore, since this application was filed after November 29, 2000, a petition under 37 CFR 1.78(a)(3), along with submission of a Certificate of Correction, is the appropriate avenue of relief to accept a late claim for the benefit of priority to a prior-filed nonprovisional application after issuance of the application into a patent. *See* MPEP 1481.

A petition for acceptance of a claim for late priority under 37 CFR 1.78(a)(3) must be accompanied by:

(1) the reference required by 35 U.S.C. § 120 and 37 CFR 1.78(a)(2)(i) of the prior-filed application, unless previously submitted;
(2) the surcharge set forth in § 1.17(t); and
(3) a statement that the entire delay between the date the claim was due under 37 CFR 1.78(a)(2)(ii) and the date the claim was filed was unintentional. The Director may require additional information where there is a question whether the delay was unintentional.

As the petition for acceptance of an unintentionally delayed claim for the benefit of priority under 35 U.S.C. § 120 to the above-noted, prior-filed nonprovisional application satisfies the conditions of 37 CFR 1.78(a)(3), the petition is granted.

A corrected Filing Receipt, which includes the priority claim to the above-noted, prior-filed nonprovisional application, accompanies this decision on petition.

Petitioner is advised that the granting of this petition and the mailing of a corrected Filing Receipt should not be viewed as an indication that a determination has been made that this application is entitled to claim benefit of the prior-filed application. A determination that applicant is entitled to claim benefit of the prior-filed application will be made by the Examiner prior to the mailing of a certificate of correction.

As authorized, the $1,370 surcharge fee, as well as the $100 certificate of correction fee, will be charged to petitioner's Deposit Account No. 50-2638.

Any inquiries concerning this decision may be directed to Michelle R. Eason at (571) 272-4231.

This application is being referred to the Certificates of Correction Branch for processing the request for a certificate of correction in accordance with this decision on the petition under 37 CFR 1.78(a)(3).

Thurman K. Page
Petitions Examiner
Office of Petitions

ATTACHMENT: Corrected Filing Receipt

UNITED STATES PATENT AND TRADEMARK OFFICE

UNITED STATES DEPARTMENT OF COMMERCE
United States Patent and Trademark Office
Address: COMMISSIONER FOR PATENTS
P.O. Box 1450
Alexandria, Virginia 22313-1450
www.uspto.gov

APPLICATION NUMBER	FILING or 371(c) DATE	GRP ART UNIT	FIL FEE REC'D	ATTY.DOCKET.NO	TOT CLAIMS	IND CLAIMS
10/643,925	08/20/2003	3747	1788	056205.48558C1	17	10

CONFIRMATION NO. 4766

CORRECTED FILING RECEIPT

23911
CROWELL & MORING LLP
INTELLECTUAL PROPERTY GROUP
P.O. BOX 14300
WASHINGTON, DC 20044-4300

Date Mailed: 04/26/2010

Receipt is acknowledged of this non-provisional patent application. The application will be taken up for examination in due course. Applicant will be notified as to the results of the examination. Any correspondence concerning the application must include the following identification information: the U.S. APPLICATION NUMBER, FILING DATE, NAME OF APPLICANT, and TITLE OF INVENTION. Fees transmitted by check or draft are subject to collection. Please verify the accuracy of the data presented on this receipt. **If an error is noted on this Filing Receipt, please submit a written request for a Filing Receipt Correction. Please provide a copy of this Filing Receipt with the changes noted thereon. If you received a "Notice to File Missing Parts" for this application, please submit any corrections to this Filing Receipt with your reply to the Notice. When the USPTO processes the reply to the Notice, the USPTO will generate another Filing Receipt incorporating the requested corrections**

Applicant(s)

Hiroyuki Yamada, Hitachinaka, JAPAN;
Shigenori Tahara, Hitachinaka, JAPAN;
Atsuji Saito, Hitachinaka, JAPAN;
Yukio Takahashi, Hitachinaka, JAPAN;
Masami Abe, Hitachi, JAPAN;

Assignment For Published Patent Application

Hitachi, Ltd.
Hitachi Engineering Car Co., Ltd.

Power of Attorney: The patent practitioners associated with Customer Number 23911

Domestic Priority data as claimed by applicant

This application is a CON of 09/463,659 01/28/2000 PAT 6,631,706

Foreign Applications

JAPAN 11-31619 02/09/1999
JAPAN 11-129903 05/11/1999
JAPAN PCT/JP99/03257 06/18/1999

If Required, Foreign Filing License Granted: 11/14/2003

The country code and number of your priority application, to be used for filing abroad under the Paris Convention, is **US 10/643,925**

Projected Publication Date: Not Applicable

Non-Publication Request: No

Early Publication Request: No

Title

HIGH PRESSURE FUEL SUPPLY PUMP FOR INTERNAL COMBUSTION ENGINE

Preliminary Class

123

PROTECTING YOUR INVENTION OUTSIDE THE UNITED STATES

Since the rights granted by a U.S. patent extend only throughout the territory of the United States and have no effect in a foreign country, an inventor who wishes patent protection in another country must apply for a patent in a specific country or in regional patent offices. Applicants may wish to consider the filing of an international application under the Patent Cooperation Treaty (PCT). An international (PCT) application generally has the same effect as a regular national patent application in each PCT-member country. The PCT process **simplifies** the filing of patent applications on the same invention in member countries, but **does not result** in a grant of "an international patent" and does not eliminate the need of applicants to file additional documents and fees in countries where patent protection is desired.

Almost every country has its own patent law, and a person desiring a patent in a particular country must make an application for patent in that country in accordance with its particular laws. Since the laws of many countries differ in various respects from the patent law of the United States, applicants are advised to seek guidance from specific foreign countries to ensure that patent rights are not lost prematurely.

Applicants also are advised that in the case of inventions made in the United States, the Director of the USPTO must issue a license before applicants can apply for a patent in a foreign country. The filing of a U.S. patent application serves as a request for a foreign filing license. The application's filing receipt contains further information and guidance as to the status of applicant's license for foreign filing.

Applicants may wish to consult the USPTO booklet, "General Information Concerning Patents" (specifically, the section entitled "Treaties and Foreign Patents") for more information on timeframes and deadlines for filing foreign patent applications. The guide is available either by contacting the USPTO Contact Center at 800-786-9199, or it can be viewed on the USPTO website at http://www.uspto.gov/web/offices/pac/doc/general/index.html.

For information on preventing theft of your intellectual property (patents, trademarks and copyrights), you may wish to consult the U.S. Government website, http://www.stopfakes.gov. Part of a Department of Commerce initiative, this website includes self-help "toolkits" giving innovators guidance on how to protect intellectual property in specific countries such as China, Korea and Mexico. For questions regarding patent enforcement issues, applicants may call the U.S. Government hotline at 1-866-999-HALT (1-866-999-4158).

LICENSE FOR FOREIGN FILING UNDER

Title 35, United States Code, Section 184

Title 37, Code of Federal Regulations, 5.11 & 5.15

GRANTED

The applicant has been granted a license under 35 U.S.C. 184, if the phrase "IF REQUIRED, FOREIGN FILING LICENSE GRANTED" followed by a date appears on this form. Such licenses are issued in all applications where the conditions for issuance of a license have been met, regardless of whether or not a license may be required as

set forth in 37 CFR 5.15. The scope and limitations of this license are set forth in 37 CFR 5.15(a) unless an earlier license has been issued under 37 CFR 5.15(b). The license is subject to revocation upon written notification. The date indicated is the effective date of the license, unless an earlier license of similar scope has been granted under 37 CFR 5.13 or 5.14.

This license is to be retained by the licensee and may be used at any time on or after the effective date thereof unless it is revoked. This license is automatically transferred to any related applications(s) filed under 37 CFR 1.53(d). This license is not retroactive.

The grant of a license does not in any way lessen the responsibility of a licensee for the security of the subject matter as imposed by any Government contract or the provisions of existing laws relating to espionage and the national security or the export of technical data. Licensees should apprise themselves of current regulations especially with respect to certain countries, of other agencies, particularly the Office of Defense Trade Controls, Department of State (with respect to Arms, Munitions and Implements of War (22 CFR 121-128)); the Bureau of Industry and Security, Department of Commerce (15 CFR parts 730-774); the Office of Foreign AssetsControl, Department of Treasury (31 CFR Parts 500+) and the Department of Energy.

NOT GRANTED

No license under 35 U.S.C. 184 has been granted at this time, if the phrase "IF REQUIRED, FOREIGN FILING LICENSE GRANTED" DOES NOT appear on this form. Applicant may still petition for a license under 37 CFR 5.12, if a license is desired before the expiration of 6 months from the filing date of the application. If 6 months has lapsed from the filing date of this application and the licensee has not received any indication of a secrecy order under 35 U.S.C. 181, the licensee may foreign file the application pursuant to 37 CFR 5.15(b).

UNITED STATES PATENT AND TRADEMARK OFFICE

Commissioner for Patents
United States Patent and Trademark Office
P.O. Box 1450
Alexandria, VA 22313-1450
www.uspto.gov

F. CHAU & ASSOCIATES, LLC
130 WOODBURY ROAD
WOODBURY, NY 11797

COPY MAILED

JAN 12 2007

OFFICE OF PETITIONS

In re Application of	:	
Lee et al.	:	
Application No. 10/643,934	:	ON PETITION
Filed: August 20, 2003	:	
Attorney Docket No. 8054L-198T	:	

This is a decision on the petition under 37 C.F.R. § 1.137(b), filed October 12, 2006, to revive the above-identified application.

The petition is **GRANTED.**

The petition satisfies the conditions for revival pursuant to the provisions of 37 CFR 1.137(b) in that (1) the reply in the form of an Amendment; (2) the petition fee; and (3) the required statement of unintentional delay have been received. Accordingly, the response has been accepted as having been unintentionally delayed.

This matter is being referred to Technology Center 2800 for further examination on the merits.

Telephone inquiries regarding this decision should be directed to the undersigned at (571) 272-3206.

Liana Walsh
Petitions Examiner
Office of Petitions

UNITED STATES PATENT AND TRADEMARK OFFICE

Commissioner for Patents
United States Patent and Trademark Office
P.O. Box 1450
Alexandria, VA 22313-1450
www.uspto.gov

STERNE, KESSLER, GOLDSTEIN & FOX PLLC
1100 NEW YORK AVENUE, NW
WASHINGTON, DC 20005

COPY MAILED

OCT 0 4 2006

OFFICE OF PETITIONS

In re Application of :
Stephen C. Bytnar :
Application No. 10/643,960 : DECISION GRANTING PETITION
Filed: August 20, 2003 : UNDER 37 CFR 1.181
Attorney Docket No. 1533.6310004 :

This is a decision on the petition under 37 CFR 1.137(b), filed December 29, 2005, which, for the reasons stated below, is being treated as a petition requesting withdrawal of the holding of abandonment pursuant to the provisions of 37 CFR 1.181.

The petition is **GRANTED**.

The Notice of Abandonment mailed on December 15, 2005 stated that this application is abandoned for failure to timely file a reply to the Office action of November 29, 2004 and that the reply received on October 21, 2005 did not constitute a proper or bona fide attempt at a proper reply to the non-final rejection.

A review of the file record discloses that a non-final Office action was mailed on November 30, 2004, which set a three month shortened statutory period for reply. A timely reply, along with a three month extension of time fee, was received on May 27, 2005. However, in a Notice of Non-Compliant Amendment mailed July 28, 2005, a one month extendable time period was set within which to comply with the provisions of 37 CFR 1.121. A response thereto was timely received on August 22, 2005. This amendment was likewise found to be non-compliant in a Notice mailed on October 21, 2005 which again set a one month extendable time period within which to comply with the provisions of 37 CFR 1.121. A reply thereto was received on December 29, 2005, along with the filing of the instant petition to revive.

As the extendable period set in both the July 28, 2005 Notice and the October 21, 2005 Notice had not yet expired at the time of mailing of the Notice of Abandonment, the Notice of Abandonment was prematurely mailed. Further, as extensions of time were still available for reply to the October 21, 2005 Notice, a two

month extension of time fee of $450 for the reply filed on December 29, 2005 will be taken from the $1,500 petition to revive fee submitted, and the excess fee of $1,050 will be refunded to petitioner's deposit account. However, if the examiner determines that the reply filed on December 29, 2005 is still non-responsive to the October 21, 2005 Notice of Non-Compliant Amendment, this case could be found to be abandoned and then a petition to revive would be appropriate.

In view of the above, the Notice of Abandonment mailed on December 15, 2005 is vacated and the holding of abandonment is hereby withdrawn.

Inquiries concerning this decision may be directed to the undersigned at (571) 272-3218.

This matter is being referred to Technology Center AU 1755 for appropriate action in the normal course of business on the reply received December 29, 2005.

Frances Hicks
Petitions Examiner
Office of Petitions

UNITED STATES PATENT AND TRADEMARK OFFICE

Commissioner for Patents
United States Patent and Trademark Office
Washington, D.C. 20231
www.uspto.gov

STAAS & HALSEY LLP
SUITE 700
1201 NEW YORK AVENUE, N.W.
WASHINGTON DC 20005

COPY MAILED

DEC 0 8 2008

OFFICE OF PETITIONS

In re Application of :
Haruyuki Kunisada :
Application No. 10/644,006 : ON PETITION
Filed: August 20, 2003 :
Attorney Docket No. **1081.1182** :

This is a decision on the petition filed November 7, 2008 under 37 CFR 1.181(b) to withdraw the holding of abandonment, in accordance with the reasoning of the decision in Delgar Inc. v. Schuyler, 172 USPQ 513.

The petition is **GRANTED**.

This application became abandoned for failure to pay the issue fee on or before September 25, 2008 as was required by the Notice of Allowance mailed June 25, 2008. This application therefore became abandoned on September 26, 2008. Accordingly, a Notice of Abandonment was mailed October 20, 2008.

The file record discloses that the Notice of Allowance was mailed to the address of record, the same address to which the Notice of Abandonment was mailed and received. However, petitioner contends that the Notice of Allowance was not received. In support, petitioner indicates that a search of the file and docket records revealed that the Notice was not received and submits copies of pages from the docketing system used, wherein receipt of the Notice would have been entered, had it been received to substantiate the claim. The statement and attachments corroborate non-receipt of the Notice of Allowance.

In view of the facts set forth in the petition, it is concluded that the Notice of Allowance was never received. Accordingly, the holding of abandonment is withdrawn. No petition fee is due and none has been charged.

This application is being forwarded to the Technology Center 2175 for a remailing of the Notice of Allowance and Notice of Allowability.

Telephone inquiries concerning this matter should be directed to the undersigned Petitions Attorney at (571) 272-3212.

Patricia Faison-Ball

Patricia Faison-Ball
Senior Petitions Attorney
Office of Petitions

UNITED STATES PATENT AND TRADEMARK OFFICE

COMMISSIONER FOR PATENTS
UNITED STATES PATENT AND TRADEMARK OFFICE
P.O. BOX 1450
ALEXANDRIA, VA 22313-1450
www.uspto.gov

COPY MAILED

OCT 04 2007

OFFICE OF PETITIONS

DANIEL R. MCCLURE
THOMAS, KAYDEN, HORSTEMEYER & RISLEY, L.L.P.
SUITE 1750
100 GALLERIA PARKWAY
ATLANTA, GA 30339

In re Application of
Lujing Cai
Application No. 10/644,023
Filed: August 20, 2003
Attorney Docket No. 60707-1540

ON PETITION

This is a decision in response to the petition, filed June 14, 2007, to revive the above-identified application under the provisions of 37 CFR 1.137(b).

The petition is **GRANTED**.

The application became abandoned for a failure to reply in a timely manner to a non-final Office action mailed October 31, 2006. A Notice of Abandonment was mailed on May 9, 2007. In response, on June 14, 2007, the present petition was filed.

The petition satisfies the conditions for revival pursuant to the provisions of 37 CFR 1.137(b) in that petitioner has supplied (1) the reply in the form of an amendment; (2) the petition fee of $1,500; and (3) an adequate statement of unintentional delay.

The application is being referred to Technology Center AU 2611 for consideration of the amendment filed June 14, 2007.

Telephone inquiries concerning this decision should be directed to the undersigned at (571) 272-3204. Inquiries relating to further prosecution should be directed to the Technology Center.

Sherry D. Brinkley
Petitions Examiner
Office of Petitions

UNITED STATES PATENT AND TRADEMARK OFFICE

UNITED STATES DEPARTMENT OF COMMERCE
United States Patent and Trademark Office
Address: COMMISSIONER FOR PATENTS
P.O. Box 1450
Alexandria, Virginia 22313-1450
www.uspto.gov

TOWNSEND AND TOWNSEND AND CREW, LLP
TWO EMBARCADERO CENTER
EIGHTH FLOOR
SAN FRANCISCO, CA 94111-3834

Mail Date: 04/21/2010

Applicant	: George N. Pavlakis	: DECISION ON REQUEST FOR
Patent Number	: 7608422	: RECALCULATION of PATENT
Issue Date	: 10/27/2009	: TERM ADJUSTMENT IN VIEW
Appliction No	: 10/644,027	: OF WYETH AND NOTICE OF INTENT TO
Filed	: 08/19/2003	: ISSUE CERTIFICATE OF CORRECTION
		:

The Request for Recalculation is **GRANTED** to the extent indicated.

The patent term adjustment has been determined to be **1580** days. The USPTO will *sua sponte* issue a certificate of correction reflecting the amount of PTA days determined by the recalculation.

Prior to the issuance of the certificate of correction, the USPTO will afford patentee an opportunity to be heard and request reconsideration. Accordingly, patentee has **one month or thirty (30) days**, whichever is longer, to file a request for reconsideration of this patent term adjustment calculation. See 35 U.S.C. 154(b)(3)(B)(ii) and 37 CFR 1.322(a)(4). No extensions of time will be granted under 37 CFR 1.136.

Patentee should use document code PET.OP if electronically filing a request for reconsideration of this patent term adjustment calculation. The patentee must also include the information required by 37 CFR 1.705(b)(2) and the fee required by 37 CFR 1.18(e). If patentee does not file a timely request for reconsideration of this patent term adjustment calculation including the information required by 37 CFR 1.705(b)(2) and the fee required by 37 CFR 1.18(e), the USPTO will issue a certificate of correction reflecting the PTA determination noted above.

Patentee should be aware that in order to preserve the right to review in the United States District Court for the District of Columbia of the USPTO patent term adjustment determination, patentee must ensure that he or she also take the steps required under 35 U.S.C. 154(b)(4)(A) in a timely manner. Nothing in the request for recalculation should be construed as providing an alternative time frame for commencing a civil action under 35 U.S.C. 154(b)(4)(A).

Any questions concerning this decision should be directed to the Office of Patent Legal Administration at 571-272-7702.

SPE RESPONSE FOR CERTIFICATE OF CORRECTION

Paper No.: _____

DATE : June 6, 2006

TO SPE OF : ART UNIT 3751

SUBJECT : Request for Certificate of Correction for Appl. No.: 10/644039 Patent No.: 7,013,936

Please respond to this request for a certificate of correction within 7 days.

Please review the requested changes/corrections as shown in the **COCIN** document(s) in the IFW application image. No new matter should be introduced, nor should the scope or meaning of the claims be changed.

Please complete the response (see below) and forward the completed response to scanning using document code **COCX**.

Magdalene Talley

Certificates of Correction Branch

703-308-9390 ext. 116

Thank You For Your Assistance

The request for issuing the above-identified correction(s) is hereby:

Note your decision on the appropriate box.

- ☑ **Approved** — **All** changes apply.
- ☐ **Approved in Part** — Specify below which changes **do not** apply.
- ☐ **Denied** — State the reasons for denial below.

Comments: _____

7.18.06

Justine Yu — 3751

SPE **Art Unit**

UNITED STATES PATENT AND TRADEMARK OFFICE

Commissioner for Patents
United States Patent and Trademark Office
P.O. Box 1450
Alexandria, VA 22313-1450
www.uspto.gov

COPY MAILED

MAR 17 2008

OFFICE OF PETITIONS

NATH & ASSOCIATES
112 SOUTH WEST STREET
ALEXANDRIA, VA 22314

In re Application of :
Victor M. Hermelin :
Application No. 10/644,041 : DECISION ON PETITION
Filed: August 20, 2003 : TO WITHDRAW
Attorney Docket No. 23233YXY : FROM RECORD
:

This is a decision on the Request to Withdraw as attorney or agent of record under 37 C.F.R. § 1.36(b), filed September 19, 2007.

The request is **NOT APPROVED**.

A grantable request to withdraw as attorney/agent of record must be signed by every attorney/agent seeking to withdraw or contain a clear indication that one attorney is signing on behalf of another/others. A request to withdraw will not be approved unless at least 30 (thirty) days would remain between the date of approval and the later of the expiration date of a time to file a response or the expiration date of the maximum time period which can be extended under 37 C.F.R. § 1.136(a).

The request cannot be approved because no reasons for withdrawal have been provided. The Office cannot, at this time, determine whether practitioner's request is one of the mandatory or permissive reasons enumerated in 37 CFR 10.40. Any subsequent requests must include reasons for withdrawal. Please note that there is a space provided for on PTO/SB/83 (Request to Withdraw as Attorney or Agent) to supply practitioner's reasons.

All future communications from the Office will continue to be directed to the above-listed address until otherwise notified by applicant.

Telephone inquiries concerning this decision should be directed to undersigned at 571-272- 1642.

April M. Wise
Petitions Examiner
Office of Petitions

cc: RITA D. VACA, ESQ.
KV PHARMACEUTICAL COMPANY
2503 SOUTH HANLEY ROAD.
ST LOUIS, MO 63411-2555

UNITED STATES PATENT AND TRADEMARK OFFICE

COMMISSIONER FOR PATENTS
UNITED STATES PATENT AND TRADEMARK OFFICE
P.O. BOX 1450
ALEXANDRIA, VA 22313-1450
www.uspto.gov

JUN 8 2004

CHIRON CORPORATION
INTELLECTUAL PROPERTY LAW DEPT.
PO BOX 8097
EMERYVILLE CA 94662

In re Application of	:
Paul A. Barsanti et al	:
Serial No.: 10/644,055	: PETITION DECISION
Filed: August 19, 2003	:
Attorney Docket No.: 072121-0307	:

This is in response to the petition under 37 CFR 1.59(b), filed January 2, 2004, to expunge a Proprietary Information Disclosure Statement from the above identified application. This application has not yet been examined.

Petitioner requests that documents submitted with the petition as a Proprietary Information Disclosure Statement (PIDS) be expunged from the record. Petitioner states either: (A) that the information contains trade secret material, proprietary material and/or material that is subject to a protective order which has not been made public; or (B) that the information submitted was unintentionally submitted and the failure to obtain its return would cause irreparable harm to the party who submitted the information or to the party in interest on whose behalf the information was submitted, and the information has not otherwise been made public. The petition fee set forth in 37 CFR 1.17(h) has been paid.

The examiner of the application will consider the information contained in the PIDS and will determine whether the information contained therein relates to the determination of patentability of this application. The result of such determination will be set forth by the examiner in a future Office action. Should any of the information contained in the PIDS be used in a rejection that information will be made part of the official record of the application. If none of the information is pertinent to patentability the PIDS will be returned to applicants upon allowance of the application.

The petition is **GRANTED** to the extent indicated. Upon allowance of the application applicants should immediately submit a request, directed to the TC, for return of the PIDS. No fee will be required for such request.

Should there be any questions with respect to this decision, please contact William R. Dixon, Jr., by mail addressed to: Director, Technology Center 1600, P.O. Box 1450, Alexandria, VA 22313-1450, or by telephone at 571-272-0519 or by facsimile transmission at general Office facsimile number.

Bruce M. Kisliuk
Director, Technology Center 1600

UNITED STATES PATENT AND TRADEMARK OFFICE

Commissioner for Patents
United States Patent and Trademark Office
P.O. Box 1450
Alexandria, VA 22313-1450
www.uspto.gov

Nixon Peabody LLP
Clinton Square
P.O. Box 31051
Rochester NY 14603-1051

COPY MAILED

MAR 28 2006

OFFICE OF PETITIONS

In re Patent No. 6,923,670 :
Issue Date: August 2, 2005 :
Application No.:10/644,102 : NOTICE
Filed: August 19, 2003 :
Attorney Docket No.: 81762/311 :

This is a notice regarding your request for acceptance of a fee deficiency submission under 37 CFR 1.28, filed January 16, 2006.

On September 1, 1998, the Court of Appeals for the Federal Circuit held that 37 CFR 1.28(c) is the sole provision governing the time for correction of the erroneous payment of the issue fee as a small entity. **See DH Technology v. Synergystex International, Inc. 154 F.3d 1333, 47 USPQ2d 1865 (Fed. Cir. Sept. 1, 1998).**

The Office no longer investigates or rejects original or reissue applications under 37 CFR 1.56. **1098 Off. Gaz. Pat. Office 502 (January 3, 1989)**. Therefore, nothing in this Notice is intended to imply that an investigation was done.

Your fee deficiency submission under 37 CFR 1.28 is hereby **ACCEPTED**. The change of status to a large entity has been entered and made of record.

The application file does not indicate a change of address has been filed in this case, although the address given on the petition differs from the address of record. A change of address should be filed in this. A courtesy copy of this decision is being mailed to the address noted on the petition. However, until otherwise instructed, all future correspondence regarding this patent will be mailed solely to the address of record.

This file is being forwarded to the Files Repository.

Telephone inquiries concerning this matter may be directed to the undersigned at (571) 272-3230.

E. Shirene Willis

E. Shirene Willis
Petitions Attorney
Office of Petitions

CC: MAINE & ASMUS
PO BOX 3445
NASHUA, NH 03061-3445

UNITED STATES PATENT AND TRADEMARK OFFICE

Commissioner for Patents
United States Patent and Trademark Office
P.O. Box 1450
Alexandria, VA 22313-1450
www.uspto.gov

JUL 20 2005

MERONI + MERONI
P.O. BOX 309
BARRINGTON IL 60011

In re Application of	:	
Keith Sauerland	:	
Serial No.: 10/644,111	:	DECISION ON PETITION
Filed: August 20, 2003	:	
For: Cordless Stethoscope for Hazardous Material Enviornments	:	

This is in response to applicants' petition filed January 5, 2005 to make the above-identified application special under the provisions of 37 CFR 1.102(a), based on applicant's health condition.

Applicant has satisfied the provisions set forth in M.P.E.P. 708.02, IV with supporting documentation. Therefore the petition is hereby **GRANTED**.

The application will be forwarded to the examiner for action on the merits commensurate with this decision.

Should there be any questions with regard to this letter please contact Frederick Schmidt by letter addressed to the Director, Technology Center 3700, and P.O. BOX 1450 ALEXANDRIA, VA 22313-1450 or by telephone at (571) 272-2975 or by facsimile transmission at (571) 273-8300.

Frederick R. Schmidt, Director,
Technology Center 3700

CENTRAL FAX CENTER
FEB 07 2006

UNITED STATES PATENT AND TRADEMARK OFFICE

Commissioner for Patents
United States Patent and Trademark Office
P.O. Box 1450
Alexandria, VA 22313-1450
www.uspto.gov

JUL 20 2005

MERONI + MERONI
P.O. BOX 309
BARRINGTON IL 60011

In re Application of
Keith Sauerland
Serial No.: 10/644,111
Filed: August 20, 2003
For: Cordless Stethoscope for Hazardous Material Enviornments

DECISION ON PETITION

This is in response to applicants' petition filed January 5, 2005 to make the above-identified application special under the provisions of 37 CFR 1.102(a), based on applicant's health condition.

Applicant has satisfied the provisions set forth in M.P.E.P. 708.02, IV with supporting documentation. Therefore the petition is hereby **GRANTED**.

The application will be forwarded to the examiner for action on the merits commensurate with this decision.

Should there be any questions with regard to this letter please contact Frederick Schmidt by letter addressed to the Director, Technology Center 3700, and P.O. BOX 1450 ALEXANDRIA, VA 22313-1450 or by telephone at (571) 272-2975 or by facsimile transmission at (571) 273-8300.

Frederick R. Schmidt, Director,
Technology Center 3700

UNITED STATES PATENT AND TRADEMARK OFFICE

Commissioner for Patents
United States Patent and Trademark Office
P.O. Box 1450
Alexandria, VA 22313-1450
www.uspto.gov

KEITH ALLEN SAUERLAND
236 CROSS CREEK LANE
LINDENHURST IL 60046

COPY MAILED
DEC 13 2006
OFFICE OF PETITIONS

In re Application of :
Keith Allen Sauerland :
Application No. 10/644,111 : DECISION ON PETITION
Filed: August 20, 2003 : TO MAKE SPECIAL UNDER
Attorney Docket No. 03093 : 37 CFR 1.102(c)(1)

This is a decision on the petition under 37 CFR 1.102(c)(1), filed July 19, 2006, to make the above-identified application special based on applicant's health as set forth in M.P.E.P. § 708.02, Section III.

The petition is **DISMISSED as moot**.

The instant application has already been accorded "special" status per the decision from Technology Center 3700 with a mailing date of July 20, 2005. As set forth in M.P.E.P. § 708.02, "Applications which have been made special will be advanced out of turn for examination and **will continue to be treated as special throughout the entire prosecution in the Office** (emphasis added)".

Further correspondence with respect to this matter should be addressed as follows:

By Mail: Mail Stop PETITION
Commissioner for Patents
P. O. Box 1450
Alexandria, VA 22313-1450

By hand: U. S. Patent and Trademark Office
Customer Service Window, Mail Stop Petitions
Randolph Building
401 Dulany Street
Alexandria, VA 22314

By FAX: (571) 273-8300

Telephone inquiries concerning this decision should be directed to Ramesh Krishnamurthy at 571-272-4914, or to the undersigned at 571-272-7099.

All other inquiries concerning either the examination or status of the application should be directed to the Technology Center.

David Bucci
Petitions Examiner
Office of Petitions

UNITED STATES PATENT AND TRADEMARK OFFICE

Commissioner for Patents
United States Patent and Trademark Office
P.O. Box 1450
Alexandria, VA 22313-1450
www.uspto.gov

DILWORTH & BARRESE, LLP
333 EARLE OVINGTON BLVD.
SUITE 702
UNIONDALE NY 11553

COPY MAILED

FEB 0 1 2007

OFFICE OF PETITIONS

In re Application of :
Gaile :
Application No. 10/644,134 : ON PETITION
Filed: August 20, 2003 :
Attorney Docket No. 298-209 :
For: SPRING ELEMENT

This is a decision on the petition under 37 CFR 1.181, filed December 9, 2005, requesting that the Office withdraw the holding of abandonment of the above-identified application.

The petition under 37 CFR 1.181 is **GRANTED**.

This application was held abandoned for failure to respond in a timely manner to the non-final Office action, mailed April 28, 2005, which set forth an extendable three (3) month period for reply. The Office contended that this application became abandoned on July 29, 2005 for failure to reply to the April 28, 2005 non-final Office action. A Notice of Abandonment was mailed on November 2, 2005.

Petitioner requests withdrawal of the holding of abandonment based on the assertion that a request for a three month extension of time and an amendment were timely mailed on certificate of mailing date October 28, 2005 and received in the Office on October 31, 2005. The undersigned finds this argument completely convincing, as these documents are present in the application file and Office financial records shows that the required three month extension of time fee was charged on November 1, 2005. The mailroom date for the payment was erroneously listed as October 31, 2005. The undersigned will change Office financial records to show that the three month extension of time was received on mailroom date October 28, 2005. The three month extension of time and amendment were timely filed.

The petition under 37 CFR 1.181 is **granted**, the holding of abandonment is withdrawn, and the November 2, 2005 Notice of Abandonment is **vacated**. No petition fee has been or will be charged in connection with this matter.

Accordingly, the application file will be forwarded to Technology Center A.U. 3683 for consideration of the amendment filed on October 31, 2005 (certificate of mailing date October 28, 2005).

Telephone inquiries pertaining to this matter may be directed to the undersigned at (571) 272-3230.

Shirene Willis Brantley

Shirene Willis Brantley
Senior Petitions Attorney
Office of Petitions
Office of the Deputy Commissioner
for Patent Examination Policy

UNITED STATES PATENT AND TRADEMARK OFFICE

Commissioner for Patents
United States Patent and Trademark Office
P.O. Box 1450
Alexandria, VA 22313-1450
www.uspto.gov

EATON CORPORATION
EATON CENTER
1111 SUPERIOR AVENUE
CLEVELAND OH 44114

COPY MAILED

FEB 0 2 2007

OFFICE OF PETITIONS

In re Application of :
Ford et al. :
Application No. 10/644,135 : ON PETITION
Filed: August 20, 2003 :
Attorney Docket No. 02-ASD-334 (EM) :

This is a decision on the petition under 37 CFR 1.181 requesting the withdrawal of the holding of abandonment in the above-identified application, or in the alternative, under 37 C.F.R. § 1.137(b) to revive the above-identified application, both filed June 20, 2006.

The petition under 37 C.F.R. § 1.181 is **DISMISSED**.

The above-identified application became abandoned for failure to timely reply to the Office action mailed September 14, 2005. Accordingly, the above-identified application became abandoned on December 15, 2005. A Notice of Abandonment was mailed on May 12, 2006.

An allegation that an Office action was not received may be considered as a petition for the withdrawal of the holding of abandonment. If the allegation is adequately supported, the petition may be granted and a new Office action mailed. The showing required to establish non-receipt of an Office communication must include:

1. A statement from the practitioner stating that the Office communication was not received by the practitioner and attesting to the fact that a search of the file jacket and docket records indicates that the Office communication was not received.

2. A copy of the docket record where the non-received Office communication would have been entered had it been received and docketed must be attached to and referenced in practitioner's statement.[1]

In the absence of any irregularity there is a strong presumption that the communications was properly mailed to the applicant at the correspondence address of record. This presumption may be overcome by a showing that the aforementioned communications was not in fact received.

[1] See notice entitled "Withdrawing the Holding of Abandonment When Office Actions Are Not Received," 1156 O.G. 53 (November 16, 1993).

The showing in the instant petition is not sufficient to withdraw the holding of abandonment because practitioner did not include a copy of the docket record where the non-received Office communication would have been entered had it been received and docketed.

A decision on the alternative petition under 37 CFR 1.137(b) will be held in abeyance to allow petitioner an opportunity to submit a copy of the docket record.

Further correspondence with respect to this matter should be addressed as follows:

By mail:	Mail Stop PETITIONS Commissioner for Patents Post Office Box 1450 Alexandria, VA 22313-1450
By hand:	Customer Window located at: U.S. Patent and Trademark Office Customer Service Window Randolph Building 401 Dulany Street Alexandria, VA 22314
By fax:	(571) 273-8300 ATTN: Office of Petitions

Any questions concerning this matter may be directed to the undersigned at (571) 272-3206.

Liana Walsh
Petitions Examiner
Office of Petitions

UNITED STATES PATENT AND TRADEMARK OFFICE

Commissioner for Patents
United States Patent and Trademark Office
P.O. Box 1450
Alexandria, VA 22313-1450
www.uspto.gov

EATON CORPORATION
EATON CENTER
1111 SUPERIOR AVENUE
CLEVELAND OH 44114

COPY MAILED

MAY 07 2007

OFFICE OF PETITIONS

In re Application of :
Ford et al. :
Application No. 10/644,135 : DECISION ON PETITION
Filed: August 20, 2003 :
Attorney Docket No. 02-ASD-334 (EM) :

This is a decision on the renewed petition, filed February 23, 2007, which is being treated as a petition under 37 CFR 1.181 (no fee) requesting withdrawal of the holding of abandonment in the above-identified application.

The petition is **GRANTED**.

Petitioner asserts that the Office action dated September 14, 2005 was not received.

A review of the written record indicates no irregularity in the mailing of the Office action, and, in the absence of any irregularity, there is a strong presumption that the Office action was properly mailed to the practitioner at the address of record. This presumption may be overcome by a showing that the Office action was not in fact received. In this regard, the showing required to establish the failure to receive the Office action must consist of the following:

1. a statement from practitioner stating that the Office action was not received by the practitioner;

2. a statement from the practitioner attesting to the fact that a search of the file jacket and docket records indicates that the Office action was not received; and

3. a copy of the docket record where the non-received Office action would have been entered had it been received must be attached to and referenced in the practitioner's statement.

See MPEP § 711.03(c) under subheading "Petition to Withdraw Holding of Abandonment Based on Failure to Receive Office Action," and "Withdrawing the Holding of Abandonment When Office Actions Are Not Received," 1156 Official Gazette 53 (November 16, 1993).

The petition now satisfies the above-stated requirements. Accordingly, the application was not abandoned in fact.

In view of the above, the Notice of Abandonment is hereby vacated and the holding of abandonment withdrawn.

Telephone inquiries regarding this decision should be directed to the undersigned at (571) 272-3206. All other inquiries should be directed to the Technology Center.

This matter is being referred to the Technology Center technical support staff of Art Unit 3753 for re-mailing the Office action of September 14, 2005. The period for reply will run from the mailing date of the Office action.

Liana Walsh
Petitions Examiner
Office of Petitions

UNITED STATES PATENT AND TRADEMARK OFFICE

Commissioner for Patents
United States Patent and Trademark Office
P.O. Box 1450
Alexandria, VA 22313-1450
www.uspto.gov

LUCAS & MERCANTI, LLP
475 PARK AVENUE SOUTH
15TH FLOOR
NEW YORK NY 10016

COPY MAILED

JAN 16 2008

OFFICE OF PETITIONS

In re Application of :
Hiroaki Takano et al :
Application No. 10/644,136 : DECISION GRANTING PETITION
Filed: August 20, 2003 : UNDER 37 CFR 1.313(c)(3)
Attorney Docket No. KON-1811 :

This is a decision on the petition, filed January 14, 2008 and resubmitted on January 15, 2008, under 37 CFR 1.313(c)(3) to withdraw the above-identified application from issue after payment of the issue fee.

The petition is **GRANTED**.

Petitioner requests that the above-identified application be withdrawn from issue for express abandonment. *See* 37 CFR 1.313(c)(3).

The application is hereby withdrawn from issue, and the abandonment is hereby recognized.

Petitioner is advised that the issue and publication fees paid on December 28, 2007 are not refundable. See 37 CFR 1.26.

Telephone inquiries should be directed to the undersigned at (571) 272-3208.

Karen Creasy

Karen Creasy
Petitions Examiner
Office of Petitions

UNITED STATES PATENT AND TRADEMARK OFFICE

Commissioner for Patents
United States Patent and Trademark Office
P.O. Box 1450
Alexandria, VA 22313-1450
www.uspto.gov

FREESCALE SEMICONDUCTOR, INC.
LAW DEPARTMENT
7700 WEST PARMER LANE MD:TX32/PL02
AUSTIN, TX 78729

COPY MAILED

JUN 05 2006

OFFICE OF PETITIONS

In re Application of :
Deborah A. Hagen : DECISION ON PETITION
Application No. 10/644,163 : UNDER 37 CFR 1.137(b)
Filed: August 20, 2003 :
Attorney Docket No. SC12699TK :

This is a decision on the petition under 37 CFR 1.137(b), filed March 27, 2006, to revive the above-identified application.

The petition is **granted**.

This application became abandoned for failure to timely pay the issue and publication fees on or before March 1, 2006 as required by the Notice of Allowance and Fee(s) Due, mailed December 1, 2005.

The petition satisfies the requirements for a grantable petition in that the reply in the form of payment of the $1,400 issue fee and $300 publication fee; the petition fee of $1,500; and the required statement of unintentional delay have been submitted. Accordingly, the issue and publication fees are accepted as having been unintentionally delayed.

Inquiries related to this communication should be directed to the undersigned at (571) 272-3218.

This matter is being referred to Publishing Division.

Frances Hicks
Petitions Examiner
Office of Petitions

UNITED STATES PATENT AND TRADEMARK OFFICE

Commissioner for Patents
United States Patent and Trademark Office
P.O. Box 1450
Alexandria, VA 22313-1450
www.uspto.gov

DRUMMOND & DUCKWORTH
4590 MACARTHUR BLVD.,
SUITE 500
NEWPORT BEACH, CA 92660

COPY MAILED

DEC 12 2005

OFFICE OF PETITIONS

In re Application of :
Robert Stephen :
Application No. 10/644,196 : ON PETITION
Filed: August 19, 2003 :
Attorney Docket No. 746-P-9-USA :

This is a decision on the petition under 37 CFR 1.137(b), filed September 8, 2005, to revive the above-identified application.

The petition is **GRANTED.**

The above-identified application became abandoned for failure to reply in a timely manner to the non-final Office action mailed March 1, 2005, which set a shortened statutory period for reply of three (3) months. No extensions of time under the provisions of 37 CFR 1.136(a) were obtained. Accordingly, the application became abandoned at midnight on June 2, 2005.

An extension of time under 37 CFR 1.136 must be filed prior to the expiration of the maximum extendable period for reply. See In re Application of S., 8 USPQ2d 1630, 1631 (Comm'r Pats. 1988). Accordingly, the $510 extension of time submitted on September 8, 2005 was subsequent to the maximum extendable period for reply, this fee is unnecessary and will be refunded by treasury check in due course.

The change of Correspondence Address has been accepted and recorded.

The petition satisfies the requirement of 37 CFR 1.137 (b) in that petitioner has supplied (1) the reply in the form of an Amendment; (2) the petition fee of $750; and (3) the required statement of unintentional delay have been received. Accordingly, the petition filed September 8, 2005 is accepted as having been unintentionally delayed.

Telephone inquiries concerning this decision should be directed to the undersigned at (571) 272-3229.

The application matter is being referred to Technology Center 1700, Art Unit 1772 for further processing.

Retta Williams

Retta Williams
Petitions Examiner
Office of Petitions

UNITED STATES PATENT AND TRADEMARK OFFICE

Commissioner for Patents
United States Patent and Trademark Office
P.O. Box 1450
Alexandria, VA 22313-1450
www.uspto.gov

JJGJr: 09-05

Paper No: __

VEDDER PRICE
KAUFMAN & KAMMHOLZ
222 N. LASALLE STREET
CHICAGO IL 60601

COPY MAILED

SEP 12 2005

OFFICE OF PETITIONS

In re Application of :
Hardesty :
Application No. 10/644,206 : DECISION
Filed: 20 August, 2003 :
Attorney Docket No.: 03-015 US :

This is a decision on the petition, filed 21 June, 2005, to revive the instant nonprovisional application under the provisions of 37 C.F.R. §1.137(f).

The petition is **GRANTED**.

Petitioner states that the instant nonprovisional application is the subject of an application filed in a foreign country or otherwise requiring publication on 20 July, 2004. Moreover, Petitioner submitted the instant petition (with recision request) 21 June, 2005, upon learning of the error.

Thus, Petitioner alleges unintentional failure to notify the U.S. Patent and Trademark Office of this filing of the subject application in a foreign country within 45 days of that filing.

In view of the above, this application became abandoned pursuant to 35 U.S.C. §122(b)(2)(B)(iii) and 37 C.F.R. §1.213(c) for failure to timely notify the Office of the filing of an application in a foreign country, or under a multilateral international agreement, that requires publication of applications 18 months after filing.

A petition under 37 C.F.R. §1.137(f) must be accompanied by:

(1) the reply--which is met by the notification of such filing in a foreign

country or under a multinational treaty;

(2) the petition fee as set forth in 37 C.F.R. §1.17(m); and

(3) a statement that the entire delay in filing the required reply from the due date of the reply until the filing of a grantable petition was unintentional.

The instant petition has been found to be in compliance with 37 C.F.R. §1.137(f). Accordingly, the failure to timely notify the Office of a foreign or international filing within 45 days after the date of filing of such foreign or international application as provided by 35 U.S.C. §122(b)(2)(B)(iii) and 37 C.F.R. §1.213(c) is accepted as having been unintentionally delayed.

The previous Request and Certification under 35 U.S.C. §122(b)(2)(B)(I) has been rescinded. A Notice Regarding Rescission of Nonpublication Request, which sets forth the projected publication date of 27 October, 2005 (previously mailed), accompanies this decision.

This application is being released to Technology Center 2800 for further processing in due course.

Inquiries concerning this decision may be directed to the undersigned at (571) 272-3214.

John J. Gillon, Jr.
Senior Attorney
Office of Petitions

ATTACHMENT: Notice Regarding Rescission of Nonpublication Request

UNITED STATES PATENT AND TRADEMARK OFFICE

COMMISSIONER FOR PATENTS
UNITED STATES PATENT AND TRADEMARK OFFICE
P.O. BOX 1450
ALEXANDRIA, VA 22313-1450
www.uspto.gov

VIDAS, ARRETT & STEINKRAUS, P.A.
6109 BLUE CIRCLE DRIVE
SUITE 2000
MINNETONKA, MN 55343-9185

COPY MAILED

JUL 18 2005

OFFICE OF PETITIONS

In re Application of :
John A. Clancy, et al. :
Application No. 10/664,223 : ON PETITION
Filed: September 17, 2003 :
Attorney Docket No. A39.2-10912 :

This is a decision on the petition under 37 CFR 1.137(b) to revive the above-identified application, filed June 16, 2005.

The petition is GRANTED.

The application became abandoned for failure to pay the issue fee on or before April 4, 2005. Receipt is acknowledged of the requisite issue/publication fee on June16, 2005.

The application is being referred to Publishing Division.

Telephone inquires related to this decision should be directed to the undersigned at (571) 272-3204. Telephone inquiries related to processing at Publishing Division should be directed to (703) 305-8283.

Sherry D. Brinkley
Petitions Examiner
Office of Petitions
Office of the Deputy Commissioner
for Patent Examination Policy

UNITED STATES PATENT AND TRADEMARK OFFICE

Commissioner for Patents
United States Patent and Trademark Office
P.O. Box 1450
Alexandria, VA 22313-1450
www.uspto.gov

B. ANNA MCCOY
KOLISCH HARTWELL, P.C.
200 PACIFIC BUILDING
520 S.W. YAMHILL STREET
PORTLAND, OR 97204

COPY MAILED

OCT 2 6 2005

OFFICE OF PETITIONS

In re Application of :
Engle, Timothy Scott :
Application No. 10/644,232 : DECISION GRANTING PETITION
Filed: August 19, 2003 : UNDER 37 CFR 1.137(b)
Attorney Docket No. IFC372 :

This is a decision on the petition, filed October 14, 2005, which is being treated as a petition under 37 CFR 1.137(b) to revive the instant non-provisional application for failure to timely notify the U.S. Patent and Trademark (USPTO) of the filing of an application in a foreign country, or under a multinational treaty that requires publication of applications eighteen months after filing. *See* 37 CFR 1.137(f).

The petition is **GRANTED**.

Petitioner states that the instant nonprovisional application is the subject of an application filed in an eighteen-month publication country on August 11, 2004. However, the USPTO was unintentionally not notified of this filing within 45 days subsequent to the filing of the subject application in an eighteen-month publication country.

In view of the above, this application became abandoned pursuant to 35 U.S.C. § 122(b)(2)(B)(iii) and 37 CFR 1.213(c) for failure to timely notify the Office of the filing of an application in a foreign country or under a multilateral international agreement that requires publication of applications 18 months after filing.

A petition to revive an application abandoned pursuant to 35 U.S.C. 122(b)(2)(B)(iii) for failure to notify the USPTO of a foreign filing must be accompanied by:

(1) the required reply which is met by the notification of such filing in a foreign country or under a multinational treaty;
(2) the petition fee as set forth in 37 CFR 1.17(m); and
(3) a statement that the entire delay in filing the required reply from the due date of the reply until the filing of a grantable petition was unintentional.

The instant petition has been found to be in compliance with 37 CFR 1.137(b). Accordingly, the failure to timely notify the USPTO of a foreign or international filing within 45 days after the date of filing of such foreign or international application as provided by 35 U.S.C. § 122(b)(2)(B)(iii) and 37 CFR 1.213(c) is accepted as having been unintentionally delayed.

The previous Request and Certification under 35 U.S.C. § 122(b)(2)(B)(i) has been rescinded. Due to a computer error, the Notice Regarding Rescission of Nonpublication Request mailed on October 18, 2005, set forth the projected publication date as WDNP. The Office will regenerate the Notice with a proper projected publication date once the problem as been fixed.

The file does not indicate a change of address has been submitted, although the address given on the petition differs from the address of record. If appropriate, a request to change the address of record should be filed. A courtesy copy of this decision is being mailed to the address given on the petition; however, the Office will mail all future correspondence solely to the address of record.

This matter is being referred to Technology Center 2800 for examination in due course.

Telephone inquiries concerning this decision should be directed to the undersigned at (571) 272-3206.

Liana Chase
Petitions Examiner
Office of Petitions

Cc: ALLEMAN HALL MCCOY RUSSELL & TUTTLE LLP
806 SW BROADWAY, SUITE 600
PORTLAND, OR 97205

UNITED STATES PATENT AND TRADEMARK OFFICE

" 3 0 SEP 2008

Commissioner for Patents
United States Patent and Trademark Office
P.O. Box 1450
Alexandria, VA 22313-1450
www.uspto.gov

TRASK BRITT
P.O. BOX 2550
SALT LAKE CITY UT 84110

In re Application of:	:
JONES, David, H., A., et al.	: DECISION ON PETITION
Application No. 10/644,256	: UNDER 37 CFR 1.55(c)
Filed: August 20, 2003	:
Attorney Docket No. 2578-6077US	:

This is a decision on the "Petition under 37 CFR 1.55(c) For Acceptance Of An Unintentionally Delayed Priority Claim" filed June 04, 2007.

For the reasons discussed below, the petition is **DISMISSED**.

The present petition is not sufficiently clear as to number and type of priority claims which applicant is seeking to add. For example, the conclusion of the petition refers only to granting a "right of priority to PCT International Patent Application No. PCT/EP2003/007690." However, the body of the petition refers to three additional benefit claims not referenced in the conclusion. Moreover, the petition is filed under 37 CFR 1.55(c), which is only applicable to delayed claims for foreign priority. However, the amendment and declaration filed 20 November 2006 include an added claim of domestic priority under 35 U.S.C.120 directed to international application PCT/EP2003/007690 and an added claim of benefit under to U.S. provisional application 60/397,066. 37 CFR 1.78(a)(3) and (a)(6), not 37 CFR 1.55(c), apply to the addition of such claims.

In addition, while a benefit claim directed to a prior-filed international application can under certain circumstances be made as a domestic priority claim under either 35 U.S.C. 120 or as a foreign priority claim under 35 U.S.C. 365(a), an applicant must be clear as to which claim is being made and satisfy the applicable requirements with respect to such a claim. Here, as discussed above, applicant has inconsistently petitioned under 37 CFR 1.55(c), the regulation applicable to foreign priority claims, for the addition of a domestic benefit claim ("continuation-in-part") directed to PCT/EP2003/007690. In addition, from the form of the benefit claim contained in the amended specification, applicant appears to seek the addition of a foreign benefit claim to PCT/EP03/50201. However, the declaration filed 20 November 2006 lists this claim as a domestic priority claim (a proper claim of foreign priority under 35 U.S.C. 365(a) must be made set forth in the declaration or in an ADS). Applicant must clarify the form of benefit claim directed to each of the two international applications and submit the materials required to comply with the requirements of such claims before benefit claims to such applications can be added to the present application.

With respect to the European patent application listed on the declaration, applicants failure to specifically request addition of such claim in the conclusion of the present petition makes it unclear whether applicant is specifically seeking to add such claim to the application.

Finally, it is noted that any petition under 37 CFR 1.55(c), 1.78(a)(3), and 1.78(a)(6) requires a statement that the entire delay from the date the claims were due until the date the claims were filed was unintentional. The present petition includes a statement that: "Pursuant to 37 CFR 1.55(c)(3), applicants submit that: 'the entire delay between the date the claim was due under paragraph a(1) of [Rule 55] and the date claimed [sic] was filed was unintentional.'" This statement is ambiguous as worded, and it does not refer to the delay between the date any additional claims under 37 CFR 1.78(a)(2)(ii) and 1.78(a)(5)(ii) were due and when such claims were filed (referring only to the due date under 37 CFR 1.55(a)(1)).

Applicants must file a revised petition that: (1) clearly identifies the regulations under which it is filed, for example, 37 CFR 1.55(c), 37 CFR 1.78(a)(3), and 37 CFR 1.78(a)(6); (2) expressly identifies the specific delayed benefit claims which applicant seeks to add to the application and the form of such claims (domestic or foreign); (3) complies with all the requirements for adding such claims (e.g., with respect to a foreign priority claim, includes such claim in a revised declaration or ADS; with respect to a domestic benefit claim, includes a proper reference to such application in the first sentence of the specification or in an ADS); and (4) includes a revised statement that is unambiguous and clearly indicates that the entire delay between the date on which the benefit claims were due under 37 CFR 1.78(a)(2)(ii), 1.78(a)(5)(ii), and 1.55(a)(1), and the date such claims were filed, was unintentional.

Further correspondence with respect to this matter should be addressed as follows. No additional petition fee is required:

By mail: Mail Stop PCT Legal Administration
Commissioner for Patents
Post Office Box 1450
Alexandria, VA 22313-1450

By hand: Customer Service Window
Mail Stop PCT Legal Administration
Randolph Building
401 Dulany Street
Alexandria, VA 22314

By fax: (571) 273-8300
ATTN: Office of PCT Legal Administration

Any questions concerning this matter may be directed to Richard M. Ross at (571) 272-3296.

Boris Milef
Legal Examiner
Office of Petitions and PCT Legal Administration

2 1 APR 2009

UNITED STATES PATENT AND TRADEMARK OFFICE

Commissioner for Patents
United States Patent and Trademark Office
P.O. Box 1450
Alexandria, VA 22313-1450
www.uspto.gov

TRASK BRITT
P.O. BOX 2550
SALT LAKE CITY UT 84110

In re Application of:
JONES, David, H., A., et al.
Application No. 10/644,256
Filed: August 20, 2003
Attorney Docket No. 2578-6077US

: DECISION ON RENEWED PETITION

This is a decision on the "Petition under 37 CFR 1.78(a)(3) For Acceptance Of Unintentionally Delayed Priority Claims" filed November 24, 2008, treated herein under 37 CFR 1.78(a)(3) and 1.78(a)(6) and 37 CFR 1.55(c).

For the reasons discussed below, the petition is **DISMISSED**.

37 CFR 1.78(a)(3) applies where an applicant seeks to add a late claim of benefit under 35 U.S.C. 120 and 365(c) to a prior-filed international application designating the United States; 37 CFR 1.78(a)(6) applies where an applicant seeks to add a late claim of priority to a prior-filed provisional application. In the present petition, applicants are seeking to add domestic priority claims to two international applications (PCT/EP2003/007690 and PCT/EP03/50201) and to a U.S. provisional application (60/397,066). Accordingly, the present petition is properly considered under both 37 CFR 1.78(a)(3) and (a)(6).

A petition for acceptance of a claim for late priority under 37 CFR §§ 1.78(a)(3) and 1.78(a)(6) is only applicable to those applications filed on or after November 29, 2000. Further, the petition is appropriate only after the expiration of the period specified in 37 CFR 1.78(a)(2)(ii) and 1.78(a)(5)(ii).

The present non-provisional application was filed after November 29, 2000, and the claims herein for the benefit of priority to the prior-filed applications were submitted after expiration of the periods specified in 37 CFR 1.78(a)(2)(ii) and 1.78(a)(5)(ii). Therefore, this is a proper petition under 37 CFR 1.78(a)(3) and 1.78(a)(6).

A grantable petition under 37 CFR 1.78(a)(3) and 1.78(a)(6) must be accompanied by:

(1) the reference required by 35 U.S.C. 120 and 119(e) and 37 CFR 1.78(a)(2)(i) and 1.78(a)(5)(i) of the prior-filed application, unless previously submitted;
(2) the surcharge set forth in 1.17(t); and
(3) a statement that the entire delay between the date the claim was due under 37 CFR 1.78(a)(2)(ii) and 1.78(a)(5)(ii) and the date the claim was filed was unintentional.

The present petition fails to comply with item (1) above.

The amendment filed herein on 20 November 2006 fails to properly indicate the relationship between the two international applications, as required for a domestic benefit claim. Specifically, the amendment indicates that PCT/EP2003/007690 "claims the benefit of" PCT/EP03/50201. The relationship between the applications is whether the subject application is a continuation, divisional, or continuation-in-part. See MPEP 201.11(III)(A):

> Except for benefit claims to the prior application in a continued prosecution application (CPA), benefit claims under 35 U.S.C. 120, 121, and 365(c) must identify the prior application by application number, or by international application number and international filing date, and indicate the relationship between the applications. See 37 CFR 1.78(a)(2)(i). The relationship between the applications is whether the instant application is a continuation, divisional, or continuation-in-part of the prior nonprovisional application. An example of a proper benefit claim is "this application is a continuation of prior Application No. ---, filed ---." A benefit claim that merely states that "this application claims the benefit of Application No. ---, filed ---" does not comply with 35 U.S.C. 120 and 37 CFR 1.78(a)(2)(i), since the relationship between the applications is not stated.

In addition, where, as here, a chain of domestic priority between multiple applications is asserted, then each application in the chain must include a reference specifically identfying its relationship with any prior-filed applications. See MPEP 201.11(III)(C):

> The reference to the prior applications must identify all of the prior applications and indicate the relationship (i.e., continuation, divisional, or continuation-in-part) between each nonprovisional application in order to establish copendency throughout the entire chain of prior applications. Appropriate references must be made in each intermediate application in the chain of prior applications. If an applicant desires, for example, the following benefit claim: "this application is a continuation of Application No. C, filed ---, which is a continuation of Application No. B, filed ---, which claims the benefit of provisional Application No. A, filed ---," then Application No. C must have a reference to Application No. B and provisional Application No. A, and Application No. B must have a reference to provisional Application No. A.

It is noted that a review of PCT/EP2003/007690 indicates that the first line of the specification of such application does not include a reference identifying the application as a continuation, continuation-in-part, or divisional of PCT/EP03/50201.

Before the petition under 37 CFR 1.78(a)(3) and (a)(6) can be granted, a renewed petition under 37 CFR 1.78(a)(3) and a substitute amendment[1] or supplemental ADS (37 CFR 1.76) which properly sets forth the relationship of the prior-filed international application(s) is required. In addition, any such reference would need to be consistent with a reference in intermediate application PCT/EP2003/007690.[2]

It is apparent that instead of a domestic benefit claim under 35 U.S.C. 365(c), applicant may have intended to make a claim of foreign priority to PCT/EP03/50201 under 35 U.S.C. 365(b). If this is the case, then the claim for foreign priority must be set forth in an oath or declaration or an ADS (see 37 CFR 1.63(c)(2)). Because a proper claim of foreign priority was not made before the expiration of the period set forth in 37 CFR 1.55(a)(1)(I), a petition under 37 CFR 1.55(c) would be required to add such foreign priority claim.

Finally, it is noted that the petition also seeks to add a claim of "domestic priority" to European Patent Application No. 02077953.4. By definition, a domestic priority claim (i.e., a claim under 35 U.S.C. 119(e), 120 or 365(c)) may only be directed to a prior filed U.S. application or to an international application designating the United States. A benefit claim directed to a foreign application such as EP 02077953.4 is a foreign priority claim made under 35 U.S.C. 119(a)-(d) or 365(a)-(b), and the addition of a delayed foreign priority claim requires a grantable petition under 37 CFR 1.55(c). As the present petition does not include a specific request under 37 CFR 1.55(c) to add a foreign benefit claim to European Patent Application No. 02077953.4, such benefit claim may not be added on the present record.

Based on the above, applicants' renewed petition to add benefit claims directed to international applications PCT/EP2003/007690 and PCT/EP03/50201, European Patent Application No. 02077953.4, and U.S. provisional application 60/397,066 is not grantable on the present record.

Further correspondence with respect to this matter should be addressed as follows:

By mail: Mail Stop PCT
Commissioner for Patents
Post Office Box 1450
Alexandria, VA 22313-1450

---

[1] *Note* 37 CFR 1.121

[2] It is noted that the reference to US provisional application 60/397,066 is in acceptable form.

By hand: Customer Service Window
Mail Stop PCT
Randolph Building
401 Dulany Street
Alexandria, VA 22314

By fax: (571) 273-0459
ATTN: Office of PCT Legal Administration

Any questions concerning this matter may be directed to Richard Ross at (571) 272-3296.

Bryan Lin
Legal Examiner
Office of Petitions and PCT Legal Administration

UNITED STATES PATENT AND TRADEMARK OFFICE

09 MAR 2010

Commissioner for Patents
United States Patent and Trademark Office
P.O. Box 1450
Alexandria, VA 22313-1450
www.uspto.gov

TRASK BRITT
P.O. BOX 2550
SALT LAKE CITY UT 84110

In re Application of:	:
JONES, David, H., A., et al.	: DECISION ON RENEWED PETITION
Application No. 10/644,256	:
Filed: August 20, 2003	:
Attorney Docket No. 2578-6077US	:

This is a decision on the renewed "Petition Under 37 CFR §1.78(a)(3) And 37 CFR § 1.78(a)(6) For Acceptance Of Unintentionally Delayed Priority Claims" filed August 21 2009, considered herein under 37 CFR 1.78(a)(3) and (a)(6) and 37 CFR 1.55(c).

For the reasons discussed below, the petition is **DISMISSED**.

1. Claims To Prior-Filed International And Provisional Applications

37 CFR 1.78(a)(3) applies where an applicant seeks to add a late claim of benefit under 35 U.S.C. 120 and 365(c) to a prior-filed international application designating the United States; 37 CFR 1.78(a)(6) applies where an applicant seeks to add a late claim of priority to a prior-filed provisional application. In the present petition, applicants are seeking to add domestic priority claims to two international applications (PCT/EP2003/007690 and PCT/EP03/50201) and to a U.S. provisional application (60/397,066). Accordingly, the present petition is properly considered under both 37 CFR 1.78(a)(3) and (a)(6).

A petition for acceptance of a claim for late priority under 37 CFR 1.78(a)(3) and 1.78(a)(6) is only applicable to those applications filed on or after November 29, 2000. Further, the petition is appropriate only after the expiration of the period specified in 37 CFR 1.78(a)(2)(ii) and 1.78(a)(5)(ii).

The present non-provisional application was filed after November 29, 2000, and the claims herein for the benefit of priority to the prior-filed applications were submitted after expiration of the periods specified in 37 CFR 1.78(a)(2)(ii) and 1.78(a)(5)(ii). Therefore, this is a proper petition under 37 CFR 1.78(a)(3) and 1.78(a)(6).

A grantable petition under 37 CFR 1.78(a)(3) and 1.78(a)(6) must be accompanied by:

(1) the reference required by 35 U.S.C. 120 and 119(e) and 37 CFR 1.78(a)(2)(i) and 1.78(a)(5)(i) of the prior-filed application, unless previously submitted;
(2) the surcharge set forth in 1.17(t); and

(3) a statement that the entire delay between the date the claim was due under 37 CFR 1.78(a)(2)(ii) and 1.78(a)(5)(ii) and the date the claim was filed was unintentional.

As with the previous petition, the present petition fails to comply with item (1) above.

The present petition was accompanied by a revised amendment to the first paragraph of the specification that clarifies applicants' desired benefit claims. The reference is in acceptable form with respect to the claim to international application PCT/EP2003/007690 and, through such international application, to U.S. provisional application 60/397,066. However, the reference with respect to purported international application PCT/EP03/50201 is not acceptable on the present record. Specifically, PCT/EP03/50201 does not appear to have ever been published by the International Bureau (IB). It therefore appears that such application was withdrawn by applicants at some point prior to publication. Applicants have not provided a copy of PCT/EP03/50201 and certification (with documentary support) confirming that such application was not withdrawn prior to the filing of the present application and that it named at least one inventor in common with the present application. Accordingly, it cannot be confirmed on the present record whether the benefit claim directed to this international application is correct and appropriate. See MPEP section 1895.01:

> a national application filed prior to the expiration of this 30 month period will be copending with the international application unless the international application was withdrawn, either generally or as to the United States, prior to the filing of the national application. To determine whether the application was withdrawn, the examiner must either review the Home Copy of the international application file (if the USPTO was the receiving Office), or require applicant to certify that the international application was not withdrawn or considered to be withdrawn, either generally or as to the United States, prior to the filing date of the national application claiming benefit under 35 U.S.C. 120 and 365(c) to such international application.

Before the petition under 37 CFR 1.78(a)(3) and (a)(6) can be granted, a renewed petition under 37 CFR 1.78(a)(3) and a substitute amendment[1] or supplemental ADS (37 CFR 1.76) containing proper references to the prior-filed international and provisional applications is required. If any such renewed petition includes a benefit claim directed to international application PCT/EP03/50201, applicants must provide a copy of PCT/EP03/50201 and certification (with documentary support) confirming that such application was not withdrawn prior to the filing of the present application and that it named at least one inventor in common with the present application.

---

[1] *Note* 37 CFR 1.121

2. **Claim To Prior-Filed Foreign Application EP 02077953.4**

The present petition again requests the addition of a priority claim directed to foreign application EP 02077953.4, filed on July 18, 2002, although the claim is inaccurately characterized as a domestic priority claim under 35 U.S.C. 365(c). 35 U.S.C. 365(c) states that an international application designating the United States may claim domestic priority under 35 U.S.C. 120 with respect to a prior national application or a prior international application designating the United States, and that a national application may claim domestic priority under 35 U.S.C. 120 with respect to a prior international application designating the United States. 35 U.S.C. 365(c) does not apply where, as here, a national application (or an international application designating the United States) seeks to claim the benefit of the filing date of a prior filed foreign application. Rather, applicant's claim for foreign priority with respect to EP 02077953.4 is properly made under 35 U.S.C. 119(a)-(d) and 365(b). It is noted that the declaration filed by applicant on 20 November 2006 includes a claim of foreign priority with respect to EP 02077953 properly made under 35 U.S.C. 119(a)-(d) and 365(b). However, because this claim of foreign priority was not submitted within four months of the filing of the present application, a grantable petition under 37 CFR 1.55(c) is required to add this foreign priority claim.

A grantable petition under 37 CFR 1.55(c) to accept an unintentionally delayed claim for priority requires:

> (1) The nonprovisional application claiming the benefit of an earlier filing date must be filed on or after November 29, 2000;
> (2) the claim submitted with the petition must identify the prior foreign application for which priority is claimed, as well as any foreign application for the same subject matter and having a filing date before that of the application for which priority is claimed, by the application number, country, and the filing date, and be included either in an oath or declaration (37 CFR 1.63(c)(2)) or in an Application Data Sheet (37 CFR 1.76(b)(6);
> (3) the surcharge as set forth in 37 CFR 1.17(t);
> (4) a statement that the entire delay between the date the claim was due under 37 CFR 1.55(a)(1) and the date the claim was filed was unintentional. (The Commissioner may require additional information where there is a question whether the delay was unintentional.); and
> (5) the above-identified nonprovisional application must be filed within 12 months of the filing date of the foreign application.

The present application was filed after November 29, 2000, satisfying item (1), and, as noted above, the declaration filed on 20 November 2006 includes a proper claim directed to the foreign application, satisfying item (2). Applicant has also paid the required petition fee, satisfying item (3), and the present petition includes an acceptable statement of unintentional delay, satisfying item (4). However, on the present record, item (5) above is not satisfied. Specifically, the filing date for the present application (August 20, 2003) is not within 12 months

of the filing date of EP 02077953.4 (July 18, 2002). It is noted that, should a renewed petition successfully add applicant's desired claim of domestic priority to prior filed international application PCT/EP2003/007690 or PCT/EP03/50201, then this final element of a grantable petition under 37 CFR 1.55(c) would be considered satisfied, in that the filing date of the intermediate PCT application would be within 12 months of the filing date of the foreign application.

Based on the above, applicants' renewed petition to add benefit claims directed to international applications PCT/EP2003/007690 and PCT/EP03/50201, European Patent Application No. 02077953.4, and U.S. provisional application 60/397,066 is not grantable on the present record.

Further correspondence with respect to this matter should be addressed as follows:

By mail: Mail Stop PCT
Commissioner for Patents
Post Office Box 1450
Alexandria, VA 22313-1450

By hand: Customer Service Window
Mail Stop PCT
Randolph Building
401 Dulany Street
Alexandria, VA 22314

By fax: (571) 273-0459
ATTN: Office of PCT Legal Administration

Any questions concerning this matter may be directed to Richard Ross at (571) 272-3296.

Bryan Lin

Bryan Lin
Legal Examiner
Office of Petitions and PCT Legal Administration

UNITED STATES PATENT AND TRADEMARK OFFICE

Commissioner for Patents
United States Patent and Trademark Office
P.O. Box 1450
Alexandria, VA 22313-1450
www.uspto.gov

John L. Issac
7114 West Jefferson Avenue, Suite 100
Lakewood, CO 80235-2309

COPY MAILED
SEP 28 2006
OFFICE OF PETITIONS

In re Application of	:	
DeHaan, et al.	:	
Application No.: 10/644,262	:	ON PETITION
Filed: August 21, 2003	:	
Attorney Docket No: 7150.02.01	:	

This is in response to the petition under 37 CFR 1.137(b) filed January 26, 2006.

The petition under 37 CFR 1.137(b) is **granted**.

On November 14, 2003, a "Notice to File Missing Parts of Nonprovisional Application" (the "Notice") was mailed by the Office allowing a two-month period for reply. Extension of time were available pursuant to 37 CFR 1.136(a). The Notice required payment of the filing fee, surcharge and additional claim fees. A proper reply was not received within the allowable period, and the application became abandoned on January 15, 2003. A Notice of Abandonment was mailed on October 27, 2004.

The above-identified application has been abandoned for an extended period of time. The Patent and Trademark Office is relying on petitioner's duty of candor and good faith and accepting the statement that the entire delay in filing the required reply form the due date for the reply until the filing of a grantable petition pursuant to 37 CFR 1.137(b) was unintentional. See Changes to Patent Practice and Procedure, 62 Fed. Reg. at 53160 and 53178; 1203 Off. Gaz. Pat. Office at 88 and 103 (responses to comments 64 and 109) (applicant obligated under 37 CFR 10.18 to inquire into the underlying facts and circumstances when providing the statement required by 37 CFR 1.137(b) to the Patent and Trademark Office.

The filing fee, claim fees, and surcharge were received on January 26, 2006.

The "Change of Correspondence Address" filed January 26, 2006, is noted and made of record.

This application is being forwarded to the Office of Initial Patent Examination for further processing.

Telephone inquiries regarding this decision should be directed to the undersigned at (571) 272-3222.

Kenya A. McLaughlin
Petitions Attorney
Office of Petitions

UNITED STATES PATENT AND TRADEMARK OFFICE

Commissioner for Patents
United States Patent and Trademark Office
P.O. Box 1450
Alexandria, VA 22313-1450
www.uspto.gov

DAVID S. RESNICK
NIXON PEABODY LLP
100 SUMMER STREET
BOSTON, MA 02110

COPY MAILED

APR 2 2 2004

OFFICE OF PETITIONS

In re Application of :
Michael Boger et al :
Application No. 10/644,274 : NOTICE
Filed: August 20, 2003 :
Attorney Docket No. 740789-054350

This is a notice regarding your request for acceptance of a fee deficiency submission under 37 CFR 1.28. On September 1, 1998, the Court of Appeals for the Federal Circuit held that 37 CFR 1.28(c) is the sole provision governing the time for correction of the erroneous payment of the issue fee as a small entity. **See DH Technology v. Synergystex International, Inc. 154 F.3d 1333, 47 USPQ2d 1865 (Fed. Cir. Sept. 1, 1998).**

The Office no longer investigates or rejects original or reissue applications under 37 CFR 1.56. **1098 Off. Gaz. Pat. Office 502 (January 3, 1989)**. Therefore, nothing in this Notice is intended to imply that an investigation was done.

Your fee deficiency submission under 37 CFR 1.28 is hereby **ACCEPTED**.

Inquiries related to this communication should be directed to the Office of Petitions Staff at (703) 305-9285.

This file is being forwarded to Technology Center AU 2812.

Irvin Dingle
Petitions Examiner
Office of Petitions
Office of the Deputy Commissioner
for Patent Examination Policy

UNITED STATES PATENT AND TRADEMARK OFFICE

Commissioner for Patents
United States Patent and Trademark Office
P.O. Box 1450
Alexandria, VA 22313-1450
www.uspto.gov

COURTNEY STANFORD & GREGORY LLP
P.O. BOX 9686
SAN JOSE, CA 95157

MAILED

AUG 3 1 2009

OFFICE OF PETITIONS

In re Application of	:	
Sunil K. Rao, et al.	:	
Application No. 10/644,276	:	DECISION ON PETITION
Filed: August 20, 2003	:	TO WITHDRAW
Attorney Docket No. IPHD.P022	:	FROM RECORD
	:	

This is a decision on the Request to Withdraw as attorney or agent of record under 37 C.F.R. § 1.36(b), filed July 22, 2009.

The request is **APPROVED**.

A grantable request to withdraw as attorney/agent of record must be signed by every attorney/agent seeking to withdraw or contain a clear indication that one attorney is signing on behalf of another/others. A request to withdraw will not be approved unless at least 30 (thirty) days would remain between the date of approval and the later of the expiration date of a time to file a response or the expiration date of the maximum time period which can be extended under 37 C.F.R. § 1.136(a).

The request was signed by Richard L. Gregory on behalf of all attorneys of record. All attorneys/agents have been withdrawn. Applicant is reminded that there is no attorney of record at this time.

All future correspondence will be directed to the first named inventor Sunil K. Rao at the address indicated below.

The application became abandoned for failure to timely respond to the Office action mailed September 4, 2008.

Telephone inquiries concerning this decision should be directed to Terri Williams at 571-272-2991.

Terri Williams
Petitions Examiner
Office of Petitions

cc: **Sunil K. Rao**
3099 Alexis Drive
Palo Alto, CA 94304

UNITED STATES PATENT AND TRADEMARK OFFICE

UNITED STATES DEPARTMENT OF COMMERCE
United States Patent and Trademark Office
Address: COMMISSIONER FOR PATENTS
P.O. Box 1450
Alexandria, Virginia 22313-1450
www.uspto.gov

APPLICATION NUMBER	FILING OR 371(C) DATE	FIRST NAMED APPLICANT	ATTY. DOCKET NO./TITLE
10/644,276	08/20/2003	Sunil K. Rao	IPHD.P022

CONFIRMATION NO. 5176

POWER OF ATTORNEY NOTICE

53186
COURTNEY STANIFORD & GREGORY LLP
P.O. BOX 9686
SAN JOSE, CA 95157

OC000000037577227

Date Mailed: 08/28/2009

NOTICE REGARDING CHANGE OF POWER OF ATTORNEY

This is in response to the Power of Attorney filed 07/22/2009.

- The withdrawal as attorney in this application has been accepted. Future correspondence will be mailed to the new address of record. 37 CFR 1.33.

/tswilliams/

Office of Data Management, Application Assistance Unit (571) 272-4000, or (571) 272-4200, or 1-888-786-0101

UNITED STATES PATENT AND TRADEMARK OFFICE

Commissioner for Patents
United States Patent and Trademark Office
P.O. Box 1450
Alexandria, VA 22313-1450
www.uspto.gov
DRW May-10

LEVINE BAGADE HAN LLP
2400 GENG ROAD, SUITE 120
PALO ALTO CA 94303

MAILED

MAY 24 2010

OFFICE OF PETITIONS

In re Application of :
Rao et al. :
Application Number: 10/644276 :
Filing Date: 08/20/2003 :
For: MATCHING NETWORK SYSTEM :
FOR MOBILE DEVICES :

ON PETITION

This is a decision in response to the petition under 37 CFR 1.137(b)[1] filed on March 4, 2010, to revive the above-identified application.

The petition is **GRANTED**.

This application became abandoned on December 5, 2008, for failure to submit a timely response to the non-final Office action mailed on September 4, 2008, which set a three (3)-month statutory period for reply. No extensions of the time for reply in accordance with 37 CFR 1.136(a) were obtained. Notice of Abandonment was mailed on August 11, 2009.

It is not apparent whether the person signing the statement of unintentional delay was in a position to have firsthand or direct

---

[1] Effective December 1, 1997, the provisions of 37 CFR 1.137(b) now provide that where the delay in reply was unintentional, a petition may be filed to revive an abandoned application or a lapsed patent pursuant to 37 CFR 1.137(b). A grantable petition filed under the provisions of 37 CFR 1.137(b) must be accompanied by:

(1) the required reply, unless previously filed. In a nonprovisional application abandoned for failure to prosecute, the required reply may be met by the filing of a continuing application. In a nonprovisional application filed on or after June 8, 1995, and abandoned for failure to prosecute, the required reply may also be met by the filing of a request for continued examination in compliance with § 1.114. In an application or patent, abandoned or lapsed for failure to pay the issue fee or any portion thereof, the required reply must be the payment of the issue fee or any outstanding balance thereof. In an application abandoned for failure to pay the publication fee, the required reply must include payment of the publication fee.

(2) the petition fee as set forth in 37 CFR 1.17(m);

(3) a statement that the entire delay in filing the required reply from the due date for the reply until the filing of a grantable petition pursuant to 37 CFR 1.137(b) was unintentional. The Director may required additional information where there is a question whether the delay was unintentional; and

(4) any terminal disclaimer (and fee as set forth in 37 CFR 1.20(d)) required pursuant to 37 CFR 1.137(c)).

knowledge of the facts and circumstances of the delay at issue. Nevertheless, such statement is being treated as having been made as the result of a reasonable inquiry into the facts and circumstances of such delay.[2] In the event that such an inquiry has not been made, petitioner must make such an inquiry. If such inquiry results in the discovery that it is not correct that the entire delay in filing the required reply from the due date for the reply until the filing of a grantable petition pursuant to 37 CFR 1.137(b) was unintentional, petitioner must notify the Office.

Receipt of the amendment filed on March 4, 2010 is acknowledged.

Receipt of the power of attorney and change of correspondence address filed on March 4, 2010 is acknowledged. All correspondence will be mailed to the new address of record.

The application will be referred to Technology Center Art Unit 2444 for further processing.

Telephone inquiries concerning this matter may be directed to the undersigned at (571) 272-3231.

D Wood

Douglas I. Wood
Senior Petitions Attorney
Office of Petitions

---

[2] See 37 CFR 10.18(b) and Changes to Patent Practice and Procedure; Final Rule Notice, 62 Fed. Reg. 53131, 53178 (October 10, 1997), 1208 Off. Gaz. Pat. Office 63, 103 (October 21, 1997).

UNITED STATES PATENT AND TRADEMARK OFFICE

Pet. Dec.

COMMISSIONER FOR PATENTS
UNITED STATES PATENT AND TRADEMARK OFFICE
P.O. BOX 1450
ALEXANDRIA, VA 22313-1450
www.uspto.gov

JUN 17 2004

VP
PAPER NO. ___

In re Application of
Lawrence Peska
Serial Number: 10/644,303
Filed: August 20, 2003
For: APPARATUS AND METHOD FOR WASHING OF ITEMS

PETITION UNDER M.P.E.P.708.02 IV

This is in response to the petition filed December 30, 2003, requesting that the above-identified application be granted Special Status under Section 708.02 IV of the MPEP and 37 CFR 1.102(c) (**no fee required**).

The request for Special Status considered under Section 708.02 IV of the MPEP is granted because criteria under 37 CFR 1.102(c) has been met.

Accordingly the petition is **GRANTED.**

Marian C. Knode

Marian C. Knode, Special Programs Examiner
Technology Center 1700
Chemical and Materials Engineering

David Aker
23 Southern Road
Hartsdale NY 10530

UNITED STATES PATENT AND TRADEMARK OFFICE

COMMISSIONER FOR PATENTS
UNITED STATES PATENT AND TRADEMARK OFFICE
P.O. BOX 1450
ALEXANDRIA, VA 22313-1450
www.uspto.gov

PHILIP S. JOHNSON
JOHNSON & JOHNSON
ONE JOHNSON & JOHNSON PLAZA
NEW BRUNSWICK NJ 08933-7003

COPY MAILED

FEB 19 2004

OFFICE OF PETITIONS

In re Application of
Giles-Komar, et al.
Application No. 10/644,308
Filed: August 20, 2003
Attorney Docket No. CEN309 USA NP
For: METHOD FOR GENERATING ANTIBODIES

DECISION ON PETITION

This is a decision on the petition entitled, "PETITION TO CORRECT FILING DATE," filed December 15, 2003 (certificate of mailing date December 8, 2003).

The petition is **DISMISSED**.

Any reconsideration petition must be submitted within TWO (2) MONTHS from the mail date of this decision. Extensions of time under 37 CFR 1.136(a) are permitted.

Petitioner requests the Office change the accorded filing date of the above-identified application. The merits of petitioner's filing date petition will not be addressed until petitioner pays a $130.00 petition fee. A review of Office records indicates that petitioner has not paid this fee.

Further correspondence with respect to this matter should be addressed as follows:

By mail: Mail Stop PETITION
Commissioner for Patents
Post Office Box 1450
Alexandria, VA 22313-1450
ATTN: E. Shirene Willis

By hand: Crystal Plaza 1 Lobby
2011 South Clark Place
Room 1B03
Arlington, VA 22202
ATTN: E. Shirene Willis

By FAX: (703) 872-9306
ATTN: Office of Petitions -- E. Shirene Willis

Telephone inquiries concerning this decision should be directed to the undersigned at (703) 308-6712.

E. Shirene Willis
Senior Petitions Attorney
Office of Petitions
Office of the Deputy Commissioner
for Patent Examination Policy

UNITED STATES PATENT AND TRADEMARK OFFICE

COMMISSIONER FOR PATENTS
UNITED STATES PATENT AND TRADEMARK OFFICE
P.O. BOX 1450
ALEXANDRIA, VA 22313-1450
www.uspto.gov

PHILIP S. JOHNSON
JOHNSON & JOHNSON
ONE JOHNSON & JOHNSON PLAZA
NEW BRUNSWICK NJ 08933-7003

COPY MAILED

APR 30 2004

OFFICE OF PETITIONS

In re Application of
Giles-Komar, et al.
Application No. 10/644,308
Filed: August 20, 2003
Attorney Docket No. CEN309 USA NP
For: METHOD FOR GENERATING ANTIBODIES

DECISION ON PETITION

This is a decision on the petition entitled, "RECONSIDERATION PETITION TO CORRECT FILING DATE," filed April 5, 2004 (certificate of mailing date March 31, 2004). The petition will be treated as a petition under 37 CFR 1.183 to waive 37 CFR 1.10 (a).

The petition is **DISMISSED**.

Any reconsideration petition must be submitted within TWO (2) MONTHS from the mail date of this decision. Extensions of time under 37 CFR 1.136(a) are permitted.

As a preliminary matter, the undersigned apologizes for missing the authorization to charge the petition fee in the petition of December 8, 2003. The $130.00 petition fee has been charged to deposit account no. 10-0750.

Petitioners request that the Office change the accorded filing date of the above-identified application from August 20, 2003 to August 19, 2003. Petitioners state that an Express Mail package bearing Express Mail mailing label no. EU735850727US was submitted to applicants' mail room personnel for mailing on August 19, 2003, but through unforeseeable delay, the package was not deposited into Express Mail until August 20, 2003.

35 U.S.C. § 111(a)(4) states, " The filing date of an application shall be the date on which the specification and any required drawing are received in the Patent and Trademark Office." 35 U.S.C. § 21(a) states, "The Director may be rule prescribe that any paper or fee required to be filed in the Patent and Trademark Office will be considered filed in the Office on the date on which it was deposited with the United States Postal Service or would have been deposited with the United States Postal Service but for postal service interruptions or emergencies designated by the Director." The Director has only exercised his authority for Express Mail. 37 CFR 1.10.

Petitioners admit that the application was deposited in Express Mail with the USPS on August 20, 2003. Therefore, under the language of 37 CFR 1.10(a), this application is entitled to a filing date of August 20, 2003, the actual date of mailing shown by petitioners' Express Mail receipt.

The facts of this case do not establish the existence of extraordinary circumstances, where justice requires the waiver or suspension of the language set forth in 37 CFR 1.10(a) under 37 CFR 1.183.

Petitioners have not submitted any statement from the USPS acknowledging that an error was made in the handling of petitioners' Express Mail package. Instead, petitioners admit the package was deposited with the USPS as Express Mail on August 20, 2003.

Even if the Office were to accept the argument that employee error is an extraordinary situation, the petition also lacks a showing that justice requires waiver of the rule. The evidence presented indicates that petitioners were aware that the application had to be filed no later than August 19, 2003, in order to obtain the benefits available under 35 U.S.C. 119 based on petitioners' prior provisional application. Yet, petitioners waited until the last day provided in the statute for claiming benefits under 35 U.S.C. 119 to complete the application in final form for filing. Those who file at the end of a statutory bar year (35 U.S.C. 102(b)) or a priority year (35 U.S.C. 119) or who delay filing a continuing application until the last possible day for establishing continuity (35 U.S.C. 120 or 121), do not leave any opportunity to overcome any error which might occur in filing the application. The Office, where it has the power to do so, should not relax the requirements of established practice in order to save an applicant from the consequences of his delay. *See Ex parte Sassin*, 1906 Dec. Comm'r. Pat. 205, 206 (Comm'r Pat. 1906) and *compare Ziegler v. Baxter v. Natta*, 159 U.S.P.Q. 378, 379 (Comm'r Pat. 1968) *and Williams v. The Five Platters, Inc.*, 510 F.2d 963, 184 U.S.P.Q. 744 (C.C.P.A. 1975).

The application is entitled to a filing date as of the date of deposit in Express Mail, or August 20, 2003.

After the mailing of this decision, the application will be forwarded to Technology Center 1600 for examination in due course.

Further correspondence with respect to this matter should be addressed as follows:

Further correspondence with respect to this matter should be addressed as follows:

By mail: Mail Stop PETITION
Commissioner for Patents
Post Office Box 1450
Alexandria, VA 22313-1450

By hand: Crystal Plaza 1 Lobby
2011 South Clark Place
Room 1B03
Arlington, VA 22202

By FAX: (703) 872-9306
ATTN: Office of Petitions

Telephone inquiries concerning this decision should be directed to the undersigned at (703) 308-6712.

E. Shirene Willis

E. Shirene Willis
Senior Petitions Attorney
Office of Petitions
Office of the Deputy Commissioner
for Patent Examination Policy

THIS PAGE BLANK (USPTO)

FILE COPY

UNITED STATES PATENT AND TRADEMARK OFFICE

UNITED STATES DEPARTMENT OF COMMERCE
United States Patent and Trademark Office
Address: COMMISSIONER FOR PATENTS
P.O. Box 1450
Alexandria, Virginia 22313-1450
www.uspto.gov

APPL NO.	FILING OR 371 (c) DATE	ART UNIT	FIL FEE REC'D	ATTY.DOCKET NO	DRAWINGS	TOT CLMS	IND CLMS
10/644,318	08/19/2003	2127	1092	OR03-04001	3	39	3

CONFIRMATION NO. 6010

CORRECTED FILING RECEIPT

OC000000012614087

22835
PARK, VAUGHAN & FLEMING LLP
508 SECOND STREET
SUITE 201
DAVIS, CA 95616

Date Mailed: 05/12/2004

Receipt is acknowledged of this regular Patent Application. It will be considered in its order and you will be notified as to the results of the examination. Be sure to provide the U.S. APPLICATION NUMBER, FILING DATE, NAME OF APPLICANT, and TITLE OF INVENTION when inquiring about this application. Fees transmitted by check or draft are subject to collection. Please verify the accuracy of the data presented on this receipt. **If an error is noted on this Filing Receipt, please write to the Office of Initial Patent Examination's Filing Receipt Corrections, facsimile number 703-746-9195. Please provide a copy of this Filing Receipt with the changes noted thereon. If you received a "Notice to File Missing Parts" for this application, please submit any corrections to this Filing Receipt with your reply to the Notice. When the USPTO processes the reply to the Notice, the USPTO will generate another Filing Receipt incorporating the requested corrections (if appropriate).**

Applicant(s)

Jaime Singson, Cambridge, MA;
Xiaohua Chen, Palo Alto, CA;

Domestic Priority data as claimed by applicant

Foreign Applications

If Required, Foreign Filing License Granted: 11/14/2003

Projected Publication Date: 02/24/2005

Non-Publication Request: No

Early Publication Request: No

Title

Method and apparatus for facilitating data stewardship for metadata in an ETL and data warehouse system

Preliminary Class

707

LICENSE FOR FOREIGN FILING UNDER
Title 35, United States Code, Section 184
Title 37, Code of Federal Regulations, 5.11 & 5.15

GRANTED

The applicant has been granted a license under 35 U.S.C. 184, if the phrase "IF REQUIRED, FOREIGN FILING LICENSE GRANTED" followed by a date appears on this form. Such licenses are issued in all applications where the conditions for issuance of a license have been met, regardless of whether or not a license may be required as set forth in 37 CFR 5.15. The scope and limitations of this license are set forth in 37 CFR 5.15(a) unless an earlier license has been issued under 37 CFR 5.15(b). The license is subject to revocation upon written notification. The date indicated is the effective date of the license, unless an earlier license of similar scope has been granted under 37 CFR 5.13 or 5.14.

This license is to be retained by the licensee and may be used at any time on or after the effective date thereof unless it is revoked. This license is automatically transferred to any related applications(s) filed under 37 CFR 1.53(d). This license is not retroactive.

The grant of a license does not in any way lessen the responsibility of a licensee for the security of the subject matter as imposed by any Government contract or the provisions of existing laws relating to espionage and the national security or the export of technical data. Licensees should apprise themselves of current regulations especially with respect to certain countries, of other agencies, particularly the Office of Defense Trade Controls, Department of State (with respect to Arms, Munitions and Implements of War (22 CFR 121-128)); the Office of Export Administration, Department of Commerce (15 CFR 370.10 (j)); the Office of Foreign Assets Control, Department of Treasury (31 CFR Parts 500+) and the Department of Energy.

NOT GRANTED

No license under 35 U.S.C. 184 has been granted at this time, if the phrase "IF REQUIRED, FOREIGN FILING LICENSE GRANTED" DOES NOT appear on this form. Applicant may still petition for a license under 37 CFR 5.12, if a license is desired before the expiration of 6 months from the filing date of the application. If 6 months has lapsed from the filing date of this application and the licensee has not received any indication of a secrecy order under 35 U.S.C. 181, the licensee may foreign file the application pursuant to 37 CFR 5.15(b).

UNITED STATES PATENT AND TRADEMARK OFFICE

Commissioner for Patents
United States Patent and Trademark Office
P.O. Box 1450
Alexandria, VA 22313-1450
www.uspto.gov

NOVARTIS
CORPORATE INTELLECTUAL PROPERTY
ONE HEALTH PLAZA 430/2
EAST HANOVER, NJ 07936-1080

COPY MAILED

OCT 1 4 2004

OFFICE OF PETITIONS

In re Application of
Gurdip Bhalay et al
Application No. 10/644,328
Filed: August 20, 2003
Attorney Docket No. 4-31388B

DECISION GRANTING PETITION
UNDER 37 CFR 1.313(c)(2)

This is a decision on the petition, filed October 8, 2004, under 37 CFR 1.313(c)(2) to withdraw the above-identified application from issue after payment of the issue fee.

The petition is **GRANTED**.

The above-identified application is withdrawn from issue for consideration of a submission under 37 CFR 1.114 (request for continued examination). See 37 CFR 1.313(c)(2).

Petitioner is advised that the issue fee paid on September 10, 2004 in the above-identified application cannot be refunded. If, however, the above-identified application is again allowed, petitioner may request that it be applied towards the issue fee required by the new Notice of Allowance.[1]

Telephone inquiries should be directed to the undersigned at (571) 272-3218.

This matter is being referred to Technology Center AU 1626 for processing of the request for continued examination under 37 CFR 1.114 and for consideration of the concurrently filed Information Disclosure Statement.

Frances Hicks
Petitions Examiner
Office of Petitions
Office of the Deputy Commissioner
for Patent Examination Policy

[1] *The request to apply the issue fee to the new Notice may be satisfied by completing and returning the new Issue Fee Transmittal Form PTOL-85(b), which includes the following language thereon: "Commissioner for Patents is requested to apply the Issue Fee and Publication Fee (if any) or re-apply any previously paid issue fee to the application identified above." Petitioner is advised that, whether a fee is indicated as being due or not, the Issue Fee Transmittal Form* ***must*** *be completed and timely submitted to avoid abandonment. Note the language in bold text on the first page of the Notice of Allowance and Fee(s) Due (PTOL-85).*

SPE: K. Shaver

SPE RESPONSE FOR CERTIFICATE OF CORRECTION

Paper No.: _____

DATE : 8/24/06

TO SPE OF : ART UNIT 3754

SUBJECT : Request for Certificate of Correction for Appl. No.: 10/644,332 Patent No.: 7048157

Please respond to this request for a certificate of correction within 7 days.

Please review the requested changes/corrections as shown in the **COCIN** document(s) in the IFW application image. No new matter should be introduced, nor should the scope or meaning of the claims be changed.

Please complete the response (see below) and forward the completed response to scanning using document code **COCX**.

Lamonte M. Newsome
Certificates of Correction Branch
703-308-9390 ext. 112

Thank You For Your Assistance

The request for issuing the above-identified correction(s) is hereby:

Note your decision on the appropriate box.

- ☑ **Approved** — All changes apply.
- ☐ **Approved in Part** — Specify below which changes **do not** apply.
- ☐ **Denied** — State the reasons for denial below.

Comments: _____

_____

_____

_____

_____

_____ 3754

SPE **Art Unit**

UNITED STATES PATENT AND TRADEMARK OFFICE

Commissioner for Patents
United States Patent and Trademark Office
P.O. Box 1450
Alexandria, VA 22313-1450
www.uspto.gov

MICHAEL P. MORRIS
BOEHRINGER INGELHEIM CORPORATION
900 RIDGEBURY ROAD
P. O. BOX 368
RIDGEFIELD CT 06877-0368

COPY MAILED

FEB 2 8 2006

OFFICE OF PETITIONS

In re Application of :
Bernd Disse :
Application No. 10/644,333 : DECISION ON PETITION
Filed: August 20, 2003 :
Attorney Docket No. 1/1196-1-C1 :

This is a decision on the petition under 37 CFR 1.181, filed January 13, 2006, to withdraw the holding of abandonment.

On October 15, 2004, the Office mailed a Notice of Non-Compliant Amendment, which set a one-month extendable period to respond. In the absence of timely reply, the application became abandoned on November 16, 2004. On December 14, 2005, the Office mailed a Notice of Abandonment.

In the present petition, the practitioner, Andrea D. Small, asserts that she did not receive the Notice of October 15, 2004. The practitioner states that a search of the file jacket and docket records reveals that the Notice was not received. In support of the assertion of non-receipt, the practitioner submits the following exhibits: (1) Exhibit A is a copy of the electronic List of Actions logged for the case where no log was entered for a Office communication dated October 15, 2004; (2) Exhibit B is a copy of all replies docketed for a date three months from the mail date of the non-received Notice, where no due date was generated for Office communication dated October 15, 2004; (3) Exhibit C is a mail log for the period starting October 15, 2004 through November 17, 2004, where no entry of an Office communication was made for the aforementioned case; and, (4) Exhibit D is a statement from practitioner's docket manager, Nancy O'Grady, indicating common practice at practitioner's office for mail log entries.

A review of the record indicates no irregularity in the mailing of the Notice, and in the absence of any irregularity in the mailing, there is a strong presumption that the Notice was properly mailed to the address of record. This presumption may be overcome by a showing that the Notice was not in fact received. To establish non-receipt of an Office communication, applicant must include a statement

from the practitioner, stating that the practitioner did not receive the Office communication and attesting to the fact that a search of the file jacket and docket records indicates that the Office communication was not received. A copy of the docket record where the non-received Office communication would have been entered had it been received and docketed must be attached to and referenced in practitioner's statement.[1] For example, if a three-month period for reply was set in the non-received Office action, a copy of the docket report showing all replies docketed for a date three months from the mail date of the non-received Office action must be submitted as documentary proof of non-receipt of the Office action. The showing outlined above may not be sufficient if there are circumstances that point to a conclusion that the Office action may have been lost after receipt rather than a conclusion that the Office action was lost in the mail (*e.g.* if the practitioner has a history of not receiving Office actions).

After reviewing the documents submitted on petition, the Office concludes that the showing of record is sufficient to warrant withdrawal of the holding of abandonment. The practitioner for the applicant submitted copies of mail logs and docket records where the Notice would have been entered had it been received and docketed. The practitioner attested to the fact that a search of the file jacket and docket records indicated that the Notice was not received. Furthermore, the docket manager provided an explanation of the docketing system. As applicant has presented the required showing, the petition to withdraw the holding of abandonment is **granted**.

As applicant has established non-receipt of the Notice of Non-Compliant Amendment of October 15, 2004, the Technology Center Art Unit 1618 is directed to re-mail the Notice of Non-Compliant Amendment and restart the period for reply.

This matter is being referred to Technology Center Art Unit 1618 for action consistent with this decision.

Telephone inquiries related to this decision may be directed to the undersigned at (571) 272-3211.

Christina Tartera Donnell

Christina Tartera Donnell
Senior Petitions Attorney
Office of Petitions

[1] M.P.E.P. § 711.03(c); See Notice entitled "Withdrawing the Holding of Abandonment When Office Actions Are Not Received," 1156 O.G. 53 (November 16, 1993).

UNITED STATES PATENT AND TRADEMARK OFFICE

Commissioner for Patents
United States Patent and Trademark Office
P.O. Box 1450
Alexandria, VA 22313-1450
www.uspto.gov

Myers Bigel Sibley & Sajovec
PO Box 37428
Raleigh NC 27627

COPY MAILED

OCT 2 1 2003

OFFICE OF PETITIONS

In re Application of :
Seong-Ho Jeong :
Application No. 10/644,338 :
Filed: August 20, 2003 :
Attorney Docket No. 5649-1150 :

DECISION ON PETITION

This is a decision on the petition under 37 CFR 1.10(c), filed September 29, 2003, requesting that the above-identified application be accorded a filing date of August 20, 2003, rather than the presently accorded filing date of August 21, 2003.

Petitioner alleges that the application was deposited in Express Mail service on August 20, 2003. The petition is accompanied by a copy of Express Mail label No. EV318420868US. The same Express Mail label number was placed on the original application papers located in the official file. Although the date-in on the Express Mail label is blank, the label contains a United States Postal Service (USPS) stamp of August 20, 2003. Additionally, the computer printout from the United States Postal Service Track and Confirm Database indicated that the USPS accepted a package bearing Express Mail label No. EV318420868US on August 20, 2003, at 5:28 pm in Raleigh, NC 27612.

In view of the above, the petition is **granted**. No petition fee is necessary.

This application will be accorded a filing date of August 20, 2003.

Telephone inquiries should be directed to the undersigned at (703) 306-5589.

Christina Tartera Donnell

Christina Tartera Donnell
Senior Petitions Attorney
Office of Petitions

Copied from 10664338 on 09-12-2003

UNITED STATES PATENT AND TRADEMARK OFFICE

UNITED STATES DEPARTMENT OF COMMERCE
United States Patent and Trademark Office
Address: COMMISSIONER FOR PATENTS
P.O. Box 1450
Alexandria, Virginia 22313-1450
www.uspto.gov

APPL NO.	FILING OR 371 (c) DATE	ART UNIT	FIL FEE REC'D	ATTY.DOCKET NO	DRAWINGS	TOT CLMS	IND CLMS
10/644,339	08/20/2003	3612	948	998-904IP	7	31	3

CONFIRMATION NO. 5860

20792
MYERS BIGEL SIBLEY & SAJOVEC
PO BOX 37428
RALEIGH, NC 27627

CORRECTED FILING RECEIPT

OC000000011755954

Date Mailed: 01/23/2004

Receipt is acknowledged of this regular Patent Application. It will be considered in its order and you will be notified as to the results of the examination. Be sure to provide the U.S. APPLICATION NUMBER, FILING DATE, NAME OF APPLICANT, and TITLE OF INVENTION when inquiring about this application. Fees transmitted by check or draft are subject to collection. Please verify the accuracy of the data presented on this receipt. **If an error is noted on this Filing Receipt, please write to the Office of Initial Patent Examination's Filing Receipt Corrections, facsimile number 703-746-9195. Please provide a copy of this Filing Receipt with the changes noted thereon. If you received a "Notice to File Missing Parts" for this application, please submit any corrections to this Filing Receipt with your reply to the Notice. When the USPTO processes the reply to the Notice, the USPTO will generate another Filing Receipt incorporating the requested corrections (if appropriate).**

Applicant(s)

Girma Gebreselassie, Southfield, MI;
Matt Starling, Ypsilanti, MI;
Anthony J. Messina, Royal Oak, MI;
Surendra Khambete, West Bloomfield, MI;

Domestic Priority data as claimed by applicant

This application is a CIP of 10/256,695 09/27/2002

Foreign Applications

If Required, Foreign Filing License Granted: 11/14/2003

Projected Publication Date: To Be Determined - pending completion of Missing Parts

Non-Publication Request: No

Early Publication Request: No

Title

Vehicle cockpit assemblies having integrated dash insulators, instrument panels and floor coverings, and methods of installing same within vehicles

Preliminary Class
296

LICENSE FOR FOREIGN FILING UNDER
Title 35, United States Code, Section 184
Title 37, Code of Federal Regulations, 5.11 & 5.15

GRANTED

The applicant has been granted a license under 35 U.S.C. 184, if the phrase "IF REQUIRED, FOREIGN FILING LICENSE GRANTED" followed by a date appears on this form. Such licenses are issued in all applications where the conditions for issuance of a license have been met, regardless of whether or not a license may be required as set forth in 37 CFR 5.15. The scope and limitations of this license are set forth in 37 CFR 5.15(a) unless an earlier license has been issued under 37 CFR 5.15(b). The license is subject to revocation upon written notification. The date indicated is the effective date of the license, unless an earlier license of similar scope has been granted under 37 CFR 5.13 or 5.14.

This license is to be retained by the licensee and may be used at any time on or after the effective date thereof unless it is revoked. This license is automatically transferred to any related applications(s) filed under 37 CFR 1.53(d). This license is not retroactive.

The grant of a license does not in any way lessen the responsibility of a licensee for the security of the subject matter as imposed by any Government contract or the provisions of existing laws relating to espionage and the national security or the export of technical data. Licensees should apprise themselves of current regulations especially with respect to certain countries, of other agencies, particularly the Office of Defense Trade Controls, Department of State (with respect to Arms, Munitions and Implements of War (22 CFR 121-128)); the Office of Export Administration, Department of Commerce (15 CFR 370.10 (j)); the Office of Foreign Assets Control, Department of Treasury (31 CFR Parts 500+) and the Department of Energy.

NOT GRANTED

No license under 35 U.S.C. 184 has been granted at this time, if the phrase "IF REQUIRED, FOREIGN FILING LICENSE GRANTED" DOES NOT appear on this form. Applicant may still petition for a license under 37 CFR 5.12, if a license is desired before the expiration of 6 months from the filing date of the application. If 6 months has lapsed from the filing date of this application and the licensee has not received any indication of a secrecy order under 35 U.S.C. 181, the licensee may foreign file the application pursuant to 37 CFR 5.15(b).

UNITED STATES PATENT AND TRADEMARK OFFICE

Commissioner for Patents
United States Patent and Trademark Office
P. O. Box 1450
Alexandria, VA 22313-1450
www.uspto.gov

CARLSON GASKEY & OLDS
400 W. MAPLE ROAD, STE. 350
BIRMINGHAM, MI 48009

COPY MAILED

JUL 31 2006

OFFICE OF PETITIONS

In re Application of :
Daniel J. Philpott :
Application No. 10/644,354 : ON PETITION
Filed: August 20, 2003 :
Attorney Docket No. 60,130-1752;03MRA0141 :

This is a decision on the petition filed, February 27, 2006 under 37 CFR 1.137(b), to revive the above-identified application.

The petition is **GRANTED.**

The above-identified application became abandoned for failure to reply within the meaning of 37 CFR 1.113 in a timely manner to the final Office action mailed June 1, 2005, which set a shortened statutory period for reply of three (3) months. No extension of time under the provisions of 37 CFR 1.136(a) were obtained. Accordingly, the above-identified application became abandoned on September 2, 2005.

The above-identified application is being revived solely for purposes of continuity with a Request For Continued Examination (RCE) filed on February 27, 2006.

Telephone inquiries concerning this decision should be directed to Irvin Dingle at (571) 272-3210.

This matter is being referred to Technology Center AU 3683 for further processing.

Irvin Dingle
Petitions Examiner
Office of Petitions

UNITED STATES PATENT AND TRADEMARK OFFICE

Commissioner for Patents
United States Patent and Trademark Office
P.O. Box 1450
Alexandria, VA 22313-1450
www.uspto.gov

VOLPE AND KOENIG, P.C.
DEPT. ICC
UNITED PLAZA, SUITE 1600
30 SOUTH 17TH STREET
PHILADELPHIA PA 19103

COPY MAILED

APR 13 2007

OFFICE OF PETITIONS

In re Application of
Jaeyoung Kwak et al
Application No. 10/644,361
Filed: August 20, 2003
Attorney Docket No. I-2-0304.1US

ON PETITION

This is a decision on the petition, filed April 13, 2007, under 37 CFR 1.313(c)(2) to withdraw the above-identified application from issue after payment of the issue fee.

The petition is **GRANTED.**

The above-identified application is withdrawn from issue for consideration of a submission under 37 CFR 1.114 (request for continued examination). See 37 CFR 1.313(c)(2).

Petitioner is advised that the issue fee paid on March 12, 2007 in the above-identified application cannot be refunded. If, however, the above-identified application is again allowed, petitioner may request that it be applied towards the issue fee required by the new Notice of Allowance.[1]

Telephone inquiries should be directed to the undersigned at (571) 272-3208.

The examiner of Technology Center AU 2611 will consider the request for continued examination under 37 CFR 1.114.

Karen Creasy
Petitions Examiner
Office of Petitions

---

[1] The request to apply the issue fee to the new Notice may be satisfied by completing and returning the new Issue Fee Transmittal Form PTOL-85(b), which includes the following language thereon: "Commissioner for Patents is requested to apply the Issue Fee and Publication Fee (if any) or re-apply any previously paid issue fee to the application identified above." Petitioner is advised that, whether a fee is indicated as being due or not, the Issue Fee Transmittal Form **must** be completed and timely submitted to avoid abandonment. Note the language in bold text on the first page of the Notice of Allowance and Fee(s) Due (PTOL-85).

SPE RESPONSE FOR CERTIFICATE OF CORRECTION

Paper No.: X

DATE : April 15, 2008

TO SPE OF : ART UNIT 2611

SUBJECT : Request for Certificate of Correction for Appl. No.: 10/644361 Patent No.: 7289552 B2

A response is requested with respect to a request for a certificate of correction.

With respect to the change(s) requested to correct Office and/or Applicant's errors, should the patent read as shown in the certificate of correction attached herewith or the COCIN document(s), in IFW images for the above-identified patented application? No new matter should be introduced, nor should the scope or meaning of the claims be changed.

If the response is for an IFW, within **7** days, please complete and forward the response, to the employee (named below) via scanning into application images, using document code **COCX**.

DO NOT SENT TO ATTORNEY

If the response is for a paper file wrapper, please complete the response and forward the response with the paper file wrapper, to the employee (named below), within **7** days, to:

Certificates of Correction Branch (CofC)
South Tower - 9A22
Palm Location 7580

You can fax the Directors/SPE response to 571-270-9990

LAMONTE NEWSOME
Certificates of Correction Branch
703-308-9390 ext. 112

Thank You For Your Assistance

The request for issuing the above-identified correction(s) is hereby:

Note your decision on the appropriate box.

- ☑ **Approved** — **All** changes apply.
- ☐ **Approved in Part** — Specify below which changes **do not** apply.
- ☐ **Denied** — State the reasons for denial below.

Comments: Corrections are for typos and do not affect the scope of the claims. - VP.

M. [signature]
SPE

2611
Art Unit

UNITED STATES PATENT AND TRADEMARK OFFICE

Commissioner for Patents
United States Patent and Trademark Office
P.O. Box 1450
Alexandria, VA 22313-1450
www.uspto.gov

FINNEGAN, HENDERSON, FARABOW, GARRETT & DUNNER LLP
901 NEW YORK AVENUE, NW
WASHINGTON DC 20001-4413

COPY MAILED

DEC 2 8 2009

OFFICE OF PETITIONS

In re Application of
Jonathan D. Zook
Application No. 10/644,389
Filed: August 19, 2003
Attorney Docket No. 08303.0042-06

DECISION ON PETITIONS
UNDER 37 CFR 1.78(a)(3) AND (a)(6)

This is a decision on the petition under 37 CFR 1.78(a)(3) which is being treated as petitions under 37 CFR 1.78(a)(3) and 1.78(a)(6), filed August 6, 2009, to accept an unintentionally delayed claim under 35 U.S.C. 120 and 119(e) for the benefit of the prior-filed applications set forth in the concurrently filed amendment.

The petitions are **GRANTED.**

A petition for acceptance of a claim for late priority under 37 CFR §§ 1.78(a)(3) and 1.78(a)(6) is only applicable to those applications filed on or after November 29, 2000. Further, the petition is appropriate only after the expiration of the period specified in 37 CFR §§ 1.78(a)(2)(ii) and 1.78(a)(5)(ii). In addition, the petition under 37 CFR §§ 1.78(a)(3) and 1.78(a)(6) must be accompanied by:

(1) the reference required by 35 U.S.C. §§ 120 and 119(e) and 37 CFR §§ 1.78(a)(2)(i) and 1.78(a)(5)(i) of the prior-filed application, unless previously submitted;
(2) the surcharge set forth in § 1.17(t); and
(3) a statement that the entire delay between the date the claim was due under 37 CFR §§ 1.78(a)(2)(ii) and 1.78(a)(5)(ii) and the date the claim was filed was unintentional. The Director may require additional information where there is a question whether the delay was unintentional.

Additionally, the instant nonprovisional application must be pending at the time of filing of the reference to the prior-filed provisional application as required by 37 CFR 1.78(a)(5)(ii). Further, the nonprovisional application claiming the benefit of the prior-filed provisional application must have been filed within twelve months of the filing date of the prior-filed provisional application.

All the above requirements having been satisfied, the late claim for benefit of priority under 35 U.S.C. §§ 120 and 119(e) is accepted as being unintentionally delayed.

The granting of the petition to accept the delayed benefit claim to the prior-filed applications under 37 CFR §§ 1.78(a)(3) and 1.78(a)(6) should not be construed as meaning that this application is entitled to the benefit of the filing date of the prior-filed applications. In order for this application to be entitled to the benefit of the prior-filed applications, all other requirements under 35 U.S.C. §§120 and 1.78(a)(1) and (a)(2) and under 35 U.S.C. §119(e) and 37 CFR 1.78(a)(4) and (a)(5) must be met. Similarly, the fact that the corrected Filing Receipt accompanying this decision on petition includes the prior-filed applications should not be construed as meaning that applicant is entitled to the claim for benefit of priority to the prior-filed applications noted thereon. Accordingly, the examiner will, in due course, consider this benefit claim and determine whether the application is entitled to the benefit of the earlier filing date.

A corrected Filing Receipt, which includes the priority claim to the prior-filed applications, accompanies this decision on petition.

Any questions concerning this matter may be directed to Carl Friedman at (571) 272-6842. All other inquiries concerning either the examination procedures or status of the application should be directed to the Technology Center.

This application is being forwarded to Technology Center Art Unit 1796 for consideration by the examiner of the claim under 35 U.S.C. § §120 and 119(e) of the prior-filed nonprovisional and provisional applications.

David Bucci
Petitions Examiner
Office of Petitions

ATTACHMENT : Corrected Filing Receipt

UNITED STATES PATENT AND TRADEMARK OFFICE

UNITED STATES DEPARTMENT OF COMMERCE
United States Patent and Trademark Office
Address: COMMISSIONER FOR PATENTS
P.O. Box 1450
Alexandria, Virginia 22313-1450
www.uspto.gov

APPLICATION NUMBER	FILING or 371(c) DATE	GRP ART UNIT	FIL FEE REC'D	ATTY.DOCKET.NO	TOT CLAIMS	IND CLAIMS
10/644,389	08/19/2003	1796	1050	08303.0042-06	17	2

CONFIRMATION NO. 6131

CORRECTED FILING RECEIPT

22852
FINNEGAN, HENDERSON, FARABOW, GARRETT & DUNNER LLP
901 NEW YORK AVENUE, NW
WASHINGTON, DC 20001-4413

Date Mailed: 12/24/2009

Receipt is acknowledged of this non-provisional patent application. The application will be taken up for examination in due course. Applicant will be notified as to the results of the examination. Any correspondence concerning the application must include the following identification information: the U.S. APPLICATION NUMBER, FILING DATE, NAME OF APPLICANT, and TITLE OF INVENTION. Fees transmitted by check or draft are subject to collection. Please verify the accuracy of the data presented on this receipt. **If an error is noted on this Filing Receipt, please submit a written request for a Filing Receipt Correction. Please provide a copy of this Filing Receipt with the changes noted thereon. If you received a "Notice to File Missing Parts" for this application, please submit any corrections to this Filing Receipt with your reply to the Notice. When the USPTO processes the reply to the Notice, the USPTO will generate another Filing Receipt incorporating the requested corrections**

Applicant(s)

Jonathan D. Zook, Santa Clarita, CA;
Susan E. DeMoss, Van Nuys, CA;
David W. Jordan, Northridge, CA;
Chandra B. Rao, Valencia, CA;
Hakam Singh, Bradbury, CA;
Ahmed Sharaby, Canyon Country, CA;

Power of Attorney: The patent practitioners associated with Customer Number 22852

Domestic Priority data as claimed by applicant

This application is a CON of 10/302,177 11/21/2002 ABN
which is a CON of 09/756,573 01/08/2001 PAT 6,509,418
which is a CIP of 08/928,972 09/12/1997 PAT 6,172,179
which is a CIP of 08/802,130 02/19/1997 PAT 5,912,319
and said 09/756,573 01/08/2001
claims benefit of 60/182,396 02/14/2000
and claims benefit of 60/215,548 06/30/2000
and is a CIP of 09/318,500 05/25/1999 PAT 6,232,401
which is a DIV of 08/802,130 02/19/1997 PAT 5,912,319

Foreign Applications

If Required, Foreign Filing License Granted: 11/14/2003

The country code and number of your priority application, to be used for filing abroad under the Paris Convention, is **US 10/644,389**

Projected Publication Date: Not Applicable

Non-Publication Request: No

Early Publication Request: No

Title

SEALANTS AND POTTING FORMULATIONS INCLUDING MERCAPTO-TERMINATED POLYMERS PRODUCED BY THE REACTION OF A POLYTHIOL AND POLYVINYL ETHER MONOMER

Preliminary Class

525

PROTECTING YOUR INVENTION OUTSIDE THE UNITED STATES

Since the rights granted by a U.S. patent extend only throughout the territory of the United States and have no effect in a foreign country, an inventor who wishes patent protection in another country must apply for a patent in a specific country or in regional patent offices. Applicants may wish to consider the filing of an international application under the Patent Cooperation Treaty (PCT). An international (PCT) application generally has the same effect as a regular national patent application in each PCT-member country. The PCT process **simplifies** the filing of patent applications on the same invention in member countries, but **does not result** in a grant of "an international patent" and does not eliminate the need of applicants to file additional documents and fees in countries where patent protection is desired.

Almost every country has its own patent law, and a person desiring a patent in a particular country must make an application for patent in that country in accordance with its particular laws. Since the laws of many countries differ in various respects from the patent law of the United States, applicants are advised to seek guidance from specific foreign countries to ensure that patent rights are not lost prematurely.

Applicants also are advised that in the case of inventions made in the United States, the Director of the USPTO must issue a license before applicants can apply for a patent in a foreign country. The filing of a U.S. patent application serves as a request for a foreign filing license. The application's filing receipt contains further information and guidance as to the status of applicant's license for foreign filing.

Applicants may wish to consult the USPTO booklet, "General Information Concerning Patents" (specifically, the section entitled "Treaties and Foreign Patents") for more information on timeframes and deadlines for filing foreign patent applications. The guide is available either by contacting the USPTO Contact Center at 800-786-9199, or it can be viewed on the USPTO website at http://www.uspto.gov/web/offices/pac/doc/general/index.html.

For information on preventing theft of your intellectual property (patents, trademarks and copyrights), you may wish to consult the U.S. Government website, http://www.stopfakes.gov. Part of a Department of Commerce initiative, this website includes self-help "toolkits" giving innovators guidance on how to protect intellectual property in specific countries such as China, Korea and Mexico. For questions regarding patent enforcement issues, applicants may call the U.S. Government hotline at 1-866-999-HALT (1-866-999-4158).

LICENSE FOR FOREIGN FILING UNDER

Title 35, United States Code, Section 184

Title 37, Code of Federal Regulations, 5.11 & 5.15

GRANTED

The applicant has been granted a license under 35 U.S.C. 184, if the phrase "IF REQUIRED, FOREIGN FILING LICENSE GRANTED" followed by a date appears on this form. Such licenses are issued in all applications where the conditions for issuance of a license have been met, regardless of whether or not a license may be required as set forth in 37 CFR 5.15. The scope and limitations of this license are set forth in 37 CFR 5.15(a) unless an earlier license has been issued under 37 CFR 5.15(b). The license is subject to revocation upon written notification. The date indicated is the effective date of the license, unless an earlier license of similar scope has been granted under 37 CFR 5.13 or 5.14.

This license is to be retained by the licensee and may be used at any time on or after the effective date thereof unless it is revoked. This license is automatically transferred to any related applications(s) filed under 37 CFR 1.53(d). This license is not retroactive.

The grant of a license does not in any way lessen the responsibility of a licensee for the security of the subject matter as imposed by any Government contract or the provisions of existing laws relating to espionage and the national security or the export of technical data. Licensees should apprise themselves of current regulations especially with respect to certain countries, of other agencies, particularly the Office of Defense Trade Controls, Department of State (with respect to Arms, Munitions and Implements of War (22 CFR 121-128)); the Bureau of Industry and Security, Department of Commerce (15 CFR parts 730-774); the Office of Foreign AssetsControl, Department of Treasury (31 CFR Parts 500+) and the Department of Energy.

NOT GRANTED

No license under 35 U.S.C. 184 has been granted at this time, if the phrase "IF REQUIRED, FOREIGN FILING LICENSE GRANTED" DOES NOT appear on this form. Applicant may still petition for a license under 37 CFR 5.12, if a license is desired before the expiration of 6 months from the filing date of the application. If 6 months has lapsed from the filing date of this application and the licensee has not received any indication of a secrecy order under 35 U.S.C. 181, the licensee may foreign file the application pursuant to 37 CFR 5.15(b).

UNITED STATES PATENT AND TRADEMARK OFFICE

Commissioner for Patents
United States Patent and Trademark Office
P.O. Box 1450
Alexandria, VA 22313-1450
www.uspto.g

Owen L. Lamb
P.O. Box 386
Prescott, Arizona 86302-0386

Date Mailed : November 5, 2007
Serial No. :10/644419
Patent No. :6,955,025 B2
Patent Issued :October 18, 2005
Inventor(s) : James G. P. Dehlsen, et al.
Title : SELF-ERECTING TOWER AND METHOD FOR RAISING THE TOWER

Re: Request for Certificate of Correction

Consideration has been given your request for the issuance of a certificate of correction for the above-identified patent.

Respecting the alleged error the omission of inventors' names, the inventors are printed in accordance with the Declaration submitted at the time of filing the application. Therefore, no correction is in order here under Rules 1.322 or 1.323.

In view of the foregoing, your request is hereby denied.

However, your attention is directed to C.F.R. 1.324, wherein a request is being made to add or delete inventor(s), after issuance of the patent.

Magdalene Talley
Decisions and Certificate
Of Correction Branch
(703) 308-9390 ext. 116
FAX 571-270-9942

/mt

UNITED STATES PATENT AND TRADEMARK OFFICE

COMMISSIONER FOR PATENTS
UNITED STATES PATENT AND TRADEMARK OFFICE
P.O. BOX 1450
ALEXANDRIA, VA 22313-1450
WWW.USPTO.GOV

Paper No. None

3M INNOVATIVE PROPERTIES COMPANY
PO BOX 33427
ST. PAUL MN 55133-3427

COPY MAILED

NOV 0 5 2004

OFFICE OF PETITIONS

In re Application of :
Joseph R. Bechtel et al. :
Application No. 10/644,460 :
Date Deposited: August 21, 2003 :
Attorney Docket No. 58889US002
1004-082US01 :
Title: CENTRALIZED MANAGEMENT :
OF PACKAGING DATA HAVING :
MODULAR REMOTE DEVICE CONTROL
ARCHITECTURE

DECISION ON
PETITION UNDER
37 C.F.R. §1.10(D)

BACKGROUND

This is a decision on the Petition under 37 C.F.R. §1.10(d), filed September 27, 2004, requesting that application number 10/644,460 be accorded a filing date of August 20, 2003.

The application was deposited on December 24, 2003.

Petitioner has alleged that the application was deposited on August 20, 2003, and the incorrect date was written on the Express Mail label. With his petition, Petitioner has included a copy of a receipt and the Express Mail label bearing the number EV326584758US[1].

As set forth above, the Express Mail label itself bears the date "8/30/03." A check of the Office's USPS Express Mail Finder Database computer program was inconclusive. A check of the United States

1 It is noted that this same Express Mail number appears on the Patent Application Transmittal Letter which was included on filing.

Postal Service's website (http://www.usps.com/shipping/trackandconfirm.htm) was equally inconclusive, as the relevant data is stored offline.

THE RELEVANT PORTION OF THE C.F.R.

37 C.F.R. § 1.10: Filing of correspondence by "Express Mail."

(d) Any person filing correspondence under this section that was received by the Office and delivered by the "Express Mail Post Office to Addressee" service of the USPS, who can show that the "date-in" on the "Express Mail" mailing label or other official notation entered by the USPS was incorrectly entered or omitted by the USPS, may petition the Director to accord the correspondence a filing date as of the date the correspondence is shown to have been deposited with the USPS, provided that:
(1) The petition is filed promptly after the person becomes aware that the Office has accorded, or will accord, a filing date based upon an incorrect entry by the USPS;
(2) The number of the "Express Mail" mailing label was placed on the paper(s) or fee(s) that constitute the correspondence prior to the original mailing by "Express Mail"; and
(3) The petition includes a showing which establishes, to the satisfaction of the Director, that the requested filing date was the date the correspondence was deposited in the "Express Mail Post Office to Addressee" service prior to the last scheduled pickup for that day. Any showing pursuant to this paragraph must be corroborated by evidence from the USPS or that came into being after deposit and within one business day of the deposit of the correspondence in the "Express Mail Post Office to Addressee" service of the USPS.

As stated above, Petitioner has met the second requirement above.

Regarding the first requirement, the application was filed in late August of 2003. The filing receipt which bears a filing date of August 21, 2003 was mailed on November 17, 2003. More than 7 months later, Petitioner filed a request for a corrected filing receipt. Three months later, Petitioner submitted the instant petition. As such, this petition was filed more than 10 months after the mailing of the filing receipt, and the relevant regulation requires any petition under this section to be filed promptly. As such, Petitioner cannot meet this requirement. Petitioner may wish to consider having 37 C.F.R. §1.10(d)(1) waived via the filing of a petition under 37 C.F.R. §1.183.

Regarding the third requirement above, Petitioner has neither submitted a statement from a postal employee attesting that the incorrect date was placed on the mailing label, nor has he submitted documentary evidence which would substantiate his claim, such as a page from a log book, that came into being within one day of the correspondence in question.

CONCLUSION

Accordingly, the petition is **DISMISSED.**

Any renewed petition may be submitted by mail[2], hand-delivery[3], or facsimile[4].
Extensions of time under 37 CFR 1.136(a) are permitted. The reply should include a cover letter entitled "Renewed Petition Under 37 CFR 1.10(d)". This is not a final agency action within the meaning of 5 U.S.C 704.

The reply should display "Please deliver to Paul Shanoski, c/o Office of Petitions" in a prominent manner. The Petitioner may wish to consider telephoning the undersigned at the number provided below to confirm that the documents were delivered to the undersigned. Please note that the delivery process within the PTO can take as much as three weeks.

It is noted that the address listed on the petition differs from the address of record. The application file does not indicate a change of correspondence address has been filed in this case, although the address given on the petition differs from the address of record. If petitioner desires to receive future correspondence regarding this application, the change of correspondence address must be submitted. A courtesy copy of this decision will be mailed to petitioner. However, all future correspondence will be directed to the address of record until such time as appropriate instructions are received to the contrary. Petitioner will not receive future correspondence unless a Change of Correspondence Address Form (PTO/SB/122) is submitted for the above-identified application. A blank Change of Correspondence Address Form (PTO/SB/122) may be found at http://www.uspto.gov/web/forms/sb0122.pdf.

The application file will be retained in the Office of Petitions for two (2) months.

---

2 Mail Stop Petition, Commissioner for Patents, United States Patent and Trademark Office, P.O. Box 1450, Alexandria, VA, 22313-1450.

3 Customer Window, Mail Stop Petition, Crystal Plaza Two, Lobby, Room 1B03, Arlington, Virginia 22202.

4 (703) 872-9306 - please note this is a central facsimile number, and as such, there will be a delay in the delivery of the facsimile to the undersigned.

The general phone number for the Office of Petitions which should be used for status requests is (571) 272-3282. Telephone inquiries regarding *this decision* should be directed to the undersigned at (571) 272-3225.

Paul Shanoski
Senior Attorney
Office of Petitions
United States Patent and Trademark Office

cc: SHUMAKER & SIEFFERT, P. A.
8425 SEASONS PARKWAY
SUITE 105
ST. PAUL, MN 55125

UNITED STATES PATENT AND TRADEMARK OFFICE

Commissioner for Patents
United States Patent and Trademark Office
P.O. Box 1450
Alexandria, VA 22313-1450
www.uspto.gov

BASCH & NICKERSON LLP
1777 PENFIELD ROAD
PENFIELD, NY 14526

COPY MAILED

AUG 24 2005

OFFICE OF PETITIONS

In re Application of :
Ricardo L. De Queiroz et al :
Application No. 10/644,472 : DECISION GRANTING PETITION
Filed: August 20, 2003 : UNDER 37 CFR 1.313(c)(2)
Attorney Docket No. A2456 :

This is a decision on the petition, filed August 23, 2005, under 37 CFR 1.313(c)(2) to withdraw the above-identified application from issue after payment of the issue fee.

The petition is **GRANTED**.

The above-identified application is withdrawn from issue for consideration of a submission under 37 CFR 1.114 (request for continued examination). See 37 CFR 1.313(c)(2).

Petitioner is advised that the issue fee paid on June 9, 2005 in the above-identified application cannot be refunded. If, however, the above-identified application is again allowed, petitioner may request that it be applied towards the issue fee required by the new Notice of Allowance.[1]

Telephone inquiries should be directed to the undersigned at (571) 272-3218.

This matter is being referred to Technology Center AU 2861 for processing of the request for continued examination under 37 CFR 1.114 and for consideration of the Information Disclosure Statement.

Frances Hicks
Petitions Examiner
Office of Petitions

---

[1] *The request to apply the issue fee to the new Notice may be satisfied by completing and returning the new Issue Fee Transmittal Form PTOL-85(b), which includes the following language thereon: "Commissioner for Patents is requested to apply the Issue Fee and Publication Fee (if any) or re-apply any previously paid issue fee to the application identified above." Petitioner is advised that, whether a fee is indicated as being due or not, the Issue Fee Transmittal Form* **must** *be completed and timely submitted to avoid abandonment. Note the language in bold text on the first page of the Notice of Allowance and Fee(s) Due (PTOL-85).*

UNITED STATES PATENT AND TRADEMARK OFFICE

Commissioner for Patents
United States Patent and Trademark Office
P.O. Box 1450
Alexandria, VA 22313-1450
www.uspto.gov

OSTROLENK FABER GERB & SOFFEN
1180 AVENUE OF THE AMERICAS
NEW YORK, NY 10036-8403

COPY MAILED

OCT 0 5 2005

OFFICE OF PETITIONS

In re Application of :
Hiroyuki Ishizaki :
Application No. 10/644,487 : ON PETITION
Filed: August 20, 2003 :
Attorney Docket No. P/1071-1598 :

This is a decision on the petition under 37 CFR 1.313(c)(2), filed September 28, 2005, to withdraw the above-identified application from issue after payment of the issue fee.

The petition is **GRANTED**.

The above-identified application is withdrawn from issue for consideration of a submission under 37 CFR 1.114 (request for continued examination). See 37 CFR 1.313(c)(2).

Petitioner is advised that the issue fee paid on May 31, 2005 in the above-identified application cannot be refunded. If, however, the above-identified application is again allowed, petitioner may request that it be applied towards the issue fee required by the new Notice of Allowance.[1]

Telephone inquiries should be directed to Wan Laymon at (571) 272-3220.

This matter is being referred to Technology Center AU 2841 for processing of the request for continued examination under 37 CFR 1.114.

Wan Laymon
Petitions Examiner
Office of Petitions

[1] The request to apply the issue fee to the new Notice may be satisfied by completing and returning the new Issue Fee Transmittal Form PTOL-85(b), which includes the following language thereon: "Commissioner for Patents is requested to apply the Issue Fee and Publication Fee (if any) or re-apply any previously paid issue fee to the application identified above." Petitioner is advised that, whether a fee is indicated as being due or not, the Issue Fee Transmittal Form **must** be completed and timely submitted to avoid abandonment. Note the language in bold text on the first page of the Notice of Allowance and Fee(s) Due (PTOL-85).

UNITED STATES PATENT AND TRADEMARK OFFICE

Commissioner for Patents
United States Patent and Trademark Office
P.O. Box 1450
Alexandria, VA 22313-1450
www.uspto.gov

DAVID I. ROCHE
BAKER & MCKENZIE
130 E. RANDOLPH DRIVE
CHICAGO IL 60601

COPY MAILED

SEP 12 2006

OFFICE OF PETITIONS

In re Application of
Douglas J. Hidding
Application No. 10/644,491
Filed: August 20, 2003
Attorney Docket No.: BMO-129

ON PETITION

This is a decision on the petition filed February 13, 2006, under 37 CFR 1.181, to withdraw the holding of abandonment for the above-identified application.

The petition under 37 CFR 1.181 is **GRANTED**.

The application was held abandoned for failure to timely submit a timely response to the non-Final Office Action mailed June 30, 2005, which set a three month period for reply. Accordingly, a Notice of Abandonment was mailed February 2, 2006.

Petitioner asserts that a response was filed and, in support, petitioner has submitted, *inter alia*, a copy of the response in the form of an amendment, a three month extension of time request and a post card receipt date stamped December 27, 2005 by the USPTO.

A search of the application file and the USPTO records reveals that in fact, an amendment and three month extension of time were filed on December 27, 2005. Accordingly, the Notice of Abandonment mailed February 2, 2006 was mailed in error and is hereby withdrawn. No petition fee is due and none has been charged.

This matter will be referred to Technology Center 3727 for appropriate action on the amendment filed December 27, 2005, a copy of which was submitted upon petition.

Telephone inquiries concerning this matter may be directed to the undersigned Petitions Attorney at (571) 272-3212.

Patricia Faison-Ball
Senior Petitions Attorney
Office of Petitions

UNITED STATES PATENT AND TRADEMARK OFFICE

COMMISSIONER FOR PATENTS
UNITED STATES PATENT AND TRADEMARK OFFICE
P.O. BOX 1450
ALEXANDRIA, VA 22313-1450
www.uspto.gov

Paper No.

ERIC K SATERMO
REGISTERED PATENT AGENT
P.O. BOX 19099
IRVINE, CA 92623

COPY MAILED

JUN 0 3 2005

OFFICE OF PETITIONS

In re Application of	:	
Carter et al.	:	DECISION ON PETITION
Application No. 10/644,508	:	
Filed: August 19, 2003	:	
Atty Docket No. 703714.4012	:	
	:	

This is a decision on the "PETITION FOR REVIVAL OF APPLICATION FOR PATENT ABANDONED UNINTENTIONALLY UNDER 37 C.F.R. § 1.137(b)," filed May 2, 2005, in the above-identified application.

The petition under § 1.137(b) is **GRANTED**.

The above-identified application became abandoned for failure to timely pay the issue fee (and publication fee) within the three-month statutory period for reply set in the Notice of Allowance mailed October 27, 2004. No extensions of time are permitted for transmitting issue fees (or publication fees). Accordingly, the above-identified application became abandoned on January 28, 2005. A courtesy Notice of Abandonment was mailed on March 3, 2005.

On instant petition, petitioner included the petition fee, the required reply in the form of payment of the issue fee (and publication fee)[1] and a statement that the entire delay was

[1] There was not a distinct but concurrent requirement for corrected drawings.

unintentional. Petitioner has, thereby, met the requirements for revival under § 1.137(b).

The Publishing Division has been advised of this decision. The application file has thereby been forwarded to the Publishing Division for processing into a patent.

Telephone inquiries related to this decision should be directed to the undersigned at (571) 272-3219.

Nancy Johnson
Senior Petitions Attorney
Office of Petitions

UNITED STATES PATENT AND TRADEMARK OFFICE

Commissioner for Patents
United States Patent and Trademark Office
P.O. Box 1450
Alexandria, VA 22313-1450
www.uspto.gov

THE PROCTER & GAMBLE COMPANY
Global Legal Department - IP
Sycamore Building - 4th Floor
299 East Sixth Street
CINCINNATI OH 45202

COPY MAILED

OCT 27 2008

OFFICE OF PETITIONS

In re Application of :
Paul Dana Gruenbacher et al. :
Application No. 10/644,537 : DECISION ON PETITION
Filed: August 20, 2003 :
Attorney Docket No. 9345 :

This is a decision on the petition under the unintentional provisions of 37 CFR 1.137(b), filed July 17, 2008, to revive the above-identified application.

The petition is **GRANTED**.

This application became abandoned for failure to (a) timely pay the issue and publication fees on or before June 17, 2008, and (b) submit corrected drawings, as required by the Notice of Allowance and Fee(s) Due, mailed March 17, 2008. Accordingly, the date of abandonment of this application is June 18, 2008.

The petition satisfies the requirements of 37 CFR 1.137(b) in that petitioner has supplied (1) the reply in the form of payment of the issue fee of $1440.00 and the publication fee of $300.00, and corrected drawings (2) the petition fee of $1540.00; and (3) a proper statement of unintentional delay.

Telephone inquiries concerning this decision should be directed to JoAnne Burke at (571) 272-4584.

This application is being referred to the Office of Data Management for processing into a patent.

Ramesh Krishnamurthy

Ramesh Krishnamurthy
Petitions Examiner
Office of Petitions

RECEIVED
CENTRAL FAX CENTER
JUL 17 2008

PETITION FOR REVIVAL OF AN APPLICATION FOR PATENT ABANDONED UNINTENTIONALLY UNDER 37 CFR 1.137(b)	Docket Number 9345

First Named Inventor: Dana Paul Gruenbacher

Application No.: 10/644,537 Art Unit: 1615

Filed: August 20, 2003 Examiner: Sharon E. Kennedy

Title: Self-Inflating Article

Attention: Office of Petitions
Mail Stop Petition
Commissioner for Patents
P.O. Box 1450
Alexandria, VA 22313-1450
FAX (571) 273-8300

NOTE: If information or assistance is needed in completing this form, please contact Petitions Information at (571) 272-3282.

The above-identified application became abandoned for failure to file a timely and proper reply to a notice or action by the United States Patent and Trademark Office. The date of abandonment is the day after the expiration date of the period set for reply in the Office notice or action plus any extensions of time actually obtained.

APPLICANT HEREBY PETITIONS FOR REVIVAL OF THIS APPLICATION

NOTE: A grantable petition requires the following items:
(1) Petition fee;
(2) Reply and/or issue fee;
(3) Terminal disclaimer – required for all utility applications filed before June 8, 1995; and for all design applications; and
(4) Statement that the entire delay was unintentional.

1. Petition fee
[X] Authorization is given to charge the required fee under 37 CFR 1.17(m), and any additional fees that may be required in connection with submission of this petition, or to credit any overpayment, to Deposit Account No. 16-2480 in the name of The Procter & Gamble Company.

2. Reply and/or Issue Fee
A. The reply to the last Communication from the Office in the form of transmittal of replacement drawings
[] has been filed previously on _____.
[X] is enclosed herewith.

07/18/2008 VBUI22 00000001 162480 10644537
01 FC:1453 1540.00 DA

B. The issue fee(s)
[] has been paid previously on _____.
[X] transmittal form is enclosed herewith.

3. Terminal disclaimer

[X] Since this utility application was filed on or after June 8, 1995, no terminal disclaimer is required.

[] A terminal disclaimer disclaiming the required period of time is enclosed herewith.

4. Statement. The entire delay in filing the required reply from the due date for the required reply until the filing of a grantable petition under 37 CFR 1.137(b) was unintentional. [NOTE: The United States Patent and Trademark Office may require additional information if there is a question as to whether either the abandonment or the delay in filing a petition under 37 CFR 1.137(b) was unintentional (MPEP 711.03(c), subsections (III)(C) and(D))].

July 17, 2008
Date

Bridget Murray
Signature

Telephone Number: (513) 626-0575

Bridget Murray
Typed or printed name

Registration Number: 52,555

CUSTOMER NO.: 27752

Enclosures: [] Reply
[X] Issue Fee(s) Transmittal Form
[] Terminal Disclaimer Form
[] Additional sheets containing statements establishing unintentional delay
[X] Transmittal of Replacement Drawings
[X] Replacement Drawings

10/644537 Examiner: KENNEDY, SHARON GAU: 1615
Inventor: GRUENBACHER , DANA, et al Classification: 424/401.000
Status: 164 - ABANDONED -- FAILURE TO PAY ISSUE FEE
Title: SELF-INFLATING ARTICLE
Start Date: End Date:

bib_fee report (10 items, not sorted)

Acct Date	Seq. Num.	Tran Type	Fee Code	Fee Amount	Mailroom Date	Payment Method
07/18/2008	1	1	1453	$1,540.00	07/17/2008	DA 162480
07/18/2008	2	1	1501	$1,440.00	07/17/2008	DA 162480
07/18/2008	4	1	8001	$9.00	07/17/2008	DA 162480
07/18/2008	3	1	1504	$300.00	07/17/2008	DA 162480
03/04/2008	1	1	1252	$460.00	02/19/2008	DA 162480
04/21/2006	5	1	1051	$130.00	09/24/2003	DA 162480
09/26/2003	1413		8021	$40.00	09/26/2003	DA 162480
08/22/2003	29	1	1001	$750.00	08/20/2003	DA 162480
08/22/2003	30	1	1201	$84.00	08/20/2003	DA 162480
08/22/2003	31	1	1202	$198.00	08/20/2003	DA 162480

UNITED STATES PATENT AND TRADEMARK OFFICE

Commissioner for Patents
United States Patent and Trademark Office
P.O. Box 1450
Alexandria, VA 22313-1450
www.uspto.gov

HEWLETT PACKARD COMPANY
P O BOX 272400, 3404 E. HARMONY ROAD
INTELLECTUAL PROPERTY ADMINISTRATION
FORT COLLINS, CO 80527-2400

COPY MAILED

AUG 11 2005

OFFICE OF PETITIONS

In re Application of :
Christopher J. Bostak et al :
Application No. 10/644,542 : DECISION GRANTING PETITION
Filed: August 20, 2003 : UNDER 37 CFR 1.313(c)(2)
Attorney Docket No. 200208755-1 :

This is a decision on the petition, filed August 9, 2005, under 37 CFR 1.313(c)(2) to withdraw the above-identified application from issue after payment of the issue fee.

The petition is **GRANTED**.

The above-identified application is withdrawn from issue for consideration of a submission under 37 CFR 1.114 (request for continued examination). See 37 CFR 1.313(c)(2).

Petitioner is advised that the issue fee paid on April 25, 2005 in the above-identified application cannot be refunded. If, however, the above-identified application is again allowed, petitioner may request that it be applied towards the issue fee required by the new Notice of Allowance.[1]

Telephone inquiries should be directed to the undersigned at (571) 272-3218.

This matter is being referred to Technology Center AU 2817 for processing of the request for continued examination under 37 CFR 1.114 and for consideration of the Information Disclosure Statement.

Frances Hicks
Petitions Examiner
Office of Petitions

---

[1] *The request to apply the issue fee to the new Notice may be satisfied by completing and returning the new Issue Fee Transmittal Form PTOL-85(b), which includes the following language thereon: "Commissioner for Patents is requested to apply the Issue Fee and Publication Fee (if any) or re-apply any previously paid issue fee to the application identified above." Petitioner is advised that, whether a fee is indicated as being due or not, the Issue Fee Transmittal Form* ***must*** *be completed and timely submitted to avoid abandonment. Note the language in bold text on the first page of the Notice of Allowance and Fee(s) Due (PTOL-85).*

UNITED STATES PATENT AND TRADEMARK OFFICE

Commissioner for Patents
United States Patent and Trademark Office
P.O. Box 1450
Alexandria, VA 22313-1450
www.uspto.gov

HEWLETT PACKARD COMPANY
PO BOX 272400
3404 E. HARMONY ROAD INTELLECTUAL PROPERTY ADMINISTRATION
FORT COLLINS CO 80527-2400

COPY MAILED

SEP 12 2006

OFFICE OF PETITIONS

In re Application of :
Bostak et al. :
Application No. 10/644,542 :
Filed: August 20, 2003 :
Attorney Docket No. 200208755-1 :

DECISION ON PETITION

This is a decision on the petition under 37 CFR 1.137(b), filed March 28, 2006, to revive the above-identified application.

This application became abandoned for failure to pay the issue and publication fees as required by the Notice of Allowance and Fee(s) Due mailed on August 19, 2005, which set a three (3) month statutory period for reply. Accordingly, the application became abandoned on November 20, 2005. A Notice of Abandonment was mailed on March 17, 2006.

Petitioner has met the requirements under 37 CFR 1.137(b). Accordingly, the petition is **granted.**

This matter is being forwarded to the Office of Patent Publication for processing into a patent.

Telephone inquiries concerning the issuance of the application into a patent should be directed to the Office of Patent Publication, Customer Service at (571) 272-4200.

Telephone inquiries specifically concerning this decision should be directed to the undersigned at (571) 272-3211.

Christina Tartera Donnell

Christina Tartera Donnell
Senior Petitions Attorney
Office of Petitions

UNITED STATES PATENT AND TRADEMARK OFFICE

COMMISSIONER FOR PATENTS
UNITED STATES PATENT AND TRADEMARK OFFICE
P.O. BOX 1450
ALEXANDRIA, VA 22313-1450
www.uspto.gov

Paper No.

PATTON BOGGS LLP
8484 WESTPARK DRIVE
SUITE 900
MCLEAN, VA 22102

COPY MAILED

MAY 13 2004

OFFICE OF PETITIONS

In re Application of:	:	
Davidson et al.	:	
Application No. 10/644,550	:	DECISION GRANTING
Filed: August 21, 2003	:	PETITION UNDER
Title of Invention: STENT WITH	:	37 CFR 1.47(a)
PROTRUDING BRANCH PORTION FOR	:	
BIFURCATED VESSELS	:	

This is in response to a Petition under 37 CFR 1.47, filed March 17, 2004, to allow the other inventor(s) to proceed with the application on behalf of himself or herself and the nonsigning inventor. The petition is properly treated under 37 CFR 1.47(a)

The petition is **granted**.

The above-identified application and papers have been reviewed and found in compliance with 37 CFR 1.47(a). This application is hereby accorded Rule 1.47(a) status.

Petitioner has shown that the non-signing inventors, Eitan Konstantino and Tanhum Feld, refuse to join in the application.

As provided in Rule 1.47(a), this Office will forward notice of this application's filing to the non-signing inventor at the addresses given in the Petition. Notice of the filing of this application will also be published in the Official Gazette.

The application file is being returned to the Office of Initial Patent Examination for continued processing.

Telephone inquiries related to this decision may be directed to the undersigned at (703) 305-0014.

Derek L. Woods
Petitions Attorney
Office of Petitions

UNITED STATES PATENT AND TRADEMARK OFFICE

Commissioner for Patents
United States Patent and Trademark Office
P.O. Box 1450
Alexandria, VA 22313-1450
www.uspto.gov

KENNETH F. KOZIK, ESQ.
HOLLAND & KNIGHT LLP
10 ST. JAMES AVENUE
BOSTON, MA 02116

COPY MAILED
JUN 0 5 2006
OFFICE OF PETITIONS

In re Application of :
Sandra Leigh Hatfield et al :
Application No. 10/644,552 : DECISION GRANTING PETITION
Filed: August 19, 2003 : UNDER 37 CFR 1.313(c)(2)
Attorney Docket No. 102121.00014 :

This is a decision on the petition, filed June 2, 2006, under 37 CFR 1.313(c)(2) to withdraw the above-identified application from issue after payment of the issue fee.

The petition is **GRANTED**.

The above-identified application is withdrawn from issue for consideration of a submission under 37 CFR 1.114 (request for continued examination). See 37 CFR 1.313(c)(2).

Petitioner is advised that the issue fee paid on April 18, 2006 in the above-identified application cannot be refunded. If, however, the above-identified application is again allowed, petitioner may request that it be applied towards the issue fee required by the new Notice of Allowance.[1]

Telephone inquiries should be directed to the undersigned at (571) 272-3218.

This matter is being referred to Technology Center AU 3765 for processing of the request for continued examination under 37 CFR 1.114 and for consideration of the Information Disclosure Statement.

Frances Hicks
Petitions Examiner
Office of Petitions

C:\Documents and Settings\FHicks\My Documents\470\June9\644552.wpd

---

[1] *The request to apply the issue fee to the new Notice may be satisfied by completing and returning the new Part B – Fee(s) Transmittal Form (along with any balance due at the time of submission), which includes the following language thereon: "The Director of the USPTO is requested to apply the Issue Fee and Publication Fee (if any) or to re-apply any previously paid issue fee in the application identified above. Petitioner is advised that, whether a fee is indicated as being due or not, the Issue Fee Transmittal Form must be completed and timely submitted to avoid abandonment. Note the language in bold text on the first page of the Notice of Allowance and Fee(s) Due (PTOL-85).*

UNITED STATES PATENT AND TRADEMARK OFFICE

Commissioner for Patents
United States Patent and Trademark Office
P.O. Box 1450
Alexandria, VA 22313-1450
www.uspto.gov

SAMUELS K. GILES
7312 WOODSMAN CIR.
HOLLAND, OH 43528

COPY MAILED

DEC 16 2005

OFFICE OF PETITIONS

In re Application of :
Samuel K. Giles et al :
Application No. 10/644,572 : ON PETITION
Filed: August 21, 2003 :
For: Vehicle Security System :

This is a decision on the petition under 37 CFR 1.181, filed July 28, 2005, to withdraw the holding of abandonment for the above-identified application.

The petition is **DISMISSED**.

Any request for reconsideration of this decision must be submitted within TWO (2) MONTHS from the mail date of this decision. The reconsideration request should include a cover letter entitled "Renewed Petition under 37 CFR 1.181." Petitioner is advised that this is **not** a final agency action.

The above-identified application became abandoned for failure to reply in a timely manner to the non-final Office action mailed October 6, 2004, which set a shortened statutory period for reply of three (3) months. A two (2) month extension of time under the provisions of 37 CFR 1.136(a) was obtained.[1] Accordingly, the above-identified application became abandoned on March 7, 2005.

The file record fails to disclose the presence any interview summary record or other communication, oral or written, between petitioners herein and any employee of the U.S. Patent and Trademark Office (USPTO) regarding the extension of time fees in this matter. Petitioners should note that all business with the USPTO should be transacted in writing. The action of the USPTO will be based exclusively on the written record in the Office. No attention will be paid to any alleged oral promise, stipulation, or understanding in relation to which there is disagreement or doubt. *Note* 37 CFR 1.2.

Petitioners are further advised that, while an applicant may prosecute his own application, he is charged with knowledge of the patent statutes, rules and regulations. Therefore, petitioners'

[1] The fee for a three (3) month extensions of time was $510.00 and petitioners paid a total of $285.00 as of March 4, 2005.

detrimental reliance on oral advice, or advice to which there may be disagreement or doubt as to the content of the conversation, is not grounds for withdrawal of the holding of abandonment in this application. Petitioners are ultimately responsible for prosecuting their own application and for timely submitting the reply necessary to maintain pendency of the application and no attempt should be made to shift this burden to the USPTO.

In view of the above, the holding of abandonment is proper and will not be withdrawn.

Petitioners may wish to consider filing a petition under 37 CFR 1.137 to revive this application.

Finally, the petition encloses a $225.00 check intended for a 3-month extension of time. However, an extension of time under 37 CFR 1.136 may only be obtained prior to expiration of the maximum extendable reply period. The request for extension of time submitted with the instant petition is not applicable, in that, it is filed subsequent to the maximum extendable reply period, i.e., subsequent to April 6, 2005. Petitioners may request a refund of this fee by writing to: Mail Stop 16, Director of the US Patent and Trademark Office, P.O. Box 1450, Alexandria, VA 22313-1450. A copy of this decision should accompany petitioner's request. Alternatively, petitioners may request that this $225.00 payment be applied towards the fee for filing a petition to revive under 37 CFR 1.137.

Telephone inquiries concerning this decision should be directed to Wan Laymon at (571) 272-3220.

Frances Hicks
Lead Petitions Examiner
Office of Petitions

UNITED STATES PATENT AND TRADEMARK OFFICE

Commissioner for Patents
United States Patent and Trademark Office
P.O. Box 1450
Alexandria, VA 22313-1450
www.uspto.gov

SAMUELS K. GILES
7312 WOODSMAN CIR.
HOLLAND, OH 43528

COPY MAILED

FEB 0 8 2006

OFFICE OF PETITIONS

In re Application of :
Samuel K. Giles et al :
Application No. 10/644,572 : ON PETITION
Filed: August 21, 2003 :
For: VEHICLE SECURITY SYSTEM :

This is a decision on the petition under 37 CFR 1.137(b), filed December 23, 2005, to revive the above-identified application.

The petition is **GRANTED**.

The above-identified application became abandoned for failure to reply in a timely manner to the non-final Office action mailed October 6, 2004, which set a shortened statutory period for reply of three (3) months. A two (2) month extension of time under the provisions of 37 CFR 1.136(a) was obtained.[1] Accordingly, the above-identified application became abandoned on March 7, 2005.

The instant petition satisfies the conditions for revival pursuant to the provisions of 37 CFR 1.137(b) in that (1) the reply in the form of an amendment; (2) the petition fee; and (3) the required statement of unintentionally delay have been received. Accordingly, the reply to the non-final Office action of October 6, 2004 is accepted as having been unintentionally delayed.

This matter is being referred to Technology Center AU 2632.

Telephone inquiries concerning this decision should be directed to Wan Laymon at (571) 272-3220.

Wan Laymon
Petitions Examiner
Office of Petitions

[1] The fee for a three (3) month extensions of time was $510.00 and petitioners paid a total of $285.00 as of March 4, 2005.

UNITED STATES PATENT AND TRADEMARK OFFICE

Commissioner for Patents
United States Patent and Trademark Office
P.O. Box 1450
Alexandria, VA 22313-1450
www.uspto.gov

SEP 14 2004

DARBY & DARBY P.C.
P. O. BOX 5257
NEW YORK NY 10150-5257

In re Application of	:
Connie Sanchez et al	:
Serial No.: 10/644,576	: PETITION TO MAKE SPECIAL
Filed: August 20, 2003	:
Attorney Docket No.: 05432/100M919	:

This is in response to applicants' petition filed August 5, 2004, to make the above-identified application special under the provisions of 37 CFR 1.102(d).

Applicant has satisfied the provisions set forth in M.P.E.P. 708.02, VIII. Therefor the petition is **GRANTED**.

The following condition applies to the grant of this petition: If, upon examination, it is determined that a restriction requirement is necessary because of multiple inventions being claimed, applicant will be required to make an election without traverse of a single invention to be prosecuted. Failure to make an election without traverse will void the special status accorded in this decision.

The application will be forwarded the examiner for action on the merits commensurate with this decision.

Should there be any questions with regard to this letter please contact William R. Dixon, Jr. by letter addressed to the Director, Technology Center 1600, P.O. Box 1450, Alexandria, VA 22313-1450, or by telephone at 571-272-0519 or by facsimile transmission at the general Office facsimile number, (703) 872-9306.

William R. Dixon, Jr.
Special Program Examiner
Technology Center 1600

UNITED STATES PATENT AND TRADEMARK OFFICE

Commissioner for Patents
United States Patent and Trademark Office
P.O. Box 1450
Alexandria, VA 22313-1450
www.uspto.gov

DARBY & DARBY P.C.
P. O. BOX 5257
NEW YORK NY 10150-5257

In re Application of	:
Connie Sanchez et al	:
Serial No.: 10/644,577	: PETITION TO MAKE SPECIAL
Filed: August 20, 2003	:
Attorney Docket No.: 05432/100M919	:

This is in response to applicants' petition filed August 4, 2004, to make the above-identified application special under the provisions of 37 CFR 1.102(d).

Applicant has satisfied the provisions set forth in M.P.E.P. 708.02, VIII. Therefor the petition is **GRANTED**.

The following condition applies to the grant of this petition: If, upon examination, it is determined that a restriction requirement is necessary because of multiple inventions being claimed, applicant will be required to make an election without traverse of a single invention to be prosecuted. Failure to make an election without traverse will void the special status accorded in this decision.

The application will be forwarded the examiner for action on the merits commensurate with this decision.

Should there be any questions with regard to this letter please contact William R. Dixon, Jr. by letter addressed to the Director, Technology Center 1600, P.O. Box 1450, Alexandria, VA 22313-1450, or by telephone at 571-272-0519 or by facsimile transmission at the general Office facsimile number, (703) 872-9306.

William R. Dixon, Jr.
Special Program Examiner
Technology Center 1600

UNITED STATES PATENT AND TRADEMARK OFFICE

Commissioner for Patents
United States Patent and Trademark Office
P.O. Box 1450
Alexandria, VA 22313-1450
www.uspto.gov

DARBY & DARBY P.C.
P. O. BOX 5257
NEW YORK NY 10150-5257

In re Application of	:
Connie Sanchez et al	:
Serial No.: 10/644,579	: PETITION TO MAKE SPECIAL
Filed: August 20, 2003	:
Attorney Docket No.: 05432/100M919	:

This is in response to applicants' petition filed July 8, 2004, to make the above-identified application special under the provisions of 37 CFR 1.102(d).

Applicant has satisfied the provisions set forth in M.P.E.P. 708.02, VIII. Therefor the petition is **GRANTED**.

The following condition applies to the grant of this petition: If, upon examination, it is determined that a restriction requirement is necessary because of multiple inventions being claimed, applicant will be required to make an election without traverse of a single invention to be prosecuted. Failure to make an election without traverse will void the special status accorded in this decision.

The application will be forwarded the examiner for action on the merits commensurate with this decision.

Should there be any questions with regard to this letter please contact William R. Dixon, Jr. by letter addressed to the Director, Technology Center 1600, P.O. Box 1450, Alexandria, VA 22313-1450, or by telephone at 571-272-0519 or by facsimile transmission at the general Office facsimile number, (703) 872-9306.

William R. Dixon, Jr.
Special Program Examiner
Technology Center 1600

UNITED STATES PATENT AND TRADEMARK OFFICE

Commissioner for Patents
United States Patent and Trademark Office
P.O. Box 1450
Alexandria, VA 22313-1450
www.uspto.gov

MAILED

MAR 18 2010

OFFICE OF PETITIONS

DARBY & DARBY P.C.
P.O. BOX 770
CHURCH STREET STATION
NEW YORK, NY 10008-0770

In re Application of :
Connie Sanchez, et al. :
Application No. 10/644,588 : ON PETITION
Filed: August 20, 2003 :
Attorney Docket No.: 05432/100M919-US3:

This is a decision on the petition, filed December 14, 2009, requesting withdrawal of the holding of abandonment in the above-identified application under the provisions of 37 CFR 1.181 (no fee).

The petition is **GRANTED**.

This application was held abandoned for failure to timely respond to the final Office action of May 29, 2009, which set a three (3) month shortened statutory period for reply. It is noted that a reply was due on or before August 29, 2009; however, the maximum statutory period for response ended on November 30, 2009, since November 29, 2009 was a Sunday. On December 3, 2009, a Notice of Abandonment was mailed.

Petitioner asserts that a timely response was filed on November 24, 2009, with an appropriate extension of time. To support this assertion, petitioner submitted a copy of the Certificate of Express Mailing Under 37 CFR 1.10 "identifying these timely filed documents..." Accordingly, petitioner requests that the abandonment be withdrawn.

A review of the written record confirms that a 3-month extension of time, Request for Continued Examination (RCE) and amendment under 37 CFR 1.114 were filed on November 24, 2009, as they are present in the file. Since the response was timely received in the USPTO on November 24, 2009, no abandonment existed.

In view of the above, the holding of abandonment is hereby withdrawn and the application restored to pending status. The Notice of Abandonment mailed December 39, 2009 is hereby vacated.

This application is being referred to Technology Center AU 1627 for appropriate action by the Examiner in the normal course of business on the reply received November 24, 2009.

Telephone inquiries concerning this decision should be directed to the undersigned at (571) 272-3204. Inquiries relating to further prosecution should be directed to the Technology Center.

Sherry D. Brinkley
Petitions Examiner
Office of Petitions

UNITED STATES PATENT AND TRADEMARK OFFICE

Commissioner for Patents
United States Patent and Trademark Office
P.O. Box 1450
Alexandria, VA 22313-1450
www.uspto.gov

KNOBBE MARTENS OLSON & BEAR LLP
2040 MAIN STREET
FOURTEENTH FLOOR
IRVINE, CA 92614

COPY MAILED

NOV 0 9 2004

OFFICE OF PETITIONS

In re Application of :
Richard D. Charnitski :
Application No. 10/644,591 :
Filed: August 19, 2003 :
Attorney Docket No. HEART.017C2 :

DECISION GRANTING PETITION

This is a decision on the petition filed September 13, 2004, under 37 CFR 1.10 requesting that the above-cited application be accorded a filing date of August 19, 2003, rather than the presently accorded filing date of August 18, 2003.

Petitioner alleges that the application was deposited with the Express Mail Service on August 19, 2003. In support of the allegation, the petition is accompanied by a copy of the Express Mail label with a tracking number EV319023094USUS showing a "date-in" of August 19, 2003. The tracking number cited is the same number found on the application transmittal sheet that accompanied the original application papers. The evidence is convincing that the application papers were deposited on August 19, 2003

In view of the above, the petition is granted. The new filing date for the above-cited application is August 19, 2003.

The Office of Initial Patent Examination will further process the application with a filing date of August 19, 2003, and issue a corrected filing receipt.

Any inquiries related to this decision should be directed to the undersigned at (571)272-3222.

Kenya A. McLaughlin
Petitions Attorney
Office of Petitions

UNITED STATES PATENT AND TRADEMARK OFFICE

Commissioner for Patents
United States Patent and Trademark Office
P.O. Box 1450
Alexandria, VA 22313-1450
www.uspto.gov

O'MELVENY & MYERS LLP
SUITE 100
114 PACIFICA
IRVINE, CA 92618-3315

COPY MAILED

FEB 15 2006

OFFICE OF PETITIONS

In re Application of :
Christian Miculka, et al. :
Application No. 10/644,592 : ON PETITION
Filed: August 19, 2003 :
Attorney Docket No. 612,406-035 :

This is a decision on the petition filed August 30, 2004, under 37 C.F.R. §1.78(a)(3), to accept an unintentionally delayed claim under 35 U.S.C. § 120 for the benefit of priority to prior-filed nonprovisional Application No. 09/509,058. This petition is also being treated as a petition under 37 CFR 1.55(c) requesting acceptance of an unintentionally delayed claim under 35 USC 119(a) through (d) for the benefit of prior-filed German Application No. 197 41 715.9, filed September 22, 1997.

The petition under 37 CFR 1.78(a)(3) is **GRANTED**.

The petition under 37 CFR 1.55(c) is **DISMISSED**.

A petition for acceptance of a claim for late priority under 37 CFR 1.78(a)(3) is only applicable to those applications filed on or after November 29, 2000. Further, the petition is appropriate only after the expiration of the period specified in 37 CFR 1.78(a)(2)(ii). In addition, the petition under 37 CFR 1.78(a)(3) must be accompanied by:

(1) the reference required by 35 U.S.C. § 120 and 37 CFR 1.78(a)(2)(i) of the prior-filed application, unless previously submitted;

(2) the surcharge set forth in § 1.17(t); and

(3) a statement that the entire delay between the date the claim was due under 37 CFR 1.78(a)(2)(ii) and the date the claim was filed was unintentional. The Commissioner may require additional information where there is a question whether the delay was unintentional.

The instant nonprovisional application was filed after November 29, 2000, and the claim herein for the benefit of priority to the prior-filed nonprovisional application is submitted after expiration of the period specified in 37 CFR 1.78(a)(2)(ii). Therefore, this is a proper petition under 37 CFR 1.78(a)(3).

The petition complies with the requirements for a grantable petition under 37 CFR 1.78(a)(3) in that (1) a reference to the above-noted, prior-filed nonprovisional application has been included in an amendment to the first sentence of the specification following the title, as provided by 37 CFR 1.78(a)(2)(iii); (2) the surcharge fee required by 37 CFR 1.17(t) has been submitted; and (3) the petition contains a proper

statement of unintentional delay. Accordingly, having found that the instant petition for acceptance of an unintentionally delayed claim for the benefit of priority under 35 U.S.C. § 120 to the above-noted, prior-filed nonprovisional application satisfies the conditions of 37 CFR 1.78(a)(3), the petition is granted.

The granting of the petition to accept the delayed benefit claim to the prior-filed application under 37 CFR 1.78(a)(3) should not be construed as meaning that this application is entitled to the benefit of the prior-filed application. In order for this application to be entitled to the benefit of the prior-filed application, all other requirements under 35 U.S.C. § 120 and 37 CFR 1.78(a)(1) and (a)(2) must be met. Similarly, the fact that the corrected Filing Receipt accompanying this decision on petition includes the prior-filed application should not be construed as meaning that applicant is entitled to the claim for benefit of priority to the prior-filed application noted thereon. Accordingly, the examiner will, in due course, consider this benefit claim and determine whether the application is entitled to the benefit of the earlier filing date.

As to the matter under 37 CFR 1.55(c):

A petition under 37 CFR 1.55(c) to accept an unintentionally delayed claim for priority requires:

(1) the nonprovisional application claiming the benefit of an earlier filing date must be filed on or after November 29, 2000;

(2) the claim submitted with the petition must identify the prior foreign application for which priority is claimed, as well as any foreign application for the same subject matter and having a filing date before that of the application for which priority is claimed, by the application number, country, and the filing date **and be included either in an oath or declaration (37 CFR 1.63(c)(2)) or in an Application Data Sheet (37 CFR 1.76(b)(6)**;

(3) the surcharge as set forth in 37 CFR 1.17(t);

(4) a statement that the entire delay between the date the claim was due under 37 CFR 1.55(a)(1) and the date the claim was filed was unintentional. (The Commissioner may require additional information where there is a question whether the delay was unintentional.); and

(5) the above-identified nonprovisional application must be filed within 12 months of the filing date of the foreign application.

The petition fails to comply with item (4) above.

Additionally, petitioner should be aware that the amendment submitted with the instant petition improperly placed the claim for benefit to foreign German Application No. 19741715.9, filed September 22, 1997, to be included with the domestic priority which is not in compliance with 37 CFR 1.63(c)(2). However, petitioner did include the reference to the foreign application in the declaration submitted with the petition on August 30, 2004.

In view of the above, a renewed petition under 37 CFR 1.55(c) is required if applicant desires to claim priority to German Application No. 19741715.9. Any future petition should include a cover letter and be entitled "Renewed Petition under 37 CFR 1.55(c)."

Further correspondence with respect to this matter should be addressed as follows:

By mail:	Mail Stop PETITIONS Commissioner for Patents Post Office Box 1450 Alexandria, VA 22313-1450
By hand:	Customer Service Window Mail Stop Petitions Randolph Building 401 Dulany Street Alexandria, VA 22314
By fax:	(571) 273-8300 ATTN: Office of Petitions

Any questions concerning this matter may be directed to Retta Williams at (571) 272-3229.

Karen Creasy

Karen Creasy
Petitions Examiner
Office of Petitions

UNITED STATES PATENT AND TRADEMARK OFFICE

Commissioner for Patents
United States Patent and Trademark Office
P.O. Box 1450
Alexandria, VA 22313-1450
www.uspto.gov

O'MELVENY & MYERS LLP
SUITE 100
114 PACIFICA
IRVINE CA 92618-3315

COPY MAILED

NOV 29 2006

OFFICE OF PETITIONS

In re Application of :
Christian Miculka et al :
Application No. 10/644,592 : DECISION ON PETITION
Filed: August 19, 2003 : UNDER 37 CFR 1.55(c)
Attorney Docket No. 612,406-035 :

This is a decision on the petition under 37 CFR 1.55(c), filed February 27, 2006, to accept an unintentionally delayed claim under 35 U.S.C. § 119(a)-(d) for the benefit of priority to foreign German Application No.19741715.9, filed September 22, 1997.

The petition is **GRANTED**.

This pending nonprovisional application was filed after November 29, 2000, and did not include a reference to the foreign application, for which benefit is now sought, within the later of four months from the actual filing date of the application or sixteen months from the filing date of the prior foreign application. Since the claim for priority is submitted after the period specified in 37 CFR 1.55(a)(1)(i), this is an appropriate petition under the provisions of 37 CFR 1.55(c).

A petition under 37 CFR 1.55(c) to accept an unintentionally delayed claim for priority requires:

(1) The nonprovisional application claiming the benefit of an earlier filing date must be filed on or after November 29, 2000;

(2) the claim submitted with the petition must identify the prior foreign application for which priority is claimed, as well as any foreign application for the same subject matter and having a filing date before that of the application for which priority is claimed, by the application number, country, and the filing date and be included either in an oath or declaration (37 CFR 1.63(c)(2)) or in an Application Data Sheet (37 CFR 1.76(b)(6);

(3) the surcharge as set forth in 37 CFR 1.17(t);

(4) a statement that the entire delay between the date the claim was due under 37 CFR 1.55(a)(1) and the date the claim was filed was unintentional (the Director may require additional information where there is a question whether the delay was unintentional); and

(5) the above-identified nonprovisional application must be filed within 12 months of the filing date of the foreign application.

This application was filed on August 19, 2003, which is after November 29, 2000. Intermediate International Application PCT/EP98/05997, was filed September 21, 1998 and within 12 months of (the filing date of the foreign application to which benefit is now being claimed). On June 14, 2004, an executed oath/declaration was received which identifies the foreign application for which priority is claimed by application number, country and filing date. The required petition fee of $1,330 was received with the petition. Lastly, petitioner has provided an adequate statement of unintentional delay.

All of the above requirements having been satisfied, the late claim for priority under 35 U.S.C. § 119(a)-(d) is accepted as being unintentionally delayed.

The granting of the petition to accept the delayed benefit claim to the prior-filed application under 37 CFR 1.55(c) should not be construed as meaning that this application is entitled to the benefit of the prior-filed application. In order for this application to be entitled to the benefit of the prior-filed application, all other requirements under 35 U.S.C. § 119(a)-(d) and 37 CFR 1.55(a)(1) must be met. Similarly, the fact that the corrected Filing Receipt accompanying this decision on petition includes the prior-filed application should not be construed as meaning that applicant is entitled to the claim for benefit of priority to the prior-filed application noted thereon. Accordingly, the examiner will, in due course, consider this benefit claim and determine whether this application is entitled to the benefit of the earlier filing date.

This application is being referred to Technology Center AU 1623.

A review of the Office record shows that the application is abandoned for failure to timely respond to the Non-Final Rejection mailed February 16, 2006.

Any inquiries directly pertaining to this matter may be directed to the undersigned at (571) 272-3208.

Karen Creasy
Petitions Examiner
Office of Petitions

UNITED STATES PATENT AND TRADEMARK OFFICE

Commissioner for Patents
United States Patent and Trademark Office
P.O. Box 1450
Alexandria, VA 22313-1450
www.uspto.gov

PATENT COUNSEL
APPLIED MATERIALS, INC.
LEGAL AFFAIRS DEPARTMENT
P.O. BOX 450A
SANTA CLARA, CA 95052

COPY MAILED

JAN 1 4 2005

OFFICE OF PETITIONS

In re Application of :
Anh H. Nguyen, et al. :
Application No. 10/644,598 : ON PETITION
Filed: August 20, 2003 :
Attorney Docket No. AMAT/7874/CPI/ALD/PJS :

This is a decision on the petition under 37 CFR 1.137(b), filed October 4, 2004, to revive the above-identified application.

The petition is **GRANTED.**

The above-identified application became abandoned for failure to reply in a timely manner to the Notice to File Missing Parts of Nonprovisional Application mailed September 17, 2003. The Notice set a period for reply of two (2) months from the mail date of the Notice. No extensions of time under the provisions of 37 CFR 1.136(a) were obtained. Accordingly, the above-identified application became abandoned on November 18, 2003.

Telephone inquiries concerning this decision should be directed to the undersigned at (571) 272-3229.

The application file is being forwarded to the Office of Initial Patent Examination for further processing.

Retta Williams

Retta Williams
Petitions Examiner
Office of Petitions
Office of the Deputy Commissioner
for Patent Examination Policy

UNITED STATES PATENT AND TRADEMARK OFFICE

Commissioner for Patents
United States Patent and Trademark Office
P.O. Box 1450
Alexandria, VA 22313-1450
www.uspto.gov

WILLIAM S. FROMMER ESQ.
C/O FROMMER LAWRENCE AND HAUG LLP
745 FIFTH AVENUE
NEW YORK, NY 10151

COPY MAILED

JUL 0 2 2004

OFFICE OF PETITIONS

In re Application of :
Angela C.W. Lai et al. :
Application No. 10/644,602 : DECISION ACCORDING STATUS
Filed: August 20, 2003 : UNDER 37 CFR 1.47(a)
Attorney Docket No: 2500803-900101 :

This is in response to the petition filed under 37 CFR 1.47 on June 1, 2004 and supplemented under 37 CFR 1.47(a) on June 10, 2004.

The petition is **GRANTED.**

The above-identified application was filed on August 20, 2003 naming Angela C.W. Lai, James Peter Hoddie, Howard E. Chartock, Christopher V. Pirazzi, Steve H. Chin and Jody Shapiro as joint inventors, but without a signed declaration.

Accordingly, on November 13, 2003, a "Notice To File Missing Parts of Application" was mailed, requiring *inter alia* a properly executed oath or declaration.

A grantable petition under 37 CFR 1.47(a) requires: (1) proof that the non-signing inventor cannot be reached or refuses to sign the oath or declaration after having been presented with the application papers (specification, claims and drawings); (2) an acceptable oath or declaration in compliance with 35 U.S.C. §§ 115 and 116; (3) the petition fee; and (4) a statement of the last known address of the non-signing inventor.

In response, on June 1, 2004, a petition under 37 CFR 1.47(b) was filed with a five month extension of time request and declarations signed only by joint inventors Lai, Chartock, Pirazzi, Chin and Shapiro and signed by Koichi Wada, Manager Intellectual Property Division for SONY, the assignee, claiming that joint inventor Hoddie refuses, by his actions to cooperate with the filing of the application.

Petitioners have shown that the application papers were sent to Mr. Hoddie and that Mr. Hoddie first acknowledged receipt of the application and that he was in the process of reviewing the application and subsequently, petitioners show that follow-up communications to Mr. Hoddie regarding the execution of the oath or declaration have gone unanswered.

Subsequent to the filing of the petition under 37 CFR 1.47(b) on June 1, 2004, petitioner re-filed the petition under 37 CFR 1.47(a) Regarding the treatment of a petitioner under 37 CFR 1.147(b), if none of the named inventor(s) will sign the oath or declaration, a petition under 37 CFR 1.47(b) must be filed. If some of the named inventors signed the oath or declaration and one or more of the named inventors have not signed the declaration, a petition under 37 CFR 1.47(a) must be filed. In the instant case, five of the six inventors had signed the oath or declaration, there was no reason to have Mr. Wada sign on behalf of Mr. Hoddie and thus the petition under 37 CFR 1.47(b) was improvidently filed.

Six separate documents each with a signature of each of the five signing inventors has been submitted, and on each of them, the signature block for Mr. Hoddie has been left blank. In favor of the supplemental petition filed June 10, 2004 under 37 CFR 1.47(a), we will disregard the first page of the oath or declaration signed by the assignee.

The above-identified application and papers have been reviewed and found in compliance with 37 CFR 1.47(a). This application is hereby accorded Rule 1.47(a) status.

As provided in Rule 1.47(c), this Office will forward notice of this application's filing to the non-signing inventor at the address given in the declaration. Notice of the filing of this application will also be published in the Official Gazette.

The application is being forwarded to Technology Center 2171 for examination in due course.

Telephone inquiries concerning this matter may be directed to the undersigned Petitions Attorney at (703)305-4497.

Patricia Faison-Ball

Patricia Faison-Ball
Senior Petitions Attorney
Office of Petitions

UNITED STATES PATENT AND TRADEMARK OFFICE

Commissioner for Patents
United States Patent and Trademark Office
P.O. Box 1450
Alexandria, VA 22313-1450
www.uspto.gov

JAMES PETER HODDIE
579 NINTH AVENUE
MENLO PARK, CA 94025

COPY MAILED

JUL 0 2 2004

OFFICE OF PETITIONS

In re Application of
Angela C.W. Lai et al.
Application No. 10/644,602
Filed: August 20, 2003
For: DISTRIBUTED ON-DEMAND MEDIA TRANSCODING SYSTEM AND METHOD

Dear Mr. Hoddie:

You are named as a joint inventor in the above identified United States patent application, filed under the provisions of 35 U.S.C. 116 (United States Code), and 37 CFR 1.47(a), Rules of Practice in Patent Cases. Should a patent be granted on the application you will be designated therein as a joint inventor.

As a named inventor you are entitled to inspect any paper in the file wrapper of the application, order copies of all or any part thereof (at a prepaid cost per 37 CFR 1.19) or make your position of record in the application. Alternatively, you may arrange to do any of the preceding through a registered patent attorney or agent presenting written authorization from you. If you care to join the application, counsel of record (see below) would presumably assist you. Joining in the application would entail the filing of an appropriate oath or declaration by you pursuant to 37 CFR 1.63.

Telephone inquiries regarding this communication should be directed to the undersigned Petitions Attorney at (703) 305-4497. Requests for information regarding your application should be directed to the File Information Unit at 703/308-2733. Information regarding how to pay for and order a copy of the application, or a specific paper in the application, should be directed to Certification Division at 703/308-9726 or 1-800-972-6382 (outside the Washington D.C. area).

Patricia Faison-Ball
Senior Petitions Attorney
Office of Petitions

cc:
WILLIAM S. FROMMER ESQ.
C/O FROMMER LAWRENCE AND HAUG LLP
745 FIFTH AVENUE
NEW YORK NY 10151

UNITED STATES PATENT AND TRADEMARK OFFICE

Commissioner for Patents
United States Patent and Trademark Office
P.O. Box 1450
Alexandria, VA 22313-1450
www.uspto.gov

Law Offices of Kenneth W. Float
2095 Hwy. 211 NW, # 2F
Braselton, GA 30517

COPY MAILED

JUN 21 2006

OFFICE OF PETITIONS

In re Application of Contestable :
Application No. 10/644,606 : Decision on Petition
Filing Date: August 20, 2003 :
Attorney Docket No. Y03-020 :

This is a decision on the petition under 37 CFR 1.137(a), filed February 14, 2006, to revive the above-identified application.

The petition is **DISMISSED**.

Any request for reconsideration must be submitted within TWO (2) MONTHS from the mail date of this decision. Extensions of time under 37 CFR 1.136(a) are permitted. The reconsideration request should include a cover letter entitled "Renewed Petition under 37 CFR 1.137(a)." This is **not** final agency action within the meaning of 5 U.S.C. § 704.

Facts:

A final Office action was mailed July 13, 2005. The Office action set a shortened statutory period for reply of three (3) months.

A reply was filed September 16, 2005.

The reply failed to place the application in condition for allowance.

The application became abandoned on October 14, 2005.

The last day a reply could have been filed, with an extension of time, was January 13, 2006.

An Advisory action was not mailed until after January 13, 2006.

A Notice of Abandonment was mailed on January 24, 2006.

Discussion:

The petition fails to establish to the satisfaction of the Commissioner that the entire delay in filing the required reply from the due date for the reply until the filing of a grantable petition pursuant to this paragraph was unavoidable.

"[T]he question of whether an applicant's delay in prosecuting an application was unavoidable must be decided on a case-by-case basis, taking all of the facts and circumstances into account."[1] The general question asked by the Office is: "Did petitioner act as a reasonable and prudent person in relation to his most important business?"[2]

Petitioner alleges the delay was unavoidable based on the advisory action being mailed beyond the maximum extendable time period for reply. However, a delay is not rendered "unavoidable" due to the Office's failure to advise the applicant of any deficiency in sufficient time to permit the applicant to take corrective action.[3]

Petitioner's belief that the amendment placed the application in condition for allowance was not a guarantee the amendment would be entered by the examiner. The entry of an after-final amendment is not a matter of right. A response to a final rejection may be entered if it presents an amendment that prima facie places the application in condition for allowance.

When the last day to file a reply arrived, petitioner chose to continue to wait for a response from the examiner and risk abandonment. However, petitioner could have chosen to eliminate the risk of abandonment by filing a Notice of Appeal or Request for Continued Examination (RCE). An individual, treating the application the same as a reasonable and prudent person would treat his or her most important business, would have taken steps to ensure the application did not become abandoned rather than simply assume the amendment would be entered.

Petitioner may wish to consider filing a petition to revive based on unintentional abandonment under 37 CFR 1.137(b). A grantable petition pursuant to 37 CFR 1.137(b) must be accompanied by the required reply (already submitted), the required petition fee ($750 for a small entity), and a statement that the **entire** delay in filing the required reply from the due date for the reply until the filing of a grantable petition pursuant to 37 CFR 1.137(b) was unintentional. A copy of a blank petition form is enclosed for petitioner's convenience.

Further correspondence with respect to this matter should be addressed as follows:

By mail: Mail Stop Petition
Commissioner for Patents
P.O. Box 1450
Alexandria, VA 22313-1450

By facsimile: (571) 273-8300
Attn: Office of Petitions

---

[1] Smith v. Mossinghoff, 671 F.2d 533, 538, 213 U.S.P.Q. (BNA) 977 (1982).

[2] See In re Mattullath, 38 App. D.C. 497 (D.C. Cir. 1912).

[3] See In re Sivertz, 227 USPQ 255, 256 (Comm'r Pat. 1985); see also In re Colombo, Inc., 33 USPQ2d 1530, 1532 (Comm'r Pat. 1994) (while the Office attempts to notify applicants of deficiencies in their responses in a manner permitting a timely correction, the Office has no obligation to notify parties of deficiencies in their responses in a manner permitting a timely correction).

Telephone inquiries regarding this communication should be directed to Petitions Attorney Steven Brantley at (571) 272-3203.

Charles Steven Brantley
Senior Petitions Attorney
Office of Petitions

Enclosure: Form PTO/SB/64

PTO/SB/64 (10-05)
Approved for use through 07/31/2006. OMB 0651-0031
U.S. Patent and Trademark Office; U.S. DEPARTMENT OF COMMERCE
Under the Paperwork Reduction Act of 1995, no persons are required to respond to a collection of information unless it displays a valid OMB control number.

PETITION FOR REVIVAL OF AN APPLICATION FOR PATENT ABANDONED UNINTENTIONALLY UNDER 37 CFR 1.137(b)	Docket Number (Optional)

First named inventor:

Application No.: Art Unit:

Filed: Examiner:

Title:

Attention: Office of Petitions
Mail Stop Petition
Commissioner for Patents
P.O. Box 1450
Alexandria, VA 22313-1450
FAX (571) 273-8300

NOTE: If information or assistance is needed in completing this form, please contact Petitions Information at (571) 272-3282.

The above-identified application became abandoned for failure to file a timely and proper reply to a notice or action by the United States Patent and Trademark Office. The date of abandonment is the day after the expiration date of the period set for reply in the office notice or action plus an extensions of time actually obtained.

APPLICANT HEREBY PETITIONS FOR REVIVAL OF THIS APPLICATION

NOTE: A grantable petition requires the following items:
(1) Petition fee;
(2) Reply and/or issue fee;
(3) Terminal disclaimer with disclaimer fee - required for all utility and plant applications filed before June 8, 1995; and for all design applications; and
(4) Statement that the entire delay was unintentional.

1. Petition fee

☐ Small entity-fee $ _____ (37 CFR 1.17(m)). Applicant claims small entity status. See 37 CFR 1.27.

☐ Other than small entity – fee $ _____ (37 CFR 1.17(m))

2. Reply and/or fee

A. The reply and/or fee to the above-noted Office action in the form of _____(identify type of reply):

☐ has been filed previously on _____.
☐ is enclosed herewith.

B. The issue fee and publication fee (if applicable) of $ _____.

☐ has been paid previously on _____.
☐ is enclosed herewith.

This collection of information is required by 37 CFR 1.137(b). The information is required to obtain or retain a benefit by the public which is to file (and by the USPTO to process) an application. Confidentiality is governed by 35 U.S.C. 122 and 37 CFR 1.11 and 1.14. This collection is estimated to take 1.0 hour to complete, including gathering, preparing, and submitting the completed application form to the USPTO. Time will vary depending upon the individual case. Any comments on the amount of time you require to complete this form and/or suggestions for reducing this burden, should be sent to the Chief Information Officer, U.S. Patent and Trademark Office, U.S. Department of Commerce, P.O. Box 1450, Alexandria, VA 22313-1450. DO NOT SEND FEES OR COMPLETED FORMS TO THIS ADDRESS. **SEND TO: Mail Stop Petition, Commissioner for Patents, P.O. Box 1450, Alexandria, VA 22313-1450.**

If you need assistance in completing the form, call 1-800-PTO-9199 and select option 2.

3. Terminal disclaimer with disclaimer fee

☐ Since this utility/plant application was filed on or after June 8, 1995, no terminal disclaimer is required.

☐ A terminal disclaimer (and disclaimer fee (37 CFR 1.20(d)) of $ _____ for a small entity or $ _____ for other than a small entity) disclaiming the required period of time is enclosed herewith (see PTO/SB/63).

4. STATEMENT: The entire delay in filing the required reply from the due date for the required reply until the filing of a grantable petition under 37 CFR 1.137(b) was unintentional. [NOTE: The United States Patent and Trademark Office may require additional information if there is a question as to whether either the abandonment or the delay in filing a petition under 37 CFR 1.137(b) was unintentional (MPEP 711.03(c), subsections (III)(C) and (D)).]

WARNING:

Petitioner/applicant is cautioned to avoid submitting personal information in documents filed in a patent application that may contribute to identity theft. Personal information such as social security numbers, bank account numbers, or credit card numbers (other than a check or credit card authorization form PTO-2038 submitted for payment purposes) is never required by the USPTO to support a petition or an application. If this type of personal information is included in documents submitted to the USPTO, petitioners/applicants should consider redacting such personal information from the documents before submitting them to the USPTO. Petitioner/applicant is advised that the record of a patent application is available to the public after publication of the application (unless a non-publication request in compliance with 37 CFR 1.213(a) is made in the application) or issuance of a patent. Furthermore, the record from an abandoned application may also be available to the public if the application is referenced in a published application or an issued patent (see 37 CFR 1.14). Checks and credit card authorization forms PTO-2038 submitted for payment purposes are not retained in the application file and therefore are not publicly available.

_____ _____
Signature Date

_____ _____
Typed or printed name Registration Number, if applicable

_____ _____
Address Telephone Number

_____
Address

Enclosures: ☐ Fee Payment
☐ Reply
☐ Terminal Disclaimer Form
☐ Additional sheets containing statements establishing unintentional delay
☐ Other: _____

CERTIFICATE OF MAILING OR TRANSMISSION [37 CFR 1.8(a)]

I hereby certify that this correspondence is being:

☐ Deposited with the United States Postal Service on the date shown below with sufficient postage as first class mail in an envelope addressed to: Mail Stop Petition, Commissioner for Patents, P. O. Box 1450, Alexandria, VA 22313-1450.

☐ Transmitted by facsimile on the date shown below to the United States Patent and Trademark Office as (571) 273-8300.

_____ _____
Date Signature

_____
Typed or printed name of person signing certificate

Privacy Act Statement

The **Privacy Act of 1974 (P.L. 93-579)** requires that you be given certain information in connection with your submission of the attached form related to a patent application or patent. Accordingly, pursuant to the requirements of the Act, please be advised that: (1) the general authority for the collection of this information is 35 U.S.C. 2(b)(2); (2) furnishing of the information solicited is voluntary; and (3) the principal purpose for which the information is used by the U.S. Patent and Trademark Office is to process and/or examine your submission related to a patent application or patent. If you do not furnish the requested information, the U.S. Patent and Trademark Office may not be able to process and/or examine your submission, which may result in termination of proceedings or abandonment of the application or expiration of the patent.

The information provided by you in this form will be subject to the following routine uses:

1. The information on this form will be treated confidentially to the extent allowed under the Freedom of Information Act (5 U.S.C. 552) and the Privacy Act (5 U.S.C 552a). Records from this system of records may be disclosed to the Department of Justice to determine whether disclosure of these records is required by the Freedom of Information Act.
2. A record from this system of records may be disclosed, as a routine use, in the course of presenting evidence to a court, magistrate, or administrative tribunal, including disclosures to opposing counsel in the course of settlement negotiations.
3. A record in this system of records may be disclosed, as a routine use, to a Member of Congress submitting a request involving an individual, to whom the record pertains, when the individual has requested assistance from the Member with respect to the subject matter of the record.
4. A record in this system of records may be disclosed, as a routine use, to a contractor of the Agency having need for the information in order to perform a contract. Recipients of information shall be required to comply with the requirements of the Privacy Act of 1974, as amended, pursuant to 5 U.S.C. 552a(m).
5. A record related to an International Application filed under the Patent Cooperation Treaty in this system of records may be disclosed, as a routine use, to the International Bureau of the World Intellectual Property Organization, pursuant to the Patent Cooperation Treaty.
6. A record in this system of records may be disclosed, as a routine use, to another federal agency for purposes of National Security review (35 U.S.C. 181) and for review pursuant to the Atomic Energy Act (42 U.S.C. 218(c)).
7. A record from this system of records may be disclosed, as a routine use, to the Administrator, General Services, or his/her designee, during an inspection of records conducted by GSA as part of that agency's responsibility to recommend improvements in records management practices and programs, under authority of 44 U.S.C. 2904 and 2906. Such disclosure shall be made in accordance with the GSA regulations governing inspection of records for this purpose, and any other relevant (*i.e.*, GSA or Commerce) directive. Such disclosure shall not be used to make determinations about individuals.
8. A record from this system of records may be disclosed, as a routine use, to the public after either publication of the application pursuant to 35 U.S.C. 122(b) or issuance of a patent pursuant to 35 U.S.C. 151. Further, a record may be disclosed, subject to the limitations of 37 CFR 1.14, as a routine use, to the public if the record was filed in an application which became abandoned or in which the proceedings were terminated and which application is referenced by either a published application, an application open to public inspection or an issued patent.
9. A record from this system of records may be disclosed, as a routine use, to a Federal, State, or local law enforcement agency, if the USPTO becomes aware of a violation or potential violation of law or regulation.

UNITED STATES PATENT AND TRADEMARK OFFICE

Commissioner for Patents
United States Patent and Trademark Office
P.O. Box 1450
Alexandria, VA 22313-1450
www.uspto.gov

Law Offices of Kenneth W. Float
2095 Hwy. 211 NW, # 2F
Braselton, GA 30517

COPY MAILED

JUL 26 2006

OFFICE OF PETITIONS

In re Application of Contestable :
Application No. 10/644,606 : Decision on Petition
Filing Date: August 20, 2003 :
Attorney Docket No. Y03-020 :

This is a decision on the petition under 37 CFR 1.137(b), filed June 27, 2006, to revive the above-identified application.

The petition is **granted**.

Facts:

A final Office action was mailed July 13, 2005. The Office action set a shortened statutory period for reply of three (3) months.

A reply was filed September 16, 2005.

The reply failed to place the application in condition for allowance.

The application became abandoned on October 14, 2005.

The last day a reply could have been filed, with an extension of time, was January 13, 2006.

An Advisory action was not mailed until after January 13, 2006.

A Notice of Abandonment was mailed on January 24, 2006.

Discussion:

The instant petition requests revival of the application.

Petitioner has met the requirements to revive the above-identified application pursuant to 37 CFR 1.137(b). Therefore, the petition is granted and the application is revived.

Technology Center Art Unit 2632 will be informed of the instant decision and the amendment filed February 14, 2006, will be entered and examined in due course.

Telephone inquiries regarding this communication should be directed to Petitions Attorney Steven Brantley at (571) 272-3203.

Charles Steven Brantley
Senior Petitions Attorney
Office of Petitions

UNITED STATES PATENT AND TRADEMARK OFFICE

Commissioner for Patents
United States Patent and Trademark Office
P.O. Box 1450
Alexandria, VA 22313-1450
www.uspto.gov

DONALD R. SCHOONOVER
4211 ROLLING HILLS DRIVE
NIXA, MO 65714-8771

COPY MAILED

SEP 0 1 2004

OFFICE OF PETITIONS

In re Application of :
Long et al. :
Application No. 10/644,636 : ON PETITION
Filed: August 21, 2003 :
Attorney Docket No. 1823870 :

This is a decision on the petition under 37 CFR 1.182, filed June 28, 2004, requesting issuance of a duplicate Letters Patent for the above-identified application.

The petition is **GRANTED**.

The Publishing Division is directed to issue a duplicate Letters Patent.

Any questions concerning this matter may be directed to Paralegal Liana Chase at (703) 306-0482 or at (571) 272-3206 after September 28, 2004. Any questions concerning issuance of the duplicate Letters Patent should be directed to Krystal Paige at (703) 305-8237.

A copy of this decision is being forwarded to Publishing Division for issuance of a duplicate Letters Patent.

Frances Hicks
Petitions Examiner
Office of Petitions
Office of the Deputy Commissioner
for Patent Examination Policy

cc: Krystal Paige, P/OPPD, Crystal Park 3-910 (FAX 305-4372)

UNITED STATES PATENT AND TRADEMARK OFFICE

Commissioner for Patents
United States Patent and Trademark Office
P.O. Box 1450
Alexandria, VA 22313-1450
www.uspto.gov
OIW 04-05

SCULLY SCOTT MURPHY & PRESSER, PC
400 GARDEN CITY PLAZA
SUITE 300
GARDEN CITY NY 11530

COPY MAILED

APR 12 2005

OFFICE OF PETITIONS

In re Application of :
Demarest et al. :
Application No. 10/644,665 : ON PETITION
Filed: 20 August, 2003 :
Att'y Docket No. DIAZ117 :

This is a decision on the petition under 1.137(b),[1] filed on 6 December, 2004, to revive the above-identified application.

The petition is **GRANTED**.

This application became abandoned on 20 May, 2004, for failure to timely reply to the non-final Office action mailed on 19 February, 2004, which set a three (3) month shortened statutory period for reply. No extensions of the time for reply in

---

[1]Effective December 1, 1997, the provisions of 37 CFR 1.137(b) now provide that where the delay in reply was unintentional, a petition may be filed to revive an abandoned application or a lapsed patent pursuant to 37 CFR 1.137(b). A grantable petition filed under the provisions of 37 CFR 1.137(b) must be accompanied by:

(1) the required reply, unless previously filed. In a nonprovisional application abandoned for failure to prosecute, the required reply may be met by the filing of a continuing application. In a nonprovisional application filed on or after June 8, 1995, and abandoned for failure to prosecute, the required reply may also be met by the filing of a request for continued examination in compliance with § 1.114. In an application or patent, abandoned or lapsed for failure to pay the issue fee or any portion thereof, the required reply must be the payment of the issue fee or any outstanding balance thereof. In an application abandoned for failure to pay the publication fee, the required reply must include payment of the publication fee.

(2) the petition fee as set forth in 37 CFR 1.17(m);

(3) a statement that the entire delay in filing the required reply from the due date for the reply until the filing of a grantable petition pursuant to 37 CFR 1.137(b) was unintentional. The Commissioner may required additional information where there is a question whether the delay was unintentional; and

(4) any terminal disclaimer (and fee as set forth in 37 CFR 1.20(d)) required pursuant to 37 CFR 1.137(c)).

accordance with 37 CFR 1.136(a) were obtained. Notice of Abandonment was mailed on 16 September, 2004.

Petitioner has submitted an amendment as the required reply.

Receipt of the change of correspondence address and terminal disclaimer filed with the present petition is acknowledged.

The application is being referred to Technology Center Art Unit 3651 for further processing.

Telephone inquiries concerning this matter may be directed to the undersigned at (571)272-3231.

D Wood

Douglas I. Wood
Senior Petitions Attorney
Office of Petitions

UNITED STATES PATENT AND TRADEMARK OFFICE

UNITED STATES DEPARTMENT OF COMMERCE
United States Patent and Trademark Office
Address: COMMISSIONER FOR PATENTS
P.O. Box 1450
Alexandria, Virginia 22313-1450
www.uspto.gov

IBM CORPORATION
IPLAW SHCB/40-3
1701 NORTH STREET
ENDICOTT, NY 13760

Mail Date: 04/20/2010

Applicant	: Kimberly J. Hughes	: DECISION ON REQUEST FOR
Patent Number	: 7596504	: RECALCULATION of PATENT
Issue Date	: 09/29/2009	: TERM ADJUSTMENT IN VIEW
Appliction No	: 10/644,677	: OF WYETH AND NOTICE OF INTENT TO
Filed	: 08/20/2003	: ISSUE CERTIFICATE OF CORRECTION
		:

The Request for Recalculation is **GRANTED** to the extent indicated.

The patent term adjustment has been determined to be **1786** days. The USPTO will *sua sponte* issue a certificate of correction reflecting the amount of PTA days determined by the recalculation.

Prior to the issuance of the certificate of correction, the USPTO will afford patentee an opportunity to be heard and request reconsideration. Accordingly, patentee has **one month or thirty (30) days**, whichever is longer, to file a request for reconsideration of this patent term adjustment calculation. See 35 U.S.C. 154(b)(3)(B)(ii) and 37 CFR 1.322(a)(4). No extensions of time will be granted under 37 CFR 1.136.

Patentee should use document code PET.OP if electronically filing a request for reconsideration of this patent term adjustment calculation. The patentee must also include the information required by 37 CFR 1.705(b)(2) and the fee required by 37 CFR 1.18(e). If patentee does not file a timely request for reconsideration of this patent term adjustment calculation including the information required by 37 CFR 1.705(b)(2) and the fee required by 37 CFR 1.18(e), the USPTO will issue a certificate of correction reflecting the PTA determination noted above.

Patentee should be aware that in order to preserve the right to review in the United States District Court for the District of Columbia of the USPTO patent term adjustment determination, patentee must ensure that he or she also take the steps required under 35 U.S.C. 154(b)(4)(A) in a timely manner. Nothing in the request for recalculation should be construed as providing an alternative time frame for commencing a civil action under 35 U.S.C. 154(b)(4)(A).

Any questions concerning this decision should be directed to the Office of Patent Legal Administration at 571-272-7702.

UNITED STATES PATENT AND TRADEMARK OFFICE

UNITED STATES DEPARTMENT OF COMMERCE
United States Patent and Trademark Office
Address: COMMISSIONER FOR PATENTS
P.O. Box 1450
Alexandria, Virginia 22313-1450
www.uspto.gov

HARNESS, DICKEY & PIERCE, P.L.C.
P.O. BOX 828
BLOOMFIELD HILLS, MI 48303

Mail Date: 04/21/2010

Applicant	: Kevin J. Frank	: DECISION ON REQUEST FOR
Patent Number	: 7570791	: RECALCULATION of PATENT
Issue Date	: 08/04/2009	: TERM ADJUSTMENT IN VIEW
Appliction No	: 10/644,680	: OF WYETH AND NOTICE OF INTENT TO
Filed	: 08/20/2003	: ISSUE CERTIFICATE OF CORRECTION
		:

The Request for Recalculation is **GRANTED** to the extent indicated.

The patent term adjustment has been determined to be **1646** days. The USPTO will *sua sponte* issue a certificate of correction reflecting the amount of PTA days determined by the recalculation.

Prior to the issuance of the certificate of correction, the USPTO will afford patentee an opportunity to be heard and request reconsideration. Accordingly, patentee has **one month or thirty (30) days**, whichever is longer, to file a request for reconsideration of this patent term adjustment calculation. See 35 U.S.C. 154(b)(3)(B)(ii) and 37 CFR 1.322(a)(4). No extensions of time will be granted under 37 CFR 1.136.

Patentee should use document code PET.OP if electronically filing a request for reconsideration of this patent term adjustment calculation. The patentee must also include the information required by 37 CFR 1.705(b)(2) and the fee required by 37 CFR 1.18(e). If patentee does not file a timely request for reconsideration of this patent term adjustment calculation including the information required by 37 CFR 1.705(b)(2) and the fee required by 37 CFR 1.18(e), the USPTO will issue a certificate of correction reflecting the PTA determination noted above.

Patentee should be aware that in order to preserve the right to review in the United States District Court for the District of Columbia of the USPTO patent term adjustment determination, patentee must ensure that he or she also take the steps required under 35 U.S.C. 154(b)(4)(A) in a timely manner. Nothing in the request for recalculation should be construed as providing an alternative time frame for commencing a civil action under 35 U.S.C. 154(b)(4)(A).

Any questions concerning this decision should be directed to the Office of Patent Legal Administration at 571-272-7702.

UNITED STATES PATENT AND TRADEMARK OFFICE

COMMISSIONER FOR PATENTS
UNITED STATES PATENT AND TRADEMARK OFFICE
P.O. BOX 1450
ALEXANDRIA, VA 22313-1450
WWW.USPTO.GOV

Paper No. None

DARBY & DARBY P.C.
P.O. BOX 5257
NEW YORK NY 10150-5257

COPY MAILED

AUG 15 2006

OFFICE OF PETITIONS

In re Application of :
Paul Szabo et al. :
Application No. 10/644,692 :
Filing Date: August 20, 2003 :
Attorney Docket No.: :
50002.0035US11 :
Title: METHOD AND SYSTEM FOR :
SCALING NETWORK TRAFFIC :
MANAGERS :

DECISION ON PETITIONS
UNDER 37 C.F.R. §§1.78(A)(3)
AND 1.78(A)(6)

This is a decision on the petitions under 37 C.F.R §§ 1.78(a)(3) and 1.78(a)(6), concurrently filed April 18, 2006, to accept an unintentionally delayed claim under 35 U.S.C. §§120 and 119(e) for the benefit of priority to the prior-filed applications set forth in the concurrently filed amendment and Application Data Sheet (ADS).

The petition is **GRANTED**.

A petition for acceptance of a claim for late priority under 37 C.F.R. §§ 1.78(a)(3) and 1.78(a)(6) is only applicable to those applications filed on or after November 29, 2000. Further, the petition is appropriate only after the expiration of the period specified in 37 C.F.R. §§ 1.78(a)(2)(ii) and 1.78(a)(5)(ii). In addition, the petition under 37 C.F.R. §§ 1.78(a)(3) and 1.78(a)(6) must be accompanied by:

(1) the reference required by 35 U.S.C. §§ 120 and 119(e) and 37 C.F.R. §§ 1.78(a)(2)(i) and 1.78(a)(5)(i) of the prior-filed application, unless previously submitted;
(2) the surcharge set forth in § 1.17(t); and

(3) a statement that the entire delay between the date the claim was due under 37 C.F.R. §§ 1.78(a)(2)(ii) and 1.78(a)(5)(ii) and the date the claim was filed was unintentional. The Director may require additional information where there is a question whether the delay was unintentional.

Additionally, the instant nonprovisional application must be pending at the time of filing of the reference to the prior-filed provisional application(s) as required by 37 C.F.R. 1.78(a)(5)(ii). Further, the nonprovisional application(s) claiming the benefit of the prior-filed provisional application(s) must have been filed within twelve months of the filing date of the prior-filed provisional application(s).

All of the above requirements having been satisfied, the late claim for benefit of priority to the prior-filed applications under 35 U.S.C. §§ 120 and 119(e) is accepted as being unintentionally delayed.

37 C.F.R §§ 1.78(a)(3) and 1.78(a)(6) require a statement that the entire delay between the date the claim was due under 37 C.F.R §§ 1.78(a)(2)(ii) and 1.78(a)(5)(ii) and the date the claim was filed was unintentional. Since the statement appearing in the petition varies from the required language, the statement is being construed as the statement required by 37 CFR §§1.78(a)(3) and 1.78(a)(6). If this is not a correct reading of the statement appearing in the petition, petitioner should promptly notify the Office.

The granting of the petition to accept the delayed benefit claim to the prior-filed applications under 37 C.F.R. §§ 1.78(a)(3) and 1.78(a)(6) should not be construed as meaning that this application is entitled to the benefit of the filing date of the prior-filed applications. In order for this application to be entitled to the benefit of the prior-filed applications, all other requirements under 35 U.S.C. §§120 and 1.78(a)(1) and (a)(2) and under 35 U.S.C. §119(e) and 37 C.F.R. 1.78(a)(4) and (a)(5) must be met. Similarly, the fact that the corrected Filing Receipt accompanying this decision on petition includes the prior-filed applications should not be construed as meaning that applicant is entitled to the claim for benefit of priority to the prior-filed applications noted thereon. Accordingly, the examiner will, in due course, consider this benefit claim and determine whether the application is entitled to the benefit of the earlier filing date.

A corrected Filing Receipt, which includes the priority claim to the prior-filed non-provisional application, accompanies this decision on petition.

Technology Center Art Unit 2157 will be notified of this decision, so that appropriate action can be taken on the amendment filed with this petition, including consideration by the examiner of applicant's entitlement to claim benefit of priority under 35 U.S.C. §120 to the prior-filed non-provisional application.

The general phone number for the Office of Petitions which should be used for status requests is (571) 272-3282. Telephone inquiries regarding this decision should be directed to Senior Attorney Paul Shanoski at (571) 272-3225.

Frances Hicks
Petitions Examiner
Office of Petitions
United States Patent and Trademark Office

ATTACHMENT: Corrected Filing Receipt

UNITED STATES PATENT AND TRADEMARK OFFICE

UNITED STATES DEPARTMENT OF COMMERCE
United States Patent and Trademark Office
Address: COMMISSIONER FOR PATENTS
P.O. Box 1450
Alexandria, Virginia 22313-1450
www.uspto.gov

APPL NO.	FILING OR 371 (c) DATE	ART UNIT	FIL FEE REC'D	ATTY.DOCKET NO	DRAWINGS	TOT CLMS	IND CLMS
10/644,692	08/20/2003	2157	1236	50002.0035USI1	9	33	6

CONFIRMATION NO. 6716

38878
DARBY & DARBY P.C.
P.O. BOX 5257
NEW YORK, NY 10150-5257

CORRECTED FILING RECEIPT

OC000000019146027

Date Mailed: 06/07/2006

Receipt is acknowledged of this regular Patent Application. It will be considered in its order and you will be notified as to the results of the examination. Be sure to provide the U.S. APPLICATION NUMBER, FILING DATE, NAME OF APPLICANT, and TITLE OF INVENTION when inquiring about this application. Fees transmitted by check or draft are subject to collection. Please verify the accuracy of the data presented on this receipt. **If an error is noted on this Filing Receipt, please mail to the Commissioner for Patents P.O. Box 1450 Alexandria Va 22313-1450. Please provide a copy of this Filing Receipt with the changes noted thereon. If you received a "Notice to File Missing Parts" for this application, please submit any corrections to this Filing Receipt with your reply to the Notice. When the USPTO processes the reply to the Notice, the USPTO will generate another Filing Receipt incorporating the requested corrections (if appropriate).**

Applicant(s)

Paul Szabo, Seattle, WA;
David D. Schmitt, Seattle, WA;
Ning X. Li, Sequim, WA;

Assignment For Published Patent Application

F5 Networks, Inc., Seattle, WA

Power of Attorney: The patent practitioners associated with Customer Number **38878**.

Domestic Priority data as claimed by applicant

This application is a CIP of 10/119,433 04/09/2002
which claims benefit of 60/293,466 05/24/2001

Foreign Applications

If Required, Foreign Filing License Granted: 11/13/2003

The country code and number of your priority application, to be used for filing abroad under the Paris Convention, is US10/644,692

Projected Publication Date: Request for Non-Publication Acknowledged

Non-Publication Request: Yes

Early Publication Request: No

Title

Method and system for scaling network traffic managers

Preliminary Class

709

PROTECTING YOUR INVENTION OUTSIDE THE UNITED STATES

Since the rights granted by a U.S. patent extend only throughout the territory of the United States and have no effect in a foreign country, an inventor who wishes patent protection in another country must apply for a patent in a specific country or in regional patent offices. Applicants may wish to consider the filing of an international application under the Patent Cooperation Treaty (PCT). An international (PCT) application generally has the same effect as a regular national patent application in each PCT-member country. The PCT process **simplifies** the filing of patent applications on the same invention in member countries, but **does not result** in a grant of "an international patent" and does not eliminate the need of applicants to file additional documents and fees in countries where patent protection is desired.

Almost every country has its own patent law, and a person desiring a patent in a particular country must make an application for patent in that country in accordance with its particular laws. Since the laws of many countries differ in various respects from the patent law of the United States, applicants are advised to seek guidance from specific foreign countries to ensure that patent rights are not lost prematurely.

Applicants also are advised that in the case of inventions made in the United States, the Director of the USPTO must issue a license before applicants can apply for a patent in a foreign country. The filing of a U.S. patent application serves as a request for a foreign filing license. The application's filing receipt contains further information and guidance as to the status of applicant's license for foreign filing.

Applicants may wish to consult the USPTO booklet, "General Information Concerning Patents" (specifically, the section entitled "Treaties and Foreign Patents") for more information on timeframes and deadlines for filing foreign patent applications. The guide is available either by contacting the USPTO Contact Center at 800-786-9199, or it can be viewed on the USPTO website at http://www.uspto.gov/web/offices/pac/doc/general/index.html.

For information on preventing theft of your intellectual property (patents, trademarks and copyrights), you may wish to consult the U.S. Government website, http://www.stopfakes.gov. Part of a Department of Commerce initiative, this website includes self-help "toolkits" giving innovators guidance on how to protect intellectual property in specific countries such as China, Korea and Mexico. For questions regarding patent enforcement issues, applicants may call the U.S. Government hotline at 1-866-999-HALT (1-866-999-4158).

LICENSE FOR FOREIGN FILING UNDER
Title 35, United States Code, Section 184
Title 37, Code of Federal Regulations, 5.11 & 5.15

GRANTED

The applicant has been granted a license under 35 U.S.C. 184, if the phrase "IF REQUIRED, FOREIGN FILING LICENSE GRANTED" followed by a date appears on this form. Such licenses are issued in all applications where the conditions for issuance of a license have been met, regardless of whether or not a license may be required as set forth in 37 CFR 5.15. The scope and limitations of this license are set forth in 37 CFR 5.15(a) unless an earlier license has been issued under 37 CFR 5.15(b). The license is subject to revocation upon written notification. The date indicated is the effective date of the license, unless an earlier license of similar scope has been granted under 37 CFR 5.13 or 5.14.

This license is to be retained by the licensee and may be used at any time on or after the effective date thereof unless it is revoked. This license is automatically transferred to any related applications(s) filed under 37 CFR 1.53(d). This license is not retroactive.

The grant of a license does not in any way lessen the responsibility of a licensee for the security of the subject matter as imposed by any Government contract or the provisions of existing laws relating to espionage and the national security or the export of technical data. Licensees should apprise themselves of current regulations especially with respect to certain countries, of other agencies, particularly the Office of Defense Trade Controls, Department of State (with respect to Arms, Munitions and Implements of War (22 CFR 121-128)); the Bureau of Industry and Security, Department of Commerce (15 CFR parts 730-774); the Office of Foreign Assets Control, Department of Treasury (31 CFR Parts 500+) and the Department of Energy.

NOT GRANTED

No license under 35 U.S.C. 184 has been granted at this time, if the phrase "IF REQUIRED, FOREIGN FILING LICENSE GRANTED" DOES NOT appear on this form. Applicant may still petition for a license under 37 CFR 5.12, if a license is desired before the expiration of 6 months from the filing date of the application. If 6 months has lapsed from the filing date of this application and the licensee has not received any indication of a secrecy order under 35 U.S.C. 181, the licensee may foreign file the application pursuant to 37 CFR 5.15(b).

UNITED STATES PATENT AND TRADEMARK OFFICE

Commissioner for Patents
United States Patent and Trademark Office
P.O. Box 1450
Alexandria, VA 22313-1450
www.uspto.gov

DUANE MORRIS LLP (TSMC)
IP DEPARTMENT
30 SOUTH 17TH STREET
PHILADELPHIA PA 19103-4196

MAILED

APR 15 2009

OFFICE OF PETITIONS

In re Application of	:	
Yi-Hsun Wu, et al.	:	
Application No. 10/644,718	:	DECISION GRANTING PETITION
Filed: August 20, 2003	:	UNDER 37 CFR 1.313(c)(2)
Attorney Docket No. N1085-00191	:	

This is a decision on the petition under 37 CFR 1.313(c)(2), filed April 14, 2009, to withdraw the above-identified application from issue after payment of the issue fee.

The petition is **GRANTED**.

The above-identified application is withdrawn from issue for consideration of a submission under 37 CFR 1.114 (request for continued examination). *See* 37 CFR 1.313(c)(2).

Petitioner is advised that the issue fee paid on March 9, 2009 cannot be refunded. If, however, this application is again allowed, petitioner may request that it be applied towards the issue fee required by the new Notice of Allowance.[1]

Telephone inquiries should be directed to Terri Williams at (571) 272-2991.

This application is being referred to Technology Center AU 2836 for processing of the request for continued examination under 37 CFR 1.114 and for consideration of the concurrently filed information disclosure statement.

Terri Williams
Petitions Examiner
Office of Petitions

[1] *The request to apply the issue fee to the new Notice may be satisfied by completing and returning the new Part B – Fee(s) Transmittal Form (along with any balance due at the time of submission). Petitioner is advised that the Issue Fee Transmittal Form **must** be completed and timely submitted to avoid abandonment of the application.*

UNITED STATES PATENT AND TRADEMARK OFFICE

Commissioner for Patents
United States Patent and Trademark Office
P.O. Box 1450
Alexandria, VA 22313-1450
www.uspto.gov

HARNESS, DICKEY & PIERCE
P.O. BOX 8910
RESTON VA 20195

COPY MAILED

OCT 0 4 2005

OFFICE OF PETITIONS

In re Patent No. 6,888,408 :
Issue Date: May 3, 2005 :
Application No. 10/644,743 : ON PETITION
Filed: August 21, 2003 :
Attorney Docket No. 45900-000754/US :

This is a decision on the petition filed May 23, 2005, 37 CFR 3.81(b)[1] to correct the assignee on the front page of the above-identified patent by way of a Certificate of Correction.

The petition is granted.

Telephone inquiries concerning this matter may be directed to the undersigned at (571) 272-3208. Any questions concerning the issuance of the Certificate of Correction should be directed to the Certificates of Correction Branch at (703) 305-8309.

The file is being forwarded to the Certificates of Correction Branch for issuance of the requested Certificate of Correction.

Karen Creasy

Karen Creasy
Petitions Examiner
Office of Petitions
Office of the Deputy Commissioner
for Patent Examination Policy

[1]See Official Gazette of June 22, 2004

UNITED STATES PATENT AND TRADEMARK OFFICE

Commissioner for Patents
United States Patent and Trademark Office
P.O. Box 1450
Alexandria, VA 22313-1450
www.uspto.gov

FINNEGAN, HENDERSON, FARABOW, GARRETT & DUNNER
LLP
901 NEW YORK AVENUE, NW
WASHINGTON DC 20001-4413

COPY MAILED

MAR 3 0 2006

OFFICE OF PETITIONS

In re Application of :
Hideki Tanaka :
Application No. 10/644,745 : ON PETITION
Filed: August 21, 2003 :
Attorney Docket No. 07553.0044 :
Title of Invention: Plasma Leak Monitoring :
Method, Plasma Processing Apparatus and
Plasma Processing Method

This is a decision on the petition under 37 CFR §1.181 filed January 26, 2005 to withdraw the holding of abandonment.

The petition filed under 37 CFR 1.181 is **Granted**.

This above-identified application became abandoned for failure to file a response to a Notice to File Missing Parts which was mailed on November 19, 2003. The Notice to File Missing Parts set an extendable two (2) month period for reply. No timely request for extension of time was obtained under the provisions of 37 CFR §1.136(a). Accordingly, this application became abandoned on January 20, 2004. A Notice of Abandonment was mailed on October 28, 2004.

Petitioner contends a reply to the Notice of Missing Parts was submitted on December 15, 2003. In support of petitioner's contention a stamped post card receipt has been provided. The communication was matched to the serial number identified in the communication, namely, serial No. 10/644,754. The communication did not timely reach the correct application (10/644,745) due to petitioner's error. As a result of this error, the application was held abandoned.

Correspondence directed to the Patent and Trademark Office concerning a previously filed application for a patent must identify the application number and filing date assigned to that application by the Office. See, 37 CFR 1.5(a). In the above-referenced

application, applicant failed to correctly identify the application by citing an incorrect application number in the correspondence. The Office elects, in this instance, to treat applicant's transposition of numbers as a correctable minor error as permitted under MPEP 502. However, applicant is reminded that minor errors, such as occurred in the instant application, are to be avoided in the future by the careful review of correspondence prior to submission to the Office.

The Notice of Abandonment is hereby vacated and the holding of abandonment is withdrawn.

This application is being forwarded to the Office of Initial Patent Examination for further processing.

Telephone inquiries concerning this matter should be directed to the undersigned at (571) 272-3215.

Charlema R. Grant

Charlema R. Grant
Petition Attorney
Office of Petitions

SPE RESPONSE FOR CERTIFICATE OF CORRECTION

Paper No.: _____

DATE : 12/11/09

TO SPE OF : ART UNIT 2915
SUBJECT : Request for Certificate of Correction for Appl. No.: 10644762
Patent No.: 7213976

Please respond to this request for a certificate of correction within 7 days.

FOR IFW FILES:

Please review the requested changes/corrections as shown in the **COCIN** document(s) in the IFW application image. No new matter should be introduced, nor should the scope or meaning of the claims be changed.

Please complete the response (see below) and forward the completed response to scanning using document code **COCX**.

FOR PAPER FILES:

Please review the requested changes/corrections as shown in the attached certificate of correction. Please complete this form (see below) and forward it with the file to:

Certificates of Correction Branch (CofC)

Randolph Square
Palm Location 7580

Should the changes be made **Valerie Jackson** **Certificates of Correction Branch**

703-756-1573

Thank You For Your Assistance

The request for issuing the above-identified correction(s) is hereby:
Note your decision on the appropriate box.

☒ **Approved** — **All** changes apply.

Approved in Part — Specify below which changes **do not** apply.

Denied — State the reasons for denial below.

Comments: The Request for Certificate of Correction is for the purpose of correcting the error appears to be on the part of the Office

/UYEN-CHAU LE/ — **SPE**

2874 — **Art Unit**

UNITED STATES PATENT AND TRADEMARK OFFICE

COMMISSIONER FOR PATENTS
UNITED STATES PATENT AND TRADEMARK OFFICE
P.O. BOX 1450
ALEXANDRIA, VA 22313-1450
WWW.USPTO.GOV

Paper No.

PILLSBURY WINTHROP SHAW PITTMAN LLP
P.O. BOX 10500
MCLEAN VA 22102

MAILED

JUN 28 2010

OFFICE OF PETITIONS

In re Application of	:	
Stevens et. al.	:	
Application No. 10/644,773	:	
Patent No. 6,925,160	:	DECISION ON PETITION
Filed: August 21, 2003	:	UNDER 37 C.F.R. § 1.378(C)
Issue Date: August 2, 2005	:	
Attorney Docket Number: MBS-101	:	
Title: SYSTEM AND METHOD FOR MANAGING CELLULAR TELEPHONE ACCOUNTS	:	

This is a decision on the petition filed pursuant to 37 C.F.R. § 1.378(c) on February 22, 2010, to accept the unintentionally delayed payment of a maintenance fee for the above-identified patent.

This petition pursuant to 37 C.F.R. § 1.378(c) is **GRANTED**.

The patent issued on August 2, 2005. The grace period for paying the 3½-year maintenance fee provided in 37 C.F.R. § 1.362(e) expired at midnight on August 2, 2009, with no payment received. Accordingly, the patent expired on August 2, 2009 at midnight.

A grantable petition pursuant to 37 C.F.R. § 1.378(c) must be accompanied by:

(1) The maintenance fee as set forth in 37 C.F.R. §§ 1.362(e) and 1.20;
(2) The surcharge for accepting a maintenance fee after expiration of a patent for non-timely payment of a maintenance fee, as set forth in 37 C.F.R. § 1.20;
(3) A statement that the delay was unintentional from

a proper party in interest, and;

(4) The petition must be filed within 24 months of the date of expiration.

With this petition, Petitioner submitted the surcharge associated with a petition to accept late payment of a maintenance fee as unintentional, the 3½-year maintenance fee, and a statement that the delay in payment of the maintenance fee was unintentional. This petition was timely filed within twenty-four months after the expiration of the six-month grace period.

Petitioner has met each of the requirements of Rule 1.378(c).

Accordingly, the maintenance fee in this case is hereby accepted and the above-identified patent is hereby reinstated as of the mail date of this decision.

It is noted that the address listed on the petition differs from the address of record. The application file does not indicate a change of correspondence address has been filed in this case, although the address given on the petition differs from the address of record. If Petitioner desires to receive future correspondence regarding this patent, the change of correspondence address must be submitted. A courtesy copy of this decision will be mailed to the address which appears on the petition. However, all future correspondence will be directed to the address of record until such time as appropriate instructions are received to the contrary. Petitioner will not receive future correspondence related to this patent unless Change of Correspondence Address, Patent Form (PTO/SB/123) is submitted for the above-identified patent. For Petitioner's convenience, a blank Change of Correspondence Address, Patent Form (PTO/SB/123), may be found at http://www.uspto.gov/web/forms/sb0123.pdf.

If appropriate, a change of fee address (form PTO/SB/47) and a request for customer number (form PTO/SB/125) should be filed in accordance with Manual of Patent Examining Procedure, section 2540.

A blank fee address form may be found at http://www.uspto.gov/web/forms/sb0047.pdf.

Telephone inquiries regarding this decision should be directed to the undersigned at (571) 272-3225.[1] Inquiries pertaining to the submission of maintenance fees should be directed to the Maintenance Fee branch at 571-272-6500.

/Paul Shanoski/
Paul Shanoski
Senior Attorney
Office of Petitions

cc: David I. Stevens
Mobilesense Technologies, Inc.
419 Old Stone Place
Simi Valley, CA 93065

1 Petitioner will note that all practice before the Office should be in writing, and the action of the Office will be based exclusively on the written record in the Office. See 37 C.F.R. § 1.2. As such, Petitioner is reminded that no telephone discussion may be controlling or considered authority for any further action(s) of Petitioner.

UNITED STATES PATENT AND TRADEMARK OFFICE

COMMISSIONER FOR PATENTS
UNITED STATES PATENT AND TRADEMARK OFFICE
P.O. BOX 1450
ALEXANDRIA, VA 22313-1450
www.uspto.gov

FULBRIGHT & JAWORSKI, LLP
666 FIFTH AVE
NEW YORK, NY 10103-3198

COPY MAILED

OCT 09 2007

OFFICE OF PETITIONS

In re Application of :
Tamar Tennenbaum :
Application No.: 10/644,775 : ON PETITION
Filed: August 21, 2003 :
Attorney Docket No.: HEALOR-202 :

This is a decision on the petition, filed October 7, 2007, under 37 CFR 1.313(c)(2) to withdraw the above-identified application from issue after payment of the issue fee.

The petition is **GRANTED**.

The above-identified application is withdrawn from issue for consideration of a submission under 37 CFR 1.114 (request for continued examination). See 37 CFR 1.313(c)(2).

Petitioner is advised that the issue fee paid on September 24, 2007, in the above-identified application, cannot be refunded. If, however, the above-identified application is again allowed, petitioner may request that it be applied towards the issue fee required by the new Notice of Allowance. [1]

Telephone inquiries relating to this decision should be directed to the undersigned at (571) 272-3204.

The application is being referred to Technology Center AU 1647 for further processing of the request for continued examination under 37 CFR 1.114 and for consideration of the concurrently filed request for correction of inventorship under 37 CFR 1.48.

Sherry D. Brinkley
Petitions Examiner
Office of Petitions

[1] *The request to apply the issue fee to the new Notice may be satisfied by completing and returning the new Part B – Fee(s) Transmittal Form (along with any balance due at the time of submission). Petitioner is advised that the Issue Fee Transmittal Form must be completed and timely submitted to avoid abandonment of the application.*

UNITED STATES PATENT AND TRADEMARK OFFICE

Commissioner for Patents
United States Patent and Trademark Office
P.O. Box 1450
Alexandria, VA 22313-1450
www.uspto.gov

FULBRIGHT & JAWORSKI, LLP
666 FIFTH AVE.
NEW YORK NY 10103-3198

MAILED

JUN 08 2010

OFFICE OF PETITIONS

In re Application of :
Tamar Tennenbaum :
Application No. 10/644,775 : DECISION ON PETITION
Filed: August 21, 2003 : UNDER 37 CFR 1.78(a)(3)
Attorney Docket No. HEALOR-202 :

This is a decision on the petition under 37 CFR 1.78(a)(3), filed March 19, 2010, to accept an unintentionally delayed claim under 35 U.S.C. §120 for the benefit of priority to a prior-filed nonprovisional application.

The petition is **DISMISSED.**

A petition for acceptance of a claim for late priority under 37 CFR 1.78(a)(3) is only applicable to those applications filed on or after November 29, 2000. Further, the petition is appropriate only after the expiration of the period specified in 37 CFR 1.78(a)(2)(ii). In addition, the petition under 37 CFR 1.78(a)(3) must be accompanied by:

(1) the reference required by 35 U.S.C. § 120 and 37 CFR 1.78(a)(2)(i) of the prior-filed application, unless previously submitted;
(2) the surcharge set forth in § 1.17(t); and
(3) a statement that the entire delay between the date the claim was due under 37 CFR 1.78(a)(2)(ii) and the date the claim was filed was unintentional. The Director may require additional information where there is a question whether the delay was unintentional.

The petition does not comply with item (1)

37 CFR 1.78(a)(2)(i) requires that any nonprovisional application claiming the benefit of one or more prior-filed copending nonprovisional applications must contain or be amended to contain a reference to each such prior-filed application, identifying it by application number (consisting of the series code and serial number) and indicating the relationship of the applications. The relationship between the applications is whether the subject application is a continuation,

divisional, or continuation-in-part of a prior-filed nonprovisional application. An example of a proper benefit claim is: "This application is a continuation of Application No. 10/---, filed---." A benefit claim that merely states: "This application claims the benefit of Application No. 10/---, filed---," does not comply with 37 CFR 1.72(a)(2)(i) since the proper relationship, which includes the type of continuing application, is not stated. Also, the status of each nonprovisional parent application (if it is patented or abandoned) should also be indicated, following the filing date of the parent nonprovisional application. *See* MPEP Section 201.11, Reference to Prior Nonprovisional Applications. The amendment fails to comply with the provisions of 37 CFR 1.78(a)(2)(i) and is therefore unacceptable.

Before the petition under 37 CFR § 1.78(a)(3) can be granted, a renewed petition under 37 CFR § 1.78(a)(3) an Application Data Sheet or a substitute amendment (complying with 37 CFR 1.121 and 37 CFR 1.76(b)(5)), which states the relationship of the prior-filed application to this application, are required.

Further correspondence with respect to this matter should be addressed as follows:

By mail: Mail Stop PETITIONS
Commissioner for Patents
Post Office Box 1450
Alexandria, VA 22313-1450

By hand: Customer Service Window
Mail Stop Petitions
Randolph Building
401 Dulany Street
Alexandria, VA 22314

By fax: (571) 273-8300
ATTN: Office of Petitions

Any questions concerning this matter may be directed to the undersigned at (571) 272-3208.

/KOC/
Karen Creasy
Petitions Examiner
Office of Petitions

UNITED STATES PATENT AND TRADEMARK OFFICE

COMMISSIONER FOR PATENTS
UNITED STATES PATENT AND TRADEMARK OFFICE
P.O. BOX 1450
ALEXANDRIA, VA 22313-1450
www.uspto.gov

Paper No.

STERNE, KESSLER,
GOLDSTEIN & FOX P.L.L.C.
1100 NEW YORK AVENUE, N.W.
WASHINGTON DC 20005

COPY MAILED

APR 0 3 2008

OFFICE OF PETITIONS

In re Application of	:	
Nancy Lan	:	
Application No. 10/644,783	:	LETTER REGARDING
Filed: August 21, 2003	:	PATENT TERM ADJUSTMENT
Atty Docket No. 1483.0370003	:	

This is in response to the "LETTER REGARDING PATENT TERM ADJUSTMENT," filed February 8, 2008. Applicants disclose that there appears to be an error in the determination of patent term adjustment pursuant to 35 U.S.C. 154(b) attached to the Notice of Allowance.

The request for review of the patent term adjustment is **GRANTED**.

The Office has updated the PAIR screen to reflect that the correct Patent Term Adjustment (PTA) determination at the time of the mailing of the Notice of Allowance is two hundred sixty-four **(264)** days. A copy of the updated PAIR screen, showing the correct determination, is enclosed.

On November 8, 2007, the Office mailed the Determination of Patent Term Adjustment under 35 U.S.C. 154(b) in the above-identified application. The Notice stated that the patent term adjustment to date is 355 days. Applicants do not disclose a basis for their assertion that the patent term adjustment may be longer than appropriate.

Nonetheless, a review of the record reveals that an additional period of reduction pursuant to 37 CFR 1.704(b) should have been

entered. Specifically, applicants did not file a Request for Continued Examination (RCE) in response to the final Office action mailed January 19, 2007, until July 19, 2007, three months and 91 days later. Accordingly, pursuant to § 1.704(b), a period of 91 days for applicant delay is being entered for applicant taking in excess of three months to respond to an Office action.

In view thereof, the initial determination of the patent term adjustment at the time of the mailing of the notice of allowance is two hundred sixty-four (264) days.

As this letter was submitted as an advisement to the Office of an error in Applicants' favor, the Office will not assess the $200.00 fee under 37 CFR 1.18(e). The Office thanks Applicants for their good faith and candor in bringing this to the attention of the Office.

The application is being forwarded to the Publications Division for issuance of a patent. The patent term adjustment indicated on the patent (as shown on the Issue Notification mailed about three weeks prior to patent issuance) will include any additional adjustment accrued both for Office delay in issuing the patent more than four months after payment of the issue fee and satisfaction of all outstanding requirements, and for the Office taking in excess of three years to issue the patent (to the extent that the three-year period does not overlap with periods already accorded and is not consumed by the filing of the RCE).

Telephone inquiries specific to this matter should be directed to the undersigned at (571) 272-3219.

Nancy Johnson
Senior Petitions Attorney
Office of Petitions

Enclosure: Copy of REVISED PALM Screen

Day : Wednesday

PALM INTRANET

Date: 4/2/2008
Time: 12:03:46

PTA Calculations for Application: 10/644783			
Application Filing Date:	08/21/2003	PTO Delay (PTO):	418
Issue Date of Patent:		Three Years:	0
Pre-Issue Petitions:	0	Applicant Delay (APPL):	63
Post-Issue Petitions:	0	Total PTA (days):	264
PTO Delay Adjustment:	-91		

File Contents History

Number	Date	Contents Description	PTO	APPL	START
56	04/02/2008	ADJUSTMENT OF PTA CALCULATION BY PTO		91	
44	11/08/2007	MAIL NOTICE OF ALLOWANCE			
43	11/06/2007	ISSUE REVISION COMPLETED			
42	11/06/2007	DOCUMENT VERIFICATION			
41	11/06/2007	NOTICE OF ALLOWANCE DATA VERIFICATION COMPLETED			
40	11/06/2007	CASE DOCKETED TO EXAMINER IN GAU			
39	10/01/2007	NOTICE OF ALLOWABILITY			
38	07/25/2007	DATE FORWARDED TO EXAMINER			
37	07/19/2007	AMENDMENT SUBMITTED/ENTERED WITH FILING OF CPA/RCE			
36	07/25/2007	DATE FORWARDED TO EXAMINER			
35	07/19/2007	REQUEST FOR CONTINUED EXAMINATION (RCE)			
34	07/25/2007	DISPOSAL FOR A RCE/CPA/129 (EXPRESS ABANDONMENT IF CPA)			
33	07/19/2007	REQUEST FOR EXTENSION OF TIME - GRANTED			
32	07/19/2007	WORKFLOW - REQUEST FOR RCE - BEGIN			
31	01/30/2007	MAIL POST CARD			
30	01/22/2007	EMAIL NOTIFICATION			
29	01/19/2007	MAIL FINAL REJECTION (PTOL - 326)			
28	01/08/2007	FINAL REJECTION			
27	11/15/2006	DATE FORWARDED TO EXAMINER			
26	10/25/2006	RESPONSE AFTER NON-FINAL ACTION			
25	07/25/2006	MAIL NON-FINAL REJECTION			
24	07/21/2006	NON-FINAL REJECTION			

23	05/15/2006	INFORMATION DISCLOSURE STATEMENT CONSIDERED			
22.7	05/15/2006	INFORMATION DISCLOSURE STATEMENT (IDS) FILED		0	20
22	05/15/2006	INFORMATION DISCLOSURE STATEMENT (IDS) FILED			
21	05/19/2006	DATE FORWARDED TO EXAMINER			
20	05/15/2006	RESPONSE AFTER NON-FINAL ACTION		63	18
19	05/15/2006	REQUEST FOR EXTENSION OF TIME - GRANTED			
18	12/13/2005	MAIL NON-FINAL REJECTION	418		-1
17	12/09/2005	NON-FINAL REJECTION			
16	11/25/2003	INFORMATION DISCLOSURE STATEMENT CONSIDERED			
15	09/24/2005	IFW TSS PROCESSING BY TECH CENTER COMPLETE			
14	08/21/2003	PRELIMINARY AMENDMENT			
13	03/17/2004	CASE DOCKETED TO EXAMINER IN GAU			
12	11/25/2003	REFERENCE CAPTURE ON IDS			
11.7	11/25/2003	INFORMATION DISCLOSURE STATEMENT (IDS) FILED			
11	11/25/2003	INFORMATION DISCLOSURE STATEMENT (IDS) FILED			
10	11/13/2003	APPLICATION RETURN FROM OIPE			
9	11/14/2003	APPLICATION IS NOW COMPLETE			
8	11/14/2003	PRE-EXAM OFFICE ACTION WITHDRAWN			
7	11/13/2003	APPLICATION RETURN TO OIPE			
6	11/13/2003	APPLICATION DISPATCHED FROM OIPE			
5	11/14/2003	APPLICATION IS NOW COMPLETE			
4	11/05/2003	CASE CLASSIFIED BY OIPE			
3	11/05/2003	CLEARED BY OIPE CSR			
2	09/16/2003	IFW SCAN & PACR AUTO SECURITY REVIEW			
1	08/21/2003	INITIAL EXAM TEAM NN			

Search Another: Application# Search

EXPLANATION OF PTA CALCULATION

EXPLANATION OF PTE CALCULATION

To go back, right click here and select Back. To go forward, right click here and select Forward. To refresh, right click here

UNITED STATES PATENT AND TRADEMARK OFFICE

Commissioner for Patents
United States Patent and Trademark Office
P.O. Box 1450
Alexandria, VA 22313-1450
www.uspto.gov

STERNE, KESSLER, GOLDSTEIN & FOX P.L.L.C.
1100 NEW YORK AVENUE, N.W.
WASHINGTON DC 20005

MAILED

JUL 16 2009

OFFICE OF PETITIONS

In re Application of :
Nancy C. Lan :
Application No. 10/644783 :
Filing/371(c) Date: 08/21/2003 :
Patent No. 7,393,872 :
Issued: 07/01/2008 :
Attorney Docket Number: :
1483.0370003 :

DECISION ON APPLICATION
FOR PATENT TERM ADJUSTMENT

This is a decision on the "REQUEST FOR RECONSIDERATION OF PATENT TERM ADJUSTMENT UNDER 37 CFR § 1.705(d)", filed August 26, 2008. Patentee requests that the revised patent term adjustment indicated on the face of the patent be corrected from 231 days to 287 days.

The application for patent term adjustment is granted to the extent indicated herein.

On July 1, 2008, the above-identified application matured into U.S. Patent No. 7,393,872. The patent issued with a PTA of two hundred thirty-one (231) days. This request for reconsideration of patent term adjustment was timely filed within two months of the issue date of the patent. See, 37 CFR 1.705(d).

Patentees do not dispute the adjustments of 441 days. Further, patentees do not dispute the reductions of 63 days and 91 days attributed to Applicant pursuant to 37 CFR 1.704(b). Instead, applicants contest the reduction of 23 days and 33 days pursuant to 37 CFR 1.704(c)(10) accorded in connection with the amended drawings filed under 37 CFR § 1.312 on May 7, 2008.

Patentee notes that the Amendment, including drawings, filed May 7, 2008, was filed in response to an Office communication expressly requested by the Examiner. As such, Patentee asserts that the Amendment and drawings have the practical effect of advancing the patent prosecution and cannot reasonably be interpreted as a circumstance of failing to engage in reasonable efforts to conclude prosecution or examination.

Patentee's arguments have been carefully considered, but are not found convincing. As to patentee's contention that the drawings were expressly requested by the Examiner, patentee is advised that in accordance with 37 CFR 1.704(c)(10), submission of an amendment under 37 CFR 1.312 or other paper after a notice of allowance has been given or mailed is deemed a failure to engage in reasonable efforts to conclude prosecution.

The Office clarified the Rule in 1247 Off. Gaz. Pat. Office 111 (June 26, 2001), which states: "After a 'Notice of Allowance' has been mailed, submissions by an applicant that cause delay in processing or examination of an application will be considered a 'failure to engage in reasonable efforts' to conclude prosecution."

Moreover, papers that will be considered a failure to engage in reasonable efforts to conclude processing or examination of an application include: (1) a request for a refund; (2) a status letter; **(3) amendments under 37 CFR 1.312**; (4) late priority claims; (5) a certified copy of a priority document; **(6) drawings;** (7) letters related to biologic deposits; and (8) oaths or declarations. (emphasis supplied). See, MPEP 2732.

In this instance, Notice of Allowance was mailed on November 8, 2007. The issue fee was submitted February 8, 2008. Thereafter, a drawing requirement was mailed on March 25, 2008. An amendment and drawings were submitted May 7, 2008. Accordingly, the adjustment of 441 days is properly reduced 23 days in accordance with 37 CFR 1.704(c)(10), the reduction having commenced May 7, 2008, the date that the post-allowance submission was filed, and ended May 29, 2008, the date that the Office communication in response thereto was mailed.

The adjustment was errantly reduced an additional 33 days in connection with the drawings filed May 7, 2008. However, a review of the Office communication mailed May 29, 2008 sufficiently establishes that said Office communication was mailed in response to both the amendment and drawings, both of which were filed May 7, 2008.

In view thereof, at the time of issuance, the patent was entitled to an adjustment of 264 days (adjustments totalling 441 days less reductions totalling 177 days).

The Office acknowledges submission of the $200.00 fee set forth in 37 CFR 1.18(e). No additional fees are required.

The application file is being forwarded to the Certificates of Correction Branch for issuance of a certificate of correction in order to rectify the Office error pursuant to 37 CFR 1.704(c)(10) as noted *supra* . The Office will issue a certificate of correction indicating that the term of the above-identified patent is extended or adjusted by **264** days.

Any request for reconsideration of this decision must be submitted within ONE MONTH of the mail date indicated herein. The time period for seeking reconsideration is not subject to extension under 37 CFR 1.136.

Telephone inquiries specific to this matter should be directed to Attorney Derek Woods, at (571) 272-3232.

Alesia Brown
Petitions Attorney
Office of Petitions
Office of the Deputy Commissioner
for Patent Examination Policy

Enclosure: Copy of DRAFT Certificate of Correction

UNITED STATES PATENT AND TRADEMARK OFFICE

CERTIFICATE OF CORRECTION

PATENT : 7,393,872 B2

DATED : July 1, 2008

INVENTOR(S) : Lan

It is certified that error appears in the above-identified patent and that said Letters Patent is hereby corrected as shown below:

On the cover page,

[*] Notice: Subject to any disclaimer, the term of this patent is extended or adjusted under 35 USC 154(b) by (231) days.

Delete the phrase "by 231 days" and insert – by 264 days--

UNITED STATES PATENT AND TRADEMARK OFFICE

COMMISSIONER FOR PATENTS
UNITED STATES PATENT AND TRADEMARK OFFICE
P.O. BOX 1450
ALEXANDRIA, VA 22313-1450
www.uspto.gov

Paper No.

KENYON & KENYON
1500 K STREET, N.W., SUITE 700
WASHINGTON, DC 20005

COPY MAILED

AUG 2 6 2004

OFFICE OF PETITIONS

In re Application of :
Vesely and De Simone :
Application No. 10/644,787 :
Filed: August 21, 2003 :
Title of Invention: :
STRAINS OF BACTERIA AND PHARMACEUTICAL :
COMPOSITION CONTAINING ONE OR MORE OF :
SUCH STRAINS AND USE OF SAME FOR :
PREVENTING AND TREATING DISEASES :
ASSOCIATED WITH OR CAUSED BY ALTERED :
METABOLISM OF BILE ACIDS :

DECISION REFUSING STATUS UNDER 37 CFR 1.47

This is in response to a petition under 37 CFR 1.47(a), filed March 4, 2004, to allow the other inventor(s) to proceed with the application on behalf of himself or herself and the nonsigning inventor(s), and also in response to the "Response to Second Notice to File Missing Parts of Nonprovisional Application", filed with the instant petition.

The rule 47 petition

The petition is **dismissed**.

Rule 47 applicant is given TWO (2) MONTHS from the mailing date of this decision to reply, correcting the below-noted deficiencies. Any reply should be entitled "Request for Reconsideration of Petition Under 37 CFR 1.47(a)", and should only address the deficiencies noted below, except that the reply may include an oath or declaration executed by the non-signing inventor. Failure to respond will result in abandonment of the application. Any extensions of time will be governed by 37 CFR 1.136(a).

The above-identified application was filed on August 21, 2003, without an oath or declaration. The Office mailed a Notice to File Missing Parts of Nonprovisional Application (hereinafter "Notice"), on January 21, 2004, requiring *inter alia*, an executed oath or declaration.

In response to the Notice, Applicant files the instant petition under 37 CFR 1.47(a), to allow the other inventor(s) to proceed with the application on behalf of himself or herself and the nonsigning inventors. Applicants aver that the nonsigning inventor was sent a declaration for execution on March 3, 2004.

Applicants subsequently received a letter from putative legal counsel for the nonsigning inventor, indicating that the nonsigning inventor would not sign the declaration.

Applicable Law

A grantable petition under 37 CFR 1.47(a) requires: (1) proof that the non-signing inventor cannot be reached or refuses to sign the oath or declaration after having been presented with the application papers (specification, claims and drawings); (2) an acceptable oath or declaration in compliance with 35 U.S.C. §§ 115 and 116; (3) the petition fee; and (4) a statement of the last known address of the non-signing inventor. Applicant lacks item (1).

As to item (1),

> A refusal by an inventor to sign an oath or declaration when the inventor has not been presented with the application papers does not itself suggest that the inventor is refusing to join the application unless it is clear that the inventor understands exactly what he or she is being asked to sign and refuses to accept the application papers. A copy of the application papers should be sent to the last known address of the nonsigning inventor, or, if the nonsigning inventor is represented by counsel, to the address of the nonsigning inventor's attorney. The fact that an application may contain proprietary information does not relieve the 37 CFR 1.47 applicant of the responsibility to present the application papers to the inventor if the inventor is willing to receive the papers in order to sign the oath or declaration. It is noted that the inventor may obtain a complete copy of the application, unless the inventor has assigned his or her interest in the application, and the assignee has requested that the inventor not be permitted access. See MPEP § 106. It

> is reasonable to require that the inventor be presented with the application papers before a petition under 37 CFR 1.47 is granted since such a procedure ensures that the inventor is apprised of the application to which the oath or declaration is directed. In re Gray, 115 USPQ 80 (Comm'r Pat. 1956).

MPEP 409.03(d)

The MPEP further provides that

> [w]here a written refusal to join in the application is alleged, the circumstances of the presentation of the application papers and of the refusal must be specified in a statement of facts by the person who presented the inventor with the application papers and/or to whom the refusal was made. Statements by a party not present when an oral refusal is made will not be accepted. Proof that a bona fide attempt was made to present a copy of the application papers (specification, including claims, drawings, and oath or declaration) to the nonsigning inventor for signature, but the inventor refused to accept delivery of the papers or expressly stated that the application papers should not be sent, may be sufficient. When there is an express oral refusal, that fact along with the time and place of the refusal must be stated in the statement of facts. When there is an express written refusal, a copy of the document evidencing that refusal must be made part of the statement of facts. (Emphasis supplied). The document may be redacted to remove material not related to the inventor's reasons for refusal.

Id.

Conclusion

Applicant must attempt to present a copy of the application papers to the inventor, and in this instance provide a copy of any documents evidencing a refusal to join in the application.

The Response to Second Notice to File Missing Parts of Nonprovisional Application

Applicant also files a Response to Second Notice to File Missing Parts of Nonprovisional Application, wherein Applicant notes a second Notice to File Missing Parts of Application was mailed in this application on April 1, 2004, which requires a new oath identifying this application number because the oath allegedly does not identify the residence and citizenship of each inventor. Applicant argues that the oath/declaration [filed March 22, 2004] provides the residence and citizenship of each inventor and otherwise complies with the MPEP 605.04. A review of the oath/declaration filed March 22, 2004 reveals that Applicant is correct.

The second Notice to File Missing Parts of Application, mailed April 1, 2004, was mailed in error and is hereby withdrawn.

Further correspondence with respect to this matter should be addressed as follows:

By mail: Director for Patents
PO Box 1450
Alexandria, VA 22313-1450

By FAX: (703) 872-9306
Attn: Office of Petitions

By hand: 2201 South Clark Place
Customer Window
Crystal Plaza Two, Lobby Room 1B03
Arlington, VA 22202

Telephone inquiries concerning this decision should be directed to the undersigned at (703) 305-0014.

Derek L. Woods
Petitions Attorney
Office of Petitions

UNITED STATES PATENT AND TRADEMARK OFFICE

Commissioner for Patents
United States Patent and Trademark Office
P.O. Box 1450
Alexandria, VA 22313-1450
www.uspto.gov

KRATZ, QUINTOS & HANSON, LLP
1420 K Street, N.W.
Suite 400
WASHINGTON DC 20005

COPY MAILED

NOV 26 2007

OFFICE OF PETITIONS

In re Application of :
Yamashita, et al. :
Application No. 10/644,802 : ON PETITION
Filed: August 21, 2003 :
Attorney Docket No. 031018 :

This is a decision on the petition under 37 CFR 1.137(b), filed September 6, 2007, to revive the above-identified application.

This application became abandoned for failure to timely pay the issue fee and publication fee within three (3) months of the mailing of the Notice of Allowance and Fee(s) Due, mailed May 7, 2007. Accordingly, this application became abandoned on August 8, 2007.

Applicants have submitted a proper reply in the form of the $1,400.00 issue fee, the $300.00 publication fee and a completed PTOL-85b, a proper statement of the unintentional nature of the delay in responding to the May 7, 2007 Notice of Allowance and Fee(s) Due, and the $1,500.00 petition fee.

The petition is **granted**.

This application is being forwarded to Publishing Division for processing into a patent.

Telephone inquiries concerning this matter may be directed to the undersigned at (571) 272-3230.

Shirene Willis Brantley
Senior Petitions Attorney
Office of Petitions

SPE RESPONSE FOR CERTIFICATE OF CORRECTION

Paper No.:20081107

DATE : November 07, 2008

TO SPE OF : ART UNIT 2628

SUBJECT : Request for Certificate of Correction on Patent No.: 7193636

A response is requested with respect to the accompanying request for a certificate of correction.

Please complete this form and return with file, within **7** days to:
Certificates of Correction Branch - ST (South Tower) 9A22
Palm location **7590** - Tel. No. (703) 305-8309

With respect to the change(s) requested, correcting Office and/or Applicant's errors, should the patent read as shown in the certificate of correction? No new matter should be introduced, nor should the scope or meaning of the claims be changed.

Thank You For Your Assistance **Certificates of Correction Branch**

The request for issuing the above-identified correction(s) is hereby:

Note your decision on the appropriated box.

☒ **Approved** All changes apply.

☐ **Approved in Part** Specify below which changes **do not** apply.

☐ **Denied** State the reasons for denial below.

Comments:

/Ulka Chauhan/
Supervisory Patent Examiner, Art Unit 2628

UNITED STATES PATENT AND TRADEMARK OFFICE

COMMISSIONER FOR PATENTS
UNITED STATES PATENT AND TRADEMARK OFFICE
P.O. BOX 1450
ALEXANDRIA, VA 22313-1450
www.uspto.gov

BROWDY AND NIEMARK, P.L.L.C.
SUITE 300
624 NINTH STREET, N.W.
WASHINGTON DC 20001-5303

COPY MAILED

OCT 17 2007

OFFICE OF PETITIONS

In re Patent No. 6932875 :
Issue Date: 08/23/2005 :
Application No. 10/644880 : NOTICE
Filed: 08/21/2003 :
Attorney Docket No. CHENG-45A :

This is a notice regarding your request for acceptance of a fee deficiency submission under 37 CFR 1.28, filed on 11 September, 2007.

The Office no longer investigates or rejects original or reissue patent under 37 CFR 1.56. **1098 Off. Gaz. Pat. Office 502 (January 3, 1989)**. Therefore, nothing in this Notice is intended to imply that an investigation was done.

Your fee deficiency submission under 37 CFR 1.28 is hereby **ACCEPTED**.

This patent is no longer entitled to small entity status. Accordingly, all future fees paid in this patent must be paid at the large entity rate.

Inquiries related to this communication should be directed to the undersigned at (571) 272-3231.

DWood

Douglas I. Wood
Attorney
Office of Petitions

UNITED STATES PATENT AND TRADEMARK OFFICE

Commissioner for Patents
United States Patent and Trademark Office
P.O. Box 1450
Alexandria, VA 22313-1450
www.uspto.gov

Paper No. ____

DICKSTEIN SHAPIRO MORIN & OSHINSKY LLP
2101 L STREET NW
WASHINGTON DC 20037-1526

COPY MAILED

AUG 2 5 2004

OFFICE OF PETITIONS

In re Application of :
Joel A. Drewes :
Application No. 10/644,882 : DECISION GRANTING PETITION
Filed: August 21, 2003 : UNDER 37 CFR 1.313(c)(2)
Attorney Docket No. M4065.0594/P594-A :

This is a decision on the petition, filed August 24, 2004, under 37 CFR 1.313(c)(2) to withdraw the above-identified application from issue after payment of the issue fee.

The petition is **GRANTED**.

The above-identified application is withdrawn from issue for consideration of a submission under 37 CFR 1.114 (request for continued examination). See 37 CFR 1.313(c)(2).

Petitioner is advised that the issue fee paid on July 27, 2004 in the above-identified application cannot be refunded. If, however, the above-identified application is again allowed, petitioner may request that it be applied towards the issue fee required by the new Notice of Allowance.[1]

Telephone inquiries should be directed to the undersigned at (703) 305-8680.

This matter is being referred to Technology Center AU 2818 for processing of the request for continued examination under 37 CFR 1.114 and for consideration of the concurrently filed Information Disclosure Statement.

Frances Hicks
Petitions Examiner
Office of Petitions
Office of the Deputy Commissioner
for Patent Examination Policy

---

[1] *The request to apply the issue fee to the new Notice may be satisfied by completing and returning the new Issue Fee Transmittal Form PTOL-85(b), which includes the following language thereon: "Commissioner for Patents is requested to apply the Issue Fee and Publication Fee (if any) or re-apply any previously paid issue fee to the application identified above." Petitioner is advised that, whether a fee is indicated as being due or not, the Issue Fee Transmittal Form must be completed and timely submitted to avoid abandonment. Note the language in bold text on the first page of the Notice of Allowance and Fee(s) Due (PTOL-85).*

UNITED STATES PATENT AND TRADEMARK OFFICE

Commissioner for Patents
United States Patent and Trademark Office
P.O. Box 1450
Alexandria, VA 22313-1450
www.uspto.gov

DOWELL & DOWELL PC
SUITE 309
1215 JEFFERSON DAVIS HIGHWAY
ARLINGTON, VA 22202

COPY MAILED

MAY 0 5 2004

OFFICE OF PETITIONS

In re Application of :
Goldenberg, Toth, and Kapps :
Application No.: 10/644,894 : DECISION ACCORDING
Filed: August 21, 2003 : RULE 47(a) STATUS
Attorney Docket No: 14422 :
For: STRETCHED ROLLED ELECTROACTIVE POLYMER :
TRANSDUCERS AND METHOD OR PRODUCING THE SAME

This is in response to the petition under 37 CFR 1.47(a), filed March 17, 2004.

The petition is **GRANTED**.

The above-identified application and papers have been reviewed and found in compliance with 37 CFR 1.47(a). This application is hereby accorded Rule 1.47(a) status.

The above-cited application was filed on August 21, 2003, and was not accompanied by a proper oath or declaration. A Notice to File Missing Parts of Nonprovisional Application was mailed on September 17, 2003, requiring an properly executed declaration, $65.00 surcharge, and payment of the filing fee. The notice allowed an extendable period for reply of two months from its mailing date. On March 17, 2004, the instant petition was filed along with a request for an extension of time within the fourth month, and an oath or declaration.

Petitioner has shown that inventor Toth has constructively refused to join the filing of the above-identified application after having been presented with the application papers. The above-identified application and papers have been reviewed and found in compliance with 37 CFR 1.47(a). This application is hereby accorded Rule 1.47(a) status.

As provided in Rule 1.47(c), this Office will forward notice of this application's filing to the non-signing inventor at the addresses given in the petition. Notice of the filing of this application will also be published in the Official Gazette.

This application will be forwarded to the Office of Initial Patent Examination for further processing.

Telephone inquiries should be directed to the undersigned at (703) 305-0010.

Kenya A. McLaughlin
Petitions Attorney
Office of Petitions

UNITED STATES PATENT AND TRADEMARK OFFICE

Commissioner for Patents
United States Patent and Trademark Office
P.O. Box 1450
Alexandria, VA 22313-1450
www.uspto.gov

Landy Toth
30 Charles Street, W.
Apartment 419
Toronto, Ontario M4Y 1R5
CANADA

COPY MAILED

MAY 0 5 2004

OFFICE OF PETITIONS

In re Application of
Goldenberg, Toth, and Kapps :
Application No. 10/644,894 :
Filed: August 21, 2003 : LETTER
Attorney Docket Number: 14422 :
For: STRETCHED ROLLED ELECTROACTIVE POLYMER TRANSDUCER AND METHOD FOR PRODUCING THE SAME

Dear Mr. Toth:

You are named as a joint inventor in the above-identified United States reissue patent application filed under the provisions of 35 U.S.C. 116 (United States Code) and 37 CFR 1.47(a), Rules of Practice in Patent Cases. Should a patent be granted on the application you will be designated therein as a joint inventor.

As a joint inventor, you are entitled to inspect any paper in the file wrapper of the application, order copies of all or any part thereof (at a prepaid cost per 37 CFR 1.19) or make your position of record in the application. Alternatively, you may arrange to do any of the preceding through a registered patent attorney or agent presenting written authorization from you. If you care to join the application, counsel of record (see below) would presumably assist you. Joining in the application would entail the filing of an appropriate oath or declaration by you pursuant to 37 CFR 1.63. It should be further noted that any assignee of record of the entire interest in the application may request that the inventor(s) be excluded from access to the application. If the request is granted, you will be informed of that fact and will only be permitted to inspect the application on sufficient showing of why such inspection is necessary to conserve your rights. See *MPEP* 106, citing, *In re The Kellog Switchboard & Supply Company*, 1906 C.D. 274 (Comm'r Pat. 1906).

Telephone inquiries regarding this communication should be directed to Petitions Attorney Kenya A. McLaughlin at (703) 305-0010. Requests for information regarding your application should be directed to the File Information Unit at (703) 308-2733. Information regarding how to pay for and order a copy of the application, or a specific paper in the application, should be directed to Certification Division at (703) 308-9726 or 1-800-972-6382 (outside the Washington D.C. area).

Kenya A. McLaughlin
Petitions Attorney
Office of Petitions

DOWELL & DOWELL PC
SUITE 309
1215 JEFFERSON DAVIS HIGHWAY
ARLINGTON, VA 22202

UNITED STATES PATENT AND TRADEMARK OFFICE

Commissioner for Patents
United States Patent and Trademark Office
P.O. Box 1450
Alexandria, VA 22313-1450
www.uspto.gov

WOODCOCK WASHBURN LLP
(MICROSOFT CORPORATION)
CIRA CENTRE, 12TH FLOOR
2929 ARCH STREET
PHILADELPHIA PA 19104-2891

COPY MAILED

FEB 03 2009

OFFICE OF PETITIONS

In re Application of :
KOLMYKOV-ZOTOV et al. :
Application No. 10/644,899 : DECISION ON APPLICATION
Filed: August 21, 2003 : FOR
Docket No. MSFT-6090/304449.01: PATENT TERM ADJUSTMENT

This is a decision on the "APPLICATION FOR PATENT TERM ADJUSTMENT," filed December 10, 2008. Applicant requests that the determination of patent term adjustment under 35 U.S.C. 154(b) be corrected from 229 days to 410 days.

The application for patent term adjustment is **DISMISSED**.

On September 10, 2008, the Office mailed the Determination of Patent Term Adjustment under 35 U.S.C. 154(b) in the above-identified application. The Notice stated that the patent term adjustment (PTA) to date is 229 days. On December 10, 2008, applicant timely submitted the instant application for patent term adjustment[1].

Applicant states that no terminal disclaimer has been filed in this application.

[1] The Office records show that the issue fee was received on December 10, 2008.

Applicant disputes the period of reduction of 5 days for the filing of a reply in response to the Notice to File Missing Parts of Nonprovisional Application (Notice to File Missing Parts) on December 22, 2003, as well as period of reduction of 287 days for the filing of an Information Disclosure Statement with a Supplementary European Search Report (IDS) on November 14, 2006.

Specifically, applicant asserts that a period of reduction of 35 days should be entered, instead of 5 days for the filing of the reply to the Notice to File Missing Parts. Applicant argues the period of reduction should be calculated as the number of days from the due date for the reply to the Notice to Filing Missing Parts (i.e. two-month period for reply from the mail date of the Notice to File Missing Parts), November 17, 2003, to the date the reply was filed, December 22, 2003. Similarly, applicant avers that a period of reduction of 67 days should be entered, instead of 287 days for the filing of the IDS, counting the number of days beginning on the September 7, 2006 due date for the IDS, and ending on November 14, 2006, the date the IDS was filed.

Applicant's arguments have been considered, but are without merit. The application history has been reviewed and it has been concluded that the determination of patent term adjustment under 35 U.S.C. 154(b) of 229 days is correct.

It appears that applicant has incorrectly evaluated the period of reduction for the filing of the reply to the Notice to File Missing Parts. Pursuant to 37 CFR 1.704(b):

> With respect to the grounds for adjustment set forth in §§ 1.702(a) through (e), and in particular the ground of adjustment set forth in § 1.702(b), an applicant shall be deemed to have failed to engage in reasonable efforts to conclude processing or examination of an application for the cumulative total of any periods of time in excess of three months that are taken to reply to any notice or action by the Office making any rejection, objection, argument, or other request, measuring such three-month period from the date the notice or action was mailed or given to the applicant, in which case the period of adjustment set forth in § 1.703 shall be reduced by the number of days, if any, beginning on the day after the date that is three months after the date of mailing or

> transmission of the Office communication notifying the applicant of the rejection, objection, argument, or other request and ending on the date the reply was filed. **The period, or shortened statutory period, for reply that is set in the Office action or notice has no effect on the three-month period set forth in this paragraph.**

(Emphasis added). That is, an applicant is subject to a reduction of patent term adjustment under 35 U.S.C. 154(b)(2)(C)(ii) and 37 CFR 1.704(b) if the applicant does not reply to the Office communication within three months regardless of the period for reply set in the Office action or notice.

In this instance, applicant did not file a reply to the Notice to File Missing Parts until December 22, 2003, three months and 5 days from the mail date of the Notice. Thus, applicant failed to engage in reasonable efforts to conclude processing or examination of this application. The period of adjustment was properly reduced by 5 days, counting the number of days in the period beginning on the day after the date that is three months after the date of mailing of the Notice to File Missing Parts, December 18, 2003, ending on the date the reply was filed, December 22, 2003. See 37 CFR 1.704(b). Accordingly, the period of reduction of 5 days will remain.

Additionally, applicant has incorrectly evaluated the period of reduction for the filing of the IDS with a Supplementary European Search Report on November 14, 2006. It is undisputed that after filing a response on February 9, 2006, applicant filed a supplemental reply or other paper in the form of the IDS on November 14, 2006. The record does not support a conclusion that the examiner expressly requested the IDS. Further, a review of the IDS, filed November 14, 2006, reveals that applicant did not include a proper statement under 37 CFR 1.704(d).[1] Thus, under the circumstances of this application, the submission of the supplemental reply or other paper on

---

[1] Pursuant to 37 CFR 1.704(d):

> A paper containing only an information disclosure statement in compliance with §§ 1.97 and 1.98 will not be considered a failure to engage in reasonable efforts to conclude prosecution (processing or examination) of the application under paragraphs (c)(6), (c)(8), (c)(9), or (c)(10) of this section if it is accompanied by a statement that each item of information contained in the information disclosure statement was first cited in any communication from a foreign patent office in a

November 14, 2006, is a basis for reduction of patent term adjustment pursuant to 37 CFR 1.704(c)(8).

37 CFR 1.704(c)(8) states:

> Submission of a supplemental reply or other paper, other than a supplemental reply or other paper expressly requested by the examiner, after a reply has been filed, in which case the period of adjustment set forth in § 1.703 shall be reduced by the number of days, if any, beginning on the day after the date the initial reply was filed and ending on the date that the supplemental reply or other such paper was filed[.]

In this instance, the period of adjustment was properly reduced by 278 days, counting the number of days beginning on the day after the date the initial reply was filed, February 10, 2006, and ending on the date that the IDS was filed, November 14, 2006. See 37 CFR 1.704(c)(8). Accordingly, the period of reduction of 278 days will remain.

In view thereof, the patent term adjustment at the time of the mailing of the notice of allowance remains 229 days.

The Office will charge the $200.00 fee set forth in 37 CFR 1.18(e) to the Deposit Account as authorized. No additional fees are required.

Applicant is reminded that any delays by the Office pursuant to 37 CFR 1.702(a)(4) and 1.702(b) and any applicant delays under 37 CFR 1.704(c)(10) will be calculated at the time of the issuance of the patent and applicants will be notified in the Issue Notification letter that is mailed to applicant approximately three weeks prior to issuance.

The Office of Data Management has been advised of this decision. This matter is being referred to the Office of Data Management for issuance of the patent.

---

counterpart application and that this communication was not received by any individual designated in § 1.56(c) more than thirty days prior to the filing of the information disclosure statement. This thirty-day period is not extendable.

Telephone inquiries specific to this matter should be directed to Christina Tartera Donnell, Senior Petitions Attorney, at (571) 272-3211.

Nancy Johnson
Senior Petitions Attorney
Office of Petitions

UNITED STATES PATENT AND TRADEMARK OFFICE

Commissioner for Patents
United States Patent and Trademark Office
P.O. Box 1450
Alexandria, VA 22313-1450
www.uspto.gov

MATTINGLY, STANGER, & MALUR, P.C.
1800 DIAGONAL ROAD
SUITE 370
ALEXANDRIA VA 22314

MAILED

MAY 3 1 2005

Technology Center 2100

In re Application of: Shinohara et al.
Application No. 10/644,936
Filed: August 21, 2003
For: METHOD AND PROGRAM FOR DISCLOSING AND PROVIDING SERVICES ON NETWORK

DECISION ON PETITION TO MAKE SPECIAL (ACCELERATED EXAMINATION) UNDER M.P.E.P. §708.02 (VIII)

This is a response to the petition filed April 25, 2005, under 37 C.F.R. §1.102(d) and M.P.E.P. §708.02 (VIII): Accelerated Examination, to make the above-identified application special.

The Petition is **GRANTED**.

M.P.E.P. §708.02, Section VIII, which sets out the prerequisites for a grantable petition for Accelerated Examination under 37 C.F.R. §1.102(d) states in relevant part:

A new application (one which has not received any examination by the examiner) may be granted special status provided that applicant (and this term includes applicant's attorney or agent) complies with each of the following items:

(a) Submits a petition to make special accompanied by the fee set forth in **37 CFR 1.17(h)**;

(b) Presents all claims directed to a single invention, or if the Office determines that all the claims presented are not obviously directed to a single invention, will make an election without traverse as a prerequisite to the grant of special status;

(c) Submits a statement(s) that a pre-examination search was made, listing the field of search by class and subclass, publication, Chemical Abstracts, foreign patents, etc. The pre-examination search must be directed to the invention as claimed in the application for which

special status is requested. A search made by a foreign patent office satisfies this requirement;

(d) Submits one copy each of the references deemed most closely related to the subject matter encompassed by the claims if said references are not already of record; and

(e) Submits a detailed discussion of the references, which discussion points out, with the particularity required by 37 CFR 1.111 (b) and (c), how the claimed subject matter is patentable over the references.

Petition to Make Special **GRANTED** since all of the requirements for special status under MPEP § 708.02(VIII) have been met.

The application file is being forwarded to the Examiner for accelerated examination in accordance with the procedures set forth in M.P.E.P. §708.02, Section VIII. If the application is subsequently allowed, it will be given priority for printing. See M.P.E.P. §1309.

Brian L. Johnson
Special Program Examiner
Technology Center 2100
Computer Architecture, Software and Information Security
571-272-3595

5/12/05

JC

UNITED STATES PATENT AND TRADEMARK OFFICE

COMMISSIONER FOR PATENTS
UNITED STATES PATENT AND TRADEMARK OFFICE
P.O. BOX 1450
ALEXANDRIA, VA 22313-1450
www.uspto.gov

MAILED

APR 15 2004

DIRECTOR'S OFFICE
TECHNOLOGY CENTER 3600

SILICON VALLEY INTELLECTUAL PROPERTY GROUP
P.O. BOX 721120
SAN JOSE CA 95172-1120

In re application of : **DECISION ON PETITION**
John R. Abe : **TO MAKE SPECIAL**
Application No. 10/644,944 : **(ACCELERATED**
Filed: August 19, 2003 : **EXAMINATION)**
For: CONTINUOUS PRICE OPTIMIZATION :
SYSTEM, METHOD AND COMPUTER PROGRAM
PRODUCT FOR SATISFYING CERTAIN BUSINESS
OBJECTIVES

This is in response to the petition filed on December 11, 2003 to make the above-identified application special on the basis of special examining procedure for certain new applications - accelerated examination as set forth in MPEP § 708.02 VIII.

The requirements for granting special status under this section are: (A) a petition to make special accompanied by the fee set forth in 37 CFR 1.17(i); (B) all claims being directed to a single invention, or an election without traverse if the Office determines that all the claims are not directed to a single invention; (C) a statement that a pre-examination search was made listing the field of search; (D) one copy of each of the references deemed most closely related to the subject matter encompassed by the claims if said references are not already of record; and (E) a detailed discussion of how the claimed subject matter is patentable over the references in accordance with 37 CFR 1.111 (b) and (c).

Since all of the requirements for special status under MPEP § 708.02 VIII have been met, the petition is **GRANTED**.

The examiner is directed (1) to make an interference search for possible interfering applications, (2) to promptly examine this application out of turn, and (3) if any interfering application is discovered, to examine such application simultaneously and state in the first official letter of such application that it is being taken out of turn because of a possible interference.

Petitioner is advised that this application will continue to be special, throughout its entire prosecution and pendency, including interference or appeal, if any, only if petitioner makes a prompt ***bona fide*** effort, in response to each Office action, to place the application in condition for allowance, even if it is necessary to conduct an interview with the examiner to accomplish this purpose.

SUMMARY: Petition to Make Special **GRANTED**.

Randolph A. Reese
Special Programs Examiner
Technology Center 3600
(703) 308-2121

RAR/mjz: 3/29/04

SILICON VALLEY IP GROUP, PC

OFFICIAL

95 SOUTH MARKET ST., SUITE 420
SAN JOSE, CA 95113

TELEPHONE (408) 971-2573
FAX (408) 971-4660

RECEIVED
CENTRAL FAX CENTER
MAY 28 2004

FAX COVER SHEET

Date:	May 28, 2004	**Phone Number**	**Fax Number**
To:	Examiner WOO, RICHARD SUKYOON, USPTO		(703) 872-9306
From:	Kevin J. Zilka		

Docket No.: ABE1P002 **App. No: 10/644,944**

Total Number of Pages Being Transmitted, Including Cover Sheet: 03

Message:

Please deliver to Examiner Woo.

Examiner Woo,

Per our conversation of May 24, 2004, attached is the USPTO notice that the above application has been granted special status. We look forward to receiving your first action as soon as possible, and will follow up within a month if we have not heard from you.

Thank you,

Kevin J. Zilka

☐ *Original to follow Via Regular Mail* X *Original will Not be Sent* ☐ *Original will follow Via Overnight Courier*

****
The information contained in this facsimile message is attorney privileged and confidential information intended only for the use of the individual or entity named above. If the reader of this message is not the intended recipient, you are hereby notified that any dissemination, distribution or copy of this communication is strictly prohibited. If you have received this communication in error, please immediately notify us by telephone (if long distance, please call collect) and return the original message to us at the above address via the U.S. Postal Service. Thank you.
****

IF YOU DO NOT RECEIVE ALL PAGES OR IF YOU ENCOUNTER
ANY OTHER DIFFICULTY, PLEASE PHONE Erica
AT (408) 971-2573 AT YOUR EARLIEST CONVENIENCE

May 28, 2004

UNITED STATES PATENT AND TRADEMARK OFFICE

COMMISSIONER FOR PATENTS
UNITED STATES PATENT AND TRADEMARK OFFICE
P.O. BOX 1450
ALEXANDRIA, VA 22313-1450
www.uspto.gov

MAILED

APR 15 2004

DIRECTOR'S OFFICE
TECHNOLOGY CENTER 3600

SILICON VALLEY INTELLECTUAL PROPERTY GROUP
P.O. BOX 721120
SAN JOSE CA 95172-1120

In re application of
John R. Abe
Application No. 10/644,944
Filed: August 19, 2003
For: CONTINUOUS PRICE OPTIMIZATION SYSTEM, METHOD AND COMPUTER PROGRAM PRODUCT FOR SATISFYING CERTAIN BUSINESS OBJECTIVES

: DECISION ON PETITION
: TO MAKE SPECIAL
: (ACCELERATED
: EXAMINATION)

This is in response to the petition filed on December 11, 2003 to make the above-identified application special on the basis of special examining procedure for certain new applications - accelerated examination as set forth in MPEP § 708.02 VIII.

The requirements for granting special status under this section are: (A) a petition to make special accompanied by the fee set forth in 37 CFR 1.17(i); (B) all claims being directed to a single invention, or an election without traverse if the Office determines that all the claims are not directed to a single invention; (C) a statement that a pre-examination search was made listing the field of search; (D) one copy of each of the references deemed most closely related to the subject matter encompassed by the claims if said references are not already of record; and (E) a detailed discussion of how the claimed subject matter is patentable over the references in accordance with 37 CFR 1.111 (b) and (c).

Since all of the requirements for special status under MPEP § 708.02 VIII have been met, the petition is **GRANTED**.

The examiner is directed (1) to make an interference search for possible interfering applications, (2) to promptly examine this application out of turn, and (3) if any interfering application is discovered, to examine such application simultaneously and state in the first official letter of such application that it is being taken out of turn because of a possible interference.

Petitioner is advised that this application will continue to be special, throughout its entire prosecution and pendency, including interference or appeal, if any, only if petitioner makes a prompt ***bona fide*** effort, in response to each Office action, to place the application in condition for allowance, even if it is necessary to conduct an interview with the examiner to accomplish this purpose.

SUMMARY: Petition to Make Special **GRANTED**.

Randolph A. Reese
Special Programs Examiner
Technology Center 3600
(703) 308-2121

RAR/mjz: 3/29/04

UNITED STATES PATENT AND TRADEMARK OFFICE

Commissioner for Patents
United States Patent and Trademark Office
P.O. Box 1450
Alexandria, VA 22313-1450
www.uspto.gov

HEWLETT PACKARD COMPANY
P O BOX 272400, 3404 E. HARMONY ROAD
INTELLECTUAL PROPERTY ADMINISTRATION
FORT COLLINS CO 80527-2400

COPY MAILED
AUG 07 2008

In re Application of	:	
Jennifer Jie Fu	:	
Application No. 10/644,948	:	DECISION ON PETITION
Filed: August 19, 2003	:	
Attorney Docket No. 200209712-1	:	

This is a decision on the petition under the unintentional provisions of 37 CFR 1.137(b), filed November 13, 2007, to revive the above-identified application.

The petition is **GRANTED**.

The application became abandoned for failure to reply in a timely manner to the non-final Office action mailed, December 20, 2006, which set a shortened statutory period for reply of three (3) months. No extensions of time under the provisions of 37 CFR 1.136(a) were obtained. Accordingly, the application became abandoned on March 21, 2007.

The petition satisfies the requirements of 37 CFR 1.137(b) in that petitioner has supplied (1) the reply in the form of an amendment, (2) the petition fee of $1540.00, and (3) a proper statement of unintentional delay.

It is not apparent whether the statement of unintentional delay was signed by a person who would have been in a position of knowing that the entire delay in filing the required reply from the due date for the reply until the filing of a grantable petition pursuant to 37 CFR 1.137(b) was unintentional. Nevertheless, in accordance with 37 CFR 10.18, the statement is accepted as constituting a certification of unintentional delay. However, in the event that petitioner has no knowledge that the delay was unintentional, petitioner must make such an inquiry to ascertain that, in fact, the delay was unintentional. If petitioner discovers that the delay was intentional, petitioner must so notify the Office.

There is no indication that the person signing the instant petition was ever given a power of attorney or authorization of agent to prosecute the above-identified application. In accordance with 37 CFR 1.34(a), the signature appearing on the petition shall constitute a representation to the United States Patent and Trademark Office that he/she is authorized to represent the particular party in whose behalf he/she acts. However, if petitioner desires to receive future correspondence regarding this application, the appropriate power of attorney or authorization of agent must be submitted. A courtesy copy of this decision is being mailed to petitioner. Nevertheless, all future correspondence regarding this application file will be directed solely to the address of record until otherwise instructed.

Telephone inquiries concerning this decision should be directed to JoAnne Burke at (571) 272-4584.

This application is being referred to Technology Center AU 2179 for appropriate action by the Examiner in the normal course of business on the reply received.

Irvin Dingle
Petitions Examiner
Office of Petitions

cc: Joseph Nguyen
ISPG PC
10121 Miller Ave. #201
Cupertino, CA 95014

UNITED STATES PATENT AND TRADEMARK OFFICE

Commissioner for Patents
United States Patent and Trademark Office
P.O. Box 1450
Alexandria, VA 22313-1450
www.uspto.gov

MAILED

NOV 05 2004

DIRECTOR'S OFFICE
TECHNOLOGY CENTER 3600

Zilka-Kotab, PC
P.O. Box 721120
San Jose, CA 95172-1120

In re application of : **DECISION ON PETITION**
John R. Abe : **TO MAKE SPECIAL**
Application No. 10/644,949 : **(ACCELERATED**
Filed: August 19, 2003 : **EXAMINATION)**
For: SYSTEM, METHOD AND COMPUTER PROGRAM PRODUCT FOR THE OPTIMIZATION OF PRICE TO SATISFY CERTAIN BUSINESS OBJECTIVES

This is in response to the petition filed on December 11, 2003, and re-filed on April 14, 2004, to make the above-identified application special on the basis of special examining procedure for certain new applications - accelerated examination as set forth in MPEP § 708.02, VIII.

The requirements for granting special status under this section are: (A) a petition to make special accompanied by the fee set forth in 37 CFR 1.17(h); (B) all claims being directed to a single invention, or an election without traverse if the Office determines that all the claims are not directed to a single invention; (C) a statement that a pre-examination search was made listing the field of search; (D) one copy of each of the references deemed most closely related to the subject matter encompassed by the claims if said references are not already of record; and (E) a detailed discussion of how the claimed subject matter is patentable over the references in accordance with 37 CFR 1.111 (b) and (c).

Since all of the requirements for special status under MPEP § 708.02, VIII have been met, the petition is **GRANTED**.

In satisfaction of item (B) above, the petitioner states that "(i)f the Office determines that all of the claims presented are not directed to single invention, then applicant will make an election without traverse as a prerequisite to the grant of special status."

The examiner is directed (1) to make an interference search for possible interfering applications, (2) to promptly examine this application out of turn, and (3) if any interfering application is discovered, to examine such application simultaneously and state in the first official letter of such application that it is being taken out of turn because of a possible interference.

Petitioner is advised that this application will continue to be special, throughout its entire prosecution and pendency, including interference or appeal, if any, only if petitioner makes a prompt ***bona fide*** effort, in response to each Office action, to place the application in condition for allowance, even if it is necessary to conduct an interview with the examiner to accomplish this purpose.

SUMMARY: Petition to Make Special **GRANTED**.

Randolph A. Reese
Special Programs Examiner
Technology Center 3600
(703) 308-2121

RAR/rwg: 10/27/04

UNITED STATES PATENT AND TRADEMARK OFFICE

Commissioner for Patents
United States Patent and Trademark Office
P.O. Box 1450
Alexandria, VA 22313-1450
www.uspto.gov

TOKYO ELECTRON U.S. HOLDINGS, INC.
4350 W. CHANDLER BLVD.
SUITE 10
CHANDLER AZ 85226

COPY MAILED

MAR 20 2008

In re Application of
Noriaki **FUKIAGE**
Application No. 10/644,958
Filed: August 21, 2003
Attorney Docket No.
071469-0304673 (RAJ-003)

DECISION ON PETITION

This is a decision on the petition under the unintentional provisions of 37 CFR 1.137(b), filed January 24, 2008, to revive the above-identified application.

The petition is **GRANTED**.

This application became abandoned for failure to timely pay the issue and publication fees on or before August 23, 2007, as required by the Notice of Allowance and Fee(s) Due, mailed May 23, 2007, which set a statutory period for reply of three (3) months. Accordingly, the date of abandonment of this application is August 24, 2007.

The petition satisfies the requirements of 37 CFR 1.137(b) in that petitioner has supplied (1) the reply in the form of payment of the issue fee of $1,440.00 and the publication fee of $300.00, (2) the petition fee of $1,540.00; and (3) a proper statement of unintentional delay. Accordingly, the Issue Fee payment is accepted as having been unintentionally delayed.

Telephone inquiries concerning this decision should be directed to Thuy Pardo at (571) 272-6052 or in her absence, the undersigned at (571)272-7099.

This application is being referred to Publishing Division for processing into a patent.

David A. Bucci
Petitions Examiner
Office of Petitions

UNITED STATES PATENT AND TRADEMARK OFFICE

UNITED STATES DEPARTMENT OF COMMERCE
United States Patent and Trademark Office
Address: COMMISSIONER FOR PATENTS
P.O. Box 1450
Alexandria, Virginia 22313-1450
www.uspto.gov

Patent Group
Microsoft Corporation
One Microsoft Way
Redmond, WA 98052

Mail Date: 04/21/2010

Applicant	: David A. Matthews	: DECISION ON REQUEST FOR
Patent Number	: 7669140	: RECALCULATION of PATENT
Issue Date	: 02/23/2010	: TERM ADJUSTMENT IN VIEW
Appliction No	: 10/644,967	: OF WYETH AND NOTICE OF INTENT TO
Filed	: 08/21/2003	: ISSUE CERTIFICATE OF CORRECTION
		:

The Request for Recalculation is **GRANTED** to the extent indicated.

The patent term adjustment has been determined to be **941** days. The USPTO will *sua sponte* issue a certificate of correction reflecting the amount of PTA days determined by the recalculation.

Prior to the issuance of the certificate of correction, the USPTO will afford patentee an opportunity to be heard and request reconsideration. Accordingly, patentee has **one month or thirty (30) days**, whichever is longer, to file a request for reconsideration of this patent term adjustment calculation. See 35 U.S.C. 154(b)(3)(B)(ii) and 37 CFR 1.322(a)(4). No extensions of time will be granted under 37 CFR 1.136.

Patentee should use document code PET.OP if electronically filing a request for reconsideration of this patent term adjustment calculation. The patentee must also include the information required by 37 CFR 1.705(b)(2) and the fee required by 37 CFR 1.18(e). If patentee does not file a timely request for reconsideration of this patent term adjustment calculation including the information required by 37 CFR 1.705(b)(2) and the fee required by 37 CFR 1.18(e), the USPTO will issue a certificate of correction reflecting the PTA determination noted above.

Patentee should be aware that in order to preserve the right to review in the United States District Court for the District of Columbia of the USPTO patent term adjustment determination, patentee must ensure that he or she also take the steps required under 35 U.S.C. 154(b)(4)(A) in a timely manner. Nothing in the request for recalculation should be construed as providing an alternative time frame for commencing a civil action under 35 U.S.C. 154(b)(4)(A).

Any questions concerning this decision should be directed to the Office of Patent Legal Administration at 571-272-7702.

UNITED STATES PATENT AND TRADEMARK OFFICE

Commissioner for Patents
United States Patent and Trademark Office
P.O. Box 1450
Alexandria, VA 22313-1450
www.uspto.gov

COPY MAILED

SEP 2 0 2007

OFFICE OF PETITIONS

WILSON SONSINI GOODRICH & ROSATI
650 PAGE MILL ROAD
PALO ALTO CA 94304-1050

In re Application of :

DALE, Roderic M.K. et al. :
Application No. 10/644,969 : DECISION ON PETITION
Filed: August 21, 2003 : TO WITHDRAW
Attorney Docket No. **09388.0003-03** : FROM RECORD
:

This is a decision on the Request to Withdraw as attorney or agent of record under 37 C.F.R. § 1.36(b), filed August 17, 2007.

The request is **APPROVED.**

A grantable request to withdraw as attorney/agent of record must be signed by every attorney/agent seeking to withdraw or contain a clear indication that one attorney is signing on behalf of another/others. A request to withdraw will not be approved unless at least 30 (thirty) days would remain between the date of approval and the later of the expiration date of a time to file a response or the expiration date of the maximum time period which can be extended under 37 C.F.R. § 1.136(a).

The request was signed by Albert Halluin on behalf of all attorneys of record who are associated.
All attorneys/agents associated have been withdrawn. Applicant is reminded that there is no attorney of record at this time.

The request to change the correspondence of record is not acceptable as the requested correspondence address is not that of: (1) the first named signing inventor; or (2) an intervening assignee of the entire interest under 37 C.F.R 3.71. All future communications from the Office will be directed to the first named signing inventor at the first copied address below until otherwise properly notified by the applicant.

There is an outstanding Office action mailed June 22, 2007 that requires a reply from the applicant.

Telephone inquiries concerning this decision should be directed to Tredelle Jackson at 571-272-2783.

Monica A. Graves
Petitions Examiner
Office of Petitions

cc: **RODERIC M.K. DALE**
26761 SW 45TH DRIVE
WILSONVILL, OR 97070

cc: **LOWENSTEIN SANDLER, PC**
65 LIVINGSTON AVEUE
ROSELAND, NJ 07068

UNITED STATES PATENT AND TRADEMARK OFFICE

Commissioner for Patents
United States Patent and Trademark Office
P.O. Box 1450
Alexandria, VA 22313-1450
www.uspto.gov

JUN 20 2006

CROWELL& MORNING, LLP
INTELLECTUAL PROPERTY GROUP
P. O. BOX 14300
WASHINGTON, DC 20044-4300

In re Application of	:
Bernd Sundermann et al	:
Serial No.: 10/644,981	: PETITION DECISION
Filed: August 21, 2003	:
Attorney Docket No.: 029310.52539	:

This is in response to the petition under 37 CFR 1.144, filed March 22, 2006, requesting withdrawal of an improper restriction requirement.

BACKGROUND

A review of the file history shows that this application was filed under 35 U.S.C. 111 and contained 36 claims, as filed. The examiner mailed to applicants on March 31, 2005, a restriction requirement, as follows:

Group I – claims 1-36, drawn to compounds of formula I where R_2 is alkyl, cycloalkyl or aryl and neither R_3 and R_4 nor R_5 and R_6 form a ring and A is heteroaryl;

Group II – claims 1-36, drawn to compounds of formula I where R_2 is alkyl, cycloalkyl or aryl and neither R_3 and R_4 nor R_5 and R_6 form a ring and A is not heteroaryl;

Group III.– claims 1-36, drawn to compounds of formula I where R_2 is heterocyclic and neither R_3 and R_4 nor $R_5$and R_6 form a ring;

Group IV – claims 1-36, drawn to compounds of formula I where R_1 and R_2 form a ring and neither R_3 and R_4 nor R_5 and R_6 form a ring;

Group V - claims 1-36, drawn to compounds of formula I where R_1 and R_2 do not form a ring and R_3 and R_4 form a ring;

Group VI - claims 1-36, drawn to compounds of formula I where R_1 and R_2 form a ring and R_3 and R_4 form a ring;

Group VII - claims 1-36, drawn to compounds of formula I where R_1 and R_2 do not form a ring and R_3 and R_4 form a heteroring (multiheteroring);

Group VIII - claims 1-36, drawn to compounds of formula I where R_1 and R_2 form a ring and R_3 and R_4 form a heteroring;

Group IX - claims 1-36, drawn to compounds of formula I where R_1 and R_2 do not form a ring and $R_5$and R_6 form a ring;

Group X - claims 1-36, drawn to compounds of formula I where R_1 and R_2 form a ring and R_5 and R_6 form a ring;

Group XI - claims 1-36, drawn to compounds of formula I where R_1 and R_2 do not form a ring and $R_5$and R_6 form a heteroring (multiheterorig); and

Group XII - claims 1-36, drawn to compounds of formula I where R_1 and R_2 form a ring and $R_5$and R_6 form a heteroring (multiheteroring).

The examiner set forth as reasons for restriction that the claims of each Group are structurally diverse and patentably distinct and one Group would not render any of the others obvious. An election of species within the Group elected was also required.

Applicants replied on May 2, 2005, electing with traverse Group IV and a species (without traverse). Applicants argued that the restriction was improper under the guidelines of *In re Weber* and M.P.E.P. 803.02 and that restriction within a claim was not permitted.

The examiner mailed a new Office action to applicants on June 21, 2005, acknowledging the election of Group IV and the traversal. The examiner maintained the requirement and made it Final on the basis of the reasons set forth in the previous Office action and that which applicants defined as the common core is too small or restrictive. The examiner also rejected claims 35-36 under 35 U.S.C. 112, first and second paragraphs, as lacking enablement and as indefinite. Claims 14-23 and 30-31 were rejected under 35 U.S.C. 102(b) as anticipated by Merla.

Applicants replied on October 21, 2005, by filing an amendment canceling claim 36, amending claims 14 and 35, and again traversing the restriction requirement for the same reasons and responding to each of the rejections of record.

The examiner mailed a Final Office action to applicants on December 22, 2005, maintaining the restriction requirement and rejecting claim 35 under 35 U.S.C. 112, first and second paragraphs, as lacking enablement and indefinite.

Applicants filed a request for reconsideration of the Final Office action on March 22, 2006, and this petition asking review of the restriction requirement. The examiner has not yet responded to the amendment after Final Office action.

DISCUSSION

Applicants' claims are directed to compounds having the structure of Formula I:

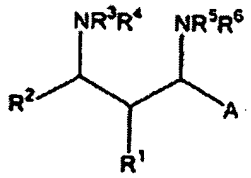

Applicants argue that the examiner has made an improper restriction requirement of the claims into twelve groups and argued that they represent different unrelated structures based on the above base structure. The examiner has done this by defining variables R_1 through R_6 and A.

A review of each of the variables shows that each may define specific alkyl, cycloalkyl, aryl and/or heteroaryl moieties. It is also possible for two variables to join together to form a ring fused to the base structure or the amino nitrogens, such as R_1 with R_2, R_3 with R_4 and R_5 with R_6, noting that the latter two rings are, of necessity, heterocyclic. The base structure applicants define as a 1,3 diamino propane compound. However, when R_1 and R_2 form a ring the compound is no longer a diamino propane, but an ortho-substituted aniline compound. Likewise, when R_3 and R_4 or R_5 and R_6 form a heteroring an N-substituted piperidine is formed. Each of these types of compounds is separately classified and bears no relationship to any others in structure or common physical properties.

Applicants argue initially that claim 1 is a proper Markush claim in that it satisfies the criteria set forth in *In re Harnish*, namely that the compounds encompassed must have a common utility and a substantial structural feature essential to that utility. Applicants argue that all compounds have utility as analgesics and that the substantial structural feature essential to the utility is the diamino propane portion of the compounds. However, as noted above, the propane portion may become part of a ring system and no longer exist as a substantial structural feature in all possible compounds (e.g. when R_1 and R_2 form a ring system incorporating a portion of the propane as part of the ring structure). It therefore cannot be considered the feature essential to utility of all compounds.

Further, where the substituted amino, either or both, form a heteroring the propane no longer is the significant structural feature, but the heteroring is the significant structural feature and controls or dictates the activity of the substituents attached to it to varying degrees.

Applicants argue that *In re Harnish* and *In re Weber* stand for the principle that applicants have a right to define their invention in the manner they choose and to have the entire invention examined. However they do not stand for the caveat, as applicants would argue, that restriction within a claim is improper. Where a Markush group encompasses multiple inventions, as here, it is proper for the examiner to require restriction between them based on the above noted principle of utility and substantial structural feature essential for that utility. Here it has been seen that what applicants' argue is the substantial structural feature does not exist in all structures and may not be the significant structural feature in all structures. Restriction is therefore justified.

A review of the examiner's restriction requirement, however, shows that it is inconsistent in some aspects and should be revisited and, if necessary, revised. The inconsistencies exist in that variable A is mentioned in only the first two Groups. As variable A has no direct effect on the essential structure, these two groups should be combined or eliminated. The remaining ten Groups are directed to where one or more of the pairs of R variables form or do not form a ring and whether that ring is heterocyclic. Essentially these can be as R_1 and R_2 – ring or no ring; R_3 and R_4 – no ring or heteroring or multiheteroring; and R_5 and R_6 – no ring or heteroring or multiheteroring. The combinations and permutations of these variables form 16 distinct Groups.

However where both substituted nitrogens form heterorings or multiheterorings, such compounds would likely fall into one group, thus reducing the number of groups to 12.

While a revised restriction requirement is not set forth herein, the examiner is encouraged to review and revise, as necessary, the restriction requirement along the lines indicated. It is noted that elected Group IV (and most of the other Groups set forth) is a proper Group within these guidelines.

DECISION

The petition is **DENIED** for the reasons set forth above.

The application will be forwarded to the examiner for consideration of the amendment after Final Office action filed March 22, 2006, and such other action as deemed appropriate.

Should there be any questions about this decision please contact William R. Dixon, Jr., by letter addressed to Director, TC 1600, at the address listed above, or by telephone at 703-308-3824 or by facsimile sent to the general Office facsimile number, 571-273-8300.

George C. Elliott
Director, Technology Center 1600

UNITED STATES PATENT AND TRADEMARK OFFICE

Commissioner for Patents
United States Patent and Trademark Office
P.O. Box 1450
Alexandria, VA 22313-1450
www.uspto.gov

SEP 17 2004

MAILED

SEP 17 2004

OFFICE OF THE DIRECTOR
TC 3600

KEVIN LYNN WILDENSTEIN
Southwest Intellectual Property Services, LLC
6700-B Jefferson
Suite 8
Albuquerque, NM 87109

In re application of : **DECISION ON PETITION**
Sue Smoot : **TO MAKE SPECIAL**
Application No. 10/644,984 : **(APPLICANT'S AGE)**
Filed: August 20, 2003 :
For: METHOD, SYSTEM AND DEVICE FOR BLOCKING SUNLIGHT

This is a decision on the petition submitted on August 26, 2003 under 37 CFR 1.102 (c) to make the above-identified application special under the accelerated examination procedure set forth in MPEP 708.02, Section IV: Applicant's Age.

The petition is **GRANTED.**

An application may be accorded special status upon the filing of a petition providing evidence showing that the applicant is at least 65 years old. Such a showing may be provided by evidence such as a birth certificate or a statement from the applicant.

The evidence submitted with the petition is a copy of a passport for Ms. Smoot indicating that she is at least 65 years of age.

The examiner is directed (1) to make an interference search for possible interfering applications, (2) to promptly examine this application out of turn, and (3) if any interfering application is discovered, to examine such application simultaneously and state in the first official letter of such application that it is being taken out of turn because of a possible interference.

Petitioner is advised that this application will continue to be special, throughout its entire prosecution and pendency, including interference or appeal, if any, only if petitioner makes a prompt ***bona fide*** effort, in response to each Office action, to place the application in condition for allowance, even if it is necessary to conduct an interview with the examiner to accomplish this purpose.

SUMMARY: Petition to Make Special **GRANTED**.

Steven N. Meyers
Special Programs Examiner
Patent Technology Center 3600
(703) 308-3868

SNM/pav: 9/15/04

UNITED STATES PATENT AND TRADEMARK OFFICE

COMMISSIONER FOR PATENTS
UNITED STATES PATENT AND TRADEMARK OFFICE
P.O. BOX 1450
ALEXANDRIA, VA 22313-1450
www.uspto.gov

Dykema Gossett PLLC
Suite 300 West
13101 Street, N.W.
Washington, DC 20005-3308

COPY MAILED

AUG 17 2005

OFFICE OF PETITIONS

In re Application of :
Jurgen Zimmermann, et. al. :
Application No. 10/644,990 : ON PETITION
Filed: August 21, 2003 :
Attorney Docket No. 66489-027-5 :

This is a decision on the petition, filed June 16, 2005, which is being treated as a request under 37 CFR 3.81(b)[1] to add the assignee's name on the Fee(s) Transmittal form PTOL-85(b) so that the Letters Patent will issue to the assignee.

The request is **DISMISSED**.

Petitioner states that the correct assignee's name is Sirona Dental Systems GmbH and that the assignee's name was unintentionally not included on the Fee(s) Transmittal form PTOL-85(b) at the time of payment of the issue fee. Accordingly, petitioner requests that the patent issue to Sirona Dental Systems GmbH.

37 CFR 3.81(b), effective June 25, 2004, reads:

> *After payment of the issue fee:* Any request for issuance of an application in the name of the assignee submitted after the date of payment of the issue fee, and any request for a patent to be corrected to state the name of the assignee, must state that the assignment was submitted for recordation as set forth in § 3.11 before issuance of the patent, and must include a request for a certificate of correction under § 1.323 of this chapter (accompanied by the fee set forth in § 1.20(a) and the processing fee set forth in § 1.17(i) of this chapter.

[1] *See* Official Gazette of June 22, 2004.

The request under 37 CFR 3.81(b) was not accompanied by a request for a certificate of correction (and fee) as required by 3.81(b). As petitioner has failed to comply with the provisions of 37 CFR 3.81(b), the request cannot be granted at this time.

A review of Office database assignment records does not reflect that an assignment to Sirona Dental Systems GmbH was ever recorded. However, petitioner states in the petition that an assignment was attached for recordation, in accordance with 37 CFR 3.28. Therefore, upon submission of a copy of the postcard receipt itemizing the assignment document as filed on June 16, 2005 and the required certificate of correction and fee, it would be appropriate for the Office to issue a certificate of correction to correct the front page of the Letters Patent to reflect that Sirona Dental Systems GmbH was the assignee of record at the time of issuance of the application into a patent. *Note also* 35 U.S.C. § 152.

In view of the above and **after issuance of this application into a patent, the Certificates of Correction Branch is instructed to issue a certificate of correction upon submission by petitioner of a request for a certificate of correction (and fee) which sets forth** Sirona Dental Systems GmbH**, as the assignee**. *No certificate of correction will be issued which sets forth an assignee other than the assignee set forth in this request. A copy of this decision* ***must*** *accompany the request for a Certificate of Correction.*

No further renewed request under 37 CFR 3.81(b) is necessary for consideration by the Office of Petitions for issuance of a certificate of correction in the name of the assignee set forth in this request, as this decision operates as an instruction to the Certificates of Correction Branch to issue the requested certificate of correction.

Alternatively, if petitioner desires to have the correct assignee data appear on the front page of the Letters Patent, petitioner may wish to consider filing a petition to withdraw the subject application from issue under 37 CFR 1.313(c)(2). The petition to withdraw from issue under 37 CFR 1.313(c)(2) must be accompanied by a request for continued examination (RCE) and submission (which may be a request under 37 CFR 3.81(b)).

Inquiries concerning this decision should be directed to the undersigned at (571) 272-3226. Any questions concerning issuance of a certificate of correction should be directed to the Certificates of Correction Branch at (703) 305-8309.

Andrea Smith
Petitions Examiner
Office of Petitions

UNITED STATES PATENT AND TRADEMARK OFFICE

Commissioner for Patents
United States Patent and Trademark Office
P.O. Box 1450
Alexandria, VA 22313-1450
www.uspto.gov

4-12-06

Patent No. : 6,950,496
Inventor(s) : J. Zimmermann
Issued : September 27, 2005
Title : SYSTEM FOR SPECIFYING A SENSOR HOLDER
Docket No. : 066489-0027

Re: Request for Certificate of Correction

Consideration has been given your request for the issuance of a certificate of correction for the above-identified patent under the provisions of 37 CFR 1.322 and/or 1.323.

Assignees' names and addresses (assignment data) printed in a patent are based *solely* on information supplied in the appropriate space for identifying the assignment data, i.e., item 3 of the Fee(s) Transmittal Form PTOL-85B. After payment of the issue fee, correction of assignment data submitted on the PTOL-85B can only be done by Certificate of Correction under 37 CFR 1.323, with a request under 37 CFR 3.81(b).

A request for a patent to be corrected to state the name of the assignee must:

A. state that the assignment was submitted for recordation as set forth in 37 CFR 3.11 before issuance of the patent;
B. include a request for a certificate of correction under 37 CFR 1.323 along with the fee set forth in 37 CFR 1.20(a); and
C. include the processing fee set forth in 37 CFR 1.17(i).

If the request is granted, Certificates of Correction Branch will be notified that a Certificate of Correction may be issued.
See Manual of Patent Examining Procedure, Section 1481.01 (Rev. 3) (Oct. 2005).

Applicant has not included items A and or C above, accordingly, the request for Certificate of Correction to add or change the assignee data is dismissed.
Any request under 37 CFR 3.81(b) should be directed to the following address or facsimile number:

By mail: Mail Stop PETITIONS
Commissioner for Patents
Post Office Box 1450
Alexandria, VA 22313-1450

By hand: Customer Service Window
Mail Stop Petitions
Randolph Building
401 Dulany Street
Alexandria, VA 22314

By fax: 571-273-8300
ATTN: Office of Petitions

If a fee (currently $100) was previously submitted for consideration of a Request for Certificate of Correction, under CFR 1.323, to correct assignment data, no additional fee is required.

In view of the foregoing, your request is hereby denied.

Eva James
For Cecelia Newman
Decisions & Certificates
of Correction Branch
(703) **308-9390 ext. 124** or (703) 305-8309

Adesh Bhargava
Dykema Gossett PPLC
1300 I Street, N.W, Suite 300 West
Washington, DC 20005

ej

UNITED STATES PATENT AND TRADEMARK OFFICE

Commissioner for Patents
United States Patent and Trademark Office
P.O. Box 1450
Alexandria, VA 22313-1450
www.uspto.gov

In re Patent No. 6926093
Issue Date: August 9,2005
Application No. 10645001
Filed: August 21,2003
Attorney Docket No. 3286W

:
:DECISION GRANTING PETITION
:UNDER 37 CFR 1.378(c)
:

This is a decision on the electronic petition, filed October 6,2009 ,under 37 CFR 1.378(c) to accept the unintentionally delayed payment of the 3.5 year maintenance fee for the above-identified patent.

The petition is **GRANTED**.

The maintenance fee is accepted, and the above-identified patent reinstated as of October 6,2009 . This decision also constitutes notice that the fee has been accepted. An electronic copy of the petition and this decision has been created as an entry in the Image File Wrapper. Nevertheless, petitioner should print and retain an independent copy.

Telephone inquiries related to this electronic decision should be directed to the Electronic Business Center at 1-866-217-9197.

PTO/SB/66 (03-09)
Approved for use through 03/31/2012. OMB 0651-0016
U.S. Patent and Trademark Office: U.S. DEPARTMENT OF COMMERCE
Under the Paperwork Reduction Act of 1995, no persons are required to respond to a collection of information unless it displays valid OMB control number.

PETITION TO ACCEPT UNINTENTIONALLY DELAYED PAYMENT OF MAINTENANCE FEE IN AN EXPIRED PATENT (37 CFR 1.378(c))

Patent Number	Issue Date (YYYY-MM-DD)	Application Number	Filing Date (YYYY-MM-DD)	Docket Number (if applicable)
6926093	2005-08-09	10645001	2003-08-21	8286W

CAUTION: Maintenance fee (and surcharge, if any) payment must correctly identify: (1) the patent number and (2) the application number of the actual U.S. application leading to issuance of that patent to ensure the fee(s) is/are associated with the correct patent. 37 CFR 1.366(c) and (d).

SMALL ENTITY

☒ Patentee claims, or has previously claimed, small entity status. See 37 CFR 1.27.

LOSS OF ENTITLEMENT TO SMALL ENTITY STATUS

☐ Patentee is no longer entitled to small entity status. See 37 CFR 1.27(g)

NOT Small Entity			Small Entity		
	Fee	Code		Fee	Code
○	3 ½ year	(1551)	◉	3 ½ year	(2551)
○	7 ½ year	(1552)	○	7 ½ year	(2552)
○	11 ½ year	(1553)	○	11 ½ year	(2553)

SURCHARGE

The surcharge required by 37 CFR 1.20(i)(2) (Fee Code 1558) must be paid as a condition of accepting unintentionally delayed payment of the maintenance fee.

MAINTENANCE FEE (37 CFR 1.20(e)-(g))

The appropriate maintenance fee must be submitted with this petition.

STATEMENT

THE UNDERSIGNED CERTIFIES THAT THE DELAY IN PAYMENT OF THE MAINTENANCE FEE TO THIS PATENT WAS UNINTENTIONAL

PETITIONER(S) REQUEST THAT THE DELAYED PAYMENT OF THE MAINTENANCE FEE BE ACCEPTED AND THE PATENT REINSTATED

THIS PORTION MUST BE COMPLETED BY THE SIGNATORY OR SIGNATORIES

37 CFR 1.378(d) states: "Any petition under this section must be signed by an attorney or agent registered to practice before the Patent and Trademark Office, or by the patentee, the assignee, or other party in interest."

I certify, in accordance with 37 CFR 1.4(d)(4) that I am

◉ An attorney or agent registered to practice before the Patent and Trademark Office

○ A sole patentee

○ A joint patentee; I certify that I am authorized to sign this submission on behalf of all the other patentees.

○ A joint patentee; all of whom are signing this e-petition

○ The assignee of record of the entire interest

Patent Practitioner			
A signature of the applicant or representative is required in accordance with 37 CFR 1.33 and 10.18. Please see 37 CFR 1.4(d) for the form of the signature			
Signature	/robert o. blinn/	Date (YYYY-MM-DD)	2009-10-06
Name	Robert O. Blinn	Registration Number	36751

This collection of information is required by 37 CFR 1.378(c). The information is required to obtain or retain a benefit by the public which is to file (and by the USPTO to process) an application. Confidentiality is governed by 35 U.S.C. 122 and 37 CFR 1.11 and 1.14. This collection is estimated to take 1 hour to complete, including gathering, preparing, and submitting the completed application form to the USPTO. Time will vary depending upon the individual case. Any comments on the amount of time you require to complete this form and/ or suggestions for reducing this burden, should be sent to the Chief Information Officer, U.S. Patent and Trademark Office, U.S. Department of Commerce, P.O. Box 1450, Alexandria, VA 22313-1450. DO NOT SEND FEES OR COMPLETED FORMS TO THIS ADDRESS. **This form can only be used when in conjunction with EFS-Web. If this form is mailed to the USPTO, it may cause delays in reinstating the patent.**

Privacy Act Statement

The Privacy Act of 1974 (P.L. 93-579) requires that you be given certain information in connection with your submission of the attached form related to a patent application or patent. Accordingly, pursuant to the requirements of the Act, please be advised that: (1) the general authority for the collection of this information is 35 U.S.C. 2(b)(2); (2) furnishing of the information solicited is voluntary; and (3) the principal purpose for which the information is used by the U.S. Patent and Trademark Office is to process and/or examine your submission related to a patent application or patent. If you do not furnish the requested information, the U.S. Patent and Trademark Office may not be able to process and/or examine your submission, which may result in termination of proceedings or abandonment of the application or expiration of the patent.

The information provided by you in this form will be subject to the following routine uses:

1. The information on this form will be treated confidentially to the extent allowed under the Freedom of Information Act (5 U.S.C. 552) and the Privacy Act (5 U.S.C. 552a). Records from this system of records may be disclosed to the Department of Justice to determine whether the Freedom of Information Act requires disclosure of these records.

2. A record from this system of records may be disclosed, as a routine use, in the course of presenting evidence to a court, magistrate, or administrative tribunal, including disclosures to opposing counsel in the course of settlement negotiations.

3. A record in this system of records may be disclosed, as a routine use, to a Member of Congress submitting a request involving an individual, to whom the record pertains, when the individual has requested assistance from the Member with respect to the subject matter of the record.

4. A record in this system of records may be disclosed, as a routine use, to a contractor of the Agency having need for the information in order to perform a contract. Recipients of information shall be required to comply with the requirements of the Privacy Act of 1974, as amended, pursuant to 5 U.S.C. 552a(m).

5. A record related to an International Application filed under the Patent Cooperation Treaty in this system of records may be disclosed, as a routine use, to the International Bureau of the World Intellectual Property Organization, pursuant to the Patent Cooperation Treaty.

6. A record in this system of records may be disclosed, as a routine use, to another federal agency for purposes of National Security review (35 U.S.C. 181) and for review pursuant to the Atomic Energy Act (42 U.S.C. 218(c)).

7. A record from this system of records may be disclosed, as a routine use, to the Administrator, General Services, or his/her designee, during an inspection of records conducted by GSA as part of that agency's responsibility to recommend improvements in records management practices and programs, under authority of 44 U.S.C. 2904 and 2906. Such disclosure shall be made in accordance with the GSA regulations governing inspection of records for this purpose, and any other relevant (i.e., GSA or Commerce) directive. Such disclosure shall not be used to make determinations about individuals.

8. A record from this system of records may be disclosed, as a routine use, to the public after either publication of the application pursuant to 35 U.S.C. 122(b) or issuance of a patent pursuant to 35 U.S.C. 151. Further, a record may be disclosed, subject to the limitations of 37 CFR 1.14, as a routine use, to the public if the record was filed in an application which became abandoned or in which the proceedings were terminated and which application is referenced by either a published application, an application open to public inspections or an issued patent.

9. A record from this system of records may be disclosed, as a routine use, to a Federal, State, or local law enforcement agency, if the USPTO becomes aware of a violation or potential violation of law or regulation.

UNITED STATES PATENT AND TRADEMARK OFFICE

COMMISSIONER FOR PATENTS
UNITED STATES PATENT AND TRADEMARK OFFICE
P.O. BOX 1450
ALEXANDRIA, VA 22313-1450
www.uspto.gov

Paper No.

Robert J. Yarborough
201 N. Jackson Street
Media, PA 19063

COPY MAILED
MAY 26 2004
OFFICE OF PETITIONS

In re Application of :
Peter Neilsen :
Application No. 10/645,019 : ON PETITION
Filed: August 21, 2003 :
Attorney Docket No. N/A :

This is a decision on the petition under 37 CFR 1.137(a), filed May 18, 2004, to revive the above-identified application.

The petition is **DISMISSED.**

Any further petition to revive must be submitted within TWO (2) MONTHS from the mail date of this decision. Extensions of time under 37 CFR 1.136(a) are permitted. The reconsideration request should include a cover letter entitled "Petition under 37 CFR 1.137." This is **not** a final agency action within the meaning of 5 U.S.C.§ 704.

A grantable petition under 37 CFR 1.137(a) must be accompanied by: (1) the required reply, unless previously filed;[1] (2) the petition fee as set forth in 37 CFR 1.17(l); (3) a showing to the satisfaction of the Commissioner that the entire delay in filing the required reply from the due date for the reply until the filing of a grantable petition pursuant to 37 CFR 1.137(a) was unavoidable; and (4) any terminal disclaimer (and fee as set forth in 37 CFR 1.20(d)) required pursuant to 37 CFR 1.137(c). The instant petition lacks item (3).

[1] In a nonprovisional application abandoned for failure to prosecute, the required reply may be met by the filing of a continuing application. In an application or patent, abandoned or lapsed for failure to pay the issue fee or any portion thereof, the required reply must be the payment of the issue fee or any outstanding balance thereof.

A "Notice of Allowance and Issue Fee Due" was mailed to applicant on January 14, 2004, setting a three-month period within which to submit payment of the issue fee. Since the issue fee was not received by the due date, the application became abandoned on April 15, 2004.

The showing of record is not sufficient to establish to the satisfaction of the Commissioner that the delay was unavoidable within the meaning of 35 U.S.C. § 151 and 37 CFR 1.137(a).

Applicant states in the instant petition, "Due to travel demands to promote the business, I failed to enter the due date for the issue fee and publication fees in my calendar at the time that I received the Notice of Allowance."

Applicant's preoccupation with other matters, which took precedence over docketing the due date for the issue fee, does not constitute unavoidable delay within the meaning of 37 CFR 1.137(a) and 35 § U.S.C. 151.

Furthermore, applicant has not shown that adequate provisions were made for the careful handling of the Office action in order to ensure a timely reply thereto.

Petitioner is strongly urged to file a petition stating that the delay was unintentional. Public Law 97-247, § 3, 96 Stat. 317 (1982), which revised patent and trademark fees, amended 35 U.S.C. § 41(a)(7) to provide for the revival of an "unintentionally" abandoned application without a showing that the delay in prosecution or in late payment of the issue fee was "unavoidable." This amendment to 35 U.S.C. § 41(a)(7) has been implemented in 37 CFR 1.137(b). An "unintentional" petition under 37 CFR 1.137(b) must be accompanied by the $665 petition fee.

The filing of a petition under 37 CFR 1.137(b) cannot be intentionally delayed and therefore must be filed promptly. A person seeking revival due to unintentional delay cannot make a statement that the delay was unintentional unless the entire delay, including the date it was discovered that the application was abandoned until the filing of the petition to revive under 37 CFR 1.137(b), was unintentional. A statement that the delay was unintentional is not appropriate if petitioner intentionally delayed the filing of a petition for revival under 37 CFR 1.137(b).

It is noted that applicant makes reference to a second inventor, namely Harold Zenitsky, in the petition. A thorough review of the application file does not show that this application was filed with two inventors. The original oath or declaration submitted upon filing, which established the inventive entity, lists Peter Nielsen as the sole inventor. If it desired for Mr. Zenitsky to be added as a second inventor, a petition under 37 CFR 1.48(a) must be submitted. See MPEP 201.03.

Further correspondence with respect to this matter should be addressed as follows:

By Mail: Mail Stop PETITION
Commissioner for Patents
Post Office Box 1450
Alexandria, VA 22313-1450

Effective December 1, 2003, the Office of Petitions can no longer receive hand-carried correspondence, or facsimile transmissions of correspondence. The centralized location for hand-carried correspondence is the Customer Window located at:

2011 South Clark Place
Crystal Plaza Two Lobby
Room 1B03
Arlington, VA 22202

The centralized facsimile number is **(703) 872-9306.**

Telephone inquiries concerning this decision should be directed to the undersigned at (703) 306-3475.

Marianne E. Morgan
Petitions Examiner
Office of Petitions
Office of the Deputy Commissioner
for Examination Policy

UNITED STATES PATENT AND TRADEMARK OFFICE

COMMISSIONER FOR PATENTS
UNITED STATES PATENT AND TRADEMARK OFFICE
P.O. BOX 1450
ALEXANDRIA, VA 22313-1450
www.uspto.gov

Robert J. Yarborough
201 N. Jackson Street
Media, PA 19063

COPY MAILED

AUG 0 2 2004

OFFICE OF PETITIONS

In re Application of :
Peter Neilsen :
Application No. 10/645,019 : ON PETITION
Filed: August 21, 2003 :
Attorney Docket No. N/A :

This is a decision on the petition under 37 CFR 1.137(b), filed June 29, 2004, to revive the above-identified application.

The petition is **GRANTED**.

Telephone inquiries concerning this decision should be directed to the undersigned at (703) 306-3475.

The application file is being referred to the Publishing Division to be processed into a patent.

Marianne E. Jenkins
Petitions Examiner
Office of Petitions
Office of the Deputy Commissioner
for Patent Examination Policy

PTO/SB/66 (03-09)
Approved for use through 03/31/2012. OMB 0651-0016
U.S. Patent and Trademark Office: U.S. DEPARTMENT OF COMMERCE
Under the Paperwork Reduction Act of 1995, no persons are required to respond to a collection of information unless it displays valid OMB control number.

PETITION TO ACCEPT UNINTENTIONALLY DELAYED PAYMENT OF MAINTENANCE FEE IN AN EXPIRED PATENT (37 CFR 1.378(c))

Patent Number	Issue Date (YYYY-MM-DD)	Application Number	Filing Date (YYYY-MM-DD)	Docket Number (if applicable)
6868694	2005-03-22	10645019	2003-08-21	Polariced001

CAUTION: Maintenance fee (and surcharge, if any) payment must correctly identify: (1) the patent number and (2) the application number of the actual U.S. application leading to issuance of that patent to ensure the fee(s) is/are associated with the correct patent. 37 CFR 1.366(c) and (d).

SMALL ENTITY

☒ Patentee claims, or has previously claimed, small entity status. See 37 CFR 1.27.

LOSS OF ENTITLEMENT TO SMALL ENTITY STATUS

☐ Patentee is no longer entitled to small entity status. See 37 CFR 1.27(g)

NOT Small Entity			Small Entity		
	Fee	Code		Fee	Code
○	3 ½ year	(1551)	◉	3 ½ year	(2551)
○	7 ½ year	(1552)	○	7 ½ year	(2552)
○	11 ½ year	(1553)	○	11 ½ year	(2553)

SURCHARGE

The surcharge required by 37 CFR 1.20(i)(2) (Fee Code 1558) must be paid as a condition of accepting unintentionally delayed payment of the maintenance fee.

MAINTENANCE FEE (37 CFR 1.20(e)-(g))

The appropriate maintenance fee must be submitted with this petition.

STATEMENT

THE UNDERSIGNED CERTIFIES THAT THE DELAY IN PAYMENT OF THE MAINTENANCE FEE TO THIS PATENT WAS UNINTENTIONAL

PETITIONER(S) REQUEST THAT THE DELAYED PAYMENT OF THE MAINTENANCE FEE BE ACCEPTED AND THE PATENT REINSTATED

THIS PORTION MUST BE COMPLETED BY THE SIGNATORY OR SIGNATORIES

37 CFR 1.378(d) states: "Any petition under this section must be signed by an attorney or agent registered to practice before the Patent and Trademark Office, or by the patentee, the assignee, or other party in interest."

I certify, in accordance with 37 CFR 1.4(d)(4) that I am

◉ An attorney or agent registered to practice before the Patent and Trademark Office

○ A sole patentee

○ A joint patentee; I certify that I am authorized to sign this submission on behalf of all the other patentees.

○ A joint patentee; all of whom are signing this e-petition

○ The assignee of record of the entire interest

Patent Practitioner			
A signature of the applicant or representative is required in accordance with 37 CFR 1.33 and 10.18. Please see 37 CFR 1.4(d) for the form of the signature			
Signature	/Robert J. Yarbrough #42241/	Date (YYYY-MM-DD)	2009-04-20
Name	Robert J. Yarbrough	Registration Number	42241

This collection of information is required by 37 CFR 1.378(c). The information is required to obtain or retain a benefit by the public which is to file (and by the USPTO to process) an application. Confidentiality is governed by 35 U.S.C. 122 and 37 CFR 1.11 and 1.14. This collection is estimated to take 1 hour to complete, including gathering, preparing, and submitting the completed application form to the USPTO. Time will vary depending upon the individual case. Any comments on the amount of time you require to complete this form and/ or suggestions for reducing this burden, should be sent to the Chief Information Officer, U.S. Patent and Trademark Office, U.S. Department of Commerce, P.O. Box 1450, Alexandria, VA 22313-1450. DO NOT SEND FEES OR COMPLETED FORMS TO THIS ADDRESS. **This form can only be used when in conjunction with EFS-Web. If this form is mailed to the USPTO, it may cause delays in reinstating the patent.**

Privacy Act Statement

The Privacy Act of 1974 (P.L. 93-579) requires that you be given certain information in connection with your submission of the attached form related to a patent application or patent. Accordingly, pursuant to the requirements of the Act, please be advised that: (1) the general authority for the collection of this information is 35 U.S.C. 2(b)(2); (2) furnishing of the information solicited is voluntary; and (3) the principal purpose for which the information is used by the U.S. Patent and Trademark Office is to process and/or examine your submission related to a patent application or patent. If you do not furnish the requested information, the U.S. Patent and Trademark Office may not be able to process and/or examine your submission, which may result in termination of proceedings or abandonment of the application or expiration of the patent.

The information provided by you in this form will be subject to the following routine uses:

1. The information on this form will be treated confidentially to the extent allowed under the Freedom of Information Act (5 U.S.C. 552) and the Privacy Act (5 U.S.C. 552a). Records from this system of records may be disclosed to the Department of Justice to determine whether the Freedom of Information Act requires disclosure of these records.

2. A record from this system of records may be disclosed, as a routine use, in the course of presenting evidence to a court, magistrate, or administrative tribunal, including disclosures to opposing counsel in the course of settlement negotiations.

3. A record in this system of records may be disclosed, as a routine use, to a Member of Congress submitting a request involving an individual, to whom the record pertains, when the individual has requested assistance from the Member with respect to the subject matter of the record.

4. A record in this system of records may be disclosed, as a routine use, to a contractor of the Agency having need for the information in order to perform a contract. Recipients of information shall be required to comply with the requirements of the Privacy Act of 1974, as amended, pursuant to 5 U.S.C. 552a(m).

5. A record related to an International Application filed under the Patent Cooperation Treaty in this system of records may be disclosed, as a routine use, to the International Bureau of the World Intellectual Property Organization, pursuant to the Patent Cooperation Treaty.

6. A record in this system of records may be disclosed, as a routine use, to another federal agency for purposes of National Security review (35 U.S.C. 181) and for review pursuant to the Atomic Energy Act (42 U.S.C. 218(c)).

7. A record from this system of records may be disclosed, as a routine use, to the Administrator, General Services, or his/her designee, during an inspection of records conducted by GSA as part of that agency's responsibility to recommend improvements in records management practices and programs, under authority of 44 U.S.C. 2904 and 2906. Such disclosure shall be made in accordance with the GSA regulations governing inspection of records for this purpose, and any other relevant (i.e., GSA or Commerce) directive. Such disclosure shall not be used to make determinations about individuals.

8. A record from this system of records may be disclosed, as a routine use, to the public after either publication of the application pursuant to 35 U.S.C. 122(b) or issuance of a patent pursuant to 35 U.S.C. 151. Further, a record may be disclosed, subject to the limitations of 37 CFR 1.14, as a routine use, to the public if the record was filed in an application which became abandoned or in which the proceedings were terminated and which application is referenced by either a published application, an application open to public inspections or an issued patent.

9. A record from this system of records may be disclosed, as a routine use, to a Federal, State, or local law enforcement agency, if the USPTO becomes aware of a violation or potential violation of law or regulation.

UNITED STATES PATENT AND TRADEMARK OFFICE

Commissioner for Patents
United States Patent and Trademark Office
P.O. Box 1450
Alexandria, VA 22313-1450
www.uspto.gov

In re Patent No. 6868694
Issue Date: March 22,2005
Application No. 10645019
Filed: August 21,2003
Attorney Docket No. Polariced001

:
:DECISION GRANTING PETITION
:UNDER 37 CFR 1.378(c)
:

This is a decision on the electronic petition, filed April 21,2009 ,under 37 CFR 1.378(c) to accept the unintentionally delayed payment of the 3.5 year maintenance fee for the above-identified patent.

The petition is **GRANTED**.

The maintenance fee is accepted, and the above-identified patent reinstated as of April 21,2009 . This decision also constitutes notice that the fee has been accepted. An electronic copy of the petition and this decision has been created as an entry in the Image File Wrapper. Nevertheless, petitioner should print and retain an independent copy.

Telephone inquiries related to this electronic decision should be directed to the Electronic Business Center at 1-866-217-9197.

UNITED STATES PATENT AND TRADEMARK OFFICE

Commissioner for Patents
United States Patent and Trademark Office
P.O. Box 1450
Alexandria, VA 22313-1450
www.uspto.gov

IBM CORP (YA)
C/O YEE & ASSOCIATES PC
P.O. BOX 802333
DALLAS TX 75380

COPY MAILED

FEB 15 2008

OFFICE OF PETITIONS

In re Application of :
JAMES M. MCARDLE :
Application No. 10/645,039 : DECISION ON PETITION
Filed: 08/21/2003 :
Attorney Docket No. AUS920030607US1 :

This is a decision on the "PETITION TO WITHDRAW HOLDING OF ABANDONMENT FINAL OFFICE ACTION NOT RECEIVED," filed January 18, 2008, which is being treated as a petition under 37 CFR 1.181 (no fee).

The petition is **GRANTED**.

This application was held abandoned for failure to reply to the final Office action mailed May 21, 2007, which set a three (3) month shortened statutory period for reply. A Notice of Abandonment was mailed on January 8, 2008.

Petitioner asserts that the final Office action dated May 21, 2007, was not received.

A review of the written record indicates no irregularity in the mailing of the final Office action, and, in the absence of any irregularity, there is a strong presumption that the final Office action was properly mailed to the practitioner at the address of record. This presumption may be overcome by a showing that the final Office action was not in fact received. In this regard, the showing required to establish the failure to receive the final Office action must consist of the following:

1. a statement from practitioner stating that the final Office action was not received by the practitioner;

2. a statement from the practitioner attesting to the fact that a search of the file jacket and docket records indicates that the final Office action was not received; and

3. a copy of the docket record where the non-received final Office action would have been entered had it been received and docketed must be attached to and referenced in the practitioner's statement.

See MPEP § 711.03(c) under subheading "Petition to Withdraw Holding of Abandonment Based on Failure to Receive Office Action," and "Withdrawing the Holding of Abandonment When Office Actions Are Not Received," 1156 Official Gazette 53 (November 16, 1993).

The petition satisfies the above-stated requirements. Accordingly, the application was not abandoned in fact.

In view of the above, the Notice of Abandonment is hereby vacated and the holding of abandonment withdrawn.

This application is being referred to the Technology Center technical support staff of Art Unit 2165 for re-mailing the final Office action of May 21, 2007. The period for reply will run from the re-mailing date of the final Office action.

Telephone inquiries regarding this decision may be directed to the undersigned at (571) 272-3211.

Christina Tartera Donnell

Christina Tartera Donnell
Senior Petitions Attorney
Office of Petitions

SPE RESPONSE FOR CERTIFICATE OF CORRECTION

Paper No.: _____

DATE : August 18, 2006

TO SPE OF : ART UNIT 2835

SUBJECT : Request for Certificate of Correction for Appl. No.: 10/645075 Patent No.: 6,965,515 B2

Please respond to this request for a certificate of correction within 7 days.

Please review the requested changes/corrections as shown in the **COCIN** document(s) in the IFW application image. No new matter should be introduced, nor should the scope or meaning of the claims be changed.

Please complete the response (see below) and forward the completed response to scanning using document code **COCX**.

Elisha Evans
Certificates of Correction Branch

703-308-9390 ext. *110*

Thank You For Your Assistance

The request for issuing the above-identified correction(s) is hereby:
Note your decision on the appropriate box.

- [x] **Approved** — **All** changes apply.
- [ ] **Approved in Part** — Specify below which changes **do not** apply.
- [ ] **Denied** — State the reasons for denial below.

Comments: _____

J N Gandhi 3/3/08
SPE

2835
Art Unit

UNITED STATES PATENT AND TRADEMARK OFFICE

Commissioner for Patents
United States Patent and Trademark Office
P.O. Box 1450
Alexandria, VA 22313-1450
www.uspto.gov

Kelley Drye & Warren, LLP
400 Altlantic Street, 13th Floor
Stamford, CT 06901

MAILED

MAR 23 2009

OFFICE OF PETITIONS

In re Application of :
Richard H. Selinfreund et al. :
Application No. 10/645,078 : DECISION ON PETITION
Filed: August 21, 2003 : TO WITHDRAW
Attorney Docket No. VTI-7013.1(CIP) : FROM RECORD
:

This is a decision on the Request to Withdraw as attorney or agent of record under 37 C.F.R. § 1.36(b), filed January 23, 2009.

The request is **APPROVED**.

A grantable request to withdraw as attorney/agent of record must be signed by every attorney/agent seeking to withdraw or contain a clear indication that one attorney is signing on behalf of another/others. A request to withdraw will not be approved unless at least 30 (thirty) days would remain between the date of approval and the later of the expiration date of a time to file a response or the expiration date of the maximum time period which can be extended under 37 C.F.R. § 1.136(a).

The request was signed by Marvin R. Wachs, on behalf of all attorneys/agents associated with customer number 47670. All attorneys/agents associated with customer number 47670 have been withdrawn.

Applicant is reminded that there is no attorney of record at this time.

The correspondence address has been changed and is copied below.

Telephone inquiries concerning this decision should be directed to Kimberly Inabinet at 571-272-4618.

Kimberly Inabinet
Petitions Examiner
Office of Petitions

cc: Verification Technologies, Inc.
25 Middlesex Turnpike, Unit 14
P.O. Box 94
Essex, CT 06426

UNITED STATES PATENT AND TRADEMARK OFFICE

UNITED STATES DEPARTMENT OF COMMERCE
United States Patent and Trademark Office
Address: COMMISSIONER FOR PATENTS
P.O. Box 1450
Alexandria, Virginia 22313-1450
www.uspto.gov

APPLICATION NUMBER	FILING OR 371(C) DATE	FIRST NAMED APPLICANT	ATTY. DOCKET NO./TITLE
10/645,078	08/21/2003	Richard H. Selinfreund	VTI-7013.1(CIP)

CONFIRMATION NO. 6941

47670
KELLEY DRYE & WARREN LLP
400 ALTLANTIC STREET , 13TH FLOOR
STAMFORD, CT 06901

POWER OF ATTORNEY NOTICE

Date Mailed: 03/23/2009

NOTICE REGARDING CHANGE OF POWER OF ATTORNEY

This is in response to the Power of Attorney filed 01/23/2009.

- The withdrawal as attorney in this application has been accepted. Future correspondence will be mailed to the new address of record. 37 CFR 1.33.

/kainabinet/

Office of Data Management, Application Assistance Unit (571) 272-4000, or (571) 272-4200, or 1-888-786-0101

UNITED STATES PATENT AND TRADEMARK OFFICE

COMMISSIONER FOR PATENTS
UNITED STATES PATENT AND TRADEMARK OFFICE
P.O. BOX 1450
ALEXANDRIA, VA 22313-1450
www.uspto.gov

Anthony J. Janiuk, Esq.
Waters Coporation
Legal Department
34 Maple Street
Milford, MA 01757

COPY MAILED

JAN 2 8 2005

OFFICE OF PETITIONS

In re Application of :
Joseph A. Luongo, et al. :
Application No. 10/645,082 : ON PETITION
Filed: August 21, 2003 :
Attorney Docket No. WAA-266 C1 :

This is a decision on the petition under 37 CFR 1.137(b), filed November 5, 2004, to revive the above-identified application.

The petition is **GRANTED**.

Telephone inquiries concerning this decision should be directed to the undersigned at (571) 272-3223.

The application file is being referred to the Office of Initial Patent Examination for further processing.

Marianne E. Jenkins
Petitions Examiner
Office of Petitions
Office of the Deputy Commissioner
for Patent Examination Policy

#3

UNITED STATES PATENT AND TRADEMARK OFFICE

COMMISSIONER FOR PATENTS
UNITED STATES PATENT AND TRADEMARK OFFICE
WASHINGTON, D.C. 20231
www.uspto.gov

25 AUG 2003

FOLEY & LARDNER
3000 K Street, NW, Suite 500
Washington, D.C. 20007-5109

In re Application of:
FUKISHIMA, Naoshi, et al.
U.S. Application No.: 10/645,085
Filing Date: 17 October 2002
Attorney's Docket No.: 065678/0107
For: AGONIST ANTIBODIES

DECISION

This decision is issued in response to applicants' "Petition Under 37 CFR 1.182 And Accompanying Request For Continuation-In- Part Application" filed 24 January 2003 in related U.S. national stage application 10/257,864. Applicants have paid the required petition fee.

BACKGROUND

On 17 April 2001, applicants filed international application PCT/JP01/03288 which designated the United States and claimed a priority date of 17 April 2000. On 25 October 2001, a copy of the international application was transmitted by the International Bureau (IB) to the USPTO.

A Demand electing the United States was filed priority to the expiration of nineteen months from the priority date. Accordingly, the deadline for submitting the basic national fee was thirty months from the priority date, i.e., 17 October 2002.

On 17 October 2002, applicants filed materials to initiate a U.S. national stage of international application PCT/JP01/03288. The transmittal letter included with the submission was titled "Transmittal Letter For A PCT International Application Entering The National Stage In The U.S. As A Designated Or Elected Office Under 35 U.S.C. 371." The Transmittal Letter was accompanied by, among other materials, payment of the basic national fee, a translation of the international application into English, and a Preliminary Amendment. Among the amendments contained in the Preliminary Amendment was the deletion of pages 1-51 of the sequence listing, to be replaced with pages 1-57 of a substitute sequence listing attached thereto. The Preliminary Amendment stated that the substitute sheets contained no new matter. This submission was assigned application number 10/257,864.

On 24 December 2002, the DO/EO/US mailed a Notification Of Missing Requirements indicating that an oath or declaration in compliance with 37 CFR 1.497, the surcharge for filing the declaration later than thirty months after the priority date, additional claims fees and sequence materials were required.

The petition herein included the required petition fee. It was filed with a copy of the complete disclosure required to complete the application, that is, the specification, claims, drawings, and preliminary amendment which contain the disclosure from the international application and the added subject matter. And it was accompanied by a transmittal letter for the continuation-in-part application which noted that the required filing fee for the continuation-in-part application will be submitted in response to the Notice To File Missing Parts Of The Application. These materials provide all the requirements for a grantable petition.

The materials submitted with the petition will be treated as a continuation-in-part application, assigned U.S. Application number 10/645,085. Application Number 10/257,864 will continue to be processed as a national stage under 35 U.S.C. 371 (it is noted that such case will become abandoned based on the failure to file materials responsive to the Notification Of Missing Requirements mailed 24 December 2002.

Any period of adjustment to the term of a patent under 35 U.S.C. 154(b)(May 29 2000) in either application number 10/257,864 or 10/645,085 may be reduced by the period of time beginning on the filing date accorded under 35 U.S.C. 111 and ending on the mailing date of this decision.

CONCLUSION

Applicants' petition under 37 CFR 1.182 is **GRANTED**.

The papers attached to the petition, originally filed on 17 October 2002, will be treated as a separate U.S. application filed under 35 U.S.C. 111(a) as a continuation-in-part of international application PCT/JP01/03288. This application will be assigned application number 10/645,085 and will be assigned a filing date of 17 October 2002.

The papers relating to application number 10/645,085 are being forwarded to the Office Of Initial Patent Examination for further processing in accord with this decision.

Leonard Smith
PCT Legal Examiner
PCT Legal Office

RMR/LS:rmr

Richard M. Ross
PCT Petitions Attorney
PCT Legal Office
Telephone: (703) 308-6155
Facsimile: (703) 308-6459

On 24 January 2003, applicants filed materials including the "Petition Under 37 CFR 1.182 And Accompanying Request For Continuation-In- Part Application" considered herein, a Second Preliminary Amendment, sequence materials, and a "Continuing Patent Application Transmittal Letter. The petition and accompanying materials note that the materials filed 17 October 2002 mistakenly contained additional matter to that disclosed in the international application; the petition therefore seeks to create a continuation-in-part application which includes the additional matter contained in the 17 October 2002 submission and which has a filing date of 17 October 2002 with respect to this added subject matter.

DISCUSSION

Any intended filing of an international application as a national stage application must clearly and unambiguously be identified as such and must satisfy all of the conditions set forth in 35 U.S.C. 371(c). See 37 CFR 1.494(f):

> The documents and fees submitted ... must be clearly identified as a submission to enter the national stage under 35 U.S.C. 371, otherwise the submission will be considered as being made under 35 U.S.C. 111.

In addition, section 1893.03(a) of the MPEP states that:

> If there are any conflicting instructions as to whether the filing is under 35 U.S.C. 111(a) or 35 U.S.C. 371, the application will be accepted as filed under 35 U.S.C. 111(a).

As noted above, applicants' original Transmittal Letter, filed 17 October 2002, specifically identified the accompanying submission as a submission to enter the national stage under 35 U.S.C. 371. No contradictory instructions were submitted. Accordingly, application 10/257,864 was appropriately created as a national stage application under 35 U.S.C. 371.

However, despite the statement in the Preliminary Amendment filed 17 October 2002 that no new matter was included in the amendment, the present petition states that the 17 October 2002 submission did include "the disclosure from international application PCT/JP01/03288 as well as additional matter." Specifically, the petition states that "[t]he additional matter is SEQ ID NOS. 73-84, which appear on pages 51-57 of the Sequence Listing filed with the application filing papers filed on October 17, 2002." Subject matter beyond that disclosed in the international application cannot be entered in a national stage filing under 35 U.S.C. 371. Thus, in order for the additional subject matter included with the 17 October 2002 submission to be granted a 17 October 2002 filing date, applicants must submit a grantable petition seeking to have the disclosure of 17 October 2002 treated as a continuation-in-part application under 35 U.S.C. 111(a).

DO NOT SCAN! **Please forward case and paper to address shown below.**

SPE RESPONSE FOR CERTIFICATE OF CORRECTION

Paper No.: _____

DATE : 5-15-08

TO SPE OF : ART UNIT 2854

SUBJECT : Request for Certificate of Correction for Appl. No.: 10/645106 Patent No.: 6912955

Please respond to this request for a certificate of correction within 7 days.

Should claims be approved

Please review the requested changes/corrections as shown in the attached certificate of correction. Please complete this form (see below) and forward it with the file to:

Certificates of Correction Branch (CofC)
South Tower - 9A22
Palm Location 7580

Emma Young
Certificates of Correction Branch
703-308-9390 ext. 117

Thank You For Your Assistance

The request for issuing the above-identified correction(s) is hereby:

Note your decision on the appropriate box.

- ☐ Approved — All changes apply.
- ☐ Approved in Part — Specify below which changes do not apply.
- ☐ Denied — State the reasons for denial below.

Comments: _____

SPE RESPONSE FOR CERTIFICATE OF CORRECTION

Paper No.: _____

DATE : 5-29-08

TO SPE OF : ART UNIT 2854

SUBJECT : Request for Certificate of Correction for Appl. No.: 10/645,166 Patent No.: 6912,955

Please respond to this request for a certificate of correction within 7 days.

Please review the requested changes/corrections as shown in the **COCIN** document(s) in the IFW application image. No new matter should be introduced, nor should the scope or meaning of the claims be changed.

Please check claims

Please complete the response (see below) and forward the completed response to scanning using document code **COCX**.

Ennis Ward

Certificates of Correction Branch

703-308-9390 ext. 117

Thank You For Your Assistance

The request for issuing the above-identified correction(s) is hereby:

Note your decision on the appropriate box.

☐ Approved	All changes apply.
☐ Approved in Part	Specify below which changes do not apply.
☒ Denied	State the reasons for denial below.

Comments: not of clerical nature, not of typographical nature, or not of minor character; the correction involves changes which would require reexamination. Judy Nguyen

JUDY NGUYEN
SUPERVISORY PATENT EXAMINER

SPE

2854
Art Unit

UNITED STATES
PATENT AND
TRADEMARK OFFICE

Commissioner for Patents
Washington, DC 20231
www.uspto.gov

10/29/03

Bromberg and Sunstein LLP
125 Summer Street
Boston MA 02110-1618

Dear Applicant:

The Box PGPub replacement drawings for application number 10/645,161 received on 9/30/03 by the U. S. Patent and Trademark Office will be included for patent publication.

Telephone inquiries should be directed to Customer Service, Office of Initial Patent Examination, at 703-308-1202.

UNITED STATES
PATENT AND
TRADEMARK OFFICE

Commissioner for Patents
Washington, DC 20231
www.uspto.gov

Signature of Reviewer, Office of Initial Patent Examination

UNITED STATES PATENT AND TRADEMARK OFFICE

Commissioner for Patents
United States Patent and Trademark Office
P.O. Box 1450
Alexandria, VA 22313-1450
www.uspto.gov

CHA & REITER, LLC
210 ROUTE 4 EAST STE 103
PARAMUS NJ 07652

COPY MAILED

JUL 30 2007

OFFICE OF PETITIONS

In re Application of :
Kim et al. :
Application No.: 10/645189 :
Filing or 371(c) Date: 08/21/2003 :
Attorney Docket Number: :
5000-1-328 : ON PETITION

This is a decision on the "Petition Under 37 C.F.R. § 1.181 to Withdraw Notice of Abandonment", filed May 29, 2007. The petition is properly treated as a petition to withdraw the holding of abandonment.

This Petition is hereby **granted**.

The above-identified application became abandoned for failure to timely and properly reply to the non-final Office action, mailed October 18, 2006. The Office action set a three (3) month period for reply. No response having been received, the application became abandoned on January 19, 2007. The mailing of this Decision precedes the mailing of a Notice of Abandonment.

With the instant petition, Applicant has demonstrated non-receipt of the Office Action by a preponderance of the evidence[1].

The holding of abandonment is hereby withdrawn. No petition fee has been charged and none is due.

The application will be referred to Technology Center Art Unit 2613 for re-mailing of the Office action.

Telephone inquiries concerning this matter should be directed to the undersigned at (571) 272-3232.

Derek L. Woods
Attorney
Office of Petitions

[1] Office records indicate that the correspondence address was inadvertently changed by this Office for the period in question. Office records have been corrected.

UNITED STATES PATENT AND TRADEMARK OFFICE

Commissioner for Patents
United States Patent and Trademark Office
P.O. Box 1450
Alexandria, VA 22313-1450
www.uspto.gov

NORRIS MCLAUGHLIN & MARCUS, P.A.
P O BOX 1018
SOMERVILLE NJ 08876

COPY MAILED

JUL 20 2006

OFFICE OF PETITIONS

In re Application of :
Logvinov et al. :
Application No. 10/645,237 :
Filed: August 21, 2003 :
Attorney Docket No. 103880 031 US :

DECISION ON PETITION
TO WITHDRAW
FROM RECORD

This is a decision on the Request to Withdraw as attorney or agent of record under 37 C.F.R. § 1.36(b), filed June 16, 2005.

The request is **NOT APPROVED** as moot.

A review of the file record indicates that the power of attorney to the attorneys associated with Customer Number 23526 has been revoked by the assignee of the entire interest of the patent application. Accordingly, the request to withdraw under 37 C.F.R. § 1.36(b) is moot.

The application became abandoned for failure to timely reply to the Office action mailed June 1, 2005.[1]

All future communications from the Office will continue to be directed to the first below-listed address until otherwise notified by applicants.

Telephone inquires concerning this decision should be directed to Petitions Examiner Liana Chase at 571-272-3206. All other inquires concerning either the examination or status of the application should be directed to the Technology Center.

David Bucci for
Petitions Examiner
Office of Petitions

cc:

MINTZ LEVIN COHN FERRIS GLOVSKY & POPEO
666 THIRD AVENUE
NEW YORK NY 10017

MR. JAMES REEBER
ARKADOS, INC.
948 U.S. HIGHWAY #22 EAST
NORTH PLAINFIELD, NJ 07060

[1] A Petition to Revive under 37 CFR 1.137(b) was filed May 17, 2006 by the new attorneys of record. A decision is currently being rendered on said petition to revive.

UNITED STATES PATENT AND TRADEMARK OFFICE

Commissioner for Patents
United States Patent and Trademark Office
P.O. Box 1450
Alexandria, VA 22313-1450
www.uspto.gov

MINTZ LEVIN COHN FERRIS GLOVSKY & POPEO
666 THIRD AVENUE
NEW YORK NY 10017

COPY MAILED

JUL 20 2006

OFFICE OF PETITIONS

In re Application of	:	
Logvinov et al.	:	
Application No. 10/645,237	:	ON PETITION
Filed: August 21, 2003	:	
Attorney Docket No. 34585-503	:	

This is a decision on the petition under 37 C.F.R. § 1.137(b), filed May 17, 2006, to revive the above-identified application. A Supplemental Submission for the Petition to Revive was received on May 22, 2006.

The petition is **GRANTED.**

The petition satisfies the conditions for revival pursuant to the provisions of 37 CFR 1.137(b) in that (1) the reply in the form of the Issue Fee Transmittal with payment of the issue/publication fees; (2) the petition fee; and (3) the required statement of unintentional delay have been received. Accordingly, the response has been accepted as having been unintentionally delayed.

This matter is being referred to the Publishing Division for processing into a patent.

Telephone inquiries regarding this decision should be directed to the undersigned at (571) 272-3206. All other inquiries should be directed to the Publishing Division.

Liana Chase
Petitions Examiner
Office of Petitions

UNITED STATES PATENT AND TRADEMARK OFFICE

Commissioner for Patents
United States Patent and Trademark Office
P.O. Box 1450
Alexandria, VA 22313-1450
www.uspto.gov

JJGJr : 12-07

COPY MAILED

JAN 0 4 2008

OFFICE OF PETITIONS

NORRIS, MCLAUGHLIN & MARCUS
875 THIRD AVE
18TH FLOOR
NEW YORK NY 10022

In re Application of	:	
Bennett, et al.	:	
Application No. 10/645,248	:	DECISION
Filed: 20 August, 2003	:	
Attorney Docket No. 102792-158	:	

This is a decision on the petition filed on 15 December, 2005, under 37 C.F.R. §1.182.

The Office regrets the delay in addressing this matter, however, the instant petition was presented to the attorneys in the Office of Petitions only at this writing.[1]

The petition as considered under 37 C.F.R. §1.182 is **DISMISSED**.

BACKGROUND

The record reflects that:

- the instant application was filed on 20 August, 2003, and thereafter proceeded through initial application examination for formalities;

- following an improvidently mailed action (23 September, 2004) intended for another file but transmitted with the application number of the instant matter, Petitioner avers in a paper filed on 11 March, 2005, that he previously was in communication with the Examiner and received there from information as to certain future transactions, however,

[1] NOTE: Monitoring of the status of applications on PAIR can inform one's management of application responses and provide an indication when mailings of Office actions should be expected. Status Inquiries filed at three (3) or four (4) month intervals provide a demonstration of diligence and attention in supporting a petition seeking relief under 37 C.F.R. §1.181.

the record is silent as to these matters and Petitioner, as one registered to practice before the Office, is aware that all transactions before the Office are in writing;[2]

- on 12 September, 2005, Petitioner filed the instant petition seeking, *inter alia*, a new Office action or a clarification from the Office improvidently mailed action of 23 September, 2004, however, it is noted that the record reflects no action by Petitioner as to this matter following the 23 September, 2004, action other than submission of the 11 March, 2005 paper and the instant petition filed nine (9) months later;

- thereafter, the Examiner mailed a Restriction Requirement on 28 June, 2006, followed by a non-final Office action on 6 October, 2006, a final Office action on 1 June, 2007, and—after a request for continued examination (RCE)—a Notice of Non-Compliant Amendment mailed on 13 November, 2007, to which the Petitioner replied on 26 November, 2007.

The availability of applications and application papers online to applicants/practitioners who diligently associate their Customer Number with the respective application(s) now provides an applicant/practitioner on-demand information as to events/transactions in an application. Thus, now if one wishes to know the progress in and/or status of an application or the accuracy of the data therein, one need only look at the file online.

Out of an abundance of caution, Petitioners always are reminded that the filing of a petition under 37 C.F.R. §1.181 does not toll any periods that may be running any action by the Office and a petition seeking relief under the regulation must be filed within two (2) months of the act complained of (see: 37 C.F.R. §1.181(f)), and that those registered to practice and all others who make representations before the Office are reminded to inquire into the underlying facts of representations made to the Office and support averments with the appropriate documentation–since all owe to the Office the continuing duty to disclose.[3]

---

[2] The regulations at 37 C.F.R. §1.2 provide:

§1.2 Business to be transacted in writing.

All business with the Patent and Trademark Office should be transacted in writing. The personal attendance of applicants or their attorneys or agents at the Patent and Trademark Office is unnecessary. The action of the Patent and Trademark Office will be based exclusively on the written record in the Office. No attention will be paid to any alleged oral promise, stipulation, or understanding in relation to which there is disagreement or doubt.

[3] See supplement of 17 June, 1999. The Patent and Trademark Office is relying on petitioner's duty of candor and good faith and accepting a statement made by Petitioner. See Changes to Patent Practice and Procedure, 62 Fed. Reg. at 53160 and 53178, 1203 Off. Gaz. Pat. Office at 88 and 103 (responses to comments 64 and 109)(applicant obligated under 37 C.F.R. §10.18 to inquire into the underlying facts and circumstances when providing statements to the Patent and Trademark Office).

See specifically, the regulations at 37 C.F.R. §10.18.

ANALYSIS

Petitioner has sought relief under the provisions of 37 C.F.R. §1.182.[4]

However, before the instant petition was released from the technology center and forwarded to the Office of Petitions, the record is clear that the examination/prosecution activity sought by Petitioner occurred.

CONCLUSION

It appears that the issue herein is moot, and, therefore, the petition as under 37 C.F.R. §1.182 is **dismissed as moot**.

The instant application is released to Technology Center 1700 for further processing in due course.

While telephone inquiries regarding this decision may be directed to the undersigned at (571) 272-3214, it is noted that all practice before the Office is in writing (see: 37 C.F.R. §1.2[5]) and the proper authority for action on any matter in this regard are the statutes (35 U.S.C.), regulations (37 C.F.R.) and the commentary on policy (MPEP). Therefore, no telephone discussion may be controlling or considered authority for Petitioner's action(s).

John J. Gillon, Jr.
Senior Attorney
Office of Petitions

---

[4] The regulations at 37 C.F.R. §1.182 provide:

§ 1.182 Questions not specifically provided for.
All situations not specifically provided for in the regulations of this part will be decided in accordance with the merits of each situation by or under the authority of the Commissioner, subject to such other requirements as may be imposed, and such decision will be communicated to the interested parties in writing. Any petition seeking a decision under this section must be accompanied by the petition fee set forth in §1.17(h).

[5] The regulations at 37 C.F.R. §1.2 provide:

§1.2 Business to be transacted in writing.
All business with the Patent and Trademark Office should be transacted in writing. The personal attendance of applicants or their attorneys or agents at the Patent and Trademark Office is unnecessary. The action of the Patent and Trademark Office will be based exclusively on the written record in the Office. No attention will be paid to any alleged oral promise, stipulation, or understanding in relation to which there is disagreement or doubt.

UNITED STATES PATENT AND TRADEMARK OFFICE

Commissioner for Patents
United States Patent and Trademark Office
P.O. Box 1450
Alexandria, VA 22313-1450
www.uspto.gov

RG AND ASSOCIATES
1103 TWIN CREEKS
ALLEN, TX 75013

MAILED

MAY 0 8 2009

OFFICE OF PETITIONS

In re Application of :
Kailing James SU, et al :
Application No. 10/645,257 : ON PETITION
Filed: August 21, 2003 :
Attorney Docket No. 139137 :

This is a decision on the petition under the unintentional provisions of 37 CFR 1.137(b), filed March 6, 2009, to revive the above-identified application.

The petition is **DISMISSED**.

The application became abandoned for failure to timely file a reply within the meaning of 37 CFR 1.113 to the final Office action of May 2, 2008. The proposed reply required for consideration of a petition to revive must be a Notice of Appeal (and appeal fee required by 37 CFR 41.20(b)(2)), an amendment that *prima facie* places the application in condition for allowance, a Request for Continued Examination (RCE) and submission (37 CFR 1.114), or the filing of a continuing application under 37 CFR 1.53(b). *See* MPEP 711.03(c)(III)(A)(2). Since the amendment submitted does not *prima facie* place the application in condition for allowance (see attached Advisory Action), the reply required must be a Notice of Appeal (and appeal fee), RCE, or the filing of a continuing application under 37 CFR 1.53(b).

Any request for reconsideration of this decision must be submitted within TWO (2) MONTHS from the mail date of this decision. Extensions of time under 37 CFR 1.136(a) are permitted. The reconsideration request should include a cover letter entitled "Renewed Petition under 37 CFR 1.137(b)." This is **not** a final agency action within the meaning of 5 U.S.C. § 704.

Further correspondence with respect to this matter should be addressed as follows:

By Mail: Mail Stop PETITION
Commissioner for Patents
P. O. Box 1450
Alexandria, VA 22313-1450

By hand: U. S. Patent and Trademark Office
Customer Service Window, Mail Stop Petitions
Randolph Building
401 Dulany Street
Alexandria, VA 22314

The centralized facsimile number is **(571) 273-8300.**

Telephone inquiries concerning this decision should be directed to Diane Goodwyn at (571) 272-6735.

Thurman Page
Petitions Examiner
Office of Petitions

Attachment: Advisory Action

Advisory Action Before the Filing of an Appeal Brief	**Application No.** 10/645,257	**Applicant(s)** SU ET AL.	
	Examiner NITTAYA JUNTIMA	**Art Unit** 2416	

--The MAILING DATE of this communication appears on the cover sheet with the correspondence address --

THE REPLY FILED 06 March 2009 FAILS TO PLACE THIS APPLICATION IN CONDITION FOR ALLOWANCE.

1. ☒ The reply was filed after a final rejection, but prior to or on the same day as filing a Notice of Appeal. To avoid abandonment of this application, applicant must timely file one of the following replies: (1) an amendment, affidavit, or other evidence, which places the application in condition for allowance; (2) a Notice of Appeal (with appeal fee) in compliance with 37 CFR 41.31; or (3) a Request for Continued Examination (RCE) in compliance with 37 CFR 1.114. The reply must be filed within one of the following time periods:
   a) ☒ The period for reply expires *3* months from the mailing date of the final rejection.
   b) ☐ The period for reply expires on: (1) the mailing date of this Advisory Action, or (2) the date set forth in the final rejection, whichever is later. In no event, however, will the statutory period for reply expire later than SIX MONTHS from the mailing date of the final rejection.

   Examiner Note: If box 1 is checked, check either box (a) or (b). ONLY CHECK BOX (b) WHEN THE FIRST REPLY WAS FILED WITHIN TWO MONTHS OF THE FINAL REJECTION. See MPEP 706.07(f).

Extensions of time may be obtained under 37 CFR 1.136(a). The date on which the petition under 37 CFR 1.136(a) and the appropriate extension fee have been filed is the date for purposes of determining the period of extension and the corresponding amount of the fee. The appropriate extension fee under 37 CFR 1.17(a) is calculated from: (1) the expiration date of the shortened statutory period for reply originally set in the final Office action; or (2) as set forth in (b) above, if checked. Any reply received by the Office later than three months after the mailing date of the final rejection, even if timely filed, may reduce any earned patent term adjustment. See 37 CFR 1.704(b).

NOTICE OF APPEAL

2. ☐ The Notice of Appeal was filed on _____. A brief in compliance with 37 CFR 41.37 must be filed within two months of the date of filing the Notice of Appeal (37 CFR 41.37(a)), or any extension thereof (37 CFR 41.37(e)), to avoid dismissal of the appeal. Since a Notice of Appeal has been filed, any reply must be filed within the time period set forth in 37 CFR 41.37(a).

AMENDMENTS

3. ☒ The proposed amendment(s) filed after a final rejection, but prior to the date of filing a brief, will not be entered because
   (a) ☒ They raise new issues that would require further consideration and/or search (see NOTE below);
   (b) ☐ They raise the issue of new matter (see NOTE below);
   (c) ☐ They are not deemed to place the application in better form for appeal by materially reducing or simplifying the issues for appeal; and/or
   (d) ☐ They present additional claims without canceling a corresponding number of finally rejected claims.

   NOTE: *See Continuation Sheet*. (See 37 CFR 1.116 and 41.33(a)).
4. ☐ The amendments are not in compliance with 37 CFR 1.121. See attached Notice of Non-Compliant Amendment (PTOL-324).
5. ☐ Applicant's reply has overcome the following rejection(s): _____.
6. ☐ Newly proposed or amended claim(s) _____ would be allowable if submitted in a separate, timely filed amendment canceling the non-allowable claim(s).
7. ☒ For purposes of appeal, the proposed amendment(s): a) ☒ will not be entered, or b) ☐ will be entered and an explanation of how the new or amended claims would be rejected is provided below or appended.
   The status of the claim(s) is (or will be) as follows:
   Claim(s) allowed: *1-5 and 8-14*.
   Claim(s) objected to: _____.
   Claim(s) rejected: *17-22*.
   Claim(s) withdrawn from consideration: _____.

AFFIDAVIT OR OTHER EVIDENCE

8. ☐ The affidavit or other evidence filed after a final action, but before or on the date of filing a Notice of Appeal will not be entered because applicant failed to provide a showing of good and sufficient reasons why the affidavit or other evidence is necessary and was not earlier presented. See 37 CFR 1.116(e).
9. ☐ The affidavit or other evidence filed after the date of filing a Notice of Appeal, but prior to the date of filing a brief, will not be entered because the affidavit or other evidence failed to overcome all rejections under appeal and/or appellant fails to provide a showing a good and sufficient reasons why it is necessary and was not earlier presented. See 37 CFR 41.33(d)(1).
10. ☐ The affidavit or other evidence is entered. An explanation of the status of the claims after entry is below or attached.

REQUEST FOR RECONSIDERATION/OTHER

11. ☐ The request for reconsideration has been considered but does NOT place the application in condition for allowance because: _____.
12. ☐ Note the attached Information *Disclosure Statement*(s). (PTO/SB/08) Paper No(s). _____
13. ☐ Other: _____.

/Seema S. Rao/
Supervisory Patent Examiner, Art Unit 2416

/Nittaya Juntima/
Examiner, Art Unit 2416

Continuation of 3. NOTE: The deletion and addition of limitations in claim 17 raise new issues.

UNITED STATES PATENT AND TRADEMARK OFFICE

Commissioner for Patents
United States Patent and Trademark Office
P.O. Box 1450
Alexandria, VA 22313-1450
www.uspto.gov

COPY MAILED

NOV 0 5 2009

OFFICE OF PETITIONS

RG AND ASSOCIATES
1103 TWIN CREEKS
ALLEN TX 75013

In re Application of :
Kailing James SU, et al :
Application No. 10/645,257 : ON PETITION
Filed: August 21, 2003 :
Attorney Docket No. 139137 :

This is a decision on the renewed petition under the unintentional provisions of 37 CFR 1.137(b), filed July 2, 2009, to revive the above-identified application.

The petition is **GRANTED**.

The application became abandoned for failure to timely file a reply within the meaning of 37 CFR 1.113 to the final Office action of May 2, 2008. The proposed reply required for consideration of a petition to revive must be a Notice of Appeal (and appeal fee required by 37 CFR 41.20(b)(2), an amendment that *prima facie* places the application in condition for allowance, a Request for Continued Examination and submission (37 CFR 1.114), or the filing of a continuing application under 37 CFR 1.53(b). See MPEP 711.03(c)(II)(A)(2). An extension of time for one (1) month pursuant to the provisions of 37 CFR 1.136(a) was obtained. Accordingly, the date of abandonment of this application is September 3, 2008.

The petition satisfies the requirements of 37 CFR 1.137(b) in that petitioner has supplied (1) the reply in the form of a Request for Continued Examination (RCE) and fee of $810, and the submission required by 37 CFR 1.114; (2) the petition fee of $1620; and (3) the required statement of unintentional delay have been received.

Telephone inquiries concerning this decision should be directed to the undersigned at (571) 272-6735.

This application is being referred to Technology Center 2416 for further processing in the normal course of business.

/Diane C. Goodwyn/
Petitions Examiner
Office of Petitions

UNITED STATES PATENT AND TRADEMARK OFFICE

Commissioner for Patents
United States Patent and Trademark Office
P.O. Box 1450
Alexandria, VA 22313-1450
www.uspto.gov

WOODCOCK WASHBURN LLP
ONE LIBERTY PLACE, 46TH FLOOR
1650 MARKET STREET
PHILADELPHIA, PA 19103

COPY MAILED

NOV 19 2004

OFFICE OF PETITIONS

In re Application of :
Carpenter, et al. :
Application No. 10/645,272 : ON PETITION
Filed: August 21, 2003 :
Attorney Docket No. PH-7108 (BMS-2301) :

This is a decision on papers filed on December 8, 2003, which is being treated as a petition under 37 CFR 1.53, requesting that the above-identified application be accorded a filing date of August 21, 2003, including page 56 of the specification. The file was recently forwarded to this office for consideration of the petition.

The application was submitted on August 21, 2003. However, on November 20, 2003, the Office of Initial Patent Examination (OIPE) mailed a "Notice To File Corrected Application Papers" (Notice) that stated the application had been accorded a filing date, and that page 56 of the specification appears to have been omitted.

In response, on December 8, 2003, the instant petition and a copy of the specification were filed. Petitioner argues that page 56 of the specification was filed on August 21, 2003.

"Applicant asserts that the items indicated as omitted were in fact deposited with the P.T.O. with the original application as indicated on the attached copy of the Application Transmittal Letter, page 2 "[X] A copy of the specification including claims and abstract (pages 1-205) and drawings and appendixes (if any) of earlier Application No. 09/783,249 filed February 14, 2001, to which no new matter has been added. Such earlier application is hereby incorporated into the present application by reference." papers filed on August 21, 2003."

In support, petitioner states a copy of the original Application Transmittal Letter is attached. This attachment cannot be located in the application file. However, the original Application Transmittal Letter, filed August 21, 2003, is found in the application file and shall be used instead.

Petitioners argument is not persuasive. The Patent and Trademark Office (Office) file is the official record of the papers originally filed in this application. A review of the official file reveals two-hundred-four (204) pages of specification, claims and abstract were filed on August 21, 2003. Page 56 of the specification was not filed on August 21, 2003, since no such page is present in the file. An applicant alleging that a paper was filed in the Office and later misplaced has the burden of proving the allegation by a preponderance of the evidence. The Application Transmittal Letter is not more probative than the official file record of what was actually received on August 21, 2003, which does not contain page 56 of the specification.

The Office has a well established and well publicized practice of providing a receipt for papers filed in the Office to any applicant desiring a receipt. The practice requires that any paper for which a receipt is desired be filed in the Office with a self-addressed postcard identifying the paper. A postcard receipt which itemizes and properly identifies the papers which are being filed serves as prima facie evidence of receipt in the Office of all the items listed thereon on the date stamped thereon by the Office. See MPEP 503.

However, based on petitioners' representation, and as noted in the Application Transmittal Letter, that the specification supplied with the petition is a part of the disclosure of application No. 09/738,249 and the entire disclosure of application 09/783,249 was specifically incorporated by reference in the present application on August 21, 2003, it appears that page 56 of the specification was present in the Office on August 21, 2003, albeit in the file of another application, i.e., application No. 09/783,249. Therefore, on petition, the application may be accorded the requested filing date, including page 56 of the specification.

The petition is granted.

Please note, the petition fee will not be refunded, since the petition was required to accord the application the requested filing date with page 56 of the specification.

Of course, the primary examiner is expected to compare the copy of page 56 of the specification supplied on December 8, 2003, to the disclosure of prior application No. 09/783,249 in order to verify that the copy of page 56 of the specification is, in fact, part of the disclosure of the prior application.

The application is being returned to the Office of Initial Patent Examination for further processing with a filing date of August 21, 2003, using the copy of page 56 of the specification supplied on December 3, 2003.

Telephone inquiries should be directed to the undersigned at (571)272-3228.

Edward J. Tannouse
Petitions Attorney
Office of Petitions
United States Patent and Trademark Office

UNITED STATES PATENT AND TRADEMARK OFFICE

Commissioner for Patents
United States Patent and Trademark Office
P.O. Box 1450
Alexandria, VA 22313-1450
www.uspto.gov

WORKMAN NYDEGGER
1000 EAGLE GATE TOWER
60 EAST SOUTH TEMPLE
SALT LAKE CITY UT 84111

COPY MAILED

SEP 18 2009

OFFICE OF PETITIONS

In re Application of :
Ballinger, et al. :
Application No. 10/645,279 :
Filed: 20 August, 2003 :
Attorney Docket No. 13768.455 :

DECISION

This is a decision on the petition filed on 15 June, 2009, for revival of an application abandoned due to unintentional delay under 37 C.F.R. §1.137(b).

The petition under 37 C.F.R. §1.137(b) is **DISMISSED**.

As to the Allegations
of Unintentional Delay

The requirements of a grantable petition pursuant to 37 C.F.R. §1.137(b) are the petition and fee therefor, a reply, a proper statement of unintentional delay under the regulation, and, where applicable, a terminal disclaimer and fee. (However, it does not appear that a terminal disclaimer and fee are due here.)

Petitioners' attentions always are directed to the guidance in the Commentary at MPEP §711.03(c)(II).

BACKGROUND

The record reflects as follows:

Petitioner failed to reply timely and properly to the final Office action mailed on 12 September, 2008, with reply due under absent an extension of time on or before 12 December, 2008

On 11 December, 2008, Petitioner filed an amendment after final, which the Examiner refused to enter and Petitioner—as one registered to practice before the Office—knew was not as of right

and not a proper reply[1] if it did not *prima facie* place the application in condition for allowance, and on 7 January, 2009, the Examiner mailed an Advisory Action.

On 11 March, 2009, Petitioner filed, *inter alia*, a request and fee for extension of time, a reply in the form of a request for continued examination (RCE) and fee and a submission under the provisions of 37 C.F.R. §1.114 in the form of an amendment.

On 16 March, 2009, the Office mailed a Notice of Non-Compliant Amendment—which specified that no new time period for reply was provided if the amendment was after-final or after allowance or drawings only, but did grant a one month period for reply and permit extensions of time pursuant to 37 C.F.R. §1.136(a) if the non-compliant amendment was, *inter alia*, "a submission for request for continued examination."

It appears that the Office did not mail a Notice of Abandonment before the instant petition was filed.

On 15 June, 2009, Petitioner filed, *inter alia*, a petition pursuant to 37 C.F.R. §1.137(b), with fee, with a statement of unintentional delay and a reply in the form of an amendment, with a request and fee for extension of time (one- (1-) month) and authorization to charge Deposit Account 23-3178 for fees as required. It appears that a three- (3-) month extension of time was required to make timely the reply to the 16 March, 2009, Notice—which fee is charged in the place of the fee paid. Thus, the application was not abandoned—the petition is moot and the fee is refunded. Should Petitioner later find that the fee was not refunded, Petitioner should request a refund from the Office of Finance and provide a copy of this petition therewith.

Again, Petitioners' attentions always are directed to the guidance in the Commentary at MPEP §711.03(c)(II).

The availability of applications and application papers online to applicants/practitioners who diligently associate their Customer Number with the respective application(s) now provides an applicant/practitioner on-demand information as to events/transactions in an application.

Out of an abundance of caution, Petitioners always are reminded that those registered to practice and all others who make representations before the Office **must** inquire into the underlying facts of representations made to the Office and support averments with the appropriate documentation–since all owe to the Office the continuing duty to disclose.[2]

---

[1] A proper reply is an amendment *prima facie* placing the application in condition for allowance, a Notice of Appeal, or an RCE (with fee and submission under 37 C.F.R. §1.114). (See: MPEP §711.03(c).)

[2] See supplement of 17 June, 1999. The Patent and Trademark Office is relying on petitioner's duty of candor and good faith and accepting a statement made by Petitioner. See Changes to Patent Practice and Procedure, 62 Fed. Reg. at 53160 and 53178, 1203 Off. Gaz. Pat. Office at 88 and 103 (responses to comments 64 and 109)(applicant obligated under 37 C.F.R. §10.18 to inquire into the underlying facts and circumstances when providing statements to the Patent and Trademark Office).

STATUTES, REGULATIONS AND ANALYSIS

Congress has authorized the Commissioner to "revive an application if the delay is shown to the satisfaction of the Commissioner to have been "unavoidable." 35 U.S.C. §133 (1994).[3] The regulations at 37 C.F.R. §1.137(a) and (b) set forth the requirements for a Petitioner to revive a previously unavoidably or unintentionally, respectively, abandoned application under this congressional grant of authority.

Unintentional delays are those that do not satisfy the very strict statutory and regulatory requirements of unavoidable delay, and also, by definition, are not intentional.[4]

As to Allegations of Unintentional Delay

The requirements of a grantable petition pursuant to 37 C.F.R. §1.137(b) are the petition and fee therefor, a reply, a proper statement of unintentional delay under the regulation, and, where applicable, a terminal disclaimer and fee.

It appears that the petition pursuant to 37 C.F.R. §1.137(b) is moot.

CONCLUSION

Accordingly, the petition pursuant to 37 C.F.R. §1.137(b) is **dismissed as moot**.

The instant application is released to the Technology Center/AU 2416 for further processing in due course.

Petitioner may find it beneficial to view Private PAIR within a fortnight of the instant decision to ensure that the revival has been acknowledged by the TC/AU in response to this decision. It is noted that all inquiries with regard to that change in status need be directed to the TC/AU where that change of status must be effected—that does not occur in the Office of Petitions.

---

[3] 35 U.S.C. §133 provides:

35 U.S.C. §133 Time for prosecuting application.

Upon failure of the applicant to prosecute the application within six months after any action therein, of which notice has been given or mailed to the applicant, or within such shorter time, not less than thirty days, as fixed by the Commissioner in such action, the application shall be regarded as abandoned by the parties thereto, unless it be shown to the satisfaction of the Commissioner that such delay was unavoidable.

[4] Therefore, by example, an unintentional delay in the reply might occur if the reply and transmittal form are to be prepared for shipment by the US Postal Service, but other pressing matters distract one's attention and the mail is not timely deposited for shipment.

Telephone inquiries regarding this decision may be directed to the undersigned at (571) 272-3214—it is noted, however, that all practice before the Office is in writing (see: 37 C.F.R. §1.2[5]) and the proper authority for action on any matter in this regard are the statutes (35 U.S.C.), regulations (37 C.F.R.) and the commentary on policy (MPEP). Therefore, no telephone discussion may be controlling or considered authority for Petitioner's action(s).

/John J. Gillon, Jr./
John J. Gillon, Jr.
Senior Attorney
Office of Petitions

[5] The regulations at 37 C.F.R. §1.2 provide:

§1.2 Business to be transacted in writing.

All business with the Patent and Trademark Office should be transacted in writing. The personal attendance of applicants or their attorneys or agents at the Patent and Trademark Office is unnecessary. The action of the Patent and Trademark Office will be based exclusively on the written record in the Office. No attention will be paid to any alleged oral promise, stipulation, or understanding in relation to which there is disagreement or doubt.

UNITED STATES PATENT AND TRADEMARK OFFICE

Commissioner for Patents
United States Patent and Trademark Office
P.O. Box 1450
Alexandria, VA 22313-1450
www.uspto.gov

WORKMAN NYDEGGER
1000 EAGLE GATE TOWER
60 EAST SOUTH TEMPLE
SALT LAKE CITY UT 84111

MAILED

JUN 15 2010

OFFICE OF PETITIONS

In re Application of :
Ballinger, et al. :
Application No. 10/645,279 : DECISION
Filed: 20 August, 2003 :
Attorney Docket No. 13768.455 :

This is a decision on the petition filed on 9 March, 2010, properly considered as a petition under 37 C.F.R. §1.181 (no fee) requesting withdrawal of the holding of abandonment in the above-identified application.

The petition pursuant to 37 C.F.R. §1.181 is **GRANTED**.

As to the Request to Withdraw
the Holding of Abandonment

Petitioners always are directed to the Commentary at MPEP §711.03(c)(I) for guidance as to the proper showing and timeliness requirements for relief under 37 C.F.R. §1.181.

BACKGROUND

The multiple transactions in this matter require that more than the immediate history be considered.

The record reflects as follows:

Originally, Petitioner failed to reply timely and properly to the final Office action mailed on 12 September, 2008, with reply due under absent an extension of time on or before 12 December, 2008

On 11 December, 2008, Petitioner filed an amendment after final, which the Examiner refused to enter and Petitioner—as one registered to practice before the Office—knew was not as of right

and not a proper reply[1] if it did not *prima facie* place the application in condition for allowance, and on 7 January, 2009, the Examiner mailed an Advisory Action.

On 11 March, 2009, Petitioner filed, *inter alia*, a request and fee for extension of time, a reply in the form of a request for continued examination (RCE) and fee and a submission under the provisions of 37 C.F.R. §1.114 in the form of an amendment.

On 16 March, 2009, the Office mailed a Notice of Non-Compliant Amendment—which specified that no new time period for reply was provided if the amendment was after-final or after allowance or drawings only, but did grant a one month period for reply and permit extensions of time pursuant to 37 C.F.R. §1.136(a) if the non-compliant amendment was, *inter alia*, "a submission for request for continued examination."

It appears that the Office did not mail a Notice of Abandonment before a subsequent petition was filed.

On 15 June, 2009, Petitioner filed, *inter alia*, a petition pursuant to 37 C.F.R. §1.137(b), with fee, with a statement of unintentional delay and a reply in the form of an amendment, with a request and fee for extension of time (one- (1-) month) and authorization to charge Deposit Account 23-3178 for fees as required. It appears that a three- (3-) month extension of time was required to make timely the reply to the 16 March, 2009, Notice—which fee was charged in the place of the fee paid. (It is noted that the original application transmittal included an authorization for the charge of necessary fees through prosecution.) Thus, the application was not abandoned—the petition was moot and the fee was refunded. The petition was dismissed as moot on 18 September, 2009, and the application returned to the Technology Center/AU (TC/AU) for further processing in due course.

The TC/AU mailed a Notice of Abandonment on 17 February, 2010, citing as the reason therefor the failure of Petitioner to reply to the 16 March, 2009, Notice of Non-Compliant Amendment, and further stating that the 16 June, 2009, reply was beyond the one-month allotted for reply—but apparently not considering the properly charged request/fee for extension of time to make the reply timely.

On 9 March, 2010, Petitioner filed a petition pursuant to 37 C.F.R. §1.181 and averred, *inter alia*, that a timely reply had been filed, and provided at least a basic showing that such reply as was required was filed (with request and fee for extension of time). Petitioner has provided a showing and Office records also clearly support that showing.

Petitioners always are directed to the appropriate guidance (MPEP §711.03(c), and requested to comply with it. The guidance in the Commentary at MPEP §711.03(c)(I) provides in pertinent part:

---

[1] A proper reply is an amendment *prima facie* placing the application in condition for allowance, a Notice of Appeal, or an RCE (with fee and submission under 37 C.F.R. §1.114). (See: MPEP §711.03(c).)

***

37 C.F.R. §1.10(c) through §1.10(e) and §1.10(g) set forth procedures for petitioning the Director of the USPTO to accord a filing date to correspondence as of the date of deposit of the correspondence as "Express Mail." A petition to withdraw the holding of abandonment relying upon a timely reply placed in "Express Mail" must include an appropriate petition under 37 C.F.R. §1.10(c), (d), (e), or (g) (see MPEP §513). When a paper is shown to have been mailed to the Office using the "Express Mail" procedures, the paper must be entered in PALM with the "Express Mail" date.

Similarly, applicants may establish that a reply was filed with a postcard receipt that properly identifies the reply and provides *prima facie* evidence that the reply was timely filed. See MPEP §503. For example, if the application has been held abandoned for failure to file a reply to a first Office action, and applicant has a postcard receipt showing that an amendment was timely filed in response to the Office action, then the holding of abandonment should be withdrawn upon the filing of a petition to withdraw the holding of abandonment. When the reply is shown to have been timely filed based on a postcard receipt, the reply must be entered into PALM using the date of receipt of the reply as shown on the post card receipt.

Where a certificate of mailing under 37 C.F.R. §1.8, but not a postcard receipt, is relied upon in a petition to withdraw the holding of abandonment, see 37 C.F.R. 1.8(b) and MPEP §512. As stated in 37 C.F.R. §1.8(b)(3) the statement that attests to the previous timely mailing or transmission of the correspondence must be on a personal knowledge basis, or to the satisfaction of the Director of the USPTO. If the statement attesting to the previous timely mailing is not made by the person who signed the Certificate of Mailing (i.e., there is no personal knowledge basis), then the statement attesting to the previous timely mailing should include evidence that supports the conclusion that the correspondence was actually mailed (e.g., copies of a mailing log establishing that correspondence was mailed for that application). When the correspondence is shown to have been timely filed based on a certificate of mailing, the correspondence is entered into PALM with the actual date of receipt (i.e., the date that the duplicate copy of the papers was filed with the statement under 37 C.F.R. §1.8).

37 C.F.R. §1.8(b) also permits applicant to notify the Office of a previous mailing or transmission of correspondence and submit a statement under 37 C.F.R. §1.8(b)(3) accompanied by a duplicate copy of the correspondence when a reasonable amount of time (e.g., more than one month) has elapsed from the time of mailing or transmitting of the correspondence. Applicant does not have to wait until the application becomes abandoned before notifying the Office of the previous mailing or transmission of the correspondence. Applicant should check the private Patent Application Information Retrieval (PAIR) system for the status of the correspondence before notifying the Office. See MPEP §512. [2]

***

Out of an abundance of caution, Petitioners always are reminded that the filing of a petition under 37 C.F.R. §1.181 does not toll any periods that may be running any action by the Office and a petition seeking relief under the regulation must be filed within two (2) months of the act complained of (*see*: 37 C.F.R. §1.181(f)), and those registered to practice and all others who

[2] *See*: MPEP §711.03(c) (I)(B).

make representations before the Office **must** inquire into the underlying facts of representations made to the Office and support averments with the appropriate documentation–since all owe to the Office the continuing duty to disclose.[3]

The availability of applications and application papers online to applicants/practitioners who diligently associate their Customer Number with the respective application(s) now provides an applicant/practitioner on-demand information as to events/transactions in an application.

STATUTES, REGULATIONS

Congress has authorized the Commissioner to "revive an application if the delay is shown to the satisfaction of the Commissioner to have been "unavoidable." 35 U.S.C. §133 (1994).

Allegations as to the Request to Withdraw the Holding of Abandonment

The guidance in the Commentary at MPEP §711.03(c)(I) specifies the showing required and how it is to be made and supported.

Petitioner appears to have made the showing required.

CONCLUSION

Accordingly, the petition pursuant to 37 C.F.R. §1.181 is **granted**. And the 17 February, 2010, Notice of Abandonment is **vacated**.

The instant application is released to Technology Center/AU 2464 for further processing in due course.

Petitioner may find it beneficial to view Private PAIR within a fortnight of the instant decision to ensure that the revival has been acknowledged by the TC/AU in response to this decision. It is noted that all inquiries with regard to that change in status need be directed to the TC/AU where that change of status must be effected—that does not occur in the Office of Petitions.

[3] See supplement of 17 June, 1999. The Patent and Trademark Office is relying on Petitioner's duty of candor and good faith and accepting a statement made by Petitioner. See Changes to Patent Practice and Procedure, 62 Fed. Reg. at 53160 and 53178, 1203 Off. Gaz. Pat. Office at 88 and 103 (responses to comments 64 and 109)(applicant obligated under 37 C.F.R. §10.18 to inquire into the underlying facts and circumstances when providing statements to the Patent and Trademark Office).

Telephone inquiries regarding this decision may be directed to the undersigned at (571) 272-3214—it is noted, however, that all practice before the Office is in writing (see: 37 C.F.R. §1.2[4]) and the proper authority for action on any matter in this regard are the statutes (35 U.S.C.), regulations (37 C.F.R.) and the commentary on policy (MPEP). Therefore, no telephone discussion may be controlling or considered authority for Petitioner's action(s).

/John J. Gillon, Jr./
John J. Gillon, Jr.
Senior Attorney
Office of Petitions

[4] The regulations at 37 C.F.R. §1.2 provide:

§1.2 Business to be transacted in writing.

All business with the Patent and Trademark Office should be transacted in writing. The personal attendance of applicants or their attorneys or agents at the Patent and Trademark Office is unnecessary. The action of the Patent and Trademark Office will be based exclusively on the written record in the Office. No attention will be paid to any alleged oral promise, stipulation, or understanding in relation to which there is disagreement or doubt.

UNITED STATES PATENT AND TRADEMARK OFFICE

Commissioner for Patents
United States Patent and Trademark Office
P.O. Box 1450
Alexandria, VA 22313-1450
www.uspto.gov

RANDALL B. BATEMAN
BATEMAN IP LAW GROUP
8 EAST BROADWAY, SUITE 550
PO BOX 1319
SALT LAKE CITY UT 84110

COPY MAILED

SEP 23 2005

OFFICE OF PETITIONS

In re Application of :
Jimmy A. PARKS et al. :
Application No. 10/645,284 : DECISION ON PETITION
Filed: August 21, 2003 : UNDER 37 CFR 1.78(a)(6)
Attorney Docket No. 2370.ACTI.NP :

This is a decision on the petition under 37 CFR § 1.78(a)(6), filed May 23, 2005, to accept an unintentionally delayed claim under 35 U.S.C. § 119(e) for the benefit of the prior-filed application set forth in the first sentence of the specification.

An amendment to the first sentence of the specification following the title to correct a reference to the prior-filed application was filed April 19, 2004.

The claim for priority under 37 CFR § 1.78(a)(6) was included in the first sentence of the specification; however, the filing date given in the first sentence of the specification was incorrect. The Office correctly noted the claim for priority including the correct filing date of the provisional application, as shown by its inclusion on the filing receipt. Therefore, no petition will be required to accept a late claim for priority. This is because the application would have been scheduled for publication on the basis of the information concerning the claim submitted within the time period set forth in 37 CFR § 1.78(a)(5)(ii).

Therefore, the petition is unnecessary and is **DISMISSED AS INVOLVING A MOOT ISSUE**.

Any questions concerning this decision on petition may be directed to David Bucci at (571) 272-7099. All other inquiries concerning either the examination procedures or status of the application should be directed to the Technology Center.

This application is being forwarded to the Examiner of Technology Center AU 3641 for appropriate action on the amendment filed **April 19, 2004**, including consideration by the examiner of the claim under 35 U.S.C. § 119(e) for benefit of the prior-filed applications.

Brian Hearn
Petitions Examiner
Office of Petitions

UNITED STATES PATENT AND TRADEMARK OFFICE

UNITED STATES DEPARTMENT OF COMMERCE
United States Patent and Trademark Office
Address: COMMISSIONER FOR PATENTS
P.O. Box 1450
Alexandria, Virginia 22313-1450
www.uspto.gov

APPL NO.	FILING OR 371 (c) DATE	ART UNIT	FIL FEE REC'D	ATTY.DOCKET NO	DRAWINGS	TOT CLMS	IND CLMS
10/645,288	08/20/2003	2186	1572	501297.01	4	47	7

CONFIRMATION NO. 7179

CORRECTED FILING RECEIPT

OC000000011756522

Kimton N. Eng, Esq.
DORSEY & WHITNEY LLP
Suite 3400
1420 Fifth Avenue
Seattle, WA 98101

Date Mailed: 01/23/2004

Receipt is acknowledged of this regular Patent Application. It will be considered in its order and you will be notified as to the results of the examination. Be sure to provide the U.S. APPLICATION NUMBER, FILING DATE, NAME OF APPLICANT, and TITLE OF INVENTION when inquiring about this application. Fees transmitted by check or draft are subject to collection. Please verify the accuracy of the data presented on this receipt. **If an error is noted on this Filing Receipt, please write to the Office of Initial Patent Examination's Filing Receipt Corrections, facsimile number 703-746-9195. Please provide a copy of this Filing Receipt with the changes noted thereon. If you received a "Notice to File Missing Parts" for this application, please submit any corrections to this Filing Receipt with your reply to the Notice. When the USPTO processes the reply to the Notice, the USPTO will generate another Filing Receipt incorporating the requested corrections (if appropriate).**

Applicant(s)

Ralph James, Andover, MN;

Domestic Priority data as claimed by applicant

Foreign Applications

If Required, Foreign Filing License Granted: 11/14/2003

Projected Publication Date: 02/24/2005

Non-Publication Request: No

Early Publication Request: No

Title

Method and system for capturing and bypassing memory transactions in a hub-based memory system

Preliminary Class

LICENSE FOR FOREIGN FILING UNDER
Title 35, United States Code, Section 184
Title 37, Code of Federal Regulations, 5.11 & 5.15

GRANTED

The applicant has been granted a license under 35 U.S.C. 184, if the phrase "IF REQUIRED, FOREIGN FILING LICENSE GRANTED" followed by a date appears on this form. Such licenses are issued in all applications where the conditions for issuance of a license have been met, regardless of whether or not a license may be required as set forth in 37 CFR 5.15. The scope and limitations of this license are set forth in 37 CFR 5.15(a) unless an earlier license has been issued under 37 CFR 5.15(b). The license is subject to revocation upon written notification. The date indicated is the effective date of the license, unless an earlier license of similar scope has been granted under 37 CFR 5.13 or 5.14.

This license is to be retained by the licensee and may be used at any time on or after the effective date thereof unless it is revoked. This license is automatically transferred to any related applications(s) filed under 37 CFR 1.53(d). This license is not retroactive.

The grant of a license does not in any way lessen the responsibility of a licensee for the security of the subject matter as imposed by any Government contract or the provisions of existing laws relating to espionage and the national security or the export of technical data. Licensees should apprise themselves of current regulations especially with respect to certain countries, of other agencies, particularly the Office of Defense Trade Controls, Department of State (with respect to Arms, Munitions and Implements of War (22 CFR 121-128)); the Office of Export Administration, Department of Commerce (15 CFR 370.10 (j)); the Office of Foreign Assets Control, Department of Treasury (31 CFR Parts 500+) and the Department of Energy.

NOT GRANTED

No license under 35 U.S.C. 184 has been granted at this time, if the phrase "IF REQUIRED, FOREIGN FILING LICENSE GRANTED" DOES NOT appear on this form. Applicant may still petition for a license under 37 CFR 5.12, if a license is desired before the expiration of 6 months from the filing date of the application. If 6 months has lapsed from the filing date of this application and the licensee has not received any indication of a secrecy order under 35 U.S.C. 181, the licensee may foreign file the application pursuant to 37 CFR 5.15(b).

UNITED STATES PATENT AND TRADEMARK OFFICE

Commissioner for Patents
United States Patent and Trademark Office
P.O. Box 1450
Alexandria, VA 22313-1450
www.uspto.gov

PEPPER HAMILTON LLP
ONE MELLON CENTER
50TH FLOOR
500 GRANT ST
PITTSBURGH PA 15219

COPY MAILED

DEC 20 2004

OFFICE OF PETITIONS

In re Application of :
Stupp, et al. : DECISION ON PETITION
Application No. 10/645,304 :
Filed: August 21, 2003 :
Attorney Docket No. 126481.01001 :

This is a decision on the petition filed December 6, 2004, pursuant to 37 CFR 1.137(b), to revive the above-identified application.

The petition is **GRANTED.**

The above-identified application became abandoned for failure to timely reply to the Notice to File Missing Parts, mailed December 18, 2003. This Notice set a period for reply of two months from the mail date of the Notice to submit an executed oath or declaration (and a surcharge for its late filing), the statutory basic filing fee, replacement drawings, and a substitute computer readable form (CRF) copy of the Sequence listing and the accompanying statement. No extensions of time under the provisions of 37 CFR 1.136(a) were obtained. No reply having been received, the above-identified application became abandoned on February 19, 2004. A Notice of Abandonment was mailed on October 29, 2004.

With the instant petition, petitioner, paid the petition fee, made the proper statement of unintentional delay, and submitted the required items in response to the Notice to File Missing Parts.

The application file is being forwarded to the Office of Initial Patent Examination for pre-examination processing.

Telephone inquiries related to this decision should be directed to the undersigned at (571)272-3207.

Cliff Congo
Petitions Attorney
Office of Petitions

UNITED STATES PATENT AND TRADEMARK OFFICE

Commissioner for Patents
United States Patent and Trademark Office
Washington, D.C. 20231
www.uspto.gov

LARSON NEWMAN ABEL POLANSKY & WHITE, LLP
5914 WEST COURTYARD DRIVE
SUITE 200
AUSTIN TX 78730

COPY MAILED

OCT 21 2008

OFFICE OF PETITIONS

In re Application of :
Eugene A. Pruss et al. :
Application No. 10/645,305 : ON PETITION
Filed: August 21, 2003 :
Attorney Docket No. 1035-BN4126 :

This is a decision in response to the petition filed March 24, 2008, and supplemented August 14, 2008, under 37 CFR 1.181(b) to withdraw the holding of abandonment, in accordance with the reasoning of the decision in Delgar Inc. v. Schuyler, 172 USPQ 513.

The petition is **GRANTED**.

This application became abandoned for failure to pay the issue fee on or before December 26, 2007 as was required by the Notice of Allowance mailed September 25, 2007. This application therefore became abandoned on December 27, 2007. Accordingly, a Notice of Abandonment was mailed January 24, 2008.

The file record discloses that the Notice of Allowance was mailed to the address of record, the same address to which the Notice of Abandonment was mailed and received. However, petitioner contends that the Notice of Allowance was not received. In support, petitioner indicates that a search of the file jacket and docket records revealed that the Notice was not received and submits copies of pages from the docketing system, wherein receipt of the Notice would have been entered, had it been received, to substantiate the claim. The statement and attachments corroborate non-receipt of the Notice of Allowance.

In view of the facts set forth in the petition, it is concluded that the Notice of Allowance was never received. Accordingly, the holding of abandonment is withdrawn. No petition fee is due and none has been charged.

Since the issue fee was tendered on March 24, 2008, this matter is being referred to the Publishing Division to be processed into a Patent. All other inquiries regarding this decision may be directed to the undersigned Petitions Attorney at (571) 272-3212.

Patricia Faison-Ball
Senior Petitions Attorney
Office of Petitions

UNITED STATES PATENT AND TRADEMARK OFFICE

Commissioner for Patents
United States Patent and Trademark Office
P.O. Box 1450
Alexandria, VA 22313-1450
www.uspto.gov

MOLECULAR IMPRINTS
PO BOX 81536
AUSTIN, TX 78708-1536

COPY MAILED

JAN 29 2008

OFFICE OF PETITIONS

In re Application of	:	
Byung-Jin Choi	:	
Application No. 10/645,306	:	DECISION GRANTING PETITION
Filed: August 21, 2003	:	UNDER 37 CFR 1.313(c)(2)
Attorney Docket No. P86-28-03	:	

This is a decision on the petition under 37 CFR 1.313(c)(2), filed January 25, 2008, to withdraw the above-identified application from issue after payment of the issue fee.

The petition is **GRANTED**.

The above-identified application is withdrawn from issue for consideration of a submission under 37 CFR 1.114 (request for continued examination). *See* 37 CFR 1.313(c)(2).

Petitioner is advised that the issue fee paid on December 3, 2007 cannot be refunded. If, however, this application is again allowed, petitioner may request that it be applied towards the issue fee required by the new Notice of Allowance.[1]

Telephone inquiries regarding this decision should be directed to April Wise at (571) 272-1642.

This application is being referred to Technology Center AU 1791 for processing of the request for continued examination under 37 CFR 1.114 and for consideration of the concurrently filed information disclosure statement.

Karen Creasy
Petitions Examiner
Office of Petitions

[1] *The request to apply the issue fee to the new Notice may be satisfied by completing and returning the new Part B – Fee(s) Transmittal Form (along with any balance due at the time of submission). Petitioner is advised that the Issue Fee Transmittal Form must be completed and timely submitted to avoid abandonment of the application.*

UNITED STATES PATENT AND TRADEMARK OFFICE

Commissioner for Patents
United States Patent and Trademark Office
P.O. Box 1450
Alexandria, VA 22313-1450
www.uspto.gov

HAMILTON BROOK SMITH & REYNOLDS PC
530 VIRGINIA ROAD
P O BOX 9133
CONCORD, MA 01742-9133

COPY MAILED

FEB 15 2006

OFFICE OF PETITIONS

In re Application of :
Eugene A. Gregerson et al :
Application No. 10/645,322 : DECISION GRANTING PETITION
Filed: August 21, 2003 : UNDER 37 CFR 1.313(c)(2)
Attorney Docket No. 3349.1004-001 :

This is a decision on the petition, filed February 14, 2006, under 37 CFR 1.313(c)(2) to withdraw the above-identified application from issue after payment of the issue fee.

The petition is **GRANTED**.

The above-identified application is withdrawn from issue for consideration of a submission under 37 CFR 1.114 (request for continued examination). See 37 CFR 1.313(c)(2).

Petitioner is advised that the issue fee paid on October 31, 2005 in the above-identified application cannot be refunded. If, however, the above-identified application is again allowed, petitioner may request that it be applied towards the issue fee required by the new Notice of Allowance.[1]

Telephone inquiries should be directed to the undersigned at (571) 272-3218.

This matter is being referred to Technology Center AU 2882 for processing of the request for continued examination under 37 CFR 1.114 and for consideration of the Information Disclosure Statement.

Frances Hicks
Petitions Examiner
Office of Petitions

C:\Documents and Settings\FHicks\My Documents\470\Feb9\645322.wpd

---

[1] *The request to apply the issue fee to the new Notice may be satisfied by completing and returning the new Issue Fee Transmittal Form PTOL-85(b) (along with any balance due at the time of payment), which includes the following language thereon: "Commissioner for Patents is requested to apply the Issue Fee and Publication Fee (if any) or re-apply any previously paid issue fee to the application identified above." Petitioner is advised that, whether a fee is indicated as being due or not, the Issue Fee Transmittal Form* **must** *be completed and timely submitted to avoid abandonment. Note the language in bold text on the first page of the Notice of Allowance and Fee(s) Due (PTOL-85).*

UNITED STATES PATENT AND TRADEMARK OFFICE

Commissioner for Patents
United States Patent and Trademark Office
P.O. Box 1450
Alexandria, VA 22313-1450
www.uspto.gov

COPY MAILED

FEB 15 2006

OFFICE OF PETITIONS

HAMILTON BROOK SMITH & REYNOLDS PC
530 VIRGINIA ROAD
P O BOX 9133
CONCORD, MA 01742-9133

In re Application of :
Eugene A. Gregerson et al :
Application No. 10/645,323 : DECISION GRANTING PETITION
Filed: August 21, 2003 : UNDER 37 CFR 1.313(c)(2)
Attorney Docket No. 3349.1005-001 :

This is a decision on the petition, filed February 14, 2006, under 37 CFR 1.313(c)(2) to withdraw the above-identified application from issue after payment of the issue fee.

The petition is **GRANTED**.

The above-identified application is withdrawn from issue for consideration of a submission under 37 CFR 1.114 (request for continued examination). See 37 CFR 1.313(c)(2).

Petitioner is advised that the issue fee paid on December 12, 2005 in the above-identified application cannot be refunded. If, however, the above-identified application is again allowed, petitioner may request that it be applied towards the issue fee required by the new Notice of Allowance.[1]

Telephone inquiries should be directed to the undersigned at (571) 272-3218.

This matter is being referred to Technology Center AU 2882 for processing of the request for continued examination under 37 CFR 1.114 and for consideration of the Information Disclosure Statement.

Frances Hicks
Petitions Examiner
Office of Petitions

C:\Documents and Settings\FHicks\My Documents\470\Feb9\645323.wpd

---

[1] *The request to apply the issue fee to the new Notice may be satisfied by completing and returning the new Issue Fee Transmittal Form PTOL-85(b) (along with any balance due at the time of payment), which includes the following language thereon: "Commissioner for Patents is requested to apply the Issue Fee and Publication Fee (if any) or re-apply any previously paid issue fee to the application identified above." Petitioner is advised that, whether a fee is indicated as being due or not, the Issue Fee Transmittal Form* ***must*** *be completed and timely submitted to avoid abandonment. Note the language in bold text on the first page of the Notice of Allowance and Fee(s) Due (PTOL-85).*

UNITED STATES PATENT AND TRADEMARK OFFICE

UNITED STATES DEPARTMENT OF COMMERCE
United States Patent and Trademark Office
Address: COMMISSIONER FOR PATENTS
P.O. Box 1450
Alexandria, Virginia 22313-1450
www.uspto.gov

ALSTON & BIRD LLP
BANK OF AMERICA PLAZA
101 SOUTH TRYON STREET, SUITE 4000
CHARLOTTE, NC 28280-4000

Mail Date: 04/21/2010

Applicant	: John W.L. Ogilvie	: DECISION ON REQUEST FOR
Patent Number	: 7577604	: RECALCULATION of PATENT
Issue Date	: 08/18/2009	: TERM ADJUSTMENT IN VIEW
Appliction No	: 10/645,336	: OF WYETH AND NOTICE OF INTENT TO
Filed	: 08/21/2003	: ISSUE CERTIFICATE OF CORRECTION
		:

The Request for Recalculation is **GRANTED** to the extent indicated.

The patent term adjustment has been determined to be **1461** days. The USPTO will *sua sponte* issue a certificate of correction reflecting the amount of PTA days determined by the recalculation.

Prior to the issuance of the certificate of correction, the USPTO will afford patentee an opportunity to be heard and request reconsideration. Accordingly, patentee has **one month or thirty (30) days**, whichever is longer, to file a request for reconsideration of this patent term adjustment calculation. See 35 U.S.C. 154(b)(3)(B)(ii) and 37 CFR 1.322(a)(4). No extensions of time will be granted under 37 CFR 1.136.

Patentee should use document code PET.OP if electronically filing a request for reconsideration of this patent term adjustment calculation. The patentee must also include the information required by 37 CFR 1.705(b)(2) and the fee required by 37 CFR 1.18(e). If patentee does not file a timely request for reconsideration of this patent term adjustment calculation including the information required by 37 CFR 1.705(b)(2) and the fee required by 37 CFR 1.18(e), the USPTO will issue a certificate of correction reflecting the PTA determination noted above.

Patentee should be aware that in order to preserve the right to review in the United States District Court for the District of Columbia of the USPTO patent term adjustment determination, patentee must ensure that he or she also take the steps required under 35 U.S.C. 154(b)(4)(A) in a timely manner. Nothing in the request for recalculation should be construed as providing an alternative time frame for commencing a civil action under 35 U.S.C. 154(b)(4)(A).

Any questions concerning this decision should be directed to the Office of Patent Legal Administration at 571-272-7702.

UNITED STATES PATENT AND TRADEMARK OFFICE

Commissioner for Patents
United States Patent and Trademark Office
P.O. Box 1450
Alexandria, VA 22313-1450
www.uspto.gov

THOMAS A. O'ROURKE
BODNER & O'ROURKE, LLP
425 BROADHOLOW ROAD
MELVILLE NY 11747

COPY MAILED

FEB 11 2005

OFFICE OF PETITIONS

In re Application of :
James A. Sebastian et al :
Application No. 10/645,342 : DECISION GRANTING PETITION
Filed: August 21, 2003 : UNDER 37 CFR 1.137(b)
For: IMPROVED COMPACT DISC CASE :

This is a decision on the petition under 37 CFR 1.137(b), filed September 24, 2004, to revive the above-identified application.

The petition is **GRANTED**.

37 CFR 1.137(b)(3) requires a statement that the entire delay in filing the required reply from the due date for the reply until the filing of a grantable petition pursuant to 37 CFR 1.137(b) was unintentional. Since the statement contained in the instant petition varies from the language required by 37 CFR 1.137(b)(3), the statement contained in the instant petition is being construed as the statement required by 37 CFR 1.137(b)(3) and petitioner must notify the Office if this is **not** a correct interpretation of the statement contained in the instant petition.

The petition satisfies the conditions for revival pursuant to the provisions of 37 CFR 1.137(b) in that (1) the reply in the form of an executed declaration, four sheets of corrected drawings and the required fees; (2) the petition fee; and (3) the required statement of unintentional delay have been received. Accordingly, the reply to the Notice To File Missing Parts Of Nonprovisional Application of September 17, 2003 is accepted as having been unintentionally delayed.

Telephone inquiries concerning this decision should be directed to the undersigned at (571) 272-3208.

This matter is being referred to the Office of Initial Patent Examination.

Karen Creasy

Karen Creasy
Petitions Examiner
Office of Petitions
Office of the Deputy Commissioner
for Patent Examination Policy

UNITED STATES PATENT AND TRADEMARK OFFICE

COMMISSIONER FOR PATENTS
UNITED STATES PATENT AND TRADEMARK OFFICE
P.O. BOX 1450
ALEXANDRIA, VA 22313-1450
WWW.USPTO.GOV

Paper No.

THE LUBRIZOL CORPORATION
ATTN: DOCKET CLERK, PATENT DEPT.
29400 LAKELAND BLVD.
WICKLIFFE OH 44092

COPY MAILED

AUG 0 4 2008

In re Application of	:	
Craig D. Tipton et al.	:	
Application No. 10/645,373	:	DECISION ON PETITION
Filed: August 21, 2003	:	PURSUANT TO
Attorney Docket No.: 3202R	:	37 C.F.R. § 1.181(A)
Title: MULTIFUNCTIONAL	:	
DISPERSANTS	:	

This is a decision on the petition filed June 20, 2008, pursuant to 37 C.F.R. § 1.181(a), requesting that the holding of abandonment in the above-identified application be withdrawn.

This petition pursuant to 37 C.F.R. § 1.181(a) is **DISMISSED.**

It is noted in passing that the heading for this petition contains an incorrect filing date for this application. It will be presumed that this erroneous filing date is a typographical error.

BACKGROUND

The above-identified application became abandoned for failure to reply in a timely manner to the notice of non-compliant amendment, mailed December 5, 2007, which set a period for reply of one month. No further responses were received, and no extensions of time pursuant to Rule 1.136(a) were requested. Accordingly, the above-identified application became abandoned on January 6, 2007. A notice of abandonment was mailed on June 16, 2008.

RELEVANT PORTIONS OF THE C.F.R. AND MPEP

37 C.F.R. § 1.134 sets forth, *in toto*:

> An Office action will notify the applicant of any non-statutory or shortened statutory time period set for reply to an Office action. Unless the applicant is notified in writing that a reply is required in less than six months, a maximum period of six months is allowed.

37 C.F.R. § 1.135 sets forth, *in toto*:

> (a) If an applicant of a patent application fails to reply within the time period provided under § 1.134 and § 1.136, the application will become abandoned unless an Office action indicates otherwise.
> (b) Prosecution of an application to save it from abandonment pursuant to paragraph (a) of this section must include such complete and proper reply as the condition of the application may require. The admission of, or refusal to admit, any amendment after final rejection or any amendment not responsive to the last action, or any related proceedings, will not operate to save the application from abandonment.
> (c) When reply by the applicant is a bona fide attempt to advance the application to final action, and is substantially a complete reply to the non-final Office action, but consideration of some matter or compliance with some requirement has been inadvertently omitted, applicant may be given a new time period for reply under § 1.134 to supply the omission.

Section 711.03(c)(I)(A) of the MPEP sets forth, *in toto*:

> In *Delgar v. Schulyer*, 172 USPQ 513 (D.D.C. 1971), the court decided that the Office should mail a new Notice of Allowance in view of the evidence presented in support of the contention that the applicant's representative did not receive the original Notice of Allowance. Under the reasoning of *Delgar*, an allegation that an Office action was never received may be considered in a petition to withdraw the holding of abandonment. If adequately supported, the Office may grant the petition to withdraw the holding of abandonment and remail the Office action. That is, the reasoning of Delgar is applicable regardless of whether an application is held abandoned for failure to timely pay the issue fee (35 U.S.C. 151) or for failure to prosecute (35 U.S.C. 133).
>
> To minimize costs and burdens to practitioners and the Office, the Office has modified the showing required to establish nonreceipt of an Office action. The showing required to establish nonreceipt of an Office communication must include a statement from the practitioner describing the system used for recording an Office action received at the correspondence address of record with the USPTO. The statement should establish that the docketing system is sufficiently reliable. It is expected that the record would include, but not be limited to, the application number, attorney

docket number, the mail date of the Office action and the due date for the response.

Practitioner must state that the Office action was not received at the correspondence address of record, and that a search of the practitioner's record(s), including any file jacket or the equivalent, and the application contents, indicates that the Office action was not received. A copy of the record(s) used by the practitioner where the non-received Office action would have been entered had it been received is required.

A copy of the practitioner's record(s) required to show non-receipt of the Office action should include the master docket for the firm. That is, if a three month period for reply was set in the nonreceived Office action, a copy of the master docket report showing all replies docketed for a date three months from the mail date of the nonreceived Office action must be submitted as documentary proof of nonreceipt of the Office action. If no such master docket exists, the practitioner should so state and provide other evidence such as, but not limited to, the following: the application file jacket; incoming mail log; calendar; reminder system; or the individual docket record for the application in question.

The showing outlined above may not be sufficient if there are circumstances that point to a conclusion that the Office action may have been lost after receipt rather than a conclusion that the Office action was lost in the mail (e.g., if the practitioner has a history of not receiving Office actions).

Evidence of nonreceipt of an Office communication or action (e.g., Notice of Abandonment or an advisory action) other than that action to which reply was required to avoid abandonment would not warrant withdrawal of the holding of abandonment. Abandonment takes place by operation of law for failure to reply to an Office action or timely pay the issue fee, not by operation of the mailing of a Notice of Abandonment. See *Lorenz v. Finkl*, 333 F.2d 885, 889-90, 142 USPQ 26, 29-30 (CCPA 1964); *Krahn v. Commissioner*, 15 USPQ2d 1823, 1824 (E.D. Va 1990); *In re Application of Fischer*, 6 USPQ2d 1573, 1574 (Comm'r Pat. 1988).

ANALYSIS

With this petition, Petitioner has stated that the notice of non-compliant amendment of December 5, 2007 was not received at the correspondence address of record, and has provided two screen shots of an electronic docket system.

However, Petitioner has failed to **describe** the system used for recording an Office action received at the correspondence address of record with the USPTO. Petitioner has explained that the docket clerk maintains this system and that all mailings from the Office are "received by her for docketing," however he has not explained how this electronic docket system operates. It follows

that Petitioner has not established that this electronic docket system is **sufficiently reliable.**

Moreover, the petition is silent in regards to the performance of a **search** of Petitioner's records, including any file jacket or the equivalent, along with the application contents.

Furthermore, regarding the copy of the records used by the practitioner where the non-received Office action would have been entered had it been received, Petitioner has provided two screen shots: a listing all docket entries for this particular application, and a "screen view" of this information. The print-out which contains **the screen view is illegible,** and as such, this submission has not been considered by the undersigned.

Finally, Petitioner has neither provided a copy of the **master docket** for the firm, nor stated that no such master docket exists.

CONCLUSION

Any reply must be submitted within **TWO MONTHS** from the mail date of this decision. Extensions of time under 37 C.F.R. § 1.136(a) are permitted. The reply should include a cover letter entitled "Renewed Petition pursuant to 37 C.F.R. § 1.181(a)". This is not a final agency action within the meaning of 5 U.S.C § 704.

The renewed petition should indicate in a prominent manner that the attorney handling this matter is Paul Shanoski, and may be submitted by mail[1], hand-delivery[2], or facsimile[3]. Registered users of EFS-Web may alternatively submit a response to this decision via EFS-Web[4]. If responding by mail, Petitioner is advised not to place the undersigned's name on the envelope. Only the information that appears in the footnote should be included - adding anything else to the address will delay the delivery of the response to the undersigned.

Telephone inquiries regarding *this decision* should be directed to the undersigned at (571) 272-3225[5]. All other inquiries

---

1 Mail Stop Petition, Commissioner for Patents, United States Patent and Trademark Office, P.O. Box 1450, Alexandria, VA, 22313-1450.
2 Customer Window, Randolph Building, 401 Dulaney Street, Alexandria, VA, 22314.
3 (571) 273-8300- please note this is a central facsimile number.
4 https://sportal.uspto.gov/authenticate/authenticateuserlocalepf.html
5 Petitioner will note that all practice before the Office should be in writing, and the action of the Office will be based exclusively on the written record in the Office. See 37 C.F.R. § 1.2. As such, Petitioner is reminded that no telephone discussion may be controlling or considered authority for any of Petitioner's further action(s).

concerning examination procedures should be directed to the Technology Center.

/Paul Shanoski/
Paul Shanoski
Senior Attorney
Office of Petitions

UNITED STATES PATENT AND TRADEMARK OFFICE

COMMISSIONER FOR PATENTS
UNITED STATES PATENT AND TRADEMARK OFFICE
P.O. BOX 1450
ALEXANDRIA, VA 22313-1450
WWW.USPTO.GOV

Paper No.

THE LUBRIZOL CORPORATION
ATTN: DOCKET CLERK, PATENT DEPT.
29400 LAKELAND BLVD.
WICKLIFFE OH 44092

COPY MAILED
SEP 23 2008

In re Application of	:	
Craig D. Tipton et al.	:	
Application No. 10/645,373	:	DECISION ON RENEWED
Filed: August 21, 2003	:	PETITION PURSUANT TO
Attorney Docket No.: 3202R	:	37 C.F.R. § 1.181
Title: MULTIFUNCTIONAL DISPERSANTS	:	

This is a decision on the renewed petition filed on September 2, 2008, pursuant to 37 C.F.R. § 1.181, requesting that the holding of abandonment in the above-identified application be withdrawn.

The above-identified application became abandoned for failure to reply in a timely manner to the notice of non-compliant amendment, mailed December 5, 2007, which set a period for reply of one month. No response was received. Accordingly, the above-identified application became abandoned on January 6, 2008. A notice of abandonment was mailed on June 16, 2008.

An original petition was filed on June 20, 2008, which was dismissed in the mailing of a decision on August 4, 2008.

With this renewed petition, Petitioner has established that the relevant communication was not received from the Office.

It follows that this renewed petition pursuant to 37 C.F.R. § 1.181(a) is **GRANTED**. The holding of abandonment is hereby **WITHDRAWN**.

The Technology Center will be notified of this decision. The Technology Center's support staff will re-mail the notice of non-compliant amendment, of December 5, 2007, and will set a new period for response.

Petitioner may find it beneficial to view Private PAIR within a fortnight of the present decision to ensure that the withdrawal of the holding of abandonment has been acknowledged by the Technology Center in response to this decision. It is noted that all inquiries with regard to any failure of that change in status should be directed to the Technology Center where that change of status must be effected - **the Office of Petitions cannot effectuate a change of status.**

Telephone inquiries regarding this decision should be directed to the undersigned at (571) 272-3225.[1] All other inquiries concerning examination procedures or status of the application should be directed to the Technology Center.

/Paul Shanoski/
Paul Shanoski
Senior Attorney
Office of Petitions

1 Petitioner will note that all practice before the Office should be in writing, and the action of the Office will be based exclusively on the written record in the Office. See 37 C.F.R. § 1.2. As such, Petitioner is reminded that no telephone discussion may be controlling or considered authority for any of Petitioner's further action(s).

UNITED STATES PATENT AND TRADEMARK OFFICE

Commissioner for Patents
United States Patent and Trademark Office
P.O. Box 1450
Alexandria, VA 22313-1450
www.uspto.gov
DIW Dec-05

LAW OFFICES OF JOHN D. GUGLIOTTA, PE, ESQ.
202 DELAWARE BUILDING
137 SOUTH MAIN STREET
AKRON OH 44308

COPY MAILED

DEC 12 2005

OFFICE OF PETITIONS

In re Application of :
William Stephens : DECISION ON PETITION
Application No. 10/645,379 :
Filed: 22 August, 2003 :
Atty Docket No. 1306 :

This is a decision on the petition under 37 CFR 1.137(b),[1] filed on 13 July, 2005, to revive the above-identified application.

The petition is **DISMISSED**.

Any request for reconsideration of this decision must be submitted within TWO (2) MONTHS from the mail date of this decision. Extensions of time under 37 CFR 1.136(a) are permitted. The reconsideration request should include a cover letter entitled "Renewed Petition Under 37 CFR 1.137(b)." This is not a final agency decision.

This application became abandoned on 29 June, 2005, for failure to timely file the issue and publication fees, in response to the

[1] Effective December 1, 1997, the provisions of 37 CFR 1.137(b) now provide that where the delay in reply was unintentional, a petition may be filed to revive an abandoned application or a lapsed patent pursuant to 37 CFR 1.137(b). A grantable petition filed under the provisions of 37 CFR 1.137(b) must be accompanied by:

(1) the required reply, unless previously filed. In a nonprovisional application abandoned for failure to prosecute, the required reply may be met by the filing of a continuing application. In a nonprovisional application filed on or after June 8, 1995, and abandoned for failure to prosecute, the required reply may also be met by the filing of a request for continued examination in compliance with § 1.114. In an application or patent, abandoned or lapsed for failure to pay the issue fee or any portion thereof, the required reply must be the payment of the issue fee or any outstanding balance thereof. In an application abandoned for failure to pay the publication fee, the required reply must include payment of the publication fee.

(2) the petition fee as set forth in 37 CFR 1.17(m);

(3) a statement that the entire delay in filing the required reply from the due date for the reply until the filing of a grantable petition pursuant to 37 CFR 1.137(b) was unintentional. The Commissioner may required additional information where there is a question whether the delay was unintentional; and

(4) any terminal disclaimer (and fee as set forth in 37 CFR 1.20(d)) required pursuant to 37 CFR 1.137(c)).

Notice of Allowance and Fee(s) Due, and corrected drawings, in response to the Notice of Allowability, both mailed on 28 June, 2005. The filing of present petition precedes the mailing of Notice of Abandonment.

The petition lacks the required reply. The drawings filed with the petition on 13 July, 2005, are objected to by Draftsperson under 37 CFR 1.84 or 1.152. A copy of the Notice of Draftsperson's Patent Drawing Review is enclosed for petitioner's reference.

Petitioner should file a renewed petition accompanied by corrected drawings in compliance with 37 CFR 1.84 and 1.182.

Further correspondence with respect to this matter should be addressed as follows:

By mail: Mail Stop Petition
Commissioner for Patents
P.O. Box 1450
Alexandria, VA 22313-1450

By FAX: (571) 273-8300
Attn: Office of Petitions

By hand: Customer Service Window
Mail Stop Petition
Randolph Building
401 Dulany Street
Alexandria, VA 22314

Telephone inquiries concerning this matter may be directed to the undersigned at (571) 272-3231.

D Wood

Douglas I. Wood
Senior Petitions Attorney
Office of Petitions

Encl: Notice of Draftsperson's Patent Drawing Review

UNITED STATES PATENT AND TRADEMARK OFFICE

COMMISSIONER FOR PATENTS
UNITED STATES PATENT AND TRADEMARK OFFICE
P.O. BOX 1450
ALEXANDRIA, VA 22313-1450
www.uspto.gov
DIW Feb-06

LAW OFFICES OF JOHN D. GUGLIOTTA, PE, ESQ.
202 DELAWARE BUILDING
137 SOUTH MAIN STREET
AKRON OH 44308

COPY MAILED

FEB 0 9 2006

OFFICE OF PETITIONS

In re Application of :
William Stephens : DECISION ON PETITION
Application No. 10/645,379 :
Filed: 22 August, 2003 :
Atty Docket No. 1306 :

This is a decision on the renewed petition under 37 CFR 1.137(b),[1] filed on 19 January, 2006, to revive the above-identified application.

The petition is **GRANTED**.

This application became abandoned on 29 June, 2005, for failure to timely file the issue and publication fees, in response to the Notice of Allowance and Fee(s) Due, and corrected drawings, in response to the Notice of Allowability, both mailed on 28 March, 2005. The petition filed on 13 July, 2005, was dismissed on 12 December, 2005. The filing of present petition precedes the mailing of Notice of Abandonment.

The draftsperson has determined that the corrected drawings are acceptable.

---

[1] Effective December 1, 1997, the provisions of 37 CFR 1.137(b) now provide that where the delay in reply was unintentional, a petition may be filed to revive an abandoned application or a lapsed patent pursuant to 37 CFR 1.137(b). A grantable petition filed under the provisions of 37 CFR 1.137(b) must be accompanied by:

(1) the required reply, unless previously filed. In a nonprovisional application abandoned for failure to prosecute, the required reply may be met by the filing of a continuing application. In a nonprovisional application filed on or after June 8, 1995, and abandoned for failure to prosecute, the required reply may also be met by the filing of a request for continued examination in compliance with § 1.114. In an application or patent, abandoned or lapsed for failure to pay the issue fee or any portion thereof, the required reply must be the payment of the issue fee or any outstanding balance thereof. In an application abandoned for failure to pay the publication fee, the required reply must include payment of the publication fee.

(2) the petition fee as set forth in 37 CFR 1.17(m);

(3) a statement that the entire delay in filing the required reply from the due date for the reply until the filing of a grantable petition pursuant to 37 CFR 1.137(b) was unintentional. The Commissioner may required additional information where there is a question whether the delay was unintentional; and

(4) any terminal disclaimer (and fee as set forth in 37 CFR 1.20(d)) required pursuant to 37 CFR 1.137(c)).

The application is being forwarded to the Publishing Division for processing into a patent.

Telephone inquiries concerning this matter may be directed to the undersigned at (571) 272-3231.

Douglas I. Wood
Senior Petitions Attorney
Office of Petitions

UNITED STATES PATENT AND TRADEMARK OFFICE

COMMISSIONER FOR PATENTS
UNITED STATES PATENT AND TRADEMARK OFFICE
P.O. BOX 1450
ALEXANDRIA, VA 22313-1450
www.uspto.gov

DONALD J. RANFT
COLLEN IP
THE HOLYOKE MANHATTAN BUILDING
80 SOUTH HIGHLAND AVENUE
OSSINING, NEW YORK 10562

COPY MAILED

SEP 28 2005

OFFICE OF PETITIONS

In re Application of :
Vicente Teofilo Roldan :
Application No. 10/645,385 :
Filed: August 21, 2003 :
Attorney Docket No. 8082 :

DECISION ON PETITION
37 CFR §1.8(b) and 1.137(b)

This is a decision on the petition, filed April 19, 2005, which is being treated as a petition under 37 CFR §1.8(b) requesting withdrawal of the holding of abandonment of the above-identified application. This is also a decision on the petition under 37 CFR §1.137(b), filed May 25, 2005.

The petition under 37 CFR §1.8(b) is **GRANTED**.

The petition under 37 CFR §1.137(b) is **DISMISSED as moot** in view of the granting of the petition under 37 CFR §1.8(b).

This application was held abandoned for failure to timely reply to the Notice of Missing Parts (Notice) mailed August 2, 2004. The Notice set a two (2) month period for reply, and extensions of time were available under 37 CFR §1.136(a). A Notice of Abandonment was mailed on April 7, 2005.

Applicant asserts that a timely reply to the Notice, in the form of a Corrected Drawing Sheet, was timely filed via facsimile on September 29, 2004. In support of this assertion, Applicant provides copies of the Facsimile confirmation, Drawing Sheet and Response, which includes a Certificate of Transmission dated September 29, 2004.

In view of the foregoing, the holding of abandonment is hereby withdrawn. No petition fee has been charged for the petition treated under 37 CFR §1.8(b) and none is due. Petitioner may request in writing refund of the $750.00 petition fee filed with the petition dated May 25, 2005.

Please send all requests for refunds to the following address or fax number listed below:

Mail Stop 16
Director of the US Patent and Trademark Office
PO Box 1450
Alexandria, VA 22313-1450

To check the status of your refund request, please contact the Refund Branch Customer Service Help Desk.

Refund Branch Point of Contact

Customer Service Help Desk
Phone: 703-305-4229 Fax: 703-308-5077

Refund requests should include at a minimum, the following information:

name, address, and phone number;
patent/application/registration/serial/order number;
refund amount due;
reason/explanation of why refund is due; and
any supporting documentation.

Telephone inquiries concerning this decision should be directed to Angela Ortiz at (571) 272-6051, or in her absence, the undersigned at (571) 272-3217.

This matter is being referred to Office of Initial Patent Examination for further processing of the application.

Brian Hearn
Petitions Examiner
Office of Petitions

UNITED STATES PATENT AND TRADEMARK OFFICE

COMMISSIONER FOR PATENTS
UNITED STATES PATENT AND TRADEMARK OFFICE
P.O. BOX 1450
ALEXANDRIA, VA 22313-1450
www.uspto.gov

DONALD J. RANFT
COLLEN IP
THE HOLYOKE MANHATTAN BUILDING
80 SOUTH HIGHLAND AVENUE
OSSINING, NEW YORK 10562

COPY MAILED

OCT 0 4 2005

OFFICE OF PETITIONS

In re Application of
Vicente Teofilo Roldan
Application No. 10/645,385
Filed: August 21, 2003
Attorney Docket No. 8082

CORRECTED DECISION
ON PETITION
37 CFR §1.8(b) and 1.137(b)

This is a corrected decision on the petition, filed April 19, 2005, which is being treated as a petition under 37 CFR §1.8(b) requesting withdrawal of the holding of abandonment of the above-identified application. This is also a decision on the petition under 37 CFR §1.137(b), filed May 25, 2005.

The petition under 37 CFR §1.8(b) is **GRANTED**.

The petition under 37 CFR §1.137(b) is **DISMISSED as moot** in view of the granting of the petition under 37 CFR §1.8(b).

This application was held abandoned for failure to timely reply to the Notice of Missing Parts (Notice) mailed August 2, 2004. The Notice set a two (2) month period for reply, and extensions of time were available under 37 CFR §1.136(a). A Notice of Abandonment was mailed on April 7, 2005.

Applicant asserts that a timely reply to the Notice, in the form of a Corrected Drawing Sheet, was timely filed via facsimile on September 29, 2004. In support of this assertion, Applicant provides copies of the Facsimile confirmation, Drawing Sheet and Response, which includes a Certificate of Transmission dated September 29, 2004.

In view of the foregoing, the holding of abandonment is hereby withdrawn. No petition fee has been charged for the petition treated under 37 CFR §1.8(b) and none is due. Petitioner may request in writing refund of the $750.00 petition fee filed with the petition dated May 25, 2005.

Please send all requests for refunds to the following address or fax number listed below:

Mail Stop 16
Director of the US Patent and Trademark Office
PO Box 1450
Alexandria, VA 22313-1450

To check the status of your refund request, please contact the Refund Branch Customer Service Help Desk.

Refund Branch Point of Contact

Customer Service Help Desk
Phone: 571-272-6500 Fax: 571-273-6500

Refund requests should include at a minimum, the following information:

name, address, and phone number;
patent/application/registration/serial/order number;
refund amount due;
reason/explanation of why refund is due; and
any supporting documentation.

Telephone inquiries concerning this decision should be directed to Angela Ortiz at (571) 272-6051, or in her absence, the undersigned at (571) 272-3217.

This matter is being referred to Office of Initial Patent Examination for further processing of the application.

Frances Hicks

Brian Hearn
Petitions Examiner
Office of Petitions

UNITED STATES PATENT AND TRADEMARK OFFICE

Commissioner for Patents
United States Patent and Trademark Office
P.O. Box 1450
Alexandria, VA 22313-1450
www.uspto.gov

IBM CORPORATION
PO BOX 12195
DEPT YXSA, BLDG 002
RESEARCH TRIANGLE PARK NC 27709

COPY MAILED

AUG 1 1 2008

OFFICE OF PETITIONS

In re Application of
Alone, et al.
Application No. 10/645,402
Filed: August 21, 2003
Attorney Docket No. JP920020130US1//LEN-10-6464

ON PETITION

This is a decision on the petition, filed April 28, 2008, under 37 CFR 1.137(b) to revive the above-identified application.

The petition is **GRANTED**.

The above-identified application became abandoned for failure to timely submit a reply within three (3) months of the mailing of the July 11, 2006 final Office action. No response being received and no extensions of time under 37 CFR 1.136(a) being obtained, this application became abandoned on October 12, 2006. A Notice of Abandonment was mailed on April 9, 2007.

Applicants have submitted a request for reconsideration of previously submitted amendment in reply to the July 11, 2006 final Office action, an acceptable statement of the unintentional nature of the delay in responding to the July 11, 2006 final Office action, and the petition fee of $1,540.00.

The statement of unintentional delay was not signed by a person who would have been in a position of knowing that the delay in filing a timely response was unintentional. In the event that practitioner has no knowledge that the delay was in fact unintentional, practitioner should make a reasonable inquiry to ascertain that, in fact, the delay was unintentional. If practitioner discovers that the delay was intentional, practitioner must so notify the Office.

Anthony M. Del Zoppo, III filed the present petition. The current attorneys of record are those associated with customer number 25299. Attorney Del Zoppo is not associated with customer number 25299. Therefore, Attorney Del Zoppo is not an attorney of record and he cannot change the correspondence address of record. The April 28, 2008 Change of Correspondence Address will not be entered. A courtesy copy of this decision will be mailed to Attorney Del Zoppo.

However, all future correspondence concerning this application will be mailed to the correspondence address of record, until appropriate change of address/power of attorney documents are filed and accepted.

After the mailing of this decision the application will be forwarded to Technology Center AU 2617 for consideration of the amendment filed on April 28, 2008.

Telephone inquiries should be directed to the undersigned at (571) 272-3230.

Shirene Willis Brantley

Shirene Willis Brantley
Senior Petitions Attorney
Office of Petitions
Office of the Deputy Commissioner
for Patent Examination Policy

CC: ANTHONY M. DEL ZOPPO, III
38500 CHARDON ROAD
WILLOUGHBY HILLS OH 44094

UNITED STATES PATENT AND TRADEMARK OFFICE

Commissioner for Patents
United States Patent and Trademark Office
P.O. Box 1450
Alexandria, VA 22313-1450
www.uspto.gov

O'MELVENY & MEYERS LLP
610 NEWPORT CENTER DRIVE
17TH FLOOR
NEWPORT BEACH CA 92660

COPY MAILED

SEP 14 2005

OFFICE OF PETITIONS

In re Application of
Hon et al.
Application No. 10/645,411
Filed: August 21, 2003
Attorney Docket No.: 29290.02

DECISION ON PETITION

This is a decision on the petition under 37 CFR 1.137(b), filed August 29, 2005, to revive the above-identified application.

This above-identified application became abandoned for failure to timely file a reply to an Office Action mailed September 21, 2004. The Office Action set a one (1) month shortened statutory period for reply. No extensions of time were obtained under the provisions of 37 CFR 1.136(a). Accordingly, this application became abandoned on October 21, 2004. A Notice of Abandonment was mailed on May 4, 2005.

This petition is hereby **GRANTED**.

The Office hereby acknowledges the receipt of the Response to the Restriction and Election Requirement submitted with the instant petition.

This application is being forwarded to Technology Center 1600 for further processing.

Telephone inquiries concerning this matter should be directed to the undersigned at (571) 272-3215.

Charlema R. Grant
Petitions Attorney
Office of Petitions

UNITED STATES PATENT AND TRADEMARK OFFICE

UNITED STATES DEPARTMENT OF COMMERCE
United States Patent and Trademark Office
Address: COMMISSIONER FOR PATENTS
P.O. Box 1450
Alexandria, Virginia 22313-1450
www.uspto.gov

MEDTRONIC
Attn: Noreen Johnson - IP Legal Department
2600 Sofamor Danek Drive
MEMPHIS, TN 38132

Mail Date: 04/21/2010

Applicant	: Charles L. Branch	: DECISION ON REQUEST FOR
Patent Number	: 7625374	: RECALCULATION of PATENT
Issue Date	: 12/01/2009	: TERM ADJUSTMENT IN VIEW
Appliction No	: 10/645,413	: OF WYETH AND NOTICE OF INTENT TO
Filed	: 08/21/2003	: ISSUE CERTIFICATE OF CORRECTION
		:

The Request for Recalculation is **GRANTED** to the extent indicated.

The patent term adjustment has been determined to be **994** days. The USPTO will *sua sponte* issue a certificate of correction reflecting the amount of PTA days determined by the recalculation.

Prior to the issuance of the certificate of correction, the USPTO will afford patentee an opportunity to be heard and request reconsideration. Accordingly, patentee has **one month or thirty (30) days**, whichever is longer, to file a request for reconsideration of this patent term adjustment calculation. See 35 U.S.C. 154(b)(3)(B)(ii) and 37 CFR 1.322(a)(4). No extensions of time will be granted under 37 CFR 1.136.

Patentee should use document code PET.OP if electronically filing a request for reconsideration of this patent term adjustment calculation. The patentee must also include the information required by 37 CFR 1.705(b)(2) and the fee required by 37 CFR 1.18(e). If patentee does not file a timely request for reconsideration of this patent term adjustment calculation including the information required by 37 CFR 1.705(b)(2) and the fee required by 37 CFR 1.18(e), the USPTO will issue a certificate of correction reflecting the PTA determination noted above.

Patentee should be aware that in order to preserve the right to review in the United States District Court for the District of Columbia of the USPTO patent term adjustment determination, patentee must ensure that he or she also take the steps required under 35 U.S.C. 154(b)(4)(A) in a timely manner. Nothing in the request for recalculation should be construed as providing an alternative time frame for commencing a civil action under 35 U.S.C. 154(b)(4)(A).

Any questions concerning this decision should be directed to the Office of Patent Legal Administration at 571-272-7702.

UNITED STATES PATENT AND TRADEMARK OFFICE

OCT 23 2006

Commissioner for Patents
United States Patent and Trademark Office
P.O. Box 1450
Alexandria, VA 22313-1450
www.uspto.gov

DARBY & DARBY P.C.
805 THIRD AVENUE
NEW YORK NY 10022-7513

In re Application of	:
Michael Seul	:
Serial No.: 10/645,426	: PETITION TO MAKE SPECIAL
Filed: June 21, 2003	:
Attorney Docket No.: LEAPS-C11	:

This is a decision on the petition filed on September 18, 2006 to make the above-identified application special for accelerated examination procedure under 37 C.F.R. § 1.102(d).

The petition to make the application special is **DENIED**.

REGULATION AND PRACTICE

To be eligible for accelerated examination under 37 C.F.R. § 1.102(d) and pursuant to the "Change to Practice for Petitions in Patent Applications to Make Special and for Accelerated Examination" published in the Federal Register on June 26, 2006 (71 Fed. Reg. 36323), the following conditions must be satisfied:

1. The application must be a **newly** filed non-reissue utility or design application filed under 37 CFR 1.111(a);
2. The application, the petition and the required fees must be filed electronically using the USPTO's electronic filing system (EFS), or EFS-web; if not filed electronically, a statement asserting that EFS and EFS-web were not available during the normal business hours;
3. The application, at the time of filing, must be complete under 37 CFR 1.51 and in condition for examination;
4. The application must contain three or fewer independent claims and twenty or fewer total claims and the claims must be directed to a single invention.

The application as filed is not eligible for the accelerated examination under 37 C.F.R. § 1.102(d) because it was not a new application at the time the petition was filed and was not filed electronically.

For the above-stated reasons, the petition is denied. The application has been forwarded to the Board of Patent Appeals and Interferences or consideration of the Appeal.

Any inquiry regarding this decision should be directed to William R. Dixon, Jr., Special Program Examiner, at (571) 272-0519.

William R. Dixon, Jr.
Special Program Examiner
Technology Center 5000

UNITED STATES PATENT AND TRADEMARK OFFICE

COMMISSIONER FOR PATENTS
UNITED STATES PATENT AND TRADEMARK OFFICE
P.O. BOX 1450
ALEXANDRIA, VA 22313-1450
www.uspto.gov

ROHM AND HAAS COMPANY
PATENT DEPARTMENT
100 INDEPENDENCE MALL WEST
PHILADELPHIA PA 19106-2399

COPY MAILED

NOV 2 1 2007

OFFICE OF PETITIONS

In re Application of :
Richard M. Jacobson, et al. :
Application No. 10/645,431 : ON PETITION
Filed: August 21, 2003 :
Attorney Docket No. A01187A :

This is a decision on the petition under 37 CFR 1.137(b), filed July 18, 2007, to revive the above-identified application.

The petition is **GRANTED**.

The application became abandoned for failure to timely file a reply within the meaning of 37 CFR 1.113 to the final Office action of January 8, 2007. This decision precedes the mailing of a Notice of Abandonment. On July 18, 2007, the present petition was filed. The proposed reply required for consideration of a petition to revive must be a Notice of Appeal (and appeal fee required by 37 CFR 41.20(b)(2), an amendment that *prima facie* places the application in condition for allowance, a Request for Continued Examination and submission (37 CFR 1.114), or the filing of a continuing application under 37 CFR 1.53(b). See MPEP 711.03(c)(II)(A)(2).

The petition satisfies the requirements of 37 CFR 1.137(b) in that petitioner has supplied (1) the reply in the form of a Request for Continued Examination (RCE), including the fee of $790 and the submission required by 37 CFR 1.114; (2) the petition fee of $1,500; and (3) an adequate statement of unintentional delay.

The application is being referred to Technology Center AU 1616 for processing of the RCE and for appropriate action by the Examiner in the normal course of business on the amendment submitted in accordance with 37 CFR 1.114.

Telephone inquiries concerning this decision should be directed to the undersigned at (571) 272-3204. Inquiries relating to further prosecution should be directed to the Technology Center.

Sherry D. Brinkley
Petitions Examiner
Office of Petitions

UNITED STATES PATENT AND TRADEMARK OFFICE

Commissioner for Patents
United States Patent and Trademark Office
P.O. Box 1450
Alexandria, VA 22313-1450
www.uspto.gov

MAILED
FROM DIRECTORS OFFICE

JAN 26 2005

TECHNOLOGY CENTER 3600

Procopio, Cory, Hargreaves & Savitch , LLP
530 B Street, Suite 2100
San Diego, CA 92101

In re application of : **DECISION ON PETITION**
Arthur F. Woodrow : **TO MAKE SPECIAL**
Application No. 10/645,449 : **(APPLICANT'S AGE)**
Filed: August 21, 2003 :
For: FILING CABINET DEVICES AND METHOD OF USE

This is a decision on the petition submitted on August 21, 2003 under 37 CFR 1.102 (c) to make the above-identified application special under the accelerated examination procedure set forth in MPEP 708.02, Section IV: Applicant's Age.

The petition is **GRANTED**.

An application may be accorded special status upon the filing of a petition providing evidence showing that the applicant is at least 65 years old. Such a showing may be provided by evidence such as a birth certificate or a statement from the applicant.

The evidence submitted with the petition is a declaration of Arthur Woodrow and a photocopy of his driver's license indicating that he is at least 65 years of age.

The examiner is directed (1) to make an interference search for possible interfering applications, (2) to promptly examine this application out of turn, and (3) if any interfering application is discovered, to examine such application simultaneously and state in the first official letter of such application that it is being taken out of turn because of a possible interference.

Petitioner is advised that this application will continue to be special, throughout its entire prosecution and pendency, including interference or appeal, if any, only if petitioner makes a prompt ***bona fide*** effort, in response to each Office action, to place the application in condition for allowance, even if it is necessary to conduct an interview with the examiner to accomplish this purpose.

SUMMARY: Petition to Make Special **GRANTED**.

Randolph A. Reese
Special Programs Examiner
Technology Center 3600
(703) 308-2121

RAR/dcg: 1/24/05

UNITED STATES PATENT AND TRADEMARK OFFICE

UNITED STATES DEPARTMENT OF COMMERCE
United States Patent and Trademark Office
Address: COMMISSIONER FOR PATENTS
P.O. Box 1450
Alexandria, Virginia 22313-1450
www.uspto.gov

APPL NO.	FILING OR 371 (c) DATE	ART UNIT	FIL FEE REC'D	ATTY.DOCKET NO	DRAWINGS	TOT CLMS	IND CLMS
10/645,453	08/21/2003	1711	786	998-880DV	2	24	2

CONFIRMATION NO. 7977

20792
MYERS BIGEL SIBLEY & SAJOVEC
PO BOX 37428
RALEIGH, NC 27627

CORRECTED FILING RECEIPT

OC000000012558503

Date Mailed: 05/06/2004

Receipt is acknowledged of this regular Patent Application. It will be considered in its order and you will be notified as to the results of the examination. Be sure to provide the U.S. APPLICATION NUMBER, FILING DATE, NAME OF APPLICANT, and TITLE OF INVENTION when inquiring about this application. Fees transmitted by check or draft are subject to collection. Please verify the accuracy of the data presented on this receipt. **If an error is noted on this Filing Receipt, please write to the Office of Initial Patent Examination's Filing Receipt Corrections, facsimile number 703-746-9195. Please provide a copy of this Filing Receipt with the changes noted thereon. If you received a "Notice to File Missing Parts" for this application, please submit any corrections to this Filing Receipt with your reply to the Notice. When the USPTO processes the reply to the Notice, the USPTO will generate another Filing Receipt incorporating the requested corrections (if appropriate).**

Applicant(s)

Girma Gebreselassie, Southfield, MI;
Matt Starling, Ypsilanti, MI;
Surendra Khambete, West Bloomfield, MI;
Graham Tompson, Northville, MI;

Domestic Priority data as claimed by applicant

This application is a DIV of 10/041,223 01/07/2002 PAT 6,710,133
which claims benefit of 60/337,666 11/07/2001

Foreign Applications

If Required, Foreign Filing License Granted: 01/26/2004

Projected Publication Date: 05/20/2004

Non-Publication Request: No

Early Publication Request: No

Title

Recyclable vehicle interior articles and methods of making same

Preliminary Class

525

LICENSE FOR FOREIGN FILING UNDER
Title 35, United States Code, Section 184
Title 37, Code of Federal Regulations, 5.11 & 5.15

GRANTED

The applicant has been granted a license under 35 U.S.C. 184, if the phrase "IF REQUIRED, FOREIGN FILING LICENSE GRANTED" followed by a date appears on this form. Such licenses are issued in all applications where the conditions for issuance of a license have been met, regardless of whether or not a license may be required as set forth in 37 CFR 5.15. The scope and limitations of this license are set forth in 37 CFR 5.15(a) unless an earlier license has been issued under 37 CFR 5.15(b). The license is subject to revocation upon written notification. The date indicated is the effective date of the license, unless an earlier license of similar scope has been granted under 37 CFR 5.13 or 5.14.

This license is to be retained by the licensee and may be used at any time on or after the effective date thereof unless it is revoked. This license is automatically transferred to any related applications(s) filed under 37 CFR 1.53(d). This license is not retroactive.

The grant of a license does not in any way lessen the responsibility of a licensee for the security of the subject matter as imposed by any Government contract or the provisions of existing laws relating to espionage and the national security or the export of technical data. Licensees should apprise themselves of current regulations especially with respect to certain countries, of other agencies, particularly the Office of Defense Trade Controls, Department of State (with respect to Arms, Munitions and Implements of War (22 CFR 121-128)); the Office of Export Administration, Department of Commerce (15 CFR 370.10 (j)); the Office of Foreign Assets Control, Department of Treasury (31 CFR Parts 500+) and the Department of Energy.

NOT GRANTED

No license under 35 U.S.C. 184 has been granted at this time, if the phrase "IF REQUIRED, FOREIGN FILING LICENSE GRANTED" DOES NOT appear on this form. Applicant may still petition for a license under 37 CFR 5.12, if a license is desired before the expiration of 6 months from the filing date of the application. If 6 months has lapsed from the filing date of this application and the licensee has not received any indication of a secrecy order under 35 U.S.C. 181, the licensee may foreign file the application pursuant to 37 CFR 5.15(b).

UNITED STATES PATENT AND TRADEMARK OFFICE

Commissioner for Patents
United States Patent and Trademark Office
P.O. Box 1450
Alexandria, VA 22313-1450
www.uspto.gov

MYERS BIGEL SIBLEY & SAJOVEC
PO BOX 37428
RALEIGH, NC 27627

COPY MAILED

OCT 27 2004

OFFICE OF PETITIONS

In re Application of

Robert J. Letchford

Application No. 10/645,454

Filed: August 22, 2003

Attorney Docket No.: 208-6156CT

DECISION ON PETITION

This is a decision on the petition under 37 CFR 1.10 filed, April 16, 2004.

The petition is **dismissed.**

Any request for reconsideration of this decision must be submitted within TWO (2) MONTHS from the mail date of this decision. Extensions of time under 37 CFR 1.136(a) are permitted. The reconsideration request should include a cover letter entitled "Renewed Petition" under 37 CFR 1.10."

The instant petition was filed to correct what petitioner believed was an incorrect filing date accorded the above-cited application. Petitioner maintains that the correct filing date for the application should be August 21, 2003, not the currently accorded date of August 22, 2003. In support thereof, petitioner filed a copy of the Express Mail label EV353608754US showing a "date-in" of August 21, 2003, and a copy of the Office date-stamped postcard.

Section 1.10(a) of the Title 37 of the Code of Federal Regulations indicates that correspondence received by the Patent and Trademark Office that was delivered by Express Mail will be considered filed in the Office on the date of deposit with the United States Postal Service. Where there is a discrepancy between the date of deposit as shown on the Express Mail label and the filing date accorded the correspondence by the Office, 37 CFR 1.10(c) provides that an applicant may petition to have the Commissioner accord the correspondence a filing date as of the "date in" on Express Mail label. In accordance with 37 CFR 1.10(c), a successful petition must:

(1) . . . be filed promptly after the person becomes aware that the Office has accorded

or will accord a filing date other than the USPS deposit date;

2) [provide] the number on the Express Mail mailing label was placed on a paper(s) or fee(s) that constituted the correspondence prior to the original mailing by Express Mail; and

(3) . . . include a true copy of the Express Mail mailing label showing the date-in and of any other official notation by the USPS relied upon to show the date of deposit.

The instant petition does not satisfy the requirements of item (2) above.

Relative to item (2), no paper was found among the application or petition papers that provided the number of the Express Mail label that constituted the correspondence prior to the original mailing. The application transmittal sheet Express Mail Certificate cites an Express Mail label number of "EV35360754US". The copy of the Express Mail label that petitioner used as evidence of the application's deposit on August 21, 2003, is Express Mail label "EV353608754US". Although an Express Mail number was cited on the sheet that contains the copy of the Office date-stamped postcard, the number is partially obscured by the postcard itself. In order for the petition to be considered grantable, petitioner must establish that the application papers were contained in Express Mail package EV353608754US by providing a copy of a paper filed with the original application that cites Express Mail number EV353608754.

Further correspondence with respect to this matter should be addressed as follows:

By mail: Mail Stop Petitions
Commissioner for Patents
Box 1450
Alexandria, VA 22313-1450

By facsimile: (571) 273-0025
Attn: Office of Petitions

Telephone inquiries concerning this decision should be directed to the undersigned at (571) 272-3222.

Kenya A. McLaughlin

Kenya A. McLaughlin
Petitions Attorney
Office of Petitions

UNITED STATES PATENT AND TRADEMARK OFFICE

Commissioner for Patents
United States Patent and Trademark Office
P.O. Box 1450
Alexandria, VA 22313-1450
www.uspto.gov

WOODS FULLER SHULTZ & SMITH PC
ATTN: JEFFREY A. PROEHL
P. O. BOX 5027
SIOUX FALLS, SD 57117

COPY MAILED

APR 19 2007

OFFICE OF PETITIONS

In re Application of	:	
Robert Wakley	:	
Application No. 10/645,464	:	DECISION GRANTING PETITION
Filed: August 21, 2003	:	UNDER 37 CFR 1.137(b)
Attorney Docket No. 23-0282	:	

This is a decision on the petition under 37 CFR 1.137(b), filed September 8, 2006, to revive the above-identified application.

The petition is **GRANTED**.

The above-identified application became abandoned for failure to reply within the meaning of 37 CFR 1.113 in a timely manner to the final Office action mailed August 19, 2005, which set a shortened statutory period for reply of three (3) months. No extensions of time under the provisions of 37 CFR 1.136(a) were obtained. Accordingly, the above-identified application became abandoned on November 20, 2005. A Notice of Abandonment was mailed on April 18, 2006.

The petition satisfies the conditions for revival pursuant to the provisions of 37 CFR 1.137(b) in that (1) the reply (request for continued examination (RCE), $395 fee therefor, and submission as required by 37 CFR 1.114), (2) the $750 petition fee, and (3) the required statement of unintentional delay have been received. Accordingly, the reply to the final Office action of August 19, 2005 is accepted as having been unintentionally delayed.

Telephone inquiries concerning this decision should be directed to the undersigned at (571) 272-3218.

This matter is being referred to Technology Center AU 3618 for processing the RCE and for appropriate action in the normal course of business on the amendment received September 8, 2006.

Frances Hicks
Petitions Examiner
Office of Petitions

UNITED STATES PATENT AND TRADEMARK OFFICE

COMMISSIONER OF PATENTS

May 12, 2005

Alfred A. Stadnicki
Antonelli, Terry, Stout & Kraus
Suite 1800
1300 North Seventeenth St.
Arlington, Va 22209

In re Application of:
Ganesan et al
Serial No.: 10/645,521 On Petition
Filing Date: August 22, 2003
For: **ELECTRONIC BILL PRESENTMENT WITH CENTRALIZED ACCESS TO BILL AVAILA INFORMATION**

In response to the petition received on March 18, 2005, to withdraw the holding of abandonment in the above application.

The petition is Granted.

The above-identified application became abandoned for failure to reply within the meaning of 37 C.D.R 1.113 in a timely manner to the Notice to File Missing Parts of Nonprovisional Application mailed November 17, 2003 Which set forth a shortened statutory period for reply of two months. Accordingly, the above-identified application became abandoned January 21, 2004.

The evidence submitted is sufficient to establish that the petitioners never received the Notice to File Missing Parts of Nonprovisional Application mailed November 17, 2003.

Enclosed is a new Notice to File Missing Parts of Nonprovisional Application Papers giving counsel 2 months from the date of the notice to respond.

The application was abandoned in error. The office regrets any inconvenience this may have caused the client.

Telephone inquiries concerning this application may be directed to Doshie E. Day (703) 308-3640.

Doshie E. Day
Program Management Assistant
Office of Initial Patent Examination

UNITED STATES PATENT AND TRADEMARK OFFICE

Commissioner for Patents
United States Patent and Trademark Office
P.O. Box 1450
Alexandria, VA 22313-1450
www.uspto.gov

SUTHERLAND ASBILL & BRENNAN LLP
999 PEACHTREE STREET
ATLANTA, GA 30309

COPY MAILED

DEC 15 2009

OFFICE OF PETITIONS

In re Application of :
Ganesan et al. :
Application No. 10/645,521 : ON APPLICATION FOR
Filed: August 22, 2003 : PATENT TERM ADJUSTMENT
Atty. Docket No. 23952-0018 :

This is in response to the APPLICATION FOR PATENT TERM ADJUSTMENT UNDER 37 C.F.R. § 1.705(d), filed August 12, 2009, which is properly treated under 37 C.F.R. 1.705(b). Applicants submit that the correct patent term adjustment to be indicated on the patent is one thousand four hundred fifty-three (1,453) days, not one thousand one hundred eighty-seven (1,187) days as calculated by the Office as of the mailing of the initial determination of patent term adjustment. Applicants seek this correction solely on the basis that the Office will take in excess of three years to issue this patent.

As the instant application for patent term adjustment requests reconsideration of the patent term adjustment as it relates to the Office's failure to issue the patent within three years of the filing date, the application for patent term adjustment under 37 CFR 1.705(d) is **DISMISSED as PREMATURE**.

Knowledge of the actual date the patent issues is required to calculate the amount, if any, of additional patent term patentees are entitled to for Office failure to issue the patent within three years. See 37 CFR 1.702(d). (This is true even where a request for continued examination (RCE) was filed). The computer will not undertake the § 1.702(d) calculation until the actual date of issuance of the patent has been determined. Likewise, the computer will not calculate any further Office delay under 37 CFR 1.702(a)(4) or applicant delay under 37 CFR 1.704(c)(10) until the actual date of issuance of the patent has been determined. As such, the Office cannot make a

determination on the correctness of the patent term adjustment until the patent has issued.

Requesting reconsideration of the patent term adjustment to be indicated on the patent under 37 CFR 1.705(d) based on the initial determination of patent term adjustment and a projected issuance date of the patent (or even the filing date of the request for continued examination) is premature. Accordingly, it is appropriate to dismiss such a request as premature.

Rather than file an application for patent term adjustment under 37 CFR 1.705(b) contesting the 37 CFR 1.702(b) calculation at the time of the mailing of the notice of allowance, applicants are advised that they may wait until the time of the issuance of the patent and file a request for reconsideration of the patent term adjustment pursuant to 37 CFR 1.705(d). As the USPTO does not calculate the amount of time earned pursuant to 37 CFR 1.702(b) until the time of the issuance of the patent, the Office will consider any request for reconsideration of the patent term adjustment due to an error in the calculation of 37 CFR 1.702(b) to be timely if the request for reconsideration is filed within two months of the issuance of the patent. However, as to all other bases for contesting the initial determination of patent term adjustment received with the notice of allowance, applicants must timely file an application for patent term adjustment prior to the payment of the issue fee.[1]

The Office acknowledges submission of the $200.00 fee set forth in 37 CFR 1.18(e) for consideration of the application for patent term adjustment under 37 CFR 1.705(d).

Any request for reconsideration of the patent term adjustment indicated on the patent must be timely filed within two months

---

[1] For example, if applicants dispute both the calculation of patent term adjustment under 37 CFR 1.702(a)(1) for Office failure to mail a first Office action or notice of allowance not later than fourteen months after the date on which the application was filed, and under 37 CFR 1.702(b) for Office failure to issue a patent within three years of the actual filing date of the application, then applicants must still timely file an application for patent term adjustment prior to the payment of the issue fee to contest the calculation of Office delay in issuing a first Office action or notice of allowance. See 37 CFR 1.705(b) and 35 U.S.C. 154(b)(3)(B). A dispute as to the calculation of the § 1.702(a)(1) period raised on request for reconsideration of patent term adjustment under 37 CFR 1.705(d) will be dismissed as untimely filed.

after issuance pursuant to 37 CFR 1.705(d) and must include payment of the required fee under 37 CFR 1.18(e).

The Office of Data Management has been advised of this decision. This application is being referred to the Office of Data Management for issuance of the patent.

Telephone inquiries specific to this decision should be directed to Gay Ann Spahn at (571) 272-8011.

Christina Tartera Donnell for

David A. Bucci
Petitions Examiner
Office of Petitions

UNITED STATES PATENT AND TRADEMARK OFFICE

UNITED STATES DEPARTMENT OF COMMERCE
United States Patent and Trademark Office
Address: COMMISSIONER FOR PATENTS
P.O. Box 1450
Alexandria, Virginia 22313-1450
www.uspto.gov

SUTHERLAND II
SUTHERLAND, ASBILL & BRENNAN, LLC
999 PEACHTREE STREET
ATLANTA, GA 30309

Mail Date: 04/21/2010

Applicant	: Ravi Ganesan	: DECISION ON REQUEST FOR
Patent Number	: 7657484	: RECALCULATION of PATENT
Issue Date	: 02/02/2010	: TERM ADJUSTMENT IN VIEW
Appliction No	: 10/645,521	: OF WYETH AND NOTICE OF INTENT TO
Filed	: 08/22/2003	: ISSUE CERTIFICATE OF CORRECTION
		:

The Request for Recalculation is **GRANTED** to the extent indicated.

The patent term adjustment has been determined to be **1384** days. The USPTO will *sua sponte* issue a certificate of correction reflecting the amount of PTA days determined by the recalculation.

Prior to the issuance of the certificate of correction, the USPTO will afford patentee an opportunity to be heard and request reconsideration. Accordingly, patentee has **one month or thirty (30) days**, whichever is longer, to file a request for reconsideration of this patent term adjustment calculation. See 35 U.S.C. 154(b)(3)(B)(ii) and 37 CFR 1.322(a)(4). No extensions of time will be granted under 37 CFR 1.136.

Patentee should use document code PET.OP if electronically filing a request for reconsideration of this patent term adjustment calculation. The patentee must also include the information required by 37 CFR 1.705(b)(2) and the fee required by 37 CFR 1.18(e). If patentee does not file a timely request for reconsideration of this patent term adjustment calculation including the information required by 37 CFR 1.705(b)(2) and the fee required by 37 CFR 1.18(e), the USPTO will issue a certificate of correction reflecting the PTA determination noted above.

Patentee should be aware that in order to preserve the right to review in the United States District Court for the District of Columbia of the USPTO patent term adjustment determination, patentee must ensure that he or she also take the steps required under 35 U.S.C. 154(b)(4)(A) in a timely manner. Nothing in the request for recalculation should be construed as providing an alternative time frame for commencing a civil action under 35 U.S.C. 154(b)(4)(A).

Any questions concerning this decision should be directed to the Office of Patent Legal Administration at 571-272-7702.

UNITED STATES PATENT AND TRADEMARK OFFICE

UNITED STATES DEPARTMENT OF COMMERCE
United States Patent and Trademark Office
Address: COMMISSIONER FOR PATENTS
P.O. Box 1450
Alexandria, Virginia 22313-1450
www.uspto.gov

SUTHERLAND II
SUTHERLAND, ASBILL & BRENNAN, LLC
999 PEACHTREE STREET
ATLANTA, GA 30309

Mail Date: 05/18/2010

Applicant : Ravi Ganesan
Patent Number : 7657484
Issue Date : 02/02/2010
Application No: 10/645,521
Filed : 08/22/2003

: NOTICE CONCERNING IMPROPER
: CALCULATION OF PATENT TERM
: ADJUSTMENT BASED UPON USPTO
: IMPROPERLY MEASURING REDUCTION
: PERIOD UNDER 37 CFR 1.704(c)(10).

The United States Patent and Trademark Office (USPTO) discovered that in processing the recent recalculation decisions mailed in response to patentee's filed Request for Recalculation of Patent Term Adjustment in view of Wyeth, the USPTO improperly measured the reduction period for reductions under 37 CFR 1.704(c)(10). Pursuant to 37 CFR 1.704(c)(10), patentee's reduction begins on the date of filing the amendment under 37 CFR 1.312 ("1.312 amendment") or other related paper and ends on the date that the Office mails a response to the filing of the 1.312 amendment or other paper. It has been discovered that during the recalculation, the calculation failed to the limit the reduction to the mail date of the response to the 1.312 amendment or other paper. Accordingly, patentee's reductions were greater than warranted.

This notice **VACATES** the previous GRANTED request for recalculation and provides patentee with a revised GRANTED recalculation.

The patent term adjustment has been determined to be **1498** days. The USPTO will *sua sponte* issue a certificate of correction reflecting the amount of patent term adjustment (PTA) days determined by the recalculation.

Prior to the issuance of the certificate of correction, the USPTO will afford patentee an opportunity to be heard and request reconsideration. Accordingly, patentee has **one month or thirty (30) days** from the mail date of this notice, whichever is longer, to file a request for reconsideration of this PTA calculation. See 35 U.S.C. § 154(b)(3)(B)(ii) and 37 CFR 1.322(a)(4).

Patentee should use document code PET.OP if electronically filing a request for reconsideration of this PTA calculation. The patentee must also include the information required by 37 CFR 1.705(b)(2), and the fee required by 37 CFR 1.18(e). If patentee does not file a timely request for reconsideration of this PTA calculation, including the information required by 37 CFR 1.705(b)(2) and the fee required by 37 CFR 1.18(e), the USPTO will issue a certificate of correction reflecting the PTA determination noted above.

Patentee should be aware that in order to preserve the right of review of the USPTO's PTA determination in the United States District Court for the District of Columbia, patentee must ensure that the steps required under 35 U.S.C. § 154 (b)(4) are taken in a timely manner. Nothing in the request for recalculation should be construed as providing an alternative time frame for commencing a civil action under 35 U.S.C. § 154(b)(4).

UNITED STATES PATENT AND TRADEMARK OFFICE

COMMISSIONER FOR PATENTS
UNITED STATES PATENT AND TRADEMARK OFFICE
P.O. BOX 1450
ALEXANDRIA, VA 22313-1450
www.uspto.gov

ROBERT E. BUSHNELL & LAW FIRM
2029 K STREET NW
SUITE 600
WASHINGTON DC 20006-1004

RECEIVED

DEC 22 2008

OFFICE OF PETITIONS

In re Application of :
Kil, et al. : DECISION ON PETITION
Application No. 10/645,522 :
Filed: August 22, 2003 :
Atty. Dkt. No: P56857 :

This decision is in response to the petition to withdraw the holding of abandonment under 37 CFR 1.181, filed December 1, 2008.

The petition under 37 CFR 1.181 to withdraw the holding of abandonment is hereby **DISMISSED**.

Any request for reconsideration of this decision must be submitted within **TWO (2) MONTHS** from mail date of this decision. Extensions of time under 37 CFR 1.136(a) are permitted. The reconsideration request should include a cover letter entitled "Renewed Petition under 37 CFR 1.181 This is not a final agency decision.

The application became abandoned July 8, 2008 for failure to timely submit a proper reply to the non-final Office action mailed April 7, 2008. The non-final Office action set a three month shortened statutory period of time for reply. Notice of Abandonment was mailed November 28, 2008.

Petitioners assert non-receipt of the non-final Office action. Petitioners indicate that searches of the file jacket and docket records indicate that the non-final Office action was not received. Petitioners have included a copy of the docket records for July 7, 2008 which show "no entry for filing of missing parts..." Petitioners have provided a copy of the file jacket for the instant application. Petitioners have also provided a copy of a mail log from April 7, 2008 to April 14, 2008. Petitioners have also provided a "copy of some samples of misdelivered mails from U.S. PTO" to demonstrate misplacement of mail by the USPS.

The showing required to establish non-receipt of an Office communication must include a statement from the practitioner describing the system used for recording an Office action

received at the correspondence address of record with the USPTO. The statement should establish that the docketing system is sufficiently reliable. It is expected that the record would include, but not be limited to, the application number, attorney docket number, the mail date of the Office action and the due date for the response. Practitioner must state that the Office action was not received at the correspondence address of record, and that a search of the practitioner's record(s), including any file jacket or the equivalent, and the application contents, indicates that the Office action was not received. A copy of the record(s) used by the practitioner where the non-received Office action would have been entered had it been received is required. A copy of the practitioner's record(s) required to show non-receipt of the Office action should include the master docket for the firm. That is, if a three month period for reply was set in the non-received Office action, a copy of the master docket report showing all replies docketed for a date three months from the mail date of the non-received Office action must be submitted as documentary proof of non-receipt of the Office action. If no such master docket exists, the practitioner should so state and provide other evidence such as, but not limited to, the following: the application file jacket; incoming mail log; calendar; reminder system; or the individual docket record for the application in question.

The instant petition does not establish non-receipt of the Notice in compliance with the procedures set forth at MPEP 711.03(c). Specifically, the petition fails to describe the system used for recording an Office action received at the correspondence address of record with the USPTO. It is unclear if the copy of the docket records provided by petitioners is a "master docket." Thus, it cannot be found that practitioner's docketing system is sufficiently reliable.

Any renewed petition must establish non-receipt of the final Office action as set forth at MPEP 711.03(c).

ALTERNATE VENUE

Petitioners may wish to consider filing a petition stating that the delay was unintentional. Petitioner's attention is directed to 37 CFR 1.137(b) which provides for the revival of an "unintentionally" abandoned application without a showing that the delay in prosecution or in late payment of an issue fee was "unavoidable". An "unintentional" petition under 37 CFR 1.137(b) must be accompanied by the required petition fee and reply.

The filing of a petition under 37 CFR 1.137(b) cannot be intentionally delayed and therefore must be filed promptly. A person seeking revival due to unintentional delay cannot make a statement that the delay was unintentional unless the entire delay, including the delay from the date it was discovered that the application was abandoned until the filing of the petition to revive under 37 CFR 1.137(b), was unintentional. A statement that the delay was unintentional is not appropriate if petitioner intentionally delayed the filing of a petition for revival under 37 CFR 1.137(b).

Further correspondence with respect to this matter should be addressed as follows:

By mail:	**Mail Stop Petition** Commissioner for Patents P.O. Box 1450 Alexandria, VA 22313-1450
By facsimile:	(571) 273-8300
By hand delivery:	U.S. Patent and Trademark Office Customer Window, **Mail Stop Petition** Randolph Building 401 Dulany Street Alexandria, VA 22314

Telephone inquiries concerning this matter may be directed to the undersigned at (571) 272-3205.

Alesia M. Brown
Petitions Attorney
Office of Petitions

UNITED STATES PATENT AND TRADEMARK OFFICE

COMMISSIONER FOR PATENTS
UNITED STATES PATENT AND TRADEMARK OFFICE
P.O. BOX 1450
ALEXANDRIA, VA 22313-1450
www.uspto.gov

ROBERT E. BUSHNELL & LAW FIRM
2029 K STREET NW
SUITE 600
WASHINGTON DC 20006-1004

COPY MAILED

JUN 19 2009

OFFICE OF PETITIONS

In re Application of :
Kil, et al. : DECISION ON PETITION
Application No. 10/645,522 :
Filed: August 22, 2003 :
Atty. Dkt. No: P56857 :

This decision is in response to the renewed petition to withdraw the holding of abandonment under 37 CFR 1.181, filed February 10, 2009.

The application was held abandoned July 8, 2008 for failure to timely submit a proper reply to the non-final Office action mailed April 7, 2008. The non-final Office action set a three month shortened statutory period of time for reply. Notice of Abandonment was mailed November 28, 2008. A petition under 37 CFR 1.181 was filed December 1, 2008 and dismissed December 22, 2008.

The showing required to establish non-receipt of an Office communication must include a statement from the practitioner describing the system used for recording an Office action received at the correspondence address of record with the USPTO. The statement should establish that the docketing system is sufficiently reliable. It is expected that the record would include, but not be limited to, the application number, attorney docket number, the mail date of the Office action and the due date for the response. Practitioner must state that the Office action was not received at the correspondence address of record, and that a search of the practitioner's record(s), including any file jacket or the equivalent, and the application contents, indicates that the Office action was not received. A copy of the record(s) used by the practitioner where the non-received Office action would have been entered had it been received is required. A copy of the practitioner's record(s) required to show non-receipt of the Office action should include the master docket for the firm. That is, if a three month period for reply was set in the non-received Office action, a copy of the master docket report showing all replies docketed for a date three months from the mail date of the non-received Office action must be submitted as documentary proof of non-receipt of the Office

action. If no such master docket exists, the practitioner should so state and provide other evidence such as, but not limited to, the following: the application file jacket; incoming mail log; calendar; reminder system; or the individual docket record for the application in question.

The instant renewed petition and accompanying documents have been carefully review and found in compliance with procedures to establish non-receipt of an Office communication set forth at MPEP 711.03(c).

In view thereof, the holding of abandonment is withdrawn and the Notice of Abandonment is vacated.

Accordingly, the petition under 37 CFR 1.181 to withdraw the holding of abandonment is hereby **GRANTED**.

This application is being forwarded to Group Art Unit 2444 for re-mailing of the non-final Office action. The time period for reply will be set forth in the newly mailed non-final Office action.

Telephone inquiries concerning this matter may be directed to the undersigned at (571) 272-3205.

/ALESIA M. BROWN/

Alesia M. Brown
Petitions Attorney
Office of Petitions

UNITED STATES PATENT AND TRADEMARK OFFICE

UNITED STATES DEPARTMENT OF COMMERCE
United States Patent and Trademark Office
Address: COMMISSIONER FOR PATENTS
P.O. Box 1450
Alexandria, Virginia 22313-1450
www.uspto.gov

BUCHANAN INGERSOLL & ROONEY, PC
P.O. BOX 1404
ALEXANDRIA, VA 22313-1404

Mail Date: 04/20/2010

Applicant	: Ali Sazegari	: DECISION ON REQUEST FOR
Patent Number	: 7668894	: RECALCULATION of PATENT
Issue Date	: 02/23/2010	: TERM ADJUSTMENT IN VIEW
Appliction No	: 10/645,555	: OF WYETH AND NOTICE OF INTENT TO
Filed	: 08/22/2003	: ISSUE CERTIFICATE OF CORRECTION
		:

The Request for Recalculation is **GRANTED** to the extent indicated.

The patent term adjustment has been determined to be **943** days. The USPTO will *sua sponte* issue a certificate of correction reflecting the amount of PTA days determined by the recalculation.

Prior to the issuance of the certificate of correction, the USPTO will afford patentee an opportunity to be heard and request reconsideration. Accordingly, patentee has **one month or thirty (30) days**, whichever is longer, to file a request for reconsideration of this patent term adjustment calculation. See 35 U.S.C. 154(b)(3)(B)(ii) and 37 CFR 1.322(a)(4). No extensions of time will be granted under 37 CFR 1.136.

Patentee should use document code PET.OP if electronically filing a request for reconsideration of this patent term adjustment calculation. The patentee must also include the information required by 37 CFR 1.705(b)(2) and the fee required by 37 CFR 1.18(e). If patentee does not file a timely request for reconsideration of this patent term adjustment calculation including the information required by 37 CFR 1.705(b)(2) and the fee required by 37 CFR 1.18(e), the USPTO will issue a certificate of correction reflecting the PTA determination noted above.

Patentee should be aware that in order to preserve the right to review in the United States District Court for the District of Columbia of the USPTO patent term adjustment determination, patentee must ensure that he or she also take the steps required under 35 U.S.C. 154(b)(4)(A) in a timely manner. Nothing in the request for recalculation should be construed as providing an alternative time frame for commencing a civil action under 35 U.S.C. 154(b)(4)(A).

Any questions concerning this decision should be directed to the Office of Patent Legal Administration at 571-272-7702.

UNITED STATES PATENT AND TRADEMARK OFFICE

Commissioner for Patents
United States Patent and Trademark Office
P.O. Box 1450
Alexandria, VA 22313-1450
www.uspto.gov

JUL 26 2006

In re PATENT APPLICATION of:
Edward McNulty
Application No.: 10/645,574
Filed: August 22, 2003
For: Head Cover Trimming System

DECISION ON PETITION

This is a decision on the petition filed on May 23, 2005 by which Petitioner requests reconsideration and withdrawal of the restriction requirement rendered in the Office action mailed on December 29, 2004 and made final in the Office action dated March 24, 2005. The petition is considered pursuant to 37 CFR 1.144 and 37 CFR 1.181, and no fee is required.

The petition is granted-in-part.

A review of the record shows that a restriction requirement was made on December 29, 2004 requiring Petitioner to limit the prosecution of this case to a single invention among four groupings of claims as follows:

I. Claim 1, drawn to the combination of a head cover trimming system with a head cap and a cutting head system, classifiable in class 30, subclass 500.

II. Claims 2-13, drawn to the subcombination of a cutting head system, classifiable in class 30, subclass 347.

III. Claims 14-19, drawn to the subcombination of a head cap, classifiable in class 239, subclass 201.

IV. Claims 20 and 21, drawn to the method of trimming around a ground level head cover, classifiable in class 83, subclass 13.

Petitioner responded in a communication dated January 25, 2005 electing the group II invention for examination. From that point in the prosecution to date, Petitioner has cancelled claims 6, 20 and 21; amended claim 10 to be in independent form; and added new claims 22 and 23 drawn to the subcombination cutting head system, which would be categorized with the group II claims above. Claims 2-5 and 7-13 have been amended and found allowable. Claims 22 and 23 have been indicated allowable.

The undersigned will address then propriety of the restriction requirement with respect to the currently pending claims.

Petitioner is traversing the requirement on the grounds that the subcombinations of groups II and III are not distinct from the combination of group I, and that the method of group IV would not impose any further burden if examined with the remaining claims.

There are two criteria for a proper requirement for restriction between patentably distinct inventions:

(A) The inventions must be independent or distinct as claimed; and

(B) There would be a serious burden on the Examiner if restriction were not required.

First consideration will be given for the inventions that fall within different categories of inventions, i.e., the method of group IV and the apparatus of groups I-III. In accordance with the MPEP 806.05 (e), distinctness between these claimed inventions does exist since the method can be performed by apparatus materially different than that set forth in the apparatus claims of groups I – III. The undersigned believes that Petitioner would agree with such distinctness especially in light of his response to the restriction dated January 25, 2005, page 3, third full paragraph. Since Petitioner cancelled claims 20 and 21, in order to preserve Petitioners rights in filing a divisional application under 35 U.S.C. 121, the restriction requirement between the method and apparatus groupings must stand. However, since this case is not under final rejection and claims 20 and 21 have been cancelled, Petitioner's attention is directed to the MPEP sections 821.04 – 821.04 (b) providing guidelines for rejoinder of non-elected claims with elected claims. Otherwise, the restriction between groups I – III and group IV is moot.

Considering the distinctness between the combination of the group I claims and the subcombinations of the groups II and III claims, such related inventions are distinct if the inventions as claimed are not connected in at least one design, operation, or effect, AND wherein at least one invention is patentable over the other. See MPEP section 802.02. Each of the parts of this invention as claimed are connected by design, but have different operations. The cutting head system trims around the head cover of the sprinkler system, while the head cap protects the head cover and centers the cutting head over the head cover. For further guidance in showing distinctness, the criteria set forth in the MPEP section 806.05 (c) states that,

"Inventions are distinct if it can be shown that a combination as claimed:

(A) does not require the particulars of the subcombination as claimed <u>for patentability</u> (to show novelty and unobviousness), and

(B) the subcombination can be shown to have utility either by itself or in another materially different combination."

Considering the distinctness between the subcombination groups II and III claims, the MPEP section 806.05(d) provides guidance for determining distinctness between

subcombinations disclosed as usable together in a single combination. "The subcombinations are distinct if they do not overlap in scope and are not obvious variants, and if it is shown that at least one subcombination is separately usable." The meaning of "not overlapping in scope" can be found in the MPEP section 806.04(f). In other words, if one claim recites limitations disclosed for a first subcombination, but not a second subcombination, while a second claim recites limitations disclosed only for the second subcombination, but not the first subcombination, such claims do not overlap in scope. Comparing claims 2, 10 and 22 of the group II claims to claim 14 of the group III claims, clearly, they "do not overlap in scope and the differences are not obvious variants. The last element of distinctness to show is if at least one of the subcombinations is separately usable, not from each other, but from the disclosed combination. Referring to figures 2 and 3, the head cap is nothing more than a conically shaped plate with a central hole therethrough, which could be used for many different other purposes such as a cover for a container, a stand for a pole such as a small flag pole, a candle stick holder, etc. Petitioner appears to be in agreement with this as is evident from his remarks on page 2, second full paragraph of the petition. Also, the claimed subject matter of each subcombination is so diverse such that the search and examination for each would result in divergent fields of search would be considered a burden on the examiner.

At this point in the prosecution of this case, Petitioner has amended combination claim 1 of group I to include the allowable subject matter of subcombination claim 2 of group II, which renders claim 1 allowable. Referring again to the criteria (A) above for showing distinctness between a combination/subcombination relationship, distinctness between groups I and II no longer exist since the patentability of the combination as claimed in claim 1 requires the particulars of the subcombination as claimed in claim 2 for patentability. Distinctness between groups I and III does exist, i.e., that the particulars of the subcombination as claimed of group III is not required in the combination as claimed in group I for patentability as evidenced by the allowability of the subcombination of Group II. Furthermore, the search and examination of the group III claims would be divergent from the search and examination of the group I claim which would constitute a burden on the examiner. Thus, the restriction requirement between groups I and III remains proper.

To summarize:

1) the restriction requirement between the apparatus claims 1-5, 7-19, 22 and 23 of groups I-III and cancelled method claims 20 and 21 of group IV (should Petitioner decide to rejoin these claims) stands;

2) the restriction requirement between group I (combination claim 1), and group II (subcombination claims 2-5, 7-13, 22 and 23) is hereby withdrawn; and

3) the restriction requirement between group I (combination claim 1) and group III (subcombination claims 14-19) stands.

For the reasons outlined above, Petitioner is granted partial relief from the restriction requirement. The amendment presented September 30, 2005 is deemed responsive to which a new Office action will be rendered. The application is being forwarded to the Supervisory Patent Examiner of Art Unit 3724 who will have the examiner promulgate an action on the merits of the presently pending claims not inconsistent with this decision.

PETITION GRANTED-IN-PART

Frederick Schmidt, Director
Technology Center 3700

Date: July 13, 2006
DIEDERIKS &WHITELAW, PLC
12471 Dillingham Square, #301
Woodbridge, VA 22192

UNITED STATES PATENT AND TRADEMARK OFFICE

Commissioner for Patents
United States Patent and Trademark Office
P.O. Box 1450
Alexandria, VA 22313-1450
www.uspto.gov

UNILEVER
PATENT DEPARTMENT
45 RIVER ROAD
EDGEWATER NJ 07020

COPY MAILED

OCT 12 2004

OFFICE OF PETITIONS

In re Application of :
Verma Ritu et al. :
Application No. 10/645,576 : ON PETITION
Filed: August 21, 2003 :
Attorney's Docket No. J6852(C) :

This is a decision on the petition filed July 9, 2004 under 37 CFR 1.10(c), requesting that the above-identified application be accorded a filing date of August 21, 2003, rather than the presently accorded filing date of August 22, 2003. The petition is being treated under 37 CFR 1.10(d).

Petitioners request the earlier filing date on the basis that the application was deposited in Express Mail service on August 21, 2003, pursuant to the requirements of 37 CFR 1.10.

Paragraph (d) of 37 CFR 1.10 states that:

> Any person filing correspondence under this section that was received by the Office and delivered by the "Express Mail Post Office to Addressee" service of the USPS, who can show that the "date-in" on the "Express Mail" mailing label or other official notation entered by the USPS was incorrectly entered or omitted by the USPS, may petition the Commissioner to accord the correspondence a filing date as of the date the correspondence is shown to have been deposited with the USPS, provided that:
>
> (1) The petition is filed promptly after the person becomes aware that the Office has accorded, or will accord, a filing date based upon an incorrect entry by the USPS;
>
> (2) The number of the "Express Mail" mailing label was placed on the paper(s) or fee(s) that constitute the correspondence prior to the original mailing by "Express Mail"; and
>
> (3) The petition includes a showing which establishes, to the satisfaction of the Commissioner, that the requested filing date was the date the correspondence was deposited in "Express Mail Post Office to Addressee" service prior to the last scheduled pickup for that day. Any showing pursuant to this paragraph must be corroborated by evidence from the USPS or that came

into being after deposit and within one business day of the deposit of the correspondence in the "Express Mail Post Office to Addressee" service of the USPS. Any statement submitted in support of such a showing pursuant to this paragraph must be a verified statement if made by a person other than an employee of the USPS or a practitioner as defined in s 10.1®) of this chapter.

A grantable petition under 37 CFR 1.10(d) must include "a showing which establishes, to the satisfaction of the Commissioner, that the requested filing date was the date the correspondence was deposited in "Express Mail Post Office to Addressee" service prior to the last scheduled pickup for that day." In addition, the showing "must be corroborated by evidence from the USPS or that came into being after deposit and within one business day of the deposit of the correspondence in the 'Express Mail Post Office to Addressee' service of the USPS."

The petition filed July 9, 2004, is accompanied by a United States Postal Service Express Mail Pickup Service Statement which includes Express Mail label no. ER015864060US, the same Express Mail label number found on the application papers, in addition to a letter from Postmaster Frank Zeevalk, indicating that the US Postal Service error caused the date-in not to be entered on the express mail label identified above. Finally, petitioners have included a copy of information found in the USPS Internet Track & Confirm Database which also corroborates that an item bearing Express Mail Label No. ER015864060US was deposited in US Express Mail prior to August 22, 2003 since it was delivered on August 22, 2003. Thus, the petition is accompanied by the corroborating evidence required by the rule. Accordingly, the petition is **GRANTED**.

In view of the above and given the basis for granting the petition, the petition fee in the amount of $130 will be credited back to deposit account no. 12-1155.

The application is being forwarded to the Office of Initial Patent Examination for correction of the filing date to August 21, 2003.

Telephone inquiries concerning this matter may be directed to the undersigned Petitions Attorney at (571) 272-3212.

Patricia Faison-Ball
Senior Petitions Attorney
Office of Petitions

SPE RESPONSE FOR CERTIFICATE OF CORRECTION

Paper No.: X

DATE : October 24,2007

TO SPE OF : ART UNIT 3729

SUBJECT : Request for Certificate of Correction for Appl. No.: 10/645,582 Patent No.: 6971171 B2

A response is requested with respect to a request for a certificate of correction.

With respect to the change(s) requested to correct Office and/or Applicant's errors, should the patent read as shown in the certificate of correction attached herewith or the COCIN document(s), in IFW images for the above-identified patented application? No new matter should be introduced, nor should the scope or meaning of the claims be changed.

If the response is for an IFW, within 7 days, please complete and forward the response, to the employee (named below) via scanning into application images, using document code **COCX**.

DO NOT SENT TO ATTORNEY

If the response is for a paper file wrapper, please complete the response and forward the response with the paper file wrapper, to the employee (named below), within 7 days, to:

Certificates of Correction Branch (CofC)
South Tower - 9A22
Palm Location 7580

You can fax the Directors/SPE response to 571-270-9990

LAMONTE NEWSOME
Certificates of Correction Branch
703-308-9390 ext. 112

Thank You For Your Assistance

The request for issuing the above-identified correction(s) is hereby:
Note your decision on the appropriate box.

☒ **Approved**	**All** changes apply.
☐ **Approved in Part**	Specify below which changes **do not** apply.
☐ **Denied**	State the reasons for denial below.

Comments: _____

PETER VO
SUPERVISORY PATENT EXAMINER
TECHNOLOGY CENTER 3700

SPE 3729 **Art Unit**

UNITED STATES PATENT AND TRADEMARK OFFICE

Commissioner for Patents
United States Patent and Trademark Office
P.O. Box 1450
Alexandria, VA 22313-1450
www.uspto.gov

ARENT FOX PLLC
1050 CONNECTICUT AVENUE, N.W.
SUITE 400
WASHINGTON, DC 20036-5339

In re Application of	: DECISION ON REQUEST
Hidekazu Michioka et al	: UNDER 37 CFR 1.97
Application No. 10/645,583	: FOR CONSIDERATION
Filed: august 22, 2003	: OF INFORMATION
For: METHOD OF MANUFACTURING	: DISCLOSURE STATEMENT
ROLLING ELEMENT STRING	: AFTER ALLOWANCE

The request under 37 CFR 1.97(d)(2) for consideration of an information disclosure statement filed on August 12, 2004 after allowance has been:

( ) GRANTED.

(X) DENIED.

The request lacks:

(X) The required fee under 37 CFR 1.97(d)(3) and 1.17(I)(1).

(X) A proper certification as specified in 37 CFR 1.97(e)(1) or 1.97(e)(2).

The information disclosure statement has been placed of record in the file and will not be considered by the examiner. (see Federal Register 65 *Fed. Reg.* 54603 (September 8, 2000); Official Gazette 1238 *Off. Gaz. Pat Office* 77 (September 19, 2000) for rule changes to 37 CFR 1.97).

David A. Bucci, SPE
Art Unit 3682
(703) 308-3668

UNITED STATES PATENT AND TRADEMARK OFFICE

Commissioner for Patents
United States Patent and Trademark Office
P.O. Box 1450
Alexandria, VA 22313-1450
www.uspto.gov

SEIMENS CORPORATION
INTELLECTUAL PROPERTY
170 WOOD AVENUE SOUTH
ISELIN, NJ 08830

COPY MAILED

JUL 09 2007

OFFICE OF PETITIONS

In re Application of :
Hidekazu Michioka, et. al. :
Application No. 10/645,590 : ON PETITION
Filed: August 22, 2003 :
Attorney Docket No. 2003P12857US :

This is a decision on the petition under 37 CFR 1.137(b), filed on July 17, 2006, to revive the above-identified application. The delay in responding is regretted.

The application became abandoned for failure to respond to the non-final Office action mailed November 16, 2005. A Notice of Abandonment was mailed on June 6, 2006.

The petition satisfies the requirements of 37 CFR 1.137(b), in that, petitioner has supplied (1) the reply in the form of an amendment and terminal disclaimer with $130; (2) the petition fee of $1,500; and (3) an adequate statement of unintentional delay. Therefore, the petition is **GRANTED**.

As authorized, the petition fee of $1,500 and the terminal disclaimer fee of $130 have been charged to petitioner's deposit account. However, since an extension of time under 37 CFR 1.136 must be filed prior to the expiration of the maximum extendable period for reply, the $1,020 extension of time fee is unnecessary and will **not** be charged to petitioner's deposit account.

This application file is being referred to Technology Center Art Unit 3752, for review of the amendment filed with the instant petition.

Telephone inquiries concerning this decision should be directed to the undersigned at (571) 272-3226.

Andrea Smith
Petitions Examiner
Office of Petitions

UNITED STATES PATENT AND TRADEMARK OFFICE

Commissioner for Patents
United States Patent and Trademark Office
P.O. Box 1450
Alexandria, VA 22313-1450
www.uspto.gov

SEIMENS CORPORATION
INTELLECTUAL PROPERTY
170 WOOD AVENUE SOUTH
ISELIN, NJ 08830

COPY MAILED

FEB 0 2 2009

OFFICE OF PETITIONS

In re Application of :
Hidekazu Michioka, et. al. :
Application No. 10/645,590 : DECISION ON PETITION
Filed: August 22, 2003 :
Attorney Docket No. 2003P12857US :

This is a decision on the petition under the unintentional provisions of 37 CFR 1.137(b), filed December 22, 2008, to revive the above-identified application.

The petition is **GRANTED**.

This application became abandoned for failure to timely file a reply within the meaning of 37 CFR 1.113 to the Final Office Action of April 7, 2008. The proposed reply required for consideration of a petition to revive must be a Notice of Appeal (and appeal fee required by 37 CFR 41.20(b)(2)), an amendment that *prima facie* places the application in condition for allowance, a Request for Continued Examination (RCE) and submission (37 CFR 1.114), or the filing of a continuing application under 37 CFR 1.53(b). See MPEP 711.03(c)(III)(A)(2). No extensions of time pursuant to the provisions of 37 CFR 1.136(a) were obtained. Accordingly, the date of abandonment of this application is July 8, 2008.

The petition satisfies the requirements of 37 CFR 1.137(b) in that petitioner has supplied (1) the reply in the form of a Request for Continued Examination (RCE) and fee of $810; (2) the petition fee of $1,620; and (3) a proper statement of unintentional delay.

There is no indication that the person signing the petition was ever given a power of attorney or authorization of agent to prosecute the above-identified application. However, in accordance with 37 CFR 1.34(a), the signature of Edward J. Stemberger appearing on the petition shall constitute a representation to the United States Patent and Trademark Office that he is authorized to represent the particular party in whose behalf he acts. If petitioner desires to receive future correspondence regarding this application, the appropriate power of attorney or authorization of agent must be submitted. A courtesy copy of this decision is being mailed to petitioner.

It is not apparent whether the statement of unintentional delay was signed by a person who would have been in a position of knowing that the entire delay in filing the required reply from the due date for the reply until the filing of a grantable petition pursuant to 37 CFR 1.137(b) was unintentional. Nevertheless, in accordance with 37 CFR 10.18, the statement is accepted as constituting a certification of unintentional delay. However, in the event that petitioner has no knowledge that the delay was unintentional, petitioner

must make such an inquiry to ascertain that, in fact, the delay was unintentional. If petitioner discovers that the delay was intentional, petitioner must so notify the Office.

Telephone inquiries concerning this decision should be directed to Denise Williams at (571) 272-8930.

This application is being referred to Technology Center AU 3752 for processing of the RCE and for appropriate action by the Examiner in the normal course of business on the amendment previously submitted.

Andrea Smith
Petitions Examiner
Office of Petitions

cc: EDWARD STEMBERGER
Manelli Denison and Selter, PLLC
2000 M Street, NW
Suite 700
Washington, DC 20036

UNITED STATES PATENT AND TRADEMARK OFFICE

Commissioner for Patents
United States Patent and Trademark Office
P.O. Box 1450
Alexandria, VA 22313-1450
www.uspto.gov

Peter N. Lalos
Stevens, Davis, Miller & Mosher, OLLP
Suite 850
1615 L Street, NW
Washington, DC 20036-5622

COPY MAILED

MAR 0 6 2006

OFFICE OF PETITIONS

In re Application of Jaecklin :
Application No. 10/645,601 : Decision on Petition
Filing Date: August 22, 2003 :
Attorney Docket No. 21352 :

This is a decision on the petition under 37 CFR 1.137(b), filed November 2, 2005, to revive the above-identified application.

The petition is **granted**.

The above-identified application became abandoned for failure to reply in a timely manner to the Notice to File Missing Parts of Application (Notice) mailed November 1, 2004. The Notice set a period for reply of two (2) months from the mail date of the Notice. No extensions of time under the provisions of 37 CFR 1.136(a) were obtained. Accordingly, the above-identified application became abandoned as of midnight on February 1, 2005. A Notice of Abandonment was mailed on July 14, 2005.

The instant petition requests revival of the application.

Petitioner has met the requirements to revive the above-identified application pursuant to 37 CFR 1.137(b). Therefore, the petition is granted and the application is revived.

The Office of Initial Patent Examination will be informed of the instant decision so that it may continue to prepare the application for examination.

Telephone inquiries regarding this communication should be directed to Petitions Attorney Steven Brantley at (571) 272-3203.

Charles Steven Brantley
Senior Petitions Attorney
Office of Petitions

UNITED STATES PATENT AND TRADEMARK OFFICE

Commissioner for Patents
United States Patent and Trademark Office
P.O. Box 1450
Alexandria, VA 22313-1450
www.uspto.gov

BIRCH STEWART KOLASCH & BIRCH
PO BOX 747
FALLS CHURCH VA 22040-0747

COPY MAILED

DEC 0 5 2008

OFFICE OF PETITIONS

In re Application of	:	
Yoshio Sugimoto, et al.	:	
Application No. 10/645,608	:	DECISION GRANTING PETITION
Filed: August 22, 2003	:	UNDER 37 CFR 1.313(c)(2)
Attorney Docket No. 2895-0138P	:	

This is a decision on the petition under 37 CFR 1.313(c)(2), filed December 4, 2008, to withdraw the above-identified application from issue after payment of the issue fee.

The petition is **GRANTED**.

The above-identified application is withdrawn from issue for consideration of a submission under 37 CFR 1.114 (request for continued examination). *See* 37 CFR 1.313(c)(2).

Petitioner is advised that the issue fee paid on November 10, 2008 cannot be refunded. If, however, this application is again allowed, petitioner may request that it be applied towards the issue fee required by the new Notice of Allowance.[1]

Telephone inquiries should be directed to Terri Williams at (571) 272-2991.

This application is being referred to Technology Center AU 1796 for processing of the request for continued examination under 37 CFR 1.114 and for consideration of the concurrently filed information disclosure statement.

Terri Williams
Petitions Examiner
Office of Petitions

---

[1] *The request to apply the issue fee to the new Notice may be satisfied by completing and returning the new Part B – Fee(s) Transmittal Form (along with any balance due at the time of submission). Petitioner is advised that the Issue Fee Transmittal Form* ***must*** *be completed and timely submitted to avoid abandonment of the application.*

UNITED STATES PATENT AND TRADEMARK OFFICE

COMMISSIONER FOR PATENTS
UNITED STATES PATENT AND TRADEMARK OFFICE
P.O. BOX 1450
ALEXANDRIA, VA 22313-1450
www.uspto.gov

MAILED
FROM DIRECTORS OFFICE

MAY 06 2005

TECHNOLOGY CENTER 3600

Hoffman, Wasson & Gitler, P.C.
Suite 522
2361 Jefferson Davis Highway
Arlington, VA 22202

In re Application of :
David N. Rucker, et al. :
Application No. 10/645,635 :
Filed: August 22, 2003 :
For: TIMED FOOD-FILLED TOY DISPENSER :

DECISION ON PETITION TO WITHDRAW THE HOLDING OF ABANDONMENT

This is a decision on applicants' petition to withdrawal the holding of abandonment filed on September 21, 2004.

The petition is **GRANTED** in view of the following evidence of timely filing:

☒ Postcard receipt dated May 20, 2004.

☐ USPTO return facsimile receipt dated _____, which references the application by serial number and the amendment that was filed on that date.

☐ Certificate of Mailing/Transmission signed on _____. and supported by a statement under 37 C.F.R. 1.8(b)(3).

☐ Hand Delivery Receipt of the specific documents submitted dated _____.

☐ Certificate of Transmission of CPA under 37 C.F.R. 1.6 filed on _____.

☐ Express Mail Receipt under 37 C.F.R. 1.10 dated _____.

This application is being forwarded to the Supervisory Legal Instruments Examiner for entry of the response filed with the petition, then to the examiner for prompt action on the response.

RAR/rwg: 2/01/05

Randolph A. Reese
Special Programs Examiner
Group 3600

UNITED STATES PATENT AND TRADEMARK OFFICE

Commissioner for Patents
United States Patent and Trademark Office
P.O. Box 1450
Alexandria, VA 22313-1450
www.uspto.gov

WOOD, PHILLIPS, KATZ, CLARK & MORTIMER
500 W. MADISON STREET
SUITE 3800
CHICAGO, IL 60661

COPY MAILED

JUL 13 2005

OFFICE OF PETITIONS

In re Patent No. 6,790,423 :
Issue Date: September 14, 2004 :
Application No. 10/645,693 : ON PETITION
Filed: August 21, 2003 :
Attorney Docket No. MOD3216P0292US :

This is a decision on the petition filed September 13, 2004, which is being treated as a petition under 37 CFR 3.81(b)[1] to correct the assignee on the front page of the above-identified patent by way of a Certificate of Correction.

The petition is **GRANTED**.

Telephone inquiries concerning this matter may be directed to Retta Williams at (571) 272-3229. Any questions concerning the issuance of the Certificate of Correction should be directed to the Certificates of Correction Branch at (703) 305-8309.

This matter is being referred to the Certificates of Correction Branch for issuance of the requested Certificate of Correction.

Frances Hicks
Petitions Examiner
Office of Petitions
Office of the Deputy Commissioner
for Patent Examination Policy

[1] *See* Official Gazette of June 22, 2004

UNITED STATES PATENT AND TRADEMARK OFFICE

COMMISSIONER FOR PATENTS
UNITED STATES PATENT AND TRADEMARK OFFICE
P.O. BOX 1450
ALEXANDRIA, VA 22313-1450
www.uspto.gov

Chun-Pok Leung
TOWNSEND and TOWNSEND and CREW LLP
Two Embarcadero Center, 8th Floor
San Francisco, California 94111-3834

MAILED

AUG 2 3 2005

Technology Center 2100

In re Application of:
Yutaka ENKO et al
Application No. 10/645,699
Filed: August 20, 2003
For: FILE MIGRATION DEVICE

DECISION ON PETITION
TO MAKE SPECIAL

This is a decision on the renewed petition, filed on November 24, 2004 under 37 C.F.R. §102(d) and M.P.E.P. § 708.02(VIII): Accelerated Examination, to make the above-identified application special.

The petition is **GRANTED**.

M.P.E.P. § 708.02, Section VIII which sets out the prerequisites for a grantable petition for Accelerated Examination under 37 C.F.R. § 102(d) states in relevant part:

> A new application (one which has not received any examination by the examiner) may be granted special status provided that applicant (and this term includes applicant's attorney or agent) complies with each of the following items:
>
> (A) Submits a petition to make special accompanied by the fee set forth in 37 CFR 1.17(h);
>
> (B) Presents all claims directed to a single invention, or if the Office determines that all the claims presented are not obviously directed to a single invention, will make an election without traverse as a prerequisite to the grant of special status;
>
> (C) Submits a statement(s) that a pre-examination search was made, listing the field of search by class and subclass, publication, Chemical Abstracts, foreign patents, etc. A search made by a foreign patent office satisfies this requirement;
>
> (D) Submits one copy each of the references deemed most closely related to the subject matter encompassed by the claims if said references are not already of record; and
>
> (E) Submits a detailed discussion of the references, which discussion points out, with the particularity required by 37 CFR 1.111 (b) and (c), how the claimed subject matter is patentable over the references.
>
> In those instances where the request for this special status does not meet all the prerequisites set forth above, applicant will be notified and the defects in the request will be stated. The application will remain in the status of a new application awaiting action in its regular turn. In those instances where a request is defective in one or more respects, applicant will be given one

opportunity to perfect the request in a renewed petition to make special. If perfected, the request will then be granted. If not perfected in the first renewed petition, any additional renewed petitions to make special may or may not be considered at the discretion of the Group Special Program Examiner.

Applicant's submission of November 24, 2004 meets all the criteria set out above. Accordingly, the petition is **GRANTED**. The application file is being forwarded to the Examiner for accelerated examination in accordance with M.P.E.P. § 708.02. If the application is subsequently allowed, it will be given priority for printing. See M.P.E.P. § 1309.

Vincent N. Trans
Special Program Examiner
Technology Center 2100
Computer Architecture, Software, and
Information Security
571-272-3613

UNITED STATES PATENT AND TRADEMARK OFFICE

COMMISSIONER FOR PATENTS
UNITED STATES PATENT AND TRADEMARK OFFICE
P.O. BOX 1450
ALEXANDRIA, VA 22313-1450
www.uspto.gov

HUMAN GENOME SCIENCES INC
INTELLECTUAL PROPERTY DEPT.
14200 SHADY GROVE ROAD
ROCKVILLE MD 20850

COPY MAILED

MAY 16 2005

OFFICE OF PETITIONS

Applicant: Shi et al.
Appl. No.: 10/645,702
Filing Date: August 22, 2003
Title: INTERLEUKIN 17 RECEPTOR-LIKE PROTEIN
Attorney Docket No.: PF398P2D1
Pub. No.: US 2004/0115698 A1
Pub. Date: June 17, 2004

This is a decision on the request for a corrected patent application publication under 37 CFR 1.221(b), filed on August 2, 2004, for the above-identified application.

The request is granted.

The corrected patent application publication will be published in due course, unless the patent issues before the application republishes.

Inquiries relating to this matter may be directed to Mark Polutta at (571) 272-7709.

Mark O. Polutta
Office of Patent Legal Administration
Office of the Deputy Commissioner
for Patent Examination Policy

UNITED STATES PATENT AND TRADEMARK OFFICE

Commissioner for Patents
United States Patent and Trademark Office
P.O. Box 1450
Alexandria, VA 22313-1450
www.uspto.gov

HUNTON & WILLIAMS LLP
INTELLECTUAL PROPERTY DEPARTMENT
1900 K STREET, N.W.
SUITE 1200
WASHINGTON, DC 20006-1109

COPY MAILED

MAR 0 8 2005

OFFICE OF PETITIONS

In re Application of	:	
Lowther and Young	:	
Application No. 10/645,709	:	ON PETITION
Filing Date: August 21, 2003	:	
Attorney Docket No. 56162.000492	:	

This is a decision on the petition filed May 24, 2004, to waive the rules and accept the correction of the assignee on the Issue Fee Transmittal, form PTOL-85B.

The petition is granted.

The name of the assignee of the Issue Fee Transmittal Form has been changed to "Intersil Americas, Inc., Irving CA."

The file is being directed to the Office of Patent Publications for further processing.

Telephone inquiries concerning this petition decision may be directed to the undersigned at (571) 272-3222.

Kenya A. McLaughlin

Kenya A. McLaughlin
Petitions Attorney
Office of Petitions

UNITED STATES PATENT AND TRADEMARK OFFICE

Commissioner for Patents
United States Patent and Trademark Office
P.O. Box 1450
Alexandria, VA 22313-1450
www.uspto.gov

Kujin Lee
20430 Via Paviso E32
Cupertino CA 95014

COPY MAILED

DEC 0 5 2007

OFFICE OF PETITIONS

In re Application of
Lee, et al.
Application No. 10/645,716
Filed: August 7, 2003
Attorney Docket No. N/A
For: METHOD FOR ELIMINATING BLOOMING STREAK OF ACQUIRED IMAGE

: DECISION REFUSING STATUS
: UNDER 37 CFR 1.47(a)

This is in response to the petition under 37 CFR 1.47(a), filed August 7, 2003.

The petition is dismissed.

Rule 47 applicant is given TWO MONTHS from the mailing date of this decision to reply, correcting the below-noted deficiencies. Any reply should be entitled "Request for Reconsideration of Petition Under 37 CFR 1.47(a)," and should only address the deficiencies noted below, except that the reply may include an oath or declaration executed by the non-signing inventor. **FAILURE TO RESPOND WILL RESULT IN ABANDONMENT OF THE APPLICATION.** Any extensions of time will be governed by 37 CFR 1.136(a).

A grantable petition under 37 CFR 1.47(a) requires: (1) proof that the non-signing inventors cannot be reached or refuses to sign the oath or declaration after having been presented with the application papers (specification, claims and drawings); (2) an acceptable oath or declaration in compliance with 35 U.S.C. §§ 115 and 116; (3) the petition fee; and (4) a statement of the last known addresses of the non-signing inventors. Applicant lacks item (1) set forth above.

As to item (1), the applicable statute (35 U.S.C.§ 116) requires that a "diligent effort" have been expended in attempting to find or reach the non-signing inventor. *See* MPEP 409.03(a). The showing currently fails to demonstrate, with a documented showing, that a diligent effort was made to find or locate non-signing inventors Seong, Lee, and Kim, such that the declaration can be accepted under 37 CFR 1.47(a). Where inability to find or locate a named inventor(s) is alleged, a statement of facts should be submitted that fully describes the exact facts which are relied on to establish that a *diligent effort* was made to locate the inventor.

Petitioner has not demonstrated that all efforts were expended in trying to locate the non-signing inventors. The petition states, " Mr. Kujin had made diligent effort (phone calls, and letters) to contact the other three joint inventors: Mr. Poong Hyun Seong, Mr. Seung Jun Lee, and Mr. Jong Hyun Kim. However, they all cannot be reached while they have been away from home and gone for summer vacation at this time period."

Per MPEP 409.03(d): PROOF OF UNAVAILABLITY OR REFUSAL (I): The fact that a nonsigning inventor is on vacation or out of town and is therefore temporarily unavailable to sign the declaration is not an acceptable reason for filing under 37 CFR 1.47(a).

If the non-signing inventors' whereabouts is really unknown, petitioner must expend more effort in attempting to reach them. Petitioner should conduct a search of the regional or national registry(s) for the inventors residing abroad. The results of such search should be made in any future petition for reconsideration. *See* MPEP 409.03(d). Additionally, petitioner should state whether he has access to the inventors' personnel records and, if so, what does inspection of the records reveal as to current addresses, forwarding addresses, or an address of the nearest living relative? What does inspection of phone directories for those address locations reveal? Further, the petition fails to clearly indicate that the patent application and a request that a signed declaration be returned was ever mailed to each inventor's last known address. Petitioner should mail correspondence to the inventors' last known addresses, return receipt and/or forwarding address requested. If forwarding addresses are provided, petitioner should then mail a complete copy of the application papers (specification, claims, drawings, oath, etc.) to the new addresses, return receipt requested, along with a cover letter of instructions which includes a deadline or a statement that no response will constitute a refusal. This sort of ultimatum lends support to a finding of refusal by conduct. If the papers are returned and all other attempts to locate or reach the inventors, e.g., through personnel records, co-workers, E-mail, the Internet or the telephone, etc., continue to fail, then applicant will have established that the inventors cannot be reached after diligent effort or has refused to join in the application.

It is noted that the petition is signed by a patent agent, not Mr. Kujini Lee, who made the initial efforts to locate the non-signing inventors. **A statements of facts must be signed, where at all possible, by a person having firsthand knowledge of the facts recited therein and should be accompanied by documentary evidence in support of the statement of facts.** It is important that the forthcoming communication contain statements of fact as opposed to conclusions.

If the application papers and declaration are successfully mailed to the non-signing inventors:

Where there is an express or oral refusal, that fact, along with the time and place of the refusal, must be stated in an affidavit or declaration by the party to whom the refusal was made. Where there is a written refusal, a copy of the document(s) evidencing that refusal must be made part of the affidavit or declaration.

When it is concluded by the rule 47 applicant that an omitted inventor's conduct constitutes a refusal, all facts upon which that conclusion is based should be stated in an affidavit or

declaration. If there is documentary evidence to support facts alleged in the affidavit or declaration, such evidence must be submitted.

Whenever an omitted inventor gives a reason for refusing to sign the application oath or declaration, that reason should be stated in the affidavit or declaration.

Further correspondence with respect to this matter should be addressed as follows:

By mail:	Mail Stop PETITIONS Commissioner for Patents Post Office Box 1450 Alexandria, VA 22313-1450
By hand:	Customer Service Window Mail Stop Petitions Randolph Building 401 Dulany Street Alexandria, VA 22314
By fax:	(571) 273-8300 ATTN: Office of Petitions

Telephone inquiries should be directed to the undersigned at (571) 272-3230.

Shirene Willis Brantley

Shirene Willis Brantley
Senior Petitions Attorney
Office of Petitions

UNITED STATES PATENT AND TRADEMARK OFFICE

COMMISSIONER FOR PATENTS
UNITED STATES PATENT AND TRADEMARK OFFICE
P.O. BOX 1450
ALEXANDRIA, VA 22313-1450
www.uspto.gov

Patterson, Thuente,
Skaar & Christensen, P.A.
4800 IDS Center
80 South 8th Street
Minneapolis, MN 55402-2100

COPY MAILED

FEB 10 2005

OFFICE OF PETITIONS

In re Application of :
Mary L. Schwebel :
Application No. 10/645,718 : ON PETITION
Filed: August 21, 2003 :
Attorney Docket Number: :
3031.01US02 :

This is a decision on the Petition for Revival of Abandoned Application, filed November 12, 2004. The petition is properly treated under 37 CFR 1.137(b).

This Petition is hereby **granted**.

The above-identified application became abandoned for failure to timely and properly reply to the Notice of Allowance and Issue Fee Due, mailed June 6, 2004. The Notices set a non-extendable three (3) month period for reply. No reply having been received, the application became abandoned on September 7, 2004. A Notice of Abandonment was mailed on October 21, 2004.

With the instant petition, Applicant has satisfied the requirements of a grantable petition under 37 CFR 1.137(a). The issue fee is filed with the instant petition. Accordingly, the petition is granted.

This application is being referred to Publishing Division for processing into a patent.

Telephone inquiries concerning this decision should be directed to the undersigned at (571) 272-3232.

Derek L. Woods
Attorney/Advisor
Office of Petitions

UNITED STATES PATENT AND TRADEMARK OFFICE

Commissioner for Patents
United States Patent and Trademark Office
P.O. Box 1450
Alexandria, VA 22313-1450
www.uspto.gov

BLAKELY SOKOLOFF TAYLOR & ZAFMAN
12400 WILSHIRE BOULEVARD, 7TH FLOOR
LOS ANGELES, CA 90025-1030

COPY MAILED

JAN 19 2006

OFFICE OF PETITIONS

In re Application of :
Jodi Rascoe :
Application No. 10/645,731 : DECISION GRANTING PETITION
Filed: August 18, 2003 : UNDER 37 CFR 1.313(c)(2)
Attorney Docket No. 6688P001 :

This is a decision on the petition, filed January 11, 2006, under 37 CFR 1.313(c)(2) to withdraw the above-identified application from issue after payment of the issue fee.

The petition is **GRANTED**.

The above-identified application is withdrawn from issue for consideration of a submission under 37 CFR 1.114 (request for continued examination). See 37 CFR 1.313(c)(2).

Petitioner is advised that the issue fee paid on November 14, 2005 in the above-identified application cannot be refunded. If, however, the above-identified application is again allowed, petitioner may request that it be applied towards the issue fee required by the new Notice of Allowance.[1]

Telephone inquiries should be directed to the undersigned at (571) 272-3218.

This matter is being referred to Technology Center AU 3765 for processing of the request for continued examination under 37 CFR 1.114 and for consideration of the Information Disclosure Statement.

Frances Hicks
Petitions Examiner
Office of Petitions

---

[1] *The request to apply the issue fee to the new Notice may be satisfied by completing and returning the new Issue Fee Transmittal Form PTOL-85(b) (along with any balance due at the time of payment), which includes the following language thereon: "Commissioner for Patents is requested to apply the Issue Fee and Publication Fee (if any) or re-apply any previously paid issue fee to the application identified above." Petitioner is advised that, whether a fee is indicated as being due or not, the Issue Fee Transmittal Form* ***must*** *be completed and timely submitted to avoid abandonment. Note the language in bold text on the first page of the Notice of Allowance and Fee(s) Due (PTOL-85).*

BLAKELY SOKOLOFF TAYLOR & ZAFMAN LLP

TELEPHONE: (310) 207-3800

INTELLECTUAL PROPERTY LAW
12400 WILSHIRE BOULEVARD, 7TH FLOOR
LOS ANGELES, CA 90025

FACSIMILE: (310) 820-5988

FAX RECEIVED

JAN 1 1 2006

OFFICE OF PETITIONS

FACSIMILE COVER SHEET

Deliver to: Gary L. Welch Art Group: 3765

Company Name: USPTO

Facsimile No.: (571) 273-0025 Date: January 11, 2006

From: Steven Laut, Reg. No. 47,736

Our Docket No.: 6688P001 Number of pages 2 including this sheet.

Application: 10/645,731 Filing Date: 8/18/2003

Subject

NOTICE OF PETITION TO WITHDRAW FROM ISSUE

Remarks

Confidentiality Note: The documents accompanying this facsimile transmission contain information from the law firm of Blakely, Sokoloff, Taylor & Zafman which is confidential or privileged. The information is intended to be for the use of the individual or entity named on this transmission sheet. If you are not the intended recipient, be aware that any disclosure, copying, distribution or use of the contents of this faxed information is prohibited. If you have received this facsimile in error, please notify us by telephone immediately so that we can arrange for the retrieval of the original documents at no cost to you.

If you do not receive all the pages, or if there is any difficulty in receiving, please call: (310) 207-3800 and ask for Jean Svoboda.

Atty. Docket No. 006688.P001

IN THE UNITED STATES PATENT AND TRADEMARK OFFICE

In Re Application of:	
Jodi Rascoe	Art Unit: 3765
Application No.: 10/645,731	Examiner: Gary L. Welch
Filed: August 18, 2003	
For: **BEADING TOOL AND METHOD**	

FAX RECEIVED
JAN 11 2006
OFFICE OF PETITIONS

NOTICE OF PETITION TO WITHDRAW FROM ISSUE

Office of Petitions
P. O. Box 1450
Alexandria, VA 22313-1450

This facsimile is to give notice that a Petition to withdraw from issue under 37 CFR 1.313(c) was filed today, January 11, 2006 by express mail. Also, a request for continuation and a continuation application was filed as well. Applicant is also filing an information disclosure statement with a prior art reference that was brought to our attention today.

Respectfully submitted,

BLAKELY, SOKOLOFF, TAYLOR, & ZAFMAN LLP

Dated: January 11, 2006

By: _____
Steven Laut, Reg. No. 47,736

12400 Wilshire Boulevard
Seventh Floor
Los Angeles, California 90025
(310) 207-3800

CERTIFICATE OF FACSIMILE TRANSMISSION

I hereby certify that this paper is being facsimile transmitted to the Patent and Trademark Office, Commissioner for Patents, Post Office Box 1450, Alexandria, Virginia 22313-1450, on January 11, 2006.

_____
Jean Svoboda

****
*** RX REPORT ***
****

RECEPTION OK

TX/RX NO	9648
RECIPIENT ADDRESS	3108205988
DESTINATION ID	
ST. TIME	01/11 17:57
TIME USE	00'27
PGS.	2
RESULT	OK

UNITED STATES PATENT AND TRADEMARK OFFICE

UNITED STATES DEPARTMENT OF COMMERCE
United States Patent and Trademark Office
Address: COMMISSIONER FOR PATENTS
P.O. Box 1450
Alexandria, Virginia 22313-1450
www.uspto.gov

BAKER BOTTS L.L.P.
2001 ROSS AVENUE
SUITE 600
DALLAS, TX 75201-2980

Mail Date: 05/06/2010

Applicant	: Shaher A. Ahmad	: DECISION ON REQUEST FOR
Patent Number	: 7662157	: RECALCULATION of PATENT
Issue Date	: 02/16/2010	: TERM ADJUSTMENT IN VIEW
Application No	: 10/645,739	: OF WYETH AND NOTICE OF INTENT TO
Filed	: 08/21/2003	: ISSUE CERTIFICATE OF CORRECTION
		:

The Request for Recalculation is **GRANTED** to the extent indicated.

The patent term adjustment has been determined to be **1032** days. The USPTO will *sua sponte* issue a certificate of correction reflecting the amount of PTA days determined by the recalculation.

Prior to the issuance of the certificate of correction, the USPTO will afford patentee an opportunity to be heard and request reconsideration. Accordingly, patentee has **one month or thirty (30) days**, whichever is longer, to file a request for reconsideration of this patent term adjustment calculation. See 35 U.S.C. 154(b)(3)(B)(ii) and 37 CFR 1.322(a)(4). No extensions of time will be granted under 37 CFR 1.136.

Patentee should use document code PET.OP if electronically filing a request for reconsideration of this patent term adjustment calculation. The patentee must also include the information required by 37 CFR 1.705(b)(2) and the fee required by 37 CFR 1.18(e). If patentee does not file a timely request for reconsideration of this patent term adjustment calculation including the information required by 37 CFR 1.705(b)(2) and the fee required by 37 CFR 1.18(e), the USPTO will issue a certificate of correction reflecting the PTA determination noted above.

Patentee should be aware that in order to preserve the right to review in the United States District Court for the District of Columbia of the USPTO patent term adjustment determination, patentee must ensure that he or she also take the steps required under 35 U.S.C. 154(b)(4)(A) in a timely manner. Nothing in the request for recalculation should be construed as providing an alternative time frame for commencing a civil action under 35 U.S.C. 154(b)(4)(A).

Any questions concerning this decision should be directed to the Office of Patent Legal Administration at 571-272-7702.

SPE RESPONSE FOR CERTIFICATE OF CORRECTION

Paper No.: 7/7/08

DATE : 2/11/07

TO SPE OF : ART UNIT 3736

SUBJECT : Request for Certificate of Correction on Patent No.: 7125386

A response is requested with respect to the accompanying request for a certificate of correction.

Please complete this form and return with file, within 7 days to:
Palm location **7580, Certificates of Correction Branch – South Tower – 9A22**
If response is for an IFW, **return to employee (named below) via PUBSCofC Team in MADRAS.**
With respect to the change(s) requested, correcting Office and/or Applicant's errors, should the patent read as shown in the certificate of correction (COCIN)? No new matter should be introduced, nor should the scope or meaning of the claims be changed.

Valerie Jackson

Thank You For Your Assistance

Certificates of Correction Branch
Tel. No. 703-308-9390 ext. 114

Serial No. 10/645,752

The request for issuing the above-identified correction(s) is hereby:
Note your decision on the appropriate box.

☐ **Approved**	All changes apply.
☒ **Approved in Part**	Specify below which changes **do not** apply.
☐ **Denied**	State the reasons for denial below.

Comments:

The change to column 7 is approved.

The changes to column 12 are not approved. A multiple dependent claim cannot depend from another multiple dependent claim.

Hindenburg
SPE

3736
Art Unit

PTO/SB/44 (04-05)
Approved for use through 04/30/2007. OMB 0651-0033
U.S. Patent and Trademark Office; U.S. DEPARTMENT OF COMMERCE
Under the Paperwork Reduction Act of 1995, no persons are required to respond to a collection of information unless it displays a valid OMB control number.
(Also Form PTO 1050)

UNITED STATES PATENT AND TRADEMARK OFFICE
CERTIFICATE OF CORRECTION

PATENT NO. : 7,125,386 B2

APPLICATION NO.: 10/645,752

ISSUE DATE : October 24,2006

INVENTOR(S) : Yasuhiro Kasahara

It is certified that an error appears or errors appear in the above-identified patent and that said Letters Patent is hereby corrected as shown below:

approved MM

Column 7

line 51, delete "(%){(measured" and insert instead --(%)={(measured--

not approved MM

~~Column~~ 12

line 20, delete "claim 1 in which" and insert instead --claim 1 or 2 to 3 in which--

~~Column~~ 12

line 24, delete "claim 1 in which" and insert instead --claim 1 or 2 to 4 in which--

~~Column~~ 12

line 28, delete "claim 1 in which", and insert instead --claim 1 or 2 to 5 in which--

Howard N. Sommers
Fulwider Patton LLP
6060 Center Drive, 10th Floor
Los Angeles, CA 90045

JAN 18 2007

This collection of information is required by 37 CFR 1.322 and 1.324. The information is required to obtain or retain a benefit by the public which is to file (and by the USPTO to process) an application. Confidentiality is governed by 35 U.S.C. 122 and 37 CFR 1.14. This collection is estimated to take 1.0 hour to complete including gathering, preparing, and submitting the completed application form to the USPTO. Time will vary depending upon the individual case. Any comments on the amount of time you require to complete this form and/or suggestions for reducing the burden, should be sent to the Chief of Information Officer, U.S. Patent and Trademark Office, U.S. Department of Commerce, P.O. Box 1450 Alexandria, VA 22313-1450. DO NOT SEND FEES OR COMPLETED FORM TO THIS ADDRESS. **SEND TO: Attention Certificate of Corrections Branch, Commissioner of Patents P.O. Box 1450 Alexandria, VA 22313-1450**

If you need assistance in completing the form, call 1-800-PTO-9199 and select option 2.

UNITED STATES PATENT AND TRADEMARK OFFICE

Commissioner for Patents
United States Patent and Trademark Office
P.O. Box 1450
Alexandria, VA 22313-1450
www.uspto.gov

FULWIDER PATTON
6060 CENTER DRIVE
10TH FLOOR
LOS ANGELES, CA 90045

COPY MAILED

AUG 14 2006

OFFICE OF PETITIONS

In re Application of :
Machold, et al. :
Application No. 10/645,755 : ON PETITION
Filed: August 20, 2003 :
Attorney Docket No.:RADME-65147 :

This is a decision on the petition under 37 CFR 1.182, filed December 22, 2003, requesting that the above-identified application retain the presently accorded filing date with page 55 of the specification, as part of the original disclosure.

The petition is **dismissed**.

On August 20, 2003, the above-identified application was filed. However, on November 17, 2003, the Office of Initial Patent Examination mailed a "Notice of Omitted Items of Nonprovisional Application", stating that application had been accorded a filing date of August 20, 2003, and advising applicant that page 55 of the specification appeared to have been omitted.

In response, on December 22, 2003, applicant filed the present petition. Applicant argues that the instant application is a divisional of a prior filed application and that the instant application incorporated by reference the entirety of the prior application, which page 55 of the specification, therefore, the instant application was complete on filing.

The Notice permits applicant to either: (1) promptly establish prior receipt in the Office of the items at issue (generally by way of a date-stamped postcard receipt (MPEP 503)), or (2) promptly submit the omitted items and accept the date of such submission as the application filing date. An applicant asserting that the missing items were in fact deposited in the Office with the application papers must file a petition (and the appropriate petition fee) with evidence of such deposit. An applicant desiring to submit the omitted items in a nonprovisional application and accept the date of such submission as the application filing date must file any omitted items with an oath or declaration in compliance with 37 CFR 1.63 and 1.64 referring to such omitted items and a petition under 37 CFR 1.182 (with the petition fee under 37 CFR 1.17(h) requesting the later filing date within two months of the date of the Notice (37 CFR 1.181(f)).

An applicant may incorporate by reference the prior application by including in the application-as-filed, a statement that such specifically enumerated prior application or applications are hereby incorporated by reference. The statement may appear in the specification or in the application transmittal letter. The inclusion of this incorporation by reference of the prior applications(s) will permit an applicant to amend the divisional application to include any subject matter in such prior application(s), without the need for a petition. See MPEP 201.06(c).

In view of the incorporation by reference of the prior application, page 55 is not new matter if it was a part of the disclosure of the prior application. Prior to the first action on the merits, petitioner should file a preliminary amendment requesting entry of page 55 of the specification.

The application is being returned to the Office of Initial Patent Examination for further processing with a filing date of August 20, 2003, using only the application papers present on filing.

The application is being returned to the Office of Initial Patent Examination for further processing with a filing date of August 20, 2003.

Telephone inquiries concerning this decision may be directed to the undersigned at (571) 272-3222.

Kenya A. McLaughlin
Petitions Attorney
Office of Petitions

UNITED STATES PATENT AND TRADEMARK OFFICE

Commissioner for Patents
United States Patent and Trademark Office
P.O. Box 1450
Alexandria, VA 22313-1450
www.uspto.gov

12-11-09

Patent No. : Re.39,603E
Ser. No. : 10/645,782
Inventor(s) : Keiiciro Kata, et. al.
Issued : May 1, 2007
Title : APROCESS FOR MANUFACTRUING SEMICONDUCTOR DEVICE AND SEMICONDUCTOR WAFER
Docket No. : 069974-0143
Re: Request for Certificate of Correction

Consideration has been given your request for the issuance of a certificate of correction for the above-identified patent under the provisions of Rule(s) 1.322.

Assignees' names and addresses (assignment data) printed in a patent, are based *solely* on information supplied in the appropriate space for identifying the assignment data, i.e., item 3 of the Issue Fee Transmittal Form PTOL-85B. Granting of a request under 37 CFR 3.81(b) is required to correct applicant's error providing ***incorrect or erroneous*** assignment data, *before* issuance of a Certificate of Correction, under 37 CFR 1.323 *(see Manual of Patent Examining Procedures (M.P.E.P) Chp.1400, sect. 1481).* This procedure is required *at any time after the issue fee is paid*, including after issuance of the patent.

In view of the foregoing, your request, in this mater, is hereby denied.

A request to correct the Assignee under 37 CFR 3.81(b) should include:

A. **the processing fee set forth in 37 CFR 1.117(h) (currently $130);**
B. a statement that the failure to include the correct assignee name on the PTOL-85B was inadvertent; and
C. a copy of the Notice of Recordation of Assignment Document, reflecting the reel and frame number where the assignment(s) is recorded and/or reflecting proof of *the date* the assignment was submitted for recordation.

In the Request, Applicant(s) may request that the file be forwarded to Certificates of Correction Branch, for issuance of a Certificate of Correction, if the Request is granted.

Any request under 37 CFR 3.81(b) should be directed to the following address or facsimile number:

By mail: Mail Stop PETITIONS
Commissioner for Patents
Post Office Box 1450
Alexandria, VA 22313-1450

By hand: Customer Service Window
Mail Stop Petitions
Randolph Building
401 Dulany Street
Alexandria, VA 22314

By fax: (703) 872-9306
ATTN: Office of Petitions

If a fee (currently $100) was previously submitted for consideration of a Request for Certificate of Correction, under CFR 1.323, to correct assignment data, , no additional fee is required.

Eva James
For Mary Diggs
Decisions & Certificates
of Correction Branch
(703) **308-9390 ext. 124** or 125

Washington Harbour
3000 K Street NW, Suite 500
Washington, DC 20007-5143

ej

UNITED STATES PATENT AND TRADEMARK OFFICE

Commissioner for Patents
United States Patent and Trademark Office
P.O. Box 1450
Alexandria, VA 22313-1450
www.uspto.gov

FOLEY AND LARDNER LLP
SUITE 500
3000 K STREET NW
WASHINGTON DC 20007

COPY MAILED

JUN 0 2 2008

OFFICE OF PETITIONS

In re Patent No. RE39,603 :
Issue Date: May 1, 2007 :
Application No. 10/645,782 : ON PETITION
Filed: August 22, 2003 :
Attorney Docket No. 069974-0143 :

This is a decision on the petition filed February 8, 2008, which is being treated as a request under 37 CFR 3.81(b)[1] to correct the name of the assignee on the front page of the above-identified patent by way of a Certificate of Correction.

The request is **GRANTED**.

Telephone inquiries concerning this decision may be directed to Carl Friedman at (571) 272-6842. Inquiries regarding the issuance of a certificate of correction should be directed to the Certificate of Correction Branch at (571) 272-4200.

The Certificates of Correction Branch will be notified of this decision granting the petition under 37 CFR 3.81(b) and directing issuance of the requested Certificate of Correction.

Carl Friedman
Petitions Examiner
Office of Petitions

[1] *See* MPEP 1309, subsection II; and Official Gazette of June 22, 2004.

UNITED STATES PATENT AND TRADEMARK OFFICE

Commissioner for Patents
United States Patent and Trademark Office
P.O. Box 1450
Alexandria, VA 22313-1450
www.uspto.gov

AMGEN INC.
MAIL STOP 28-2-C
ONE AMGEN CENTER DRIVE
THOUSAND OAKS CA 91320-1799

COPY MAILED

MAR 25 2008

OFFICE OF PETITIONS

In re Application of :
Ulrich FEIGE et al. :
Application No. 10/645,784 : DECISION ON PETITION
Filed: August 18, 2003 :
Attorney Docket No. A-527E :

This is a decision on the petition under the unintentional provisions of 37 CFR 1.137(b), filed October 17, 2007, to revive the above-identified application.

The petition is **GRANTED**.

The application became abandoned for failure to timely file a reply within the meaning of 37 CFR 1.113 to the final Office action of February 07, 2007. The proposed reply required for consideration of a petition to revive must be a Notice of Appeal (and appeal fee required by 37 CFR 41.20(b)(2), an amendment that *prima facie* places the application in condition for allowance, a Request for Continued Examination and submission (37 CFR 1.114), or the filing of a continuing application under 37 CFR 1.53(b). See MPEP 711.03(c)(III)(A)(2). A three (3) extensions of time pursuant to the provisions of 37 CFR 1.136(a) was obtained. Accordingly, the date of abandonment of this application is August 08, 2007.

The petition satisfies the requirements of 37 CFR 1.137(b) in that petitioner has supplied (1) the reply in the form of a Request for Continued Examination (RCE) and fee of $810.00, and the submission required by 37 CFR 1.114; (2) the petition fee of $1,540.00; and (3) a proper statement of unintentional delay.

The Office acknowledges the notice of appeal filed with the petition and request for continued examination (RCE) on October 17, 2007. However, the RCE withdraws the appeal, which was substantially not needed. Accordingly, the petitioners deposit account no. 01-0519 is being credited the notice of appeal fee of $510.00.

Telephone inquiries concerning this decision should be directed to the undersigned at (571) 272-4231.

This application is being referred to Technology Center AU 1639 for processing of the RCE and for appropriate action by the Examiner in the normal course of business on the amendment submitted in accordance with 37 CFR 1.114.

Michelle R. Eason
Paralegal Specialist
Office of Petitions

SPE RESPONSE FOR CERTIFICATE OF CORRECTION

DATE : 11-17-09 Paper No.: _____

TO SPE OF : ART UNIT 1639

SUBJECT : Request for Certificate of Correction for Appl. No.: 10645784 Patent No.: 7488590

Please respond to this request for a certificate of correction within 7 days.

FOR IFW FILES:

Please review the requested changes/corrections as shown in the **COCIN** document(s) in the IFW application image. No new matter should be introduced, nor should the scope or meaning of the claims be changed.

Please complete the response (see below) and forward the completed response to scanning using document code **COCX**.

FOR PAPER FILES:

Please review the requested changes/corrections as shown in the attached certificate of correction. Please complete this form (see below) and forward it with the file to:

Certificates of Correction Branch (CofC)
Randolph Square – 9D10-A
Palm Location 7580

Valerie Jackson
Certificates of Correction Branch
703-756-1573

Thank You For Your Assistance

The request for issuing the above-identified correction(s) is hereby:

Note your decision on the appropriated box.

■ **Approved**	All changes apply.
☐ **Approved in Part**	Specify below which changes **do not** apply.
☐ **Denied**	State the reasons for denial below.

Comments:

The request for certificate of correction of inventorship is granted.

/ Christopher S. F. Low /
Supervisory Patent Examiner, Art Unit 1639

UNITED STATES PATENT AND TRADEMARK OFFICE

COMMISSIONER FOR PATENTS
UNITED STATES PATENT AND TRADEMARK OFFICE
P.O. BOX 1450
ALEXANDRIA, VA 22313-1450
www.uspto.gov

OBLON, SPIVAK, MCCLELLAND,
MAIER & NEUSTADT, P.C.
1940 DUKE STREET
ALEXANDRIA ,VA 22314

COPY MAILED

MAR 3 1 2004

OFFICE OF PETITIONS

In re Application of :
Tomita, et al. :
Application No. 10/645,804 : ON PETITION
Filed: August 22, 2003 :
Attorney Docket No.: 241833US0 :

This is a decision on the petition filed January 20, 2004, titled "Petition under 37 CFR 1.53(e)". Petitioner is advised that the petition will be treated as request to vacate the language that speaks to omitted items in the "Notice to File Missing Parts of Nonprovisional Application" mailed November 19, 2003, in the above-cited application.

The petition is **dismissed**.

On August 22, 2003, the above-identified application was filed. However, on November 19, 2003, the Office of Initial Patent Examination mailed a "Notice to File Missing Parts of Nonprovisional Application," stating that application had been accorded a filing date of August 22, 2003, and advising applicant that Figures 2 through 12 as described in the specification appeared to have been omitted. The notice also set a two month period for reply relative to the alleged omitted items and indicated that the two month period for reply was not extendable.

In response, on January 20, 2004, applicant filed the present petition and a $130.00 petition fee, copies Figures 2 through 12, and a copy of an Office date-stamped postcard receipt acknowledging receipt of 8 sheets of drawings on August 22, 2003, among other items. No certificate of mailing under 37 CFR 1.8 was found among the petition papers.

Relative to the alleged omitted items, the "Notice to File Missing Parts of Nonprovisional Application" permitted applicant to either: (1) promptly establish prior receipt in the Office of the items at issue (generally by way of a date-stamped postcard receipt (MPEP 503)), or (2) promptly submit the omitted items and accept the date of such submission as the application filing date. The notice further indicates that:

> [t]he failure to file a petition (and petition fee) under the above options (I) or (II) within TWO MONTHS of the date of this Notice (37 CFR 1.181(f)) will be treated as a constructive acceptance by the applicant of the application as deposited in the **USPTO. THIS TWO MONTH PERIOD IS NOT EXTENDABLE UNDER 37 CFR 1.136(a) or (b).** In the absence of timely filed petition in reply to this Notice, the application will maintain a filing date as of the date of deposit of the application in the USPTO, and original application papers (i.e., the original disclosure of the invention) will include only those application papers present in the USPTO on the date of deposit.

The instant petition was not timely filed as the two month period set for reply to expired at midnight on January 19, 2004; the petition dismissed, accordingly.

Petitioner should file a preliminary amendment correcting the inconsistencies in the application prior to the first Office action.

The declaration filed January 20, 2004, is noted. In order for the declaration to be considered timely file, an extension of time within the first month is necessary. Deposit account 15-0030 will be charged $110.00 for the extension of time within the first month.

The application is being returned to the Office of Initial Patent Examination for further processing with a filing date of August 22, 2003, using the application papers filed on that date.

Telephone inquiries concerning this matter may be directed to the undersigned at (703) 305-0010.

Kenya A. McLaughlin
Petitions Attorney
Office of Petitions

UNITED STATES PATENT AND TRADEMARK OFFICE

COMMISSIONER FOR PATENTS
UNITED STATES PATENT AND TRADEMARK OFFICE
P.O. BOX 1450
ALEXANDRIA, VA 22313-1450
www.uspto.gov

OBLON, SPIVAK, MCCLELLAND,
MAIER & NEUSTADT, P.C.
1940 Duke Street
Alexandria, VA 22314

COPY MAILED

APR 0 6 2004

OFFICE OF PETITIONS

In re Application of :
Tomita, et al. :
Application No. 10/645,804 : DECISION GRANTING PETITION
Filed: August 22, 2003 :
Attorney Docket No. 241833US0 :

This is a decision on the petition filed January 20, 2004, titled "Petition under 37 CFR 1.53(e)". Petitioner is advised that the petition will be treated as request to vacate the language that speaks to omitted items in the "Notice to File Missing Parts of Nonprovisional Application" mailed November 19, 2003, in the above-cited application.

The petition is **granted**.

The decision mailed March 31, 2004, dismissing the instant petition is vacated.

On August 22, 2003, the above-identified application was filed. However, on November 19, 2003, the Office of Initial Patent Examination mailed a "Notice to File Missing Parts of Nonprovisional Application," stating that application had been accorded a filing date of August 22, 2003, and advising applicant that Figures 2 through 12 as described in the specification appeared to have been omitted. The notice also set a two month period for reply relative to the alleged omitted items and indicated that the two month period for reply was not extendable.

In response, on January 20, 2004, applicant filed the present petition and a $130.00 petition fee, copies Figures 2 through 12, and a copy of an Office date-stamped postcard receipt acknowledging receipt of 8 sheets of drawings on August 22, 2003, among other items. The response of January 20, 2004, was timely filed because January 19, 2004, was a federal holiday.

Upon review of the record, Figures 2-12 of the drawings were not located among the application papers. However, the evidence is convincing that the application papers deposited August 22, 2003, included Figures 2-12, which were subsequently misplaced by the Office. Therefore, the application, including Figures 2-12 as described in the specification, was complete on filing and entitled to the presently accorded filing date of August 22, 2003.

Accordingly, the petition is granted; the language in the Notice relative to the omitted figures is vacated, accordingly.

The application file is being returned to the Office of Initial Patent Examination for further processing

with the presently accorded filing date of August 22, 2003, using the eight sheets of drawings filed August 22, 2003.

Deposit account 15-0030 will be refunded $110.00 for the extension of time fee that was incorrectly charged and a treasury check in the amount of $130.00 will be issued for the petition fee.

Any inquiries related to this decision should be directed to the undersigned at (703)305-0010

Kenya McLaughlin

Kenya A. McLaughlin
Petitions Attorney
Office of Petitions

UNITED STATES PATENT AND TRADEMARK OFFICE

Commissioner for Patents
United States Patent and Trademark Office
P.O. Box 1450
Alexandria, VA 22313-1450
www.uspto.gov

TOWNSEND, TOWNSEND and CREW, LLP
TWO EMBARCADERO CENTER, 8TH FLOOR
SAN FRANCISCO, CALIFORNIA 94111-3834

MAILED

APR 0 4 2005

Technology Center 2100

In re Application of : NAKATANI ET AL.
Application No. 10/645,813
Filed: AUGUST 20, 2003
For: METHOD FOR ACCESSING DISTRIBUTED FILE SYSTEM

DECISION ON PETITION FOR ACCELERATED EXAMINATION UNDER M.P.E.P.§708.02(VIII) & 37 C.F.R. 102(d)

This is a decision on the petition filed January 25, 2005 under 37 C.F.R. 102(d) and M.P.E.P. § 708.02(VIII): Accelerated Examination, to make the above-identified application special.

The Petition is **GRANTED**.

M.P.E.P. § 708.02, Section VIII which sets out the prerequisites for a grantable petition for Accelerated Examination under 37 C.F.R. § 102(d) states in relevant part:

> A new application (one which has not received any examination by the examiner) may be granted special status provided that applicant (and this term includes applicant's attorney or agent) complies with each of the following items:

(a) Submits a petition to make special accompanied by the fee set forth in 37 CFR 1.17(h);

(b) Presents all claims directed to a single invention, or if the Office determines that all the claims presented are not obviously directed to a single invention, will make an election without traverse as a prerequisite to the grant of special status;

(c) Submits a statement(s) that a pre-examination search was made, listing the field of search by class and subclass, publication, Chemical Abstracts, foreign patents, etc. The pre-examination search must be directed to the invention as claimed in the application for which special status is requested. A search made by a foreign patent office satisfies this requirement;

(d) Submits one copy each of the references deemed most closely related to the subject matter encompassed by the claims if said references are not already of record; and

(e) Submits a detailed discussion of the references, which discussion points out, with the particularity required by 37 CFR 1.111 (b) and (c), how the claimed subject matter is patentable over the references.

Petition to Make Special **GRANTED** since all of the requirements for special status under MPEP § 708.02(VIII) have been met.

The application file is being forwarded to the Examiner for accelerated examination in accordance with the procedures set forth in M.P.E.P. §708.02, Section VIII. If the application is subsequently allowed, it will be given priority for printing. See M.P.E.P. §1309.

Brian L. Johnson 3/31/05
Special Program Examiner
Technology Center 2100
Computer Architecture, Software and Information Security
571-272-3595

JC

UNITED STATES PATENT AND TRADEMARK OFFICE

COMMISSIONER FOR PATENTS
UNITED STATES PATENT AND TRADEMARK OFFICE
P.O. BOX 1450
ALEXANDRIA, VA 22313-1450
www.uspto.gov

TERRELL P. LEWIS
UNIT #8
343 PALOS VERDES BOULEVARD
REDONDO BEACH CA 90277

COPY MAILED

FEB 12 2007

OFFICE OF PETITIONS

In re Application of :
PRATHER et al :
Application No.: 10/645,820 : DECISION ON PETITION
Filing Date: August 18, 2003 : UNDER 37 CFR 1.137(b)
Attorney Docket No.: MW015 :

This is a decision on the petition under 37 CFR 1.137(b), filed September 6, 2006, to revive the above-identified application.

The petition is **GRANTED.**

The above-identified application became abandoned for failure to reply in a timely manner to the non-final Office action mailed February 2, 2006, which set a shortened statutory period for reply of three (3) months. No extensions of time under the provisions of 37 CFR 1.136(a) were obtained. Accordingly, by operation of law, the above-identified application became abandoned on March 2, 2006.

The petition satisfies the conditions for revival pursuant to the provisions of 37 CFR 1.137(b) in that (1) the reply in the form of an amendment and arguments; (2) the petition fee; and (3) the required statement of unintentional delay have been received. Accordingly, the reply to the non-final Office action mailed September 6, 2006 is accepted as having been unintentionally delayed.

The Notice of Abandonment mailed 07 September 2006 is hereby VACATED.

This application is being referred to Technology Center AU 3618 for appropriate action on the reply in due course.

Telephone inquiries concerning this decision should be directed to the undersigned at (571) 272-3301.

Daniel Stemmer
Legal Examiner
Office of the Deputy Commissioner
for Patent Examination Policy

UNITED STATES PATENT AND TRADEMARK OFFICE

Commissioner for Patents
United States Patent and Trademark Office
P.O. Box 1450
Alexandria, VA 22313-1450
www.uspto.gov

TOWNSEND AND TOWNSEND AND CREW, LLP
TWO EMBARCADERO CENTER
EIGHTH FLOOR
SAN FRANCISCO, CA 94111-3834

COPY MAILED

SEP 28 2007

OFFICE OF PETITIONS

In re Application of

Graham, et al. :

Application No. 10/645,821

: DECISION ON PETITION

Filed: August 20, 2003

:

Attorney Docket No. 015358-006520US

This is a decision on the petition under 37 CFR 1.137(b), filed September 12, 2007, to revive the above-identified application.

The petition is **GRANTED**.

The above-cited application became abandoned for failure to reply in a timely manner to the non-final Office action mailed March 9, 2007, which set a shortened statutory period for reply of three (3) months from its mailing date. No extension of time pursuant to 37 CFR 1.136(a) was obtained within the allowable period. Accordingly, the application became abandoned on June 10, 2007

The amendment filed September 19, 2007, is noted.

The request for an extension of time within the third month, filed September 19, 2007, is noted but cannot be granted as the request was made outside the maximum statutory period for reply and the application was already in an abandoned status. The amount of $1020.00 will be refunded, in due course.

The application is being forwarded to Technology Center 2100, GAU 2179 for further processing

Telephone inquiries concerning this decision should be directed to the undersigned at (571) 272-3222.

Kenya A. McLaughlin
Petitions Attorney
Office of Petitions

UNITED STATES PATENT AND TRADEMARK OFFICE

COMMISSIONER FOR PATENTS
UNITED STATES PATENT AND TRADEMARK OFFICE
P.O. BOX 1450
ALEXANDRIA, VA 22313-1450
www.uspto.gov

BIRCH STEWART KOLASCH & BIRCH
PO BOX 747
FALLS CHURCH, VA 22040-0747

COPY MAILED

JUL 29 2005

OFFICE OF PETITIONS

In re Application of	:	
Alexandrov, et al.	:	DECISION NOTING JOINDER
Application No. 10/645,822	:	OF INVENTOR AND PETITION
Filed: August 22, 2003	:	UNDER 37 CFR 1.47(a) MOOT
Atty. Dkt. No.: 2750-1571P	:	

This decision is in response to the petition under 37 CFR 1.47(a), filed April 21, 2005 and supplemented April 28, 2005.

In view of the joinder of the inventor, further consideration under 37 CFR 1.47(a) is not necessary and the petition is considered to be moot. This application does not have any Rule 1.47(a) status and no such status should appear on the file wrapper. This application need not be returned to this Office for further consideration under 37 CFR 1.47(a).

This application is being forwarded to the Office of Initial Patent Examination for further processing.

Telephone inquiries related to this decision may be directed to the undersigned at (571) 272-3205.

Alesia M. Brown
Petitions Attorney
Office of Petitions

UNITED STATES PATENT AND TRADEMARK OFFICE

Commissioner for Patents
United States Patent and Trademark Office
P.O. Box 1450
Alexandria, VA 22313-1450
www.uspto.gov

BANNER & WITCOFF, LTD.
1100 13th STREET, N.W.
SUITE 1200
WASHINGTON DC 20005-4051

COPY MAILED

FEB 0 4 2008

OFFICE OF PETITIONS

In re Application of :
WITTEN, Mark L. et al. :
Application No. 10/645,839 : DECISION ON PETITION
Filed: August 22, 2003 : TO WITHDRAW
Attorney Docket No. **003413.00008** : FROM RECORD
:

This is a decision on the Request to Withdraw as attorney or agent of record under 37 C.F.R. § 1.36(b), filed October 15, 2007.

The request is **NOT APPROVED** as moot.

A review of the file record indicates that the power of attorney to BANNER & WITCOFF, LTD. has been revoked by the assignee of the patent application on December 19, 2007. Accordingly, the request to withdraw under 37 C.F.R. § 1.36(b) is moot.

All future communications from the Office will continue to be directed to the below-listed address until otherwise notified by applicant.

Telephone inquires concerning this decision should be directed to Tredelle Jackson at 571-272-2783.

Monica A. Graves
Petitions Examiner
Office of Petitions

cc: **JONES DAY**
222 EAST 41ST ST
NEW YORK, NY 10017

UNITED STATES PATENT AND TRADEMARK OFFICE

DEC 14 2006

Commissioner for Patents
United States Patent and Trademark Office
P.O. Box 1450
Alexandria, VA 22313-1450
www.uspto.gov

BARNES & THORNBURG
11 SOUTH MERIDIAN
INDIANAPOLIS, IN 46204

In re Application of	:
Michael R. Duff et al	:
Serial No.: 10/645,844	: PETITION DECISION
Filed: August 22, 2003	:
Attorney Docket No.: 31735/70009	:

This is in response to the petition under 37 CFR 1.144, filed July 1, 2006, requesting withdrawal of an improper restriction requirement.

BACKGROUND

A review of the file history shows that this application was filed under 35 U.S.C. 111 on August 22, 2003, and contained, as amended, claims 41-50. In a first Office action, mailed April 16, 2004, the examiner required restriction between the inventions claimed, as follows:

Group I – Claims 41 and 47-50, drawn to a method of decreasing drowsiness using a towelette impregnated with an organic substance;
Group II – Claims 42 and 44-46, drawn to a method of decreasing drowsiness using a towelette impregnated with ammonia;
Group III – Claim 43, drawn to a method of decreasing drowsiness using a towelette impregnated with an organic substance and ammonia.

The examiner reasoned that the methods were unrelated due to different operation, function and/or effect and are disclosed as capable of separate use..

Applicants replied on April 28, 2004, electing Group III with traverse on the basis that the examiner reasoning does not provide different modes of operation, effect or function.

The examiner mailed a new Office action to applicants on May 27, 2004, acknowledging the election of Group III and the traversal, but maintaining the requirement, and making it Final on the basis that although the claims seem to be overlapping the search would not be coextensive. The examiner then rejected claim 43 under 35 U.S.C. 112, first paragraph, as lacking written description and under 35 U.S.C. 103(a) as unpatentable over Furman in view of the Merck Index.

This petition was filed on July 1, 2004, traversing the restriction requirement as being in error. A response to the Office action was filed concurrently. The existence of the petition was not brought to the attention of the deciding official until recently.

DISCUSSION

Applicants' petition is directed to the examiner's reasoning as to why restriction is required in view of the fact that all claims recite an identical set of method steps and differ only in the substances impregnated onto the towelette. The Group I impregnant is an organic substance which releases vapors to stimulate the olfactory nerves. The Group II impregnant is a combination of an organic substance and ammonia to stimulate both skin and olfactory nerves. The Group III impregnant is ammonia and specific organic substances which are known to emit vapors which stimulate the olfactory nerves as well as skin nerves. Thus contrary to the examiner's assertion, Group II is not limited to just ammonia. Thus the claims of Groups II and III are of similar scope and are hereby rejoined. The claims of Group I specify only the use of an organic substance, but allow due to the "comprising" language of the claim the addition of other stimulating substances, such as ammonia. In view of this and the fact that the active method steps are essentially identical for each Group, the restriction requirement is withdrawn.

DECISION

The petition is **GRANTED.**

The application will be forwarded to the examiner for consideration of applicants' reply filed July 1, 2004, and further action not inconsistent with this decision.

Should there be any questions about this decision please contact William R. Dixon, Jr., by letter addressed to Director, TC 1600, at the address listed above, or by telephone at 571-272-0519 or by facsimile sent to the general Office facsimile number, 571-273-8300.

Bruce M. Kisliuk.
Director, Technology Center 1600

UNITED STATES PATENT AND TRADEMARK OFFICE

Commissioner for Patents
United States Patent and Trademark Office
P.O. Box 1450
Alexandria, VA 22313-1450
www.uspto.gov

MORRISON & FOERSTER LLP
1650 TYSONS BOULEVARD, SUITE 400
MCLEAN, VA 22102

COPY MAILED

JAN 23 2008

OFFICE OF PETITIONS

In re Application of :
LILGE, et al. :
Application No. 10/645,854 : DECISION ON PETITION
Filed: August 22, 2003 : TO WITHDRAW
Attorney Docket No. **449122062200** : FROM RECORD
:

This is a decision on the Request to Withdraw as attorney or agent of record under 37 C.F.R. § 1.36(b), filed May 25, 2007.

The request is **NOT APPROVED** as moot.

A review of the file record indicates that the power of attorney to **MORRISON & FOERSTER LLP** has been revoked by the assignee of the patent application on August 3, 2007. Accordingly, the request to withdraw under 37 C.F.R. § 1.36(b) is moot.

All future communications from the Office will continue to be directed to the below-listed address until otherwise notified by applicant.

Telephone inquires concerning this decision should be directed to the undersigned at 571-272- 7253.

Monica A. Graves
Petitions Examiner
Office of Petitions

cc: **BELL BOYD & LLOYD, LLP**
P.O. BOX 1135
CHICAGO, IL 60690

SPE RESPONSE FOR CERTIFICATE OF CORRECTION

DATE : 7/8/08

Paper No.: —

TO SPE OF : ART UNIT 2112

SUBJECT : Request for Certificate of Correction for Appl. No.: 10/645861 Patent No: 7353438B2

A response is requested with respect to a request for a certificate of correction.

With respect to the change(s) requested to correct Office and/or Applicant's errors, should the patent read as shown in the certificate of correction attached herewith or the COCIN document(s), in IFW images for the above-identified patented application? No new matter should be introduced, nor should the scope or meaning of the claims be changed.

If the response is for an IFW, within 7 days, please complete and forward the response, to the employee (named below) via scanning into application images, using document code **COCX**.

If the response is for a paper file wrapper, please complete the response and forward the response with the paper file wrapper, to the employee (named below), within 7 days, to:

Certificates of Correction Branch (CofC)
South Tower - 9A22
Palm Location 7580

VIRGINIA TOLBERT
Certificates of Correction Branch
703-308-9390 ext. 113

Thank You For Your Assistance

The request for issuing the above-identified correction(s) is hereby:
Note your decision on the appropriate box.

☒ **Approved**	**All** changes apply.
☐ **Approved in Part**	Specify below which changes **do not** apply.
☐ **Denied**	State the reasons for denial below.

Comments: _____

JACQUES LOUIS-JACQUES
SUPERVISORY PATENT EXAMINER
TECHNOLOGY CENTER 2100

2112
Art Unit

UNITED STATES PATENT AND TRADEMARK OFFICE

Commissioner for Patents
United States Patent and Trademark Office
P.O. Box 1450
Alexandria, VA 22313-1450
www.uspto.gov

NOV 24 2004

WILSON SONSINI GOODRICH & ROSATI
650 PAGE MILL ROAD
PALO ALTO CA 94304-1050

In re Application of	:	
Heller et al.	:	
Serial No.: 10/645,863	:	PETITION TO MAKE SPECIAL
Filed: August 20, 2003	:	
Attorney Docket No.: 29191-707	:	

This is in response to applicants' petition filed June 4, 2004, to make the above-identified application special under the provisions of 37 CFR 1.102(d).

Applicants have satisfied the provisions set forth in M.P.E.P. 708.02, VIII. (A), (B), (C), (D), and (E). The $130.00 petition fee as required by 37 CFR 1.17(h) will be charged to applicant's Deposit Account No. 23-2415, as directed. Therefore, the petition is **GRANTED**.

The application will be forwarded the examiner for action on the merits commensurate with this decision.

Should there be any questions with regard to this letter please contact Marianne C. Seidel by letter addressed to the Director, Technology Center 1600, P.O. Box 1450, Alexandria, VA 22313-1450, or by telephone at 571-272-0584 or by facsimile transmission at the general Office facsimile number, (703) 872-9306.

Marianne C. Seidel
Special Program Examiner
Technology Center 1600

UNITED STATES PATENT AND TRADEMARK OFFICE

Commissioner for Patents
United States Patent and Trademark Office
P.O. Box 1450
Alexandria, VA 22313-1450
www.uspto.gov

MAY 13 2005

SHLESINGER, ARKWRIGHT & GARVEY LLP
3000 SOUTH EADS STREET
ARLINGTON VA 22202

In re Application	:	
J. Frank Doenig et al	:	
Serial No.: 10/645.869	:	DECISION ON PETITION
Filed: August 22, 2003	:	
For: Erectile Dysfunction Treatments	:	
Comprising Momentary Vacuum Therapy	:	
Alone Or With Medications	:	

This is in response to applicants' petition filed August 22, 2003 to make the above-identified application special under the provisions of 37 CFR 1.102(c), based on the age of the applicant.

Applicant has satisfied the provisions set forth in M.P.E.P. 708.02, IV. Therefore the petition is **GRANTED**.

The application will be forwarded to the examiner for action on the merits commensurate with this decision.

Should there be any questions with regard to this letter please contact Richard Bertsch by letter addressed to the Director, Technology Center 3700, P.O. Box 1450 Alexandria, VA 22313-1450, or by telephone at (571) 272-3750 or by facsimile transmission at (703) 872-9306.

Richard A. Bertsch, Director
Technology Center 3700

SPE RESPONSE FOR CERTIFICATE OF CORRECTION

Paper No.: _____

DATE : 1/25/05

TO SPE OF : ART UNIT 1625

SUBJECT : Request for Certificate of Correction on Patent No.: 6806370 B2

A response is requested with respect to the accompanying request for a certificate of correction.

Please complete this form and return with file, within **7** days to:
Certificates of Correction Branch - PK 3-915
Palm location **7580** - Tel. No. 305-8309

With respect to the change(s) requested, correcting Office and/or Applicant's errors, should the patent read as shown in the certificate of correction? No new matter should be introduced, nor should the scope or meaning of the claims be changed.

Virginia Tolbert

Thank You For Your Assistance — **Certificates of Correction Branch**

The request for issuing the above-identified correction(s) is hereby:
Note your decision on the appropriate box.

- [X] **Approved** — All changes apply.
- [ ] **Approved in Part** — Specify below which changes **do not** apply.
- [ ] **Denied** — State the reasons for denial below.

Comments:

ERIC NORTHINGTON DAVIS
PRIMARY EXAMINER
Art 1625

Carlin Tsang — SPE

1625 — Art Unit

SPE RESPONSE FOR CERTIFICATE OF CORRECTION

7+

Paper No.: _____

DATE : December 14, 2006

TO SPE OF : ART UNIT 3661

SUBJECT : Request for Certificate of Correction for Appl. No.: 10/645910 Patent No.: 7,110,867 B2

Please respond to this request for a certificate of correction within 7 days.

Please review the requested changes/corrections as shown in the **COCIN** document(s) in the IFW application image. No new matter should be introduced, nor should the scope or meaning of the claims be changed.

Please complete the response (see below) and forward the completed response to scanning using document code **COCX**.

Elisha Evans

Certificates of Correction Branch

703-308-9390 ext. *110*

Thank You For Your Assistance

The request for issuing the above-identified correction(s) is hereby:

Note your decision on the appropriate box.

☒ **Approved**	**All** changes apply.
☐ **Approved in Part**	Specify below which changes **do not** apply.
☐ **Denied**	State the reasons for denial below.

Comments: The request to correct inventorship filed April 29, 2004 should have been granted.

_____

_____

_____

_____ 3661

SPE **Art Unit**

UNITED STATES PATENT AND TRADEMARK OFFICE

COMMISSIONER FOR PATENTS
UNITED STATES PATENT AND TRADEMARK OFFICE
P.O. BOX 1450
ALEXANDRIA, VA 22313-1450
www.uspto.gov

MARGER JOHNSON & MCCOLLOM, P.C.
210 SW MORRISON STREET, SUITE 400
PORTLAND, OR 97204

COPY MAILED
SEP 18 2006
OFFICE OF PETITIONS

In re Application of :
David P. Oran :
Application No. 10/645,919 : ON PETITION
Filed: August 20, 2003 :
Attorney Docket No.: 2705-294 :

This is a decision on the petition, filed September 15, 2006, under 37 CFR 1.313(c)(2) to withdraw the above-identified application from issue after payment of the issue fee.

The petition is **GRANTED**.

The above-identified application is withdrawn from issue for consideration of a submission under 37 CFR 1.114 (request for continued examination). See 37 CFR 1.313(c)(2).

Petitioner is advised that the issue fee paid on February 1, 2006, in the above-identified application cannot be refunded. If, however, the above-identified application is again allowed, petitioner may request that it be applied towards the issue fee required by the new Notice of Allowance. [1]

Telephone inquiries relating to this decision should be directed to the undersigned at (571) 272-3204.

The application is being referred to Technology Center AU 2614 for further processing of the request for continued examination under 37 CFR 1.114.

Sherry D. Brinkley
Petitions Examiner
Office of Petitions

[1]The request to apply the issue fee to the new Notice may be satisfied by completing and returning the new Issue Fee Transmittal Form PTOL-85(b), which includes the following language thereon: " Commissioner for Patents is requested to apply the Issue Fee and Publication Fee (if any) or re-apply any previously paid issue fee to the application identified above." Petitioner is advised that, whether a fee is indicated as being due or not, the Issue Fee Transmittal Form must be completed and timely submitted to avoid abandonment. Note the language in bold text on the first page of the Notice of Allowance and Fee(s) Due (PTOL-85).

UNITED STATES PATENT AND TRADEMARK OFFICE

Commissioner for Patents
United States Patent and Trademark Office
P.O. Box 1450
Alexandria, VA 22313-1450
www.uspto.gov

WINSTON & STRAWN LLP
1700 K STREET, N.W.
WASHINGTON DC 20006

MAIL

SEP 22 2005

DIRECTOR OFFICE
TECHNOLOGY CENTER 2600

In re Application of :
Michael D. Ellis, et al. :
Application No. 10/645,928 : DECISION ON PETITION
Filed: August 20, 2003 : TO MAKE SPECIAL
For: ENHANCED RADIO SYSTEMS AND METHODS :

This is a decision on the petition filed August 27, 2004 under Manual of Patent Examination Procedure §708.02,VIII requesting accelerated examination.

The petition under Manual of Patent Examination Procedure §708.02, VIII, must:
(1) be filed prior to receiving any examination by the examiner,
(2) be accompanied by the required fee- $130,
(3) the claims should be directed to a single invention (if it is determined that the claims pertain to more than one invention, then applicant will have to make an election without traverse or forfeit accelerated examination status),
(4) state that a pre-examination search was made, and fully discuss the search method employed, such as classes and subclasses searched, publications, Chemical abstracts, patents, etc. A search made by a foreign patent office satisfies this requirement,
(5) be accompanied by a copy of each of the references most closely related to the subject matter encompassed by the claims if said references are not already of record,
(6) fully discuss the references, pointing out with the particularity required by 37 C.F.R. §1.111 (b) and (c), how the claimed subject matter is patentable over the references.

The petitioner meets all the above-listed requirements. Accordingly, the petition is **GRANTED**.

The application will retain its special status throughout its entire prosecution, including any appeal to the Board of Patent Appeals and Interferences, subject only to diligent prosecution by the applicant. The application file is being forwarded to the examiner for appropriate action in due course.

Kristi Zele
Special Program Examiner
Technology Center 2600
Communications

2644

The opinion in support of the decision being entered today was not written for publication and is not binding precedent of the Board.

Paper No. 16

UNITED STATES PATENT AND TRADEMARK OFFICE

BEFORE THE BOARD OF PATENT APPEALS AND INTERFERENCES

MAILED
JUN 30 2005
U.S. PATENT AND TRADEMARK OFFICE
BOARD OF PATENT APPEALS
AND INTERFERENCES

Ex parte JIM RASMUSSON

Appeal No. 2005-1176
Application No. 09/320,659

ON BRIEF

Before HAIRSTON, BARRETT, and RUGGIERO, Administrative Patent Judges.
HAIRSTON, Administrative Patent Judge.

DECISION ON APPEAL

This is an appeal from the final rejection of claims 1 through 28.

The disclosed invention relates to an adaptation enhancement processor that outputs a training signal for an adaptive filter portion of a signal processing device.

Claim 1 is illustrative of the claimed invention, and it reads as follows:

1. A signal processing device, comprising:

an adaptive filter configured to filter an input signal and to thereby provide a filtered output signal, wherein a filtering characteristic of said adaptive filter is dynamically adjusted based upon the filtered output signal and upon a training signal; and

an adaptation enhancement processor combining an adaptation-enhancing signal with a reference signal to provide the training signal to said adaptive filter, the adaptation-enhancing signal being dynamically adjusted based upon the reference signal.

The references relied on by the examiner are:

Guidoux	4,621,173	Nov. 4, 1986
Kawahara et al. (Kawahara)	5,859,907	Jan. 12, 1999

Claims 1 through 8, 10 through 16, 18 through 25, 27 and 28 stand rejected under 35 U.S.C. § 103(a) as being unpatentable over the admitted prior art in view of Kawahara.

Claims 9, 17 and 26 stand rejected under 35 U.S.C. § 103(a) as being unpatentable over the admitted prior art in view of Kawahara and Guidoux.

Reference is made to the briefs (paper numbers 11 and 13) and the answer (paper number 12) for the respective positions of the appellant and the examiner.

OPINION

We have carefully considered the entire record before us, and we will reverse the obviousness rejections of claims 1 through 28.

The examiner states (answer, page 4) that the acknowledged prior art (specification, page 2) "meets all elements of Claim 1 with the exception of an adaptation enhancement processor combining an adaptation enhancing signal with a reference signal to provide the training signal to said adaptive filter, the adaptive enhancing signal being dynamically adjusted based upon the reference signal." According to the examiner (answer, pages 4 and 5):

> Kawahara discloses a level/frequency characteristic measuring unit (Fig. 4, reference 12; column 7, lines 18-22) that corresponds to the adaptation enhancement processor claimed and combines a filtered pseudonoise signal that corresponds to the adaptation enhancing signal claimed from a pseudo noise generator (Fig. 4, reference 11, 13; column 7, lines 15-18) with a far end talker's voice (column 7, lines 61-64) that corresponds to the reference signal claimed to produce a far-end voice output signal (Fig. 4; reference Rout) that corresponds to the training signal claimed.

Based upon the teachings of Kawahara, the examiner concludes (answer, page 5) that "[i]t would have been obvious to one skilled in the art at the time of the invention to apply adaptation enhancement as taught by Kawahara to the prior art device disclosed by applicant for the purpose of estimating an echo path without depending on the far-end talker's voice."

Appellant argues inter alia (brief, page 10) that "the far-end talker's voice referred to in Kawahara cannot correspond to the claimed reference signal."

We agree with the appellant's argument. As indicated supra, claim 1 requires that the training signal that will be provided to the adaptive filter be produced by "combining an adaptation-enhancing signal with a reference signal." Although the far-end voice output Rout from adder 14 is influenced by the outputs from both the pseudo noise generator 11 and the variable filter 13, the far-end voice output Rout is only used by the echo replica generator 16 to derive an echo replica. The adder 17 combines the echo replica with the near-end voice input Sin to create a near-end voice output Sout. Thus, the near-end voice output Sout, as opposed to the far-end voice output Rout, serves as a training signal. In summary, the obviousness rejection of claim 1, and the claims that depend therefrom (i.e.,

claims 2 through 8, 10 and 11), is reversed because the far-end voice output signal Rout is used to form a echo replica signal, and not a training signal.

Turning to claims 12 and 20, we agree with the appellant's arguments (brief, pages 10 through 12) that the applied prior art neither teaches nor would have suggested to one of ordinary skill in the art that the adaptation-enhancing signal is influenced by a "frequency mask of the far-end audio signal" (claim 12) or that the adaptation-enhancing signal is computed based on a "frequency mask of the reference signal" (claim 20). Consequently, the obviousness rejection of claims 12 and 20, and the claims that depend therefrom (i.e., claims 13 through 16, 18, 19, 21 through 25, 27 and 28), is reversed.

The obviousness rejection of claims 9, 17 and 26 is reversed because the teachings of Guidoux do not cure the noted shortcomings in the teachings of the admitted prior art and Kawahara.

DECISION

The decision of the examiner rejecting claims 1 through 28 under 35 U.S.C. § 103(a) is reversed.

REVERSED

KENNETH W. HAIRSTON)
Administrative Patent Judge)
)
)
)
LEE E. BARRETT) BOARD OF PATENT
Administrative Patent Judge) APPEALS
) AND
) INTERFERENCES
)
)
JOSEPH F. RUGGIERO)
Administrative Patent Judge)

KWH/lp

BURNS DOANE SWECKER & MATHIS LLP
POST OFFICE BOX 1404
ALEXANDRIA, VA 22313-1404

UNITED STATES PATENT AND TRADEMARK OFFICE

COMMISSIONER FOR PATENT
UNITED STATES PATENT AND TRADEMARK OFFIC
P.O. BOX 1450
ALEXANDRIA, VA 22313-1450
www.uspto.go

June 18, 2004

Eric K. Satermo
Registered Patent Agent
P.O. Box 19099
Irvine, CA 92623-9099

JUN 18 2004

In re Application of:	:	
Paul I. Kahn	:	
Application No. 10/645,929	:	DECISION ON PETITION
Filed: August 20, 2003	:	TO MAKE SPECIAL
For: EASILY-ACCESSIBLE MULTI-SIGNAL LIGHT FOR A CHAIR POSITIONED AT A GAMING TABLE IN A CASINO	:	

This is a decision on the petition under 37 C.F.R. § 1.102, filed August 20, 2003, to make the above-identified application special.

Petitioner requests that the above-identified application be made special under the accelerated examination procedure set forth in the Manual of Patent Examining Procedure (M.P.E.P.) § 708.02, Section IV: Applicant's Age.

A grantable petition to make special under 37 C.F.R. § 1.102 and in accordance with M.P.E.P. § 708.02, Section IV, must include evidence showing that the applicant is sixty-five (65) years of age or more. No fee is required for this petition.

The petition includes Mr. Kahn's official U.S. Passport, as a showing that applicant is sixty-five (65) years of age or more.

Accordingly, the petition is granted.

The application is being forwarded to the examiner for expedited prosecution.

If the examiner can make this application special without prejudice to any possible interfering applications, and s/he should make a rigid search for such, s/he is authorized to do so for the next action. Should the application be rejected, the application will not be considered special for the subsequent action unless the applicant promptly makes a bona fide effort to place the application in condition for allowance, even if it is necessary to have an interview with the examiner to accomplish this purpose.

If the examiner finds any interfering application for the same subject matter, s/he should consider such application simultaneously with this application and should state in the official letter of such application that s/he is taking it out of its turn because of possible interference.

Should an appeal be taken in this application or should this application become involved in an interference, consideration of the appeal and the interference will be expedited by all Patent and Trademark Office officials concerned, contingent likewise upon diligent prosecution by the applicant.

After allowance, this application will be given priority for printing. See M.P.E.P. § 1309.

The petition is granted to the extent indicated.

Inquires regarding this decision should be directed to Lissi Mojica Marquis at (571) 272-1596.

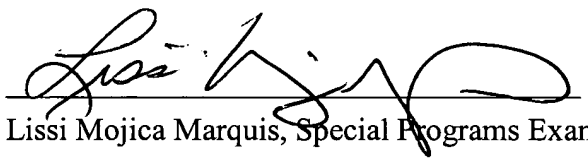

Lissi Mojica Marquis, Special Programs Examiner
Technology Center 2800
Semiconductors, Electrical and Optical
Systems and Components

UNITED STATES PATENT AND TRADEMARK OFFICE

COMMISSIONER FOR PATENTS
UNITED STATES PATENT AND TRADEMARK OFFICE
P.O. BOX 1450
ALEXANDRIA, VA 22313-1450
www.uspto.gov

JACK PAAVILA
BOX 1151
ALEXANDRIA KOC IA0 CA CANADA

COPY MAILED

AUG 16 2006

OFFICE OF PETITIONS

In re Application of
Rejean Roy
Application No. 10/645,931
Filed: August 22, 2003
Attorney Docket No. 247-1US

ON PETITION

This is a decision on the petition under 37 CFR 1.137(b) to revive the above-identified application, filed March 27, 2006.

The petition is GRANTED.

The application became abandoned for failure to pay the issue/publication fee on or before March 16, 2006. This decision precedes the mailing of a Notice of Abandonment.

Receipt is acknowledged of the issue fee on March 27, 2006. If petitioner desires to have the information normally found on the PTOL-85b printed on the patent, then the enclosed form should be completed and returned to Publishing Division within ONE MONTH from the mail date of this decision.

The application is being forwarded to Publishing Division.

Telephone inquires related to this decision should be directed to the undersigned at (571) 272-3204. Telephone inquiries related to processing at Publishing Division should be directed to (571) 272-4200.

Sherry D. Brinkley
Petitions Examiner
Office of Petitions

Enclosure - Part B – Fee(s) Transmittal

Privacy Act Statement

The **Privacy Act of 1974 (P.L. 93-579)** requires that you be given certain information in connection with your submission of the attached form related to a patent application or patent. Accordingly, pursuant to the requirements of the Act, please be advised that: (1) the general authority for the collection of this information is 35 U.S.C. 2(b)(2); (2) furnishing of the information solicited is voluntary; and (3) the principal purpose for which the information is used by the U.S. Patent and Trademark Office is to process and/or examine your submission related to a patent application or patent. If you do not furnish the requested information, the U.S. Patent and Trademark Office may not be able to process and/or examine your submission, which may result in termination of proceedings or abandonment of the application or expiration of the patent.

The information provided by you in this form will be subject to the following routine uses:

1. The information on this form will be treated confidentially to the extent allowed under the Freedom of Information Act (5 U.S.C. 552) and the Privacy Act (5 U.S.C 552a). Records from this system of records may be disclosed to the Department of Justice to determine whether disclosure of these records is required by the Freedom of Information Act.
2. A record from this system of records may be disclosed, as a routine use, in the course of presenting evidence to a court, magistrate, or administrative tribunal, including disclosures to opposing counsel in the course of settlement negotiations.
3. A record in this system of records may be disclosed, as a routine use, to a Member of Congress submitting a request involving an individual, to whom the record pertains, when the individual has requested assistance from the Member with respect to the subject matter of the record.
4. A record in this system of records may be disclosed, as a routine use, to a contractor of the Agency having need for the information in order to perform a contract. Recipients of information shall be required to comply with the requirements of the Privacy Act of 1974, as amended, pursuant to 5 U.S.C. 552a(m).
5. A record related to an International Application filed under the Patent Cooperation Treaty in this system of records may be disclosed, as a routine use, to the International Bureau of the World Intellectual Property Organization, pursuant to the Patent Cooperation Treaty.
6. A record in this system of records may be disclosed, as a routine use, to another federal agency for purposes of National Security review (35 U.S.C. 181) and for review pursuant to the Atomic Energy Act (42 U.S.C. 218(c)).
7. A record from this system of records may be disclosed, as a routine use, to the Administrator, General Services, or his/her designee, during an inspection of records conducted by GSA as part of that agency's responsibility to recommend improvements in records management practices and programs, under authority of 44 U.S.C. 2904 and 2906. Such disclosure shall be made in accordance with the GSA regulations governing inspection of records for this purpose, and any other relevant (*i.e.*, GSA or Commerce) directive. Such disclosure shall not be used to make determinations about individuals.
8. A record from this system of records may be disclosed, as a routine use, to the public after either publication of the application pursuant to 35 U.S.C. 122(b) or issuance of a patent pursuant to 35 U.S.C. 151. Further, a record may be disclosed, subject to the limitations of 37 CFR 1.14, as a routine use, to the public if the record was filed in an application which became abandoned or in which the proceedings were terminated and which application is referenced by either a published application, an application open to public inspection or an issued patent.
9. A record from this system of records may be disclosed, as a routine use, to a Federal, State, or local law enforcement agency, if the USPTO becomes aware of a violation or potential violation of law or regulation.

PART B - FEE(S) TRANSMITTAL

Complete and send this form, together with applicable fee(s), to: Mail **Mail Stop ISSUE FEE**
Commissioner for Patents
P.O. Box 1450
Alexandria, Virginia 22313-1450
or Fax (571)-273-2885

INSTRUCTIONS: This form should be used for transmitting the ISSUE FEE and PUBLICATION FEE (if required). Blocks 1 through 5 should be completed where appropriate. All further correspondence including the Patent, advance orders and notification of maintenance fees will be mailed to the current correspondence address as indicated unless corrected below or directed otherwise in Block 1, by (a) specifying a new correspondence address; and/or (b) indicating a separate "FEE ADDRESS" for maintenance fee notifications.

CURRENT CORRESPONDENCE ADDRESS (Note: Use Block 1 for any change of address)

Note: A certificate of mailing can only be used for domestic mailings of the Fee(s) Transmittal. This certificate cannot be used for any other accompanying papers. Each additional paper, such as an assignment or formal drawing, must have its own certificate of mailing or transmission.

Certificate of Mailing or Transmission

I hereby certify that this Fee(s) Transmittal is being deposited with the United States Postal Service with sufficient postage for first class mail in an envelope addressed to the Mail Stop ISSUE FEE address above, or being facsimile transmitted to the USPTO (571) 273-2885, on the date indicated below.

(Depositor's name)
(Signature)
(Date)

APPLICATION NO.	FILING DATE	FIRST NAMED INVENTOR	ATTORNEY DOCKET NO.	CONFIRMATION NO.

TITLE OF INVENTION:

APPLN. TYPE	SMALL ENTITY	ISSUE FEE DUE	PUBLICATION FEE DUE	PREV. PAID ISSUE FEE	TOTAL FEE(S) DUE	DATE DUE

EXAMINER	ART UNIT	CLASS-SUBCLASS

1. Change of correspondence address or indication of "Fee Address" (37 CFR 1.363).

☐ Change of correspondence address (or Change of Correspondence Address form PTO/SB/122) attached.

☐ "Fee Address" indication (or "Fee Address" Indication form PTO/SB/47; Rev 03-02 or more recent) attached. **Use of a Customer Number is required.**

2. For printing on the patent front page, list

(1) the names of up to 3 registered patent attorneys or agents OR, alternatively, 1_____

(2) the name of a single firm (having as a member a registered attorney or agent) and the names of up to 2 registered patent attorneys or agents. If no name is listed, no name will be printed. 2_____ 3_____

3. ASSIGNEE NAME AND RESIDENCE DATA TO BE PRINTED ON THE PATENT (print or type)

PLEASE NOTE: Unless an assignee is identified below, no assignee data will appear on the patent. If an assignee is identified below, the document has been filed for recordation as set forth in 37 CFR 3.11. Completion of this form is NOT a substitute for filing an assignment.

(A) NAME OF ASSIGNEE (B) RESIDENCE: (CITY and STATE OR COUNTRY)

Please check the appropriate assignee category or categories (will not be printed on the patent) : ☐ Individual ☐ Corporation or other private group entity ☐ Government

4a. The following fee(s) are submitted:

☐ Issue Fee

☐ Publication Fee (No small entity discount permitted)

☐ Advance Order - # of Copies _____

4b. Payment of Fee(s): **(Please first reapply any previously paid issue fee shown above)**

☐ A check is enclosed.

☐ Payment by credit card. Form PTO-2038 is attached.

☐ The Director is hereby authorized to charge the required fee(s), any deficiency, or credit any overpayment, to Deposit Account Number _____ (enclose an extra copy of this form).

5. **Change in Entity Status** (from status indicated above)

☐ a. Applicant claims SMALL ENTITY status. See 37 CFR 1.27. ☐ b. Applicant is no longer claiming SMALL ENTITY status. See 37 CFR 1.27(g)(2).

NOTE: The Issue Fee and Publication Fee (if required) will not be accepted from anyone other than the applicant; a registered attorney or agent; or the assignee or other party in interest as shown by the records of the United States Patent and Trademark Office.

Authorized Signature _____ Date _____

Typed or printed name _____ Registration No. _____

This collection of information is required by 37 CFR 1.311. The information is required to obtain or retain a benefit by the public which is to file (and by the USPTO to process) an application. Confidentiality is governed by 35 U.S.C. 122 and 37 CFR 1.14. This collection is estimated to take 12 minutes to complete, including gathering, preparing, and submitting the completed application form to the USPTO. Time will vary depending upon the individual case. Any comments on the amount of time you require to complete this form and/or suggestions for reducing this burden, should be sent to the Chief Information Officer, U.S. Patent and Trademark Office, U.S. Department of Commerce, P.O. Box 1450, Alexandria, Virginia 22313-1450. DO NOT SEND FEES OR COMPLETED FORMS TO THIS ADDRESS. SEND TO: Commissioner for Patents, P.O. Box 1450, Alexandria, Virginia 22313-1450.

Under the Paperwork Reduction Act of 1995, no persons are required to respond to a collection of information unless it displays a valid OMB control number.

UNITED STATES PATENT AND TRADEMARK OFFICE

UNITED STATES DEPARTMENT OF COMMERCE
United States Patent and Trademark Office
Address: COMMISSIONER FOR PATENTS
P.O. Box 1450
Alexandria, Virginia 22313-1450
www.uspto.gov

PVF -- ORACLE INTERNATIONAL CORPORATION
c/o PARK, VAUGHAN & FLEMING LLP
2820 FIFTH STREET
DAVIS, CA 95618-7759

Mail Date: 04/21/2010

Applicant	: Vipin Samar	: DECISION ON REQUEST FOR
Patent Number	: 7606788	: RECALCULATION of PATENT
Issue Date	: 10/20/2009	: TERM ADJUSTMENT IN VIEW
Appliction No	: 10/645,953	: OF WYETH AND NOTICE OF INTENT TO
Filed	: 08/22/2003	: ISSUE CERTIFICATE OF CORRECTION
		:

The Request for Recalculation is **GRANTED** to the extent indicated.

The patent term adjustment has been determined to be **631** days. The USPTO will *sua sponte* issue a certificate of correction reflecting the amount of PTA days determined by the recalculation.

Prior to the issuance of the certificate of correction, the USPTO will afford patentee an opportunity to be heard and request reconsideration. Accordingly, patentee has **one month or thirty (30) days**, whichever is longer, to file a request for reconsideration of this patent term adjustment calculation. See 35 U.S.C. 154(b)(3)(B)(ii) and 37 CFR 1.322(a)(4). No extensions of time will be granted under 37 CFR 1.136.

Patentee should use document code PET.OP if electronically filing a request for reconsideration of this patent term adjustment calculation. The patentee must also include the information required by 37 CFR 1.705(b)(2) and the fee required by 37 CFR 1.18(e). If patentee does not file a timely request for reconsideration of this patent term adjustment calculation including the information required by 37 CFR 1.705(b)(2) and the fee required by 37 CFR 1.18(e), the USPTO will issue a certificate of correction reflecting the PTA determination noted above.

Patentee should be aware that in order to preserve the right to review in the United States District Court for the District of Columbia of the USPTO patent term adjustment determination, patentee must ensure that he or she also take the steps required under 35 U.S.C. 154(b)(4)(A) in a timely manner. Nothing in the request for recalculation should be construed as providing an alternative time frame for commencing a civil action under 35 U.S.C. 154(b)(4)(A).

Any questions concerning this decision should be directed to the Office of Patent Legal Administration at 571-272-7702.

UNITED STATES PATENT AND TRADEMARK OFFICE

Commissioner for Patents
United States Patent and Trademark Office
P.O. Box 1450
Alexandria, VA 22313-1450
www.uspto.gov

ROBERT W STROZIER, P.L.L.C.
PO BOX 429
BELLAIRE TX 77402-0429

MAILED

JUN 03 2010

OFFICE OF PETITIONS

In re Application of
Naghavi, et al.
Application No. 10/645,970
Filed: August 22, 2003
Attorney Docket No. D8562-16
For: NOVEL RISK ASSESSMENT METHOD BASED UPON CORONARY CALCIFICATION DISTRIBUTION PATTERN IMAGED BY COMPUTED TOMOGRAPHY

ON PETITION

This is a decision on the petition, filed April 7, 2010, under 37 CFR 1.137(b) to revive the above-identified application.

The above-identified application became abandoned for failure to timely submit a reply within one month of the mailing of the March 6, 2009 Notice of Non-Compliant Amendment (Notice). No extensions of time under 37 CFR 1.136(a) or response being received, this application became abandoned on April 7, 2009. A Notice of Abandonment was mailed on September 15, 2009.

Applicants have submitted an amendment in reply to the March 6, 2009 Notice, an acceptable statement of the unintentional nature of the delay in responding to the March 6, 2009 Notice, and the petition fee.

The statement of unintentional delay was not signed by a person who would have been in a position of knowing that the delay in filing a timely response was unintentional. In the event that practitioner has no knowledge that the delay was in fact unintentional, practitioner should make a reasonable inquiry to ascertain that, in fact, the delay was unintentional. If practitioner discovers that the delay was intentional, practitioner must so notify the Office.

The petition is **GRANTED**.

The revocation/power of attorney/change of correspondence address, filed on April 7, 2010, has been accepted and made of record. Please find enclosed a Notice of Acceptance or Power of Attorney. Appropriate notification will be mailed to the prior attorneys of record.

After the mailing of this decision the application will be forwarded to Technology Center AU 3737 for further processing of the RCE filed on December 10, 2008 and consideration of the amendment filed on April 7, 2010.

Telephone inquiries should be directed to the undersigned at (571) 272-3230.

Shirene Willis Brantley
Senior Petitions Attorney
Office of Petitions

Enclosure: Notice of Acceptance of Power of Attorney

UNITED STATES PATENT AND TRADEMARK OFFICE

UNITED STATES DEPARTMENT OF COMMERCE
United States Patent and Trademark Office
Address: COMMISSIONER FOR PATENTS
P.O. Box 1450
Alexandria, Virginia 22313-1450
www.uspto.gov

APPLICATION NUMBER	FILING OR 371(C) DATE	FIRST NAMED APPLICANT	ATTY. DOCKET NO./TITLE
10/645,970	08/22/2003	Morteza Naghavi	D8562-16

CONFIRMATION NO. 8386

POA ACCEPTANCE LETTER

23873
ROBERT W STROZIER, P.L.L.C
PO BOX 429
BELLAIRE, TX 77402-0429

OC000000041900887

Date Mailed: 06/02/2010

NOTICE OF ACCEPTANCE OF POWER OF ATTORNEY

This is in response to the Power of Attorney filed 04/07/2010.

The Power of Attorney in this application is accepted. Correspondence in this application will be mailed to the above address as provided by 37 CFR 1.33.

/swbrantley/

Office of Data Management, Application Assistance Unit (571) 272-4000, or (571) 272-4200, or 1-888-786-0101

UNITED STATES PATENT AND TRADEMARK OFFICE

UNITED STATES DEPARTMENT OF COMMERCE
United States Patent and Trademark Office
Address: COMMISSIONER FOR PATENTS
P.O. Box 1450
Alexandria, Virginia 22313-1450
www.uspto.gov

APPLICATION NUMBER	FILING OR 371(C) DATE	FIRST NAMED APPLICANT	ATTY. DOCKET NO./TITLE
10/645,970	08/22/2003	Morteza Naghavi	D8562-16

CONFIRMATION NO. 8386

POWER OF ATTORNEY NOTICE

25397
DUANE MORRIS LLP - Houston
1330 POST OAK BLVD.
SUITE 800
HOUSTON, TX 77056

OC000000041900863

Date Mailed: 06/02/2010

NOTICE REGARDING CHANGE OF POWER OF ATTORNEY

This is in response to the Power of Attorney filed 04/07/2010.

- The Power of Attorney to you in this application has been revoked by the assignee who has intervened as provided by 37 CFR 3.71. Future correspondence will be mailed to the new address of record(37 CFR 1.33).

/swbrantley/

Office of Data Management, Application Assistance Unit (571) 272-4000, or (571) 272-4200, or 1-888-786-0101

UNITED STATES PATENT AND TRADEMARK OFFICE

Commissioner for Patents
United States Patent and Trademark Office
P.O. Box 1450
Alexandria, VA 22313-1450
www.uspto.gov

IP Department
Schnader Harrison Segal & Lewis
36th Floor
1600 Market Street
Philadelphia, PA 19103

COPY MAILED

JUL 17 2007

OFFICE OF PETITIONS

In re Application of :
Dean S. Thompson :
Application No. 10/645,982 : DECISION ON PETITION
Filed: August 22, 2003 : TO WITHDRAW
Attorney Docket No. 3005669-0003 : FROM RECORD
:

This is a decision on the Request to Withdraw as attorney or agent of record under 37 C.F.R. § 1.36(b), filed January 4, 2007.

The request is **NOT APPROVED** as moot.

A review of the file record indicates that the power of attorney to Schnader Harrison Segal & Lewis has been revoked by the applicant of the patent application on December 27, 2006. Accordingly, the request to withdraw under 37 C.F.R. § 1.36(b) is moot.

All future communications from the Office will continue to be directed to the below-listed address until otherwise notified by applicant.

Telephone inquires concerning this decision should be directed to Terri Williams at 571-272-2991.

Terri Williams
Petitions Examiner
Office of Petitions

cc: **rudoler & derosa llc**
Attn : Docket Clerk
2 Bala Plaza
Suite 300
Bala Cynwyd, PA 19004

UNITED STATES PATENT AND TRADEMARK OFFICE

Commissioner for Patents
United States Patent and Trademark Office
P.O. Box 1450
Alexandria, VA 22313-1450
www.uspto.gov

FENWICK & WEST LLP
Silicon Valley Center
801 California Street
Mountain View, CA 94041

MAILED

MAR 2 2 2005

Technology Center 2100

In re Application of:
William E. SOBEL, et al.
Application No. 10/645,989
Filed: August 22, 2003
For: SOURCE INDEPENDENT FILE ATTRIBUTE TRACKING

DECISION ON REQUEST TO WITHDRAW AS ATTORNEY OR AGENT

This is a decision on the Request For Withdrawal As Attorney Under 37 CFR § 1.36 and 0.40(c) filed September 28, 2004.

A Revocation And Substitution Of Power Of Attorney Under 37 CFR § 1.36 was filed on December 20, 2004. The Power Of Attorney revoked all prior Powers Of Attorney and appointed Sonnenschein, Nath & Rosenthal LLP as the attorney(s) of record of the instant application. The Power of Attorney of December 20, 2004 was accepted. Accordingly, all communications from the U.S. Patent and Trademark Office to applicant are to be conducted by Sonnenschein, Nath & Rosenthal LLP.

For the above stated reasons, the request is **DISMISSED AS MOOT**.

No further communication to you regarding this application will be made.

For Vincent N. Trans
Special Program Examiner
Technology Center 2100
Computer Architecture, Software, and
Information Security
571-272-3613

cc: Sonnenschein Nath & Rosenthal LLP
685 Market Street, 6th Floor
San Francisco, CA 94105

UNITED STATES PATENT AND TRADEMARK OFFICE

UNITED STATES DEPARTMENT OF COMMERCE
United States Patent and Trademark Office
Address: COMMISSIONER FOR PATENTS
P.O. Box 1450
Alexandria, Virginia 22313-1450
www.uspto.gov

APPL NO.	FILING OR 371 (c) DATE	ART UNIT	FIL FEE REC'D	ATTY.DOCKET NO	DRAWINGS	TOT CLMS	IND CLMS
10/645,991	08/21/2003	2125	10032	M-15109-3C US	15	97	97

CONFIRMATION NO. 9038

MacPherson Kwok Chen & Held LLP
Suite 226
1762 Technology Drive
San Jose, CA 95110

CORRECTED FILING RECEIPT

OC000000012964889

Date Mailed: 06/16/2004

Receipt is acknowledged of this regular Patent Application. It will be considered in its order and you will be notified as to the results of the examination. Be sure to provide the U.S. APPLICATION NUMBER, FILING DATE, NAME OF APPLICANT, and TITLE OF INVENTION when inquiring about this application. Fees transmitted by check or draft are subject to collection. Please verify the accuracy of the data presented on this receipt. **If an error is noted on this Filing Receipt, please write to the Office of Initial Patent Examination's Filing Receipt Corrections, facsimile number 703-746-9195. Please provide a copy of this Filing Receipt with the changes noted thereon. If you received a "Notice to File Missing Parts" for this application, please submit any corrections to this Filing Receipt with your reply to the Notice. When the USPTO processes the reply to the Notice, the USPTO will generate another Filing Receipt incorporating the requested corrections (if appropriate).**

Applicant(s)

Greg Benson, San Diego, CA;
Gregory H. Urich, Lund, SWEDEN;
Christopher L. Knauft, San Diego, CA;

Domestic Priority data as claimed by applicant

This application is a CON of 09/321,386 05/27/1999

Foreign Applications

SWEDEN 950036-4 02/01/1995

If Required, Foreign Filing License Granted: 11/20/2003

Projected Publication Date: Not Applicable

Non-Publication Request: No

Early Publication Request: No

Title

Method and system for managing a data object so as to comply with predetermined conditions for usage

Preliminary Class

707

LICENSE FOR FOREIGN FILING UNDER
Title 35, United States Code, Section 184
Title 37, Code of Federal Regulations, 5.11 & 5.15

GRANTED

The applicant has been granted a license under 35 U.S.C. 184, if the phrase "IF REQUIRED, FOREIGN FILING LICENSE GRANTED" followed by a date appears on this form. Such licenses are issued in all applications where the conditions for issuance of a license have been met, regardless of whether or not a license may be required as set forth in 37 CFR 5.15. The scope and limitations of this license are set forth in 37 CFR 5.15(a) unless an earlier license has been issued under 37 CFR 5.15(b). The license is subject to revocation upon written notification. The date indicated is the effective date of the license, unless an earlier license of similar scope has been granted under 37 CFR 5.13 or 5.14.

This license is to be retained by the licensee and may be used at any time on or after the effective date thereof unless it is revoked. This license is automatically transferred to any related applications(s) filed under 37 CFR 1.53(d). This license is not retroactive.

The grant of a license does not in any way lessen the responsibility of a licensee for the security of the subject matter as imposed by any Government contract or the provisions of existing laws relating to espionage and the national security or the export of technical data. Licensees should apprise themselves of current regulations especially with respect to certain countries, of other agencies, particularly the Office of Defense Trade Controls, Department of State (with respect to Arms, Munitions and Implements of War (22 CFR 121-128)); the Office of Export Administration, Department of Commerce (15 CFR 370.10 (j)); the Office of Foreign Assets Control, Department of Treasury (31 CFR Parts 500+) and the Department of Energy.

NOT GRANTED

No license under 35 U.S.C. 184 has been granted at this time, if the phrase "IF REQUIRED, FOREIGN FILING LICENSE GRANTED" DOES NOT appear on this form. Applicant may still petition for a license under 37 CFR 5.12, if a license is desired before the expiration of 6 months from the filing date of the application. If 6 months has lapsed from the filing date of this application and the licensee has not received any indication of a secrecy order under 35 U.S.C. 181, the licensee may foreign file the application pursuant to 37 CFR 5.15(b).

UNITED STATES PATENT AND TRADEMARK OFFICE

Commissioner for Patents
United States Patent and Trademark Office
P.O. Box 1450
Alexandria, VA 22313-1450
www.uspto.gov

KOKKA & BACKUS, PC
200 PAGE MILL ROAD
SUITE 103
PALO ALTO CA 94306

COPY MAILED

OCT 0 1 2008

OFFICE OF PETITIONS

In re Application of :
SOARES, Thomas et al. :
Application No. 10/646,019 : DECISION ON PETITION
Filed: August 22, 2003 : TO WITHDRAW
Attorney Docket No. **LON-001** : FROM RECORD
:

This is a decision on the Request to Withdraw as attorney or agent of record under 37 C.F.R. § 1.36(b), filed July 28, 2008.

The request is **NOT APPROVED**.

A grantable request to withdraw as attorney/agent of record must be signed by every attorney/agent seeking to withdraw or contain a clear indication that one attorney is signing on behalf of another/others. The Office requires the practitioner(s) requesting withdrawal to certify that he, she, or they have: (1) given reasonable notice to the client, prior to the expiration of the response period, that the practitioner(s) intends to withdraw from employment; (2) delivered to the client or a duly authorized representative of the client all papers and property (including funds) to which the client is entitled; and (3) notified the client of any responses that may be due and the time frame within which the client must respond, pursuant 37 CFR 10.40(c).

The request cannot be approved because there is no indication that the acts noted in the above-identified certifications have been performed.

All future communications from the Office will continue to be directed to the above-listed address until otherwise notified by applicant.

Telephone inquiries concerning this decision should be directed to Michelle R. Eason at 571-272- 4231.

Michelle R. Eason
Paralegal Specialist
Office of Petitions

cc: **BORIS PEVZNER**
33-44 91ST STREET
APT. 4X
JACKSON HEIGHTS, NY 11372

UNITED STATES PATENT AND TRADEMARK OFFICE

Commissioner for Patents
United States Patent and Trademark Office
P.O. Box 1450
Alexandria, VA 22313-1450
www.uspto.gov

KOKKA & BACKUS, PC
200 PAGE MILL ROAD
SUITE 103
PALO ALTO CA 94306

COPY MAILED

SEP 15 2008

In re Application of :

SOARES, Thomas et al. :
Application No. 10/646,020 : DECISION ON PETITION
Filed: August 22, 2003 : TO WITHDRAW
Attorney Docket No. **LON-002** : FROM RECORD
:

This is a decision on the Request to Withdraw as attorney or agent of record under 37 C.F.R. § 1.36(b), filed July 28, 2008.

The request is **NOT APPROVED**.

A grantable request to withdraw as attorney/agent of record must be signed by every attorney/agent seeking to withdraw or contain a clear indication that one attorney is signing on behalf of another/others. The Office requires the practitioner(s) requesting withdrawal to certify that he, she, or they have: (1) given reasonable notice to the client, prior to the expiration of the response period, that the practitioner(s) intends to withdraw from employment; (2) delivered to the client or a duly authorized representative of the client all papers and property (including funds) to which the client is entitled; and (3) notified the client of any responses that may be due and the time frame within which the client must respond, pursuant 37 CFR 10.40(c).

The request cannot be approved because there is no indication that the acts noted in the above-identified certifications have been performed.

The request to change the correspondence address of record is not acceptable as the requested correspondence address is not that of: (1) the first named signing inventor; or (2) an intervening assignee of the entire interest under 37 C.F.R 3.71. All future communications from the Office will be directed to the first named signing inventor.

All future communications from the Office will continue to be directed to the above-listed address until otherwise notified by applicant.

Telephone inquiries concerning this decision should be directed to Michelle R. Eason at 571-272- 4231.

Michelle R. Eason
Paralegal Specialist
Office of Petitions

cc: **BORIS PEVZNER**
33-44 91ST STREET
APT. 4X
JACKSON HEIGHTS, NY 11372

UNITED STATES PATENT AND TRADEMARK OFFICE

Commissioner for Patents
United States Patent and Trademark Office
P.O. Box 1450
Alexandria, VA 22313-1450
www.uspto.gov

KOKKA & BACKUS, PC
200 PAGE MILL ROAD
SUITE 103
PALO ALTO CA 94306

RECEIVED

DEC 22 2008

OFFICE OF PETITIONS

In re Application of :

SOARES, Thomas et al. :
Application No. 10/646, 020 :
Filed: August 22, 2003 :
Attorney Docket No. **LON-002** :

DECISION ON PETITION
TO WITHDRAW
FROM RECORD

This is a decision on the Request to Withdraw as attorney or agent of record under 37 C.F.R. § 1.36(b), filed October 14, 2008.

The request is **APPROVED**.

A grantable request to withdraw as attorney/agent of record must be signed by every attorney/agent seeking to withdraw or contain a clear indication that one attorney is signing on behalf of another/others. The Office requires the practitioner(s) requesting withdrawal to certify that he, she, or they have: (1) given reasonable notice to the client, prior to the expiration of the response period, that the practitioner(s) intends to withdraw from employment; (2) delivered to the client or a duly authorized representative of the client all papers and property (including funds) to which the client is entitled; and (3) notified the client of any responses that may be due and the time frame within which the client must respond, pursuant 37 CFR 10.40(c).

The request was signed by Scott S. Kokka on behalf of all attorneys of record who are associated with customer No. 53830. All attorneys/agents associated have been withdrawn. Applicant is reminded that there is no attorney of record at this time.

The request to change the correspondence address of record is not acceptable as the requested correspondence address is not that of: (1) the first named signing inventor; or (2) an intervening assignee of the entire interest under 37 C.F.R 3.71. All future communications from the Office will be directed to the first named signing inventor.

Telephone inquiries concerning this decision should be directed to Michelle R. Eason at 571-272-4231.

Michelle R. Eason
Paralegal Specialist
Office of Petitions

cc: **THOMAS SOARES**
1400 BOWE AVE., #805
SANTA CLARA, CA 95051

cc: **BORIS PEVZNER**
33-44 91ST STREET
APT. 4X
JACKSON HEIGHTS, NY 11372

OIPE JC1/84
MAY 31 2005
PATENT & TRADEMARK OFFICE

7/12/05
APPROVED

IFW

Attorney Docket No.: RAY-001

IN THE UNITED STATES
PATENT AND TRADEMARK OFFICE

Serial No.: **10/646,021**)
Patent No.: **Not Applicable.**)
Filed: **8/22/2003**)
Invention: **Pole Anchor Footing System**)
1st Inventor: **Ray, Robert**)
Examiner: **Chapman, Jeanette E.**)
Group Art Unit: **3635**)

REQUEST FOR WITHDRAWAL AS ATTORNEY

To: **Commissioner for Patents**
P.O. Box 1450
Alexandria, VA 22313-1450

Dear Commissioner:

I, Michael S. Neustel, (41,221) hereby apply to withdraw as attorney for the above-identified patent application. This application for withdrawal will not prejudice the Applicant in this matter. Attorney has given due notice to the Applicant of his withdrawal and has delivered to the Applicant all papers/property in the Attorney's file concerning the prosecution of the application.

The reason(s) for this request are:

[ ] Practitioner has been discharged by client.

[ ] Client knowingly and freely assents to termination of the employment.

[ ] Client has failed to pay one or more bills rendered by the practitioner for an unreasonable period of time.

[X] Client has failed to pay a retainer in advance of the performance of legal services and/or payment of USPTO fees.

Please change the correspondence address and direct all future correspondence to:

Robert H. Ray
P.O. Box 155
Igo, CA 96047
Telephone: (530) 396-2327
Facsimile:

Respectfully submitted,

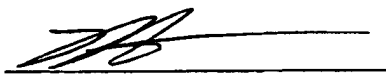

May 26, 2005
Date

Michael S. Neustel (Reg. No. 41,221)
NEUSTEL LAW OFFICES, LTD
2534 South University Drive, Suite No. 4
Fargo, North Dakota 58103
Telephone: (701) 281-8822
Facsimile: (701) 237-0544
e-mail: michael@neustel.com

Copy: Robert H. Ray

UNITED STATES PATENT AND TRADEMARK OFFICE

Commissioner for Patents
United States Patent and Trademark Office
P.O. Box 1450
Alexandria, VA 22313-1450
www.uspto.gov

KOKKA & BACKUS, PC
200 PAGE MILL ROAD, SUITE 103
PALO ALTO, CA 94306

COPY MAILED

SEP 19 2008

In re Application of	:	
SOARES, et al.	:	
Application No. 10/646,022	:	DECISION ON PETITION TO
Filed: August 22, 2003	:	WITHDRAW FROM RECORD
Attorney Docket No. LON-003	:	
	:	

This is a decision on the Request to Withdraw as attorney or agent of record under 37 C.F.R. § 1.36(b), filed July 28, 2008.

The request is APPROVED.

A grantable request to withdraw as attorney/agent of record must be signed by every attorney/agent seeking to withdraw or contain a clear indication that one attorney is signing on behalf of another/others. A request to withdraw will not be approved unless at least 30 (thirty) days would remain between the date of approval and the later of the expiration date of a time to file a response or the expiration date of the maximum time period which can be extended under 37 C.F.R. § 1.136(a).

The request was signed by Scott Kokka on behalf of all attorneys of record. All attorneys/agents associated have been withdrawn. Applicant is reminded that there is no attorney of record at this time.

The request to change the correspondence of record is not acceptable as the requested correspondence address as it is not that of: (1) the first named signing inventor; or (2) an intervening assignee of the entire interest under 37 C.F.R 3.71. All future communications from the Office will be directed to the first named signing inventor at the first copied address below until otherwise properly notified by the applicant.

Telephone inquiries concerning this decision should be directed to the undersigned at 571-272-7253.

Monica A. Graves
Petitions Examiner
Office of Petitions

cc: THOMAS SOARES
1400 BOWE AVENUE
SANTA CLARA, CA 95051

cc: BORIS PEVZNER
33-44 91ST STREET, APT 4X
JACKSON HEIGHTS, NY 11372

UNITED STATES PATENT AND TRADEMARK OFFICE

COMMISSIONER FOR PATENTS
UNITED STATES PATENT AND TRADEMARK OFFICE
P.O. BOX 1450
ALEXANDRIA, VA 22313-1450
www.uspto.gov

MCANDREWS HELD & MALLOY, LTD
500 WEST MADISON STREET
SUITE 3400
CHICAGO, IL 60661

COPY MAILED

JUL 22 2008

OFFICE OF PETITIONS

In re Application of :
Stephen Johnson :
Application No. 10/646,031 : DECISION ON PETITION
Filed: August 22, 2003 :
Attorney Docket No. 273402004800 :

This is a decision in response to the petition under the unintentional provisions of 37 CFR 1.137(b), filed February 26, 2008, to revive the above-identified application.

There is no indication that the petition is signed by a registered patent attorney or patent agent of record. However, in accordance with 37 CFR 1.34, the signature of Mr. Christopher N. George appearing on the correspondence shall constitute a representation to the United States Patent and Trademark Office that he is authorized to represent the particular party on whose behalf he acts.

The petition is **DISMISSED.**

Any request for reconsideration of this decision must be submitted within TWO (2) MONTHS from the mail date of this decision. Extensions of time under 37 CFR 1.136(a) are permitted. The reconsideration request should include a cover letter entitled "Renewed Petition under 37 CFR 1.137(b)." This is **not** a final agency action within the meaning of 5 U.S.C. § 704.

The application became abandoned for failure to reply in a timely manner to the non-final Office action mailed, August 12, 2004, which set a shortened statutory period for reply of three (3) months. No extension of time under the provisions of 37 CFR 1.136(a) was obtained. Accordingly, the application became abandoned on November 13, 2004. A Notice of Abandonment was mailed on February 22, 2005.

A grantable petition under 37 CFR 1.137(b) must be accompanied by: (1) the required reply, unless previously filed; (2) the

petition fee as set forth in 37 CFR 1.17(m); (3) a statement that the entire delay in filing the required reply from the due date for the reply until the filing of a grantable petition pursuant to 37 CFR 1.137(b) was unintentional; and (4) any terminal disclaimer (and fee as set forth in 37 CFR 1.20(d)) required by 37 CFR 1.137(d). Where there is a question as to whether either the abandonment or the delay in filing a petition under 37 CFR 1.137 was unintentional, the Director may require additional information. *See* MPEP 711.03(c)(II)(C) and (D). The instant petition lacks item (3).

Petitioner has supplied the reply in the form of an amendment and the petition fee of $1,540; however, the petition lacks an adequate statement of unintentional delay.

In this regard, the record indicates that petitioner was not responsible for prosecution of the application when the reply necessary to avoid abandonment was due. Further, there are three periods to be considered during the evaluation of a petition under 37 CFR 1.137(b):

> (1) the delay in reply that originally resulted in the abandonment;
>
> (2) the delay in filing an initial petition pursuant to 37 CFR 1.137(b) to revive the application; and
>
> (3) the delay in filing a grantable petition pursuant to 37 CFR 1.137(b) to revive the application.

Currently, the delay has not been shown to the satisfaction of the Director to be unintentional for periods (1) and (2).

As to Period (1):

The patent statute at 35 U.S.C. § 41(a)(7) authorizes the Director to revive an "unintentionally abandoned application." The legislative history of Public Law 97-247 reveals that the purpose of 35 U.S.C. § 41(a)(7) is to permit the Office to have more discretion than in 35 U.S.C. §§ 133 or 151 to revive abandoned applications in appropriate circumstances, but places a limit on this discretion, stating that "[u]nder this section a petition accompanied by either a fee of $500 or a fee of $50 **would not be granted where the abandonment** or the failure to pay the fee for issuing the patent **was intentional** as opposed to being unintentional or unavoidable." [emphasis added]. See H.R. Rep. No. 542, 97th Cong., 2d Sess. 6-7 (1982), *reprinted in* 1982

U.S.C.C.A.N. 770-71. The revival of an intentionally abandoned application is antithetical to the meaning and intent of the statute and regulation.

35 U.S.C. § 41(a)(7) authorizes the Director to accept a petition "for the revival of an unintentionally abandoned application for a patent." As amended December 1, 1997, 37 CFR 1.137(b)(3) provides that a petition under 37 CFR 1.137(b) must be accompanied by a statement that the delay was unintentional, but provides that "[t]he Commissioner may require additional information where there is a question whether the delay was unintentional." Where, as here, there is a question whether the initial delay was unintentional, the petitioner must meet the burden of establishing that the delay was unintentional within the meaning of 35 U.S.C. § 41(a)(7) and 37 CFR 1.137(b). *See* In re Application of G, 11 USPQ2d 1378, 1380 (Comm'r Pats. 1989); 37 CFR 1.137(b). Here, in view of the inordinate delay (over three (3) years) in resuming prosecution, there is a question whether the entire delay was unintentional. Petitioner should note that the issue is not whether some of the delay was unintentional by any party; rather, the issue is whether the entire delay has been shown to the satisfaction of the Director to be unintentional.

The question under 37 CFR 1.137(b) for period (1) is whether the delay on the part of the party having the right or authority to reply to avoid abandonment (or not reply) was unintentional. Accordingly, any renewed petition must clearly identify the party having the right to reply to avoid abandonment on November 13, 2004. That party, in turn must explain what effort(s) was made to further reply to the outstanding Office action and, further, why no reply was filed. If no effort was made to further reply, then that party must explain why the delay in this application does not result from a deliberate course of action (or inaction). Likewise, as Morrison & Foerster LLP were counsels of record at the time of abandonment, they should explain why this application became abandoned while it was under their control and what efforts the law office of Morrison & Foerster LLP made to further reply and with whom this matter was discussed outside of the law office of Morrison & Foerster LLP. Copies of any correspondence relating to the filing, or to not filing a further reply to the outstanding Office action are required from whoever else was involved with this application at the time of abandonment. Statements are required from any and all persons then at the law office of Morrison & Foerster LLP, and the responsible person(s) having firsthand knowledge of the circumstances surrounding the lack of a reply to the outstanding Office action. As the courts have made clear, it is pointless for the USPTO to revive a long abandoned application without an adequate showing that the delay did not result from a deliberate course of action. *See* Lawman

Armor v. Simon, 2005 U.S. Dist. LEXIS 10843, 74 USPQ2d 1633 (DC EMich 2005); Field Hybrids, LLC v. Toyota Motor Corp., 2005 U.S. Dist. LEXIS 1159 (D. Minn Jan. 27, 2005); Lumenyte Int'l Corp. v. Cable Lite Corp., Nos. 96-1011, 96-1077, 1996 U.S. App. LEXIS 16400, 1996 WL 383927 (Fed. Cir. July 9, 1996) (unpublished) (patents held unenforceable due to a finding of inequitable conduct in submitting an inappropriate statement that the abandonment was unintentional).

As to Period (2):

Likewise, where the applicant deliberately chooses not to seek or persist in seeking the revival of an abandoned application, or where the applicant deliberately chooses to delay seeking the revival of an abandoned application, the resulting delay in seeking revival of the abandoned application cannot be considered as "unintentional" within the meaning of 37 CFR 1.137(b). *See* MPEP 711.03(c).

The language of both 35 U.S.C. § 41(a)(7) and 37 CFR 1.137(b) are clear and unambiguous, and, furthermore, without qualification. That is, the delay in filing the reply during prosecution, as well as in filing the petition seeking revival, must have been, without qualification, "unintentional" for the reply to now be accepted on petition. The Office requires that the entire delay be at least unintentional as a prerequisite to revival of an abandoned application to prevent abuse and injury to the public. *See* H.R. Rep. No. 542, 97th Cong., 2d Sess. 7 (1982), reprinted in 1982 U.S.C.C.A.N. 771 ("[i]n order to prevent abuse and injury to the public the Commissioner . . . could require applicants to act promptly after becoming aware of the abandonment"). The December 1997 change to 37 CFR 1.137 did not create any new right to overcome an intentional delay in seeking revival, or in renewing an attempt at seeking revival, of an abandoned application. *See* Changes to Patent Practice and Procedure; Final Rule Notice, 62 Fed. Reg. 53131, 53160 (October 10, 1997), 1203 Off. Gaz. Pat. Office 63, 87 (October 21, 1997), which clearly stated that any protracted delay (here, over three years) could trigger, as here, a request for additional information. As the courts have since made clear, a protracted delay in seeking revival, as here, requires a petitioner's detailed explanation seeking to excuse the delay as opposed to USPTO acceptance of a general allegation of unintentional delay. *See* Lawman Armor v. Simon, 2005 U.S. Dist. LEXIS 10843, 74 USPQ2d 1633, at 1637-8 (DC EMich 2005); Field Hybrids, LLC v. Toyota Motor Corp., 2005 U.S. Dist. LEXIS 1159 (D. Minn Jan. 27, 2005) at *21-*23. Statements are required from any and all persons then at law office of Morrison & Foerster LLP and the responsible person(s) having firsthand knowledge of the circumstances surrounding the

protracted delay, after the abandonment date, in seeking revival.

As noted in MPEP 711.03(c)(II), subsection D, in instances in which such petition was not filed within 1 year of the date of abandonment of the application, applicants should include:

> (A) the date that the applicant first became aware of the abandonment of the application; and
> (B) a showing as to how the delay in discovering the abandoned status of the application occurred despite the exercise of due care or diligence on the part of the applicant.

In either instance, applicant's failure to carry the burden of proof to establish that the "entire" delay was "unavoidable" or "unintentional" may lead to the denial of a petition under 37 CFR 1.137(b), regardless of the circumstances that originally resulted in the abandonment of the application. *See also* New York University v. Autodesk, 2007 U.S. DIST LEXIS, U.S.District LEXIS 50832, *10 -*12 (S.D.N.Y. 2007)(protracted delay in seeking revival undercuts assertion of unintentional delay).

Any renewed petition may be addressed as follows:

By Mail: Mail Stop PETITION
Commissioner for Patents
P. O. Box 1450
Alexandria, VA 22313-1450

By hand: U. S. Patent and Trademark Office
Customer Service Window, Mail Stop Petitions
Randolph Building
401 Dulany Street
Alexandria, VA 22314

The centralized facsimile number is **(571) 273-8300.**

Correspondence regarding this decision may also be filed through the electronic filing system of the USPTO.

Telephone inquiries concerning this decision should be directed to the undersigned at (571) 272-3204.

Sherry D. Brinkley
Petitions Examiner
Office of Petitions

United States
Patent And
Trademark Office

P.O. Box 1450, Alexandria, Virginia 22313-1450 – www.uspto.gov

PETITION DECISION

04/02/04

Blakely, Sokoloff, Taylor & Zafman LLP
12400 Wilshire Blvd
Seventh Floor
Los Angeles, Ca 90025-1030

Dear Applicant:

The Box PG Pub replacement drawings for application number 10/646033 received on 03/05/04 by the U. S. Patent and Trademark Office will be included for patent publication.

Telephone inquiries should be directed to Kaletus King, Office of Pre-Grant Publication 703 605-4283.

Kaletus King

Signature of Reviewer, Office of Pre-Grant Publication

UNITED STATES PATENT AND TRADEMARK OFFICE

COMMISSIONER FOR PATENTS
UNITED STATES PATENT AND TRADEMARK OFFICE
P.O. BOX 1450
ALEXANDRIA, VA 22313-1450
www.uspto.gov

MAIL

NOV 01 2004

DIRECTOR OFFICE
TECHNOLOGY CENTER 2600

TOWNSEND AND TOWNSEND AND CREW, LLP
TWO EMBARCADERO CENTER
EIGHTH FLOOR
SAN FRANCISCO, CA 94111-3834

In re Application of
Norio Shimozono, et al.
Application No. 10/646,036
Filed: August 27, 2003
For: NETWORK SYSTEM AND ITS SWITCHES

DECISION ON PETITION TO MAKE SPECIAL

This is a decision on the petition filed September 3, 2004 pursuant to Manual of Patent Examination Procedure §708.02, section VIII, requesting accelerated.

The petition under Manual of Patent Examination Procedure §708.02, VIII, must:
(1) be filed prior to receiving any examination by the examiner,
(2) be accompanied by the required fee- $130,
(3) the claims should be directed to a single invention (if it is determined that the claims pertain to more than one invention, then applicant will have to make an election without traverse or forfeit accelerated examination status),
(4) state that a pre-examination search was made, and fully discuss the search method employed, such as classes and subclasses searched, publications, Chemical abstracts, patents, etc. A search made by a foreign patent office satisfies this requirement,
(5) be accompanied by a copy of each of the references most closely related to the subject matter encompassed by the claims if said references are not already of record,
(6) fully discuss the references, pointing out with the particularity required by 37 C.F.R. §1.111 (b) and (c), how the claimed subject matter is patentable over the references.

The petitioner meets all the above-listed requirements. Accordingly, the petition is **GRANTED**.

The application will retain its special status throughout its entire prosecution, including any appeal to the Board of Patent Appeals and Interferences, subject only to diligent prosecution by the applicant. The application file is being forwarded to the examiner for appropriate action in due course.

Kenneth A. Wieder
Special Program Examiner
Technology Center 2600
Communications
(571) 272-2986

SPE RESPONSE FOR CERTIFICATE OF CORRECTION

Paper No.: 3/20/2006

DATE : 03/20/2006

TO SPE OF : ART UNIT 3700 (3751)

SUBJECT : Request for Certificate of Correction on Patent No.: 6,859,954

A response is requested with respect to the accompanying request for a certificate of correction.

Please complete this form and return with file, within 7 days to:
Certificates of Correction Branch - PK 3-922
Palm location **7580** - Tel. No. 305-8309

With respect to the change(s) requested, correcting Office and/or Applicant's errors, should the patent read as shown in the certificate of correction? No new matter should be introduced, nor should the scope or meaning of the claims be changed.

Ok to enter changes as requested in COCIN? Particularly, the claims.

Ernest C. White, LIE305-8339
Certificates of Correction Branch

Thank You For Your Assistance

The request for issuing the above-identified correction(s) is hereby:
Note your decision on the appropriate box.

- ☒ **Approved** — All changes apply.
- ☐ **Approved in Part** — Specify below which changes **do not** apply.
- ☐ **Denied** — State the reasons for denial below.

Comments:

GREGORY HUSON
SUPERVISORY PATENT EXAMINER
TECHNOLOGY CENTER 3700

SPE

3751
Art Unit

UNITED STATES PATENT AND TRADEMARK OFFICE

COMMISSIONER FOR PATENTS
UNITED STATES PATENT AND TRADEMARK OFFICE
P.O. BOX 1450
ALEXANDRIA, VA 22313-1450
www.uspto.gov

Paper No.

Jonathan S. Miller
BLAKELY, SOKOLOFF, TAYLOR &
ZAFMAN LLP
12400 Wilshire Blvd.
Seventh Floor
Los Angeles, CA 90025

MAILED

JAN 18 2005

Technology Center 2100

In re Application of: Elliot A.Gottfurcht
Application No. 10/646,066
Filed: August 21, 2003
For: METHOD TO GENERATE ADVERTISING REVENUE BASED ON TIME AND LOCATION

DECISION ON PETITION TO MAKE SPECIAL

This is a decision on the petition under 37 C.F.R. § 1.102(c) and M.P.E.P. § 708.02, Section IV: Applicant's Age, filed January 07, 2005, to make the above-identified application special.

A grantable petition to make special under 37 C.F.R. § 1.102(c) and in accordance with M.P.E.P. § 708.02, Section IV must include a showing, as by a birth certificate or the applicant's statement, that the applicant is sixty five (65) years of age or more. No fee is required for this petition.

The petition includes a copy of the birth certificate that the applicant, Elliot A. Gottfurcht, is over sixty five (65) years of age.

Accordingly, the petition is **GRANTED**. The application is being forwarded to the examiner for expedited prosecution.

for James R. Matthews
Vincent N. Trans
Special Program Examiner
Technology Center 2100
Computer Architecture, Software, and
Information Security
(571) 272-3613

UNITED STATES PATENT AND TRADEMARK OFFICE

Commissioner for Patents
United States Patent and Trademark Office
P.O. Box 1450
Alexandria, VA 22313-1450
www.uspto.gov

MORRISON & FOERSTER LLP
1650 TYSONS BOULEVARD
SUITE 300
MCLEAN VA 22102

COPY MAILED

MAY 30 2006

OFFICE OF PETITIONS

In re Application of
Elliot A. Gottfurcht
Application No. 10/646,066
Filed: August 21, 2003
Attorney Docket No. 15771.0008

DECISION ON PETITION
TO WITHDRAW
FROM RECORD

This is a decision on the Request to Withdraw as attorney or agent of record under 37 C.F.R. § 1.36(b), filed December 9, 2005.

The petition is **NOT APPROVED**.

A grantable request to withdraw as attorney/agent of record must be signed by every attorney/agent seeking to withdraw or contain a clear indication that one attorney is signing on behalf of another/others. A request to withdraw will not be approved unless at least 30 (thirty) days would remain between the date of approval and the later of the expiration date of a time to file a response or the expiration date of the maximum time period which can be extended under 37 C.F.R. § 1.136(a).

The Office cannot approve the request at this time since the reasons provided do not meet any of the conditions under the mandatory or permissive categories enumerated in 37 CFR 10.40. Section 10.40 of Title 37 of the Code of Federal Regulation states, "[a] practitioner shall not withdraw from employment in a proceeding before the Office without permission from the Office[.]" More specifically, 37 CFR 10.40 states, "[i]f paragraph (b) of this section is not applicable, a practitioner may not request permission to withdraw in a matter pending before the Office unless such request or such withdrawal is" for one of the permissive reasons listed in 37 CFR 10.40(c). The reason set forth in the request, do not meet any of the conditions set forth in 37 CFR 10.40, since the Office have no evidence of a recorded assignment to **MallTV** for the above application.

All communications from the Office will continue to be directed to the below address of record until otherwise properly notified.

This application is being referred to Technology Center AU 3622 to consider the Response filed April 25, 2006 .

Telephone inquiries concerning this decision should be directed to the undersigned at 571-272-3208.

Karen Creasy
Petitions Examiner
Office of Petitions

Conferee:

cc:
STEPTOE AND JOHNSON LLP
1330 CONNECTICUT AVENUE, NW
WASHINGTON, DC 20036

UNITED STATES PATENT AND TRADEMARK OFFICE

Commissioner for Patents
United States Patent and Trademark Office
P.O. Box 1450
Alexandria, VA 22313-1450
www.uspto.gov

STEPTOE AND JOHNSON
1330 CONNECTICUT AVENUE, NW
WASHINGTON, DC 20036

COPY MAILED

JUL 0 5 2006

OFFICE OF PETITIONS

In re Application of
Elliot A. Gottfurcht
Application No. 10/646,066
Filed: August 21, 2003
Attorney Docket No. 15771.0008

: DECISION ON PETITION
: UNDER 37 CFR 1.78(a)(3)

This is a decision on the petition under 37 CFR 1.78(a)(3), filed April 25, 2006, to accept an unintentionally delayed claim under 35 U.S.C. § 120 for the benefit of priority to prior-filed nonprovisional Application No. 10/440,214, filed November 15, 1999, as set forth in the concurrently filed amendment.

The petition is **GRANTED**.

A petition for acceptance of a claim for late priority under 37 CFR 1.78(a)(3) is only applicable to those applications filed on or after November 29, 2000. Further, the petition is appropriate only after the expiration of the period specified in 37 CFR 1.78(a)(2)(ii). In addition, the petition under 37 CFR 1.78(a)(3) must be accompanied by:

(1) the reference required by 35 U.S.C. § 120 and 37 CFR 1.78(a)(2)(i) of the prior-filed application, unless previously submitted;
(2) the surcharge set forth in § 1.17(t); and
(3) a statement that the entire delay between the date the claim was due under 37 CFR 1.78(a)(2)(ii) and the date the claim was filed was unintentional. The Commissioner may require additional information where there is a question whether the delay was unintentional.

The instant nonprovisional application was filed after November 29, 2000, and the claim herein for the benefit of priority to the above-noted, prior-filed nonprovisional application is submitted after expiration of the period specified in 37 CFR 1.78(a)(2)(ii). Therefore, this is a proper petition under 37 CFR 1.78(a)(3).

The petition complies with the requirements for a grantable petition under 37 CFR 1.78(a)(3) in that (1) a reference to the above-noted, prior-filed nonprovisional application has been included in an amendment to the first sentence of the specification following the title, as provided by 37 CFR

1.78(a)(2)(iii); (2) the surcharge fee required by 37 CFR 1.17(t) has been submitted; and (3) the petition contains a proper statement of unintentional delay. Accordingly, having found that the instant petition for acceptance of an unintentionally delayed claim for the benefit of priority under 35 U.S.C. § 120 to the above-noted, prior-filed nonprovisional application satisfies the conditions of 37 CFR 1.78(a)(3), the petition is granted.

The granting of the petition to accept the delayed benefit claim to the above-noted, prior-filed application under 37 CFR 1.78(a)(3) should not be construed as meaning that the instant application is entitled to the benefit of the above-noted, prior-filed application. In order for the instant application to be entitled to the benefit of the above-noted, prior-filed application, all other requirements under 35 U.S.C. § 120 and 37 CFR 1.78(a)(1) and (a)(2) must be met. Similarly, the fact that the corrected Filing Receipt accompanying this decision on petition includes the above-noted, prior-filed application should not be construed as meaning that applicants are entitled to the claim for benefit of priority to the above-noted, prior-filed application noted thereon. Accordingly, the examiner will, in due course, consider this benefit claim and determine whether the instant application is entitled to the benefit of the earlier filing date.

A corrected Filing Receipt, which includes the priority claim to the above-noted, prior-filed nonprovisional application, accompanies this decision on petition.

Any inquiries concerning this decision may be directed to Wan Laymon (571) 272-3220. All other inquiries concerning either the examination procedures or status of the application should be directed to the Technology Center.

This matter is being referred to Technology Center Art Unit 3622 for appropriate action on the amendment filed April 25, 2006, including consideration by the examiner of applicant's entitlement to claim benefit of priority under 35 U.S.C. § 120 to the above-noted, prior-filed nonprovisional application.

/Frances Hicks for/
Randy Green
Supervisory Petitions Examiner
Office of Petitions

ATTACHMENT: Corrected Filing Receipt

UNITED STATES PATENT AND TRADEMARK OFFICE

UNITED STATES DEPARTMENT OF COMMERCE
United States Patent and Trademark Office
Address: COMMISSIONER FOR PATENTS
P.O. Box 1450
Alexandria, Virginia 22313-1450
www.uspto.gov

APPL NO.	FILING OR 371 (c) DATE	ART UNIT	FIL FEE REC'D	ATTY.DOCKET NO	DRAWINGS	TOT CLMS	IND CLMS
10/646,066	08/21/2003	3622	3868	15771.0008	36	22	3

CONFIRMATION NO. 8436

59791
STEPTOE and JOHNSON LLP
1330 Connecticut Avenue, NW
WASHINGTON, DC 20036

CORRECTED FILING RECEIPT

OC000000019228656

Date Mailed: 06/12/2006

Receipt is acknowledged of this regular Patent Application. It will be considered in its order and you will be notified as to the results of the examination. Be sure to provide the U.S. APPLICATION NUMBER, FILING DATE, NAME OF APPLICANT, and TITLE OF INVENTION when inquiring about this application. Fees transmitted by check or draft are subject to collection. Please verify the accuracy of the data presented on this receipt. **If an error is noted on this Filing Receipt, please mail to the Commissioner for Patents P.O. Box 1450 Alexandria Va 22313-1450. Please provide a copy of this Filing Receipt with the changes noted thereon. If you received a "Notice to File Missing Parts" for this application, please submit any corrections to this Filing Receipt with your reply to the Notice. When the USPTO processes the reply to the Notice, the USPTO will generate another Filing Receipt incorporating the requested corrections (if appropriate).**

Applicant(s)

Elliot A. Gottfurcht, Los Angeles, CA;

Power of Attorney: The patent practitioners associated with Customer Number **25227**.

Domestic Priority data as claimed by applicant

This application is a CIP of 09/518,015 03/03/2000 PAT 7,020,845
which is a CIP of 09/440,214 11/15/1999 PAT 6,600,497

Foreign Applications

If Required, Foreign Filing License Granted: 11/15/2003

The country code and number of your priority application, to be used for filing abroad under the Paris Convention, is US10/646,066

Projected Publication Date: Not Applicable

Non-Publication Request: No

Early Publication Request: No

**** SMALL ENTITY ****

Title

Method to generate advertising revenue based on time and location

Preliminary Class

705

PROTECTING YOUR INVENTION OUTSIDE THE UNITED STATES

Since the rights granted by a U.S. patent extend only throughout the territory of the United States and have no effect in a foreign country, an inventor who wishes patent protection in another country must apply for a patent in a specific country or in regional patent offices. Applicants may wish to consider the filing of an international application under the Patent Cooperation Treaty (PCT). An international (PCT) application generally has the same effect as a regular national patent application in each PCT-member country. The PCT process **simplifies** the filing of patent applications on the same invention in member countries, but **does not result** in a grant of "an international patent" and does not eliminate the need of applicants to file additional documents and fees in countries where patent protection is desired.

Almost every country has its own patent law, and a person desiring a patent in a particular country must make an application for patent in that country in accordance with its particular laws. Since the laws of many countries differ in various respects from the patent law of the United States, applicants are advised to seek guidance from specific foreign countries to ensure that patent rights are not lost prematurely.

Applicants also are advised that in the case of inventions made in the United States, the Director of the USPTO must issue a license before applicants can apply for a patent in a foreign country. The filing of a U.S. patent application serves as a request for a foreign filing license. The application's filing receipt contains further information and guidance as to the status of applicant's license for foreign filing.

Applicants may wish to consult the USPTO booklet, "General Information Concerning Patents" (specifically, the section entitled "Treaties and Foreign Patents") for more information on timeframes and deadlines for filing foreign patent applications. The guide is available either by contacting the USPTO Contact Center at 800-786-9199, or it can be viewed on the USPTO website at http://www.uspto.gov/web/offices/pac/doc/general/index.html.

For information on preventing theft of your intellectual property (patents, trademarks and copyrights), you may wish to consult the U.S. Government website, http://www.stopfakes.gov. Part of a Department of Commerce initiative, this website includes self-help "toolkits" giving innovators guidance on how to protect intellectual property in specific countries such as China, Korea and Mexico. For questions regarding patent enforcement issues, applicants may call the U.S. Government hotline at 1-866-999-HALT (1-866-999-4158).

LICENSE FOR FOREIGN FILING UNDER
Title 35, United States Code, Section 184
Title 37, Code of Federal Regulations, 5.11 & 5.15

GRANTED

The applicant has been granted a license under 35 U.S.C. 184, if the phrase "IF REQUIRED, FOREIGN FILING LICENSE GRANTED" followed by a date appears on this form. Such licenses are issued in all applications where the conditions for issuance of a license have been met, regardless of whether or not a license may be required as set forth in 37 CFR 5.15. The scope and limitations of this license are set forth in 37 CFR 5.15(a) unless an earlier license has been issued under 37 CFR 5.15(b). The license is subject to revocation upon written notification. The date indicated is the effective date of the license, unless an earlier license of similar scope has been granted under 37 CFR 5.13 or 5.14.

This license is to be retained by the licensee and may be used at any time on or after the effective date thereof unless it is revoked. This license is automatically transferred to any related applications(s) filed under 37 CFR 1.53(d). This license is not retroactive.

The grant of a license does not in any way lessen the responsibility of a licensee for the security of the subject matter as imposed by any Government contract or the provisions of existing laws relating to espionage and the national security or the export of technical data. Licensees should apprise themselves of current regulations especially with respect to certain countries, of other agencies, particularly the Office of Defense Trade Controls, Department of State (with respect to Arms, Munitions and Implements of War (22 CFR 121-128)); the Bureau of Industry and Security, Department of Commerce (15 CFR parts 730-774); the Office of Foreign Assets Control, Department of Treasury (31 CFR Parts 500+) and the Department of Energy.

NOT GRANTED

No license under 35 U.S.C. 184 has been granted at this time, if the phrase "IF REQUIRED, FOREIGN FILING LICENSE GRANTED" DOES NOT appear on this form. Applicant may still petition for a license under 37 CFR 5.12, if a license is desired before the expiration of 6 months from the filing date of the application. If 6 months has lapsed from the filing date of this application and the licensee has not received any indication of a secrecy order under 35 U.S.C. 181, the licensee may foreign file the application pursuant to 37 CFR 5.15(b).

UNITED STATES PATENT AND TRADEMARK OFFICE

Commissioner for Patents
United States Patent and Trademark Office
P.O. Box 1450
Alexandria, VA 22313-1450
www.uspto.gov

SEP 10 2004

MORRISON & FOERSTER LLP
425 MARKET STREET
SAN FRANCISCO CA 94105-2482

In re Application of	:
Michael W. Graham et al.	:
Serial No.: 10/646,070	: PETITION TO MAKE SPECIAL
Filed: August 22, 2003	:
Attorney Docket No.: 546322000303	:

This is in response to applicants' petition filed July 27, 2004, to make the above-identified application special under the provisions of 37 CFR 1.102(d), based on inventions relating to HIV/AIDS. The $130.00 petition fee as required by 37 CFR 1.17(h) will be charged to applicant's Deposit Account No. 03-1952, as directed.

Applicant has satisfied the provisions set forth in M.P.E.P. 708.02, X. Therefore, the petition is **GRANTED**.

The application will be forwarded the examiner for action on the merits commensurate with this decision.

Should there be any questions with regard to this letter please contact Marianne C. Seidel by letter addressed to the Director, Technology Center 1600, P.O. Box 1450, Alexandria, VA 22313-1450, or by telephone at 571-272-0584 or by facsimile transmission at the general Office facsimile number, (703) 872-9306.

Marianne C. Seidel
Special Program Examiner
Technology Center 1600

UNITED STATES PATENT AND TRADEMARK OFFICE

Commissioner for Patents
United States Patent and Trademark Office
P.O. Box 1450
Alexandria, VA 22313-1450
www.uspto.gov

B. TODD PATTERSON
PATTERSON & SHERIDAN, LLP
3040 POST OAK BOULEVARD
SUITE 1500
HOUSTON TX 77056--658

COPY MAILED

MAY 19 2009

OFFICE OF PETITIONS

In re Application of	:	
Graham et al.	:	DECISION ON PETITION
Application No. 10/646,070	:	TO WITHDRAW
Filed: August 22, 2003	:	FROM RECORD
Attorney Docket No. 0763/74768-BA-PCT-US/JPW/	:	

This is a decision on the Request to Withdraw as attorney or agent of record under 37 C.F.R. § 1.36(b), filed June 12, 2006.

The request is **NOT APPROVED** because it is moot.

A review of the file record indicates that on June 15, 2006 the power of attorney was revoked by the assignee of the patent application. Accordingly, the request to withdraw under 37 C.F.R. § 1.36(b) is moot.

All future communications from the Office will be directed to the below-listed address until otherwise notified by applicant.

Telephone inquires concerning this decision should be directed to the undersigned at 571-272- 7751. All other inquires concerning either the examination or status of the application should be directed to the Technology Center.

Joan Olszewski
Petitions Examiner
Office of Petitions

cc: Cooper & Dunham, LLP
30 Rockefeller Plaza
20th Floor
New York NY 10112

UNITED STATES PATENT AND TRADEMARK OFFICE

Commissioner for Patents
United States Patent and Trademark Office
P.O. Box 1450
Alexandria, VA 22313-1450
www.uspto.gov

COPY MAILED

FEB 23 2007

OFFICE OF PETITIONS

HEWLETT PACKARD COMPANY
PO BOX 272400, 3404 E. HARMONY ROAD
INTELLECTUAL PROPERTY ADMINISTRATION
FORT COLLINS CO 80527-2400

In re Application of :
Andrew H. Barr et al :
Application No. 10/646,079 : ON PETITION
Filed: August 22, 2003 :
Attorney Docket No. 200206933-1 :

This is a decision on the petition, filed February 23, 2007, under 37 CFR 1.313(c)(2) to withdraw the above-identified application from issue after payment of the issue fee.

The petition is **GRANTED**.

The above-identified application is withdrawn from issue for consideration of a submission under 37 CFR 1.114 (request for continued examination). See 37 CFR 1.313(c)(2).

Petitioner is advised that the issue fee paid on January 26, 2007 in the above-identified application cannot be refunded. If, however, the above-identified application is again allowed, petitioner may request that it be applied towards the issue fee required by the new Notice of Allowance.[1]

Telephone inquiries should be directed to the undersigned at (571) 272-3208.

The examiner of Technology Center AU 2116 will consider the request for continued examination under 37 CFR 1.114.

Karen Creasy

Karen Creasy
Petitions Examiner
Office of Petitions

[1] The request to apply the issue fee to the new Notice may be satisfied by completing and returning the new Issue Fee Transmittal Form PTOL-85(b), which includes the following language thereon: "Commissioner for Patents is requested to apply the Issue Fee and Publication Fee (if any) or re-apply any previously paid issue fee to the application identified above." Petitioner is advised that, whether a fee is indicated as being due or not, the Issue Fee Transmittal Form **must** be completed and timely submitted to avoid abandonment. Note the language in bold text on the first page of the Notice of Allowance and Fee(s) Due (PTOL-85).

SPE RESPONSE FOR CERTIFICATE OF CORRECTION

Paper No.: _____

DATE : 4/28/09

TO SPE OF : ART UNIT 2116 Nitin Patel

SUBJECT : Request for Certificate of Correction for Appl. No.: 10/641079 Patent No.: 7206960

Please respond to this request for a certificate of correction within 7 days.

FOR IFW FILES:

Please review the requested changes/corrections as shown in the **COCIN** document(s) in the IFW application image. No new matter should be introduced, nor should the scope or meaning of the claims be changed.

Please complete the response (see below) and forward the completed response to scanning using document code **COCX**.

FOR PAPER FILES:

Please review the requested changes/corrections as shown in the attached certificate of correction. Please complete this form (see below) and forward it with the file to:

Certificates of Correction Branch (CofC)
South Tower - 9A22
Palm Location 7580

N. Dell

Certificates of Correction Branch

703-308-9390 ext. _____

Thank You For Your Assistance

The request for issuing the above-identified correction(s) is hereby:

Note your decision on the appropriate box.

- ☑ **Approved** — **All** changes apply.
- ☐ **Approved in Part** — Specify below which changes **do not** apply.
- ☐ **Denied** — State the reasons for denial below.

Comments: _____

/Thomas Lee/ 2116

SPE **Art Unit**

SPE RESPONSE FOR CERTIFICATE OF CORRECTION

Paper No.: _____

DATE : 8/28/09

TO SPE OF : ART UNIT 2116 Nitin Patel

SUBJECT : Request for Certificate of Correction for Appl. No.: 10/646079 Patent No.: 7206960

Please respond to this request for a certificate of correction within 7 days.

FOR IFW FILES:

Please review the requested changes/corrections as shown in the **COCIN** document(s) in the IFW application image. No new matter should be introduced, nor should the scope or meaning of the claims be changed.

Please complete the response (see below) and forward the completed response to scanning using document code **COCX**.

FOR PAPER FILES:

Please review the requested changes/corrections as shown in the attached certificate of correction. Please complete this form (see below) and forward it with the file to:

Certificates of Correction Branch (CofC)
South Tower - 9A22
Palm Location 7580

[signature]
Certificates of Correction Branch
703-308-9390 ext. _____

Thank You For Your Assistance

The request for issuing the above-identified correction(s) is hereby:
Note your decision on the appropriate box.

- ☑ **Approved** — **All** changes apply.
- ☐ **Approved in Part** — Specify below which changes **do not** apply.
- ☐ **Denied** — State the reasons for denial below.

Comments: _____

/Thomas Lee/
SPE

2116
Art Unit

UNITED STATES PATENT AND TRADEMARK OFFICE

Commissioner for Patents
United States Patent and Trademark Office
P.O. Box 1450
Alexandria, VA 22313-1450
www.uspto.gov

SCHWEGMAN, LUNDBERG, WOESSNER & KLUTH
1600 TCF TOWER121
SOUTH EIGHT STREET
MINNEAPOLIS MN 55402

COPY MAILED

AUG 1 8 2006

OFFICE OF PETITIONS

In re Application of
Martin B. Wolk et al.
Application No. 10/646,093
Filed: August 22, 2003
Attorney Docket No. 58626US002

ON PETITION

This is a decision on the petition filed May 16, 2006, to withdraw the holding of abandonment in accordance with the reasoning of the decision in Delgar Inc. v. Schuyler, 172 USPQ 513, and is treated under 37 CFR 1.181(b). In the alternative, the petition is filed under 37 CFR 1.137(a).

The petition under 37 CFR 1.181(b) is **GRANTED**.
The petition under 37 CFR 1.137(a) is **DISMISSED** as involving moot issues.

This application became abandoned for failure to file a proper response to an Ex Parte Quayle Office Action mailed September 13, 2005. The office communication set a two month period for response. No response having been timely filed, this application became abandoned November 15, 2005. Accordingly, a Notice of Abandonment was mailed April 19, 2006. his application therefore became abandoned on July 25, 2005. Accordingly, a Notice of Abandonment was mailed October 13, 2005.

The file record discloses that the Office Action was mailed to the address of record. However, petitioner contends that it was not received. In support, petitioner indicates that a search of the file jacket and the docket records revealed that the office action was not received and submits copies of pages from the docketing system, wherein receipt of the office action would have been entered, had it been received, to substantiate the claim. Additionally, petitioners have provided a statement from the Docket Administrator who outlines the docketing procedures to show that the office action was not received. The statement and attachments corroborate non-receipt of the Office Action.

In view of the facts set forth in the petition, it is concluded that the Office Action was never received. Accordingly, the holding of abandonment is withdrawn. As well, there is no need to treat the petition under 37 CFR 1.137(a). No petition fee is due and none will be charged.

This matter is being referred to Technology Center 2879 for appropriate action on the amendment filed May 16, 2006 with the instant petition.

Telephone inquiries concerning this matter should be directed to the undersigned Petitions Attorney at (571) 272-3212.

Patricia Faison-Ball
Senior Petitions Attorney
Office of Petitions

UNITED STATES PATENT AND TRADEMARK OFFICE

Commissioner for Patents
United States Patent and Trademark Office
P.O. Box 1450
Alexandria, VA 22313-1450
www.uspto.gov

KNOBBE MARTENS OLSON & BEAR LLP
2040 MAIN STREET
FOURTEENTH FLOOR
IRVINE CA 92614

COPY MAILED

OCT 3 1 2007

OFFICE OF PETITIONS

In re Application of :
Harry Liu et al :
Application No. 10/646,103 : DECISION GRANTING PETITION
Filed: August 22, 2003 : UNDER 37 CFR 1.313(c)(2)
Attorney Docket No. MICRON.214DDV1 :

This is a decision on the petition under 37 CFR 1.313(c)(2), filed October 29, 2007, to withdraw the above-identified application from issue after payment of the issue fee.

The petition is **GRANTED**.

The above-identified application is withdrawn from issue for consideration of a submission under 37 CFR 1.114 (request for continued examination). *See* 37 CFR 1.313(c)(2).

Petitioner is advised that the issue fee paid on September 10, 2007 cannot be refunded. If, however, this application is again allowed, petitioner may request that it be applied towards the issue fee required by the new Notice of Allowance.[1]

Telephone inquiries should be directed to the undersigned at (571) 272-3208.

This application is being referred to Technology Center AU 2814 for processing of the request for continued examination under 37 CFR 1.114 and for consideration of the concurrently filed IDS.

Karen Creasy

Karen Creasy
Petitions Examiner
Office of Petitions

[1] *The request to apply the issue fee to the new Notice may be satisfied by completing and returning the new Part B – Fee(s) Transmittal Form (along with any balance due at the time of submission). Petitioner is advised that the Issue Fee Transmittal Form* ***must*** *be completed and timely submitted to avoid abandonment of the application.*

UNITED STATES PATENT AND TRADEMARK OFFICE

Commissioner for Patents
United States Patent and Trademark Office
P.O. Box 1450
Alexandria, VA 22313-1450
www.uspto.gov

POTOMAC PATENT GROUP, PLLC
P.O. BOX 270
FREDERICKSBURG VA 22404

COPY MAILED

OCT 21 2005

OFFICE OF PETITIONS

In re Application of	:	
Diggle et al.	:	
Application No. 10/646,137	:	ON PETITION
Filed: August 22, 2003	:	
Attorney Docket No. 0220-009	:	

This is a decision on the petition under 37 C.F.R. § 1.137(b), filed October 12, 2005 (previously submitted on June 1, 2005), to revive the above-identified application.

The petition is **GRANTED.**

This matter is being referred to the Publishing Division for processing into a patent.

Telephone inquiries regarding this decision should be directed to the undersigned at (571) 272-3282.

Liana Chase
Petitions Examiner
Office of Petitions

UNITED STATES PATENT AND TRADEMARK OFFICE

Commissioner for Patents
United States Patent and Trademark Office
P.O. Box 1450
Alexandria, VA 22313-1450
www.uspto.gov

FISH & RICHARDSON
225 FRANKLIN STREET
BOSTON MA 02110

COPY MAILED

JUN 29 2005

OFFICE OF PETITIONS

In re Application of :
Andreas Tauber :
Application No. 10/646,166 : ON PETITION
Filed: August 22, 2003 :
Attorney Docket No. 14163-02001/13477-RO :

This is a decision on the petition, filed June 23, 2005, under 37 CFR 1.313(c)(2) to withdraw the above-identified application from issue after payment of the issue fee.

The petition is **GRANTED.**

The above-identified application is withdrawn from issue for consideration of a submission under 37 CFR 1.114 (request for continued examination). See 37 CFR 1.313(c)(2).

Petitioner is advised that the issue fee paid on April 29, 2005 in the above-identified application cannot be refunded. If, however, the above-identified application is again allowed, petitioner may request that it be applied towards the issue fee required by the new Notice of Allowance.[1]

Telephone inquiries should be directed to the undersigned at (571) 272-3208.

The examiner of Technology Center AU 2827 will consider the request for continued examination under 37 CFR 1.114.

Karen Creasy

Karen Creasy
Petitions Examiner
Office of Petitions
Office of the Deputy Commissioner
for Patent Examination Policy

[1] The request to apply the issue fee to the new Notice may be satisfied by completing and returning the new Issue Fee Transmittal Form PTOL-85(b), which includes the following language thereon: "Commissioner for Patents is requested to apply the Issue Fee and Publication Fee (if any) or re-apply any previously paid issue fee to the application identified above." Petitioner is advised that, whether a fee is indicated as being due or not, the Issue Fee Transmittal Form **must** be completed and timely submitted to avoid abandonment. Note the language in bold text on the first page of the Notice of Allowance and Fee(s) Due (PTOL-85).

UNITED STATES PATENT AND TRADEMARK OFFICE

COMMISSIONER FOR PATENTS
UNITED STATES PATENT AND TRADEMARK OFFICE
P.O. BOX 1450
ALEXANDRIA, VA 22313-1450
www.uspto.gov
DW Feb-06

DELBERT LEE HARTMAN
68 JUNIPER HILLS
EDGEWOOD NM 87015

COPY MAILED

FEB 10 2006

OFFICE OF PETITIONS

In re Application of :
Delbert Lee Hartman :
Application No. 10/646,181 : ON PETITION
Filed: 25 August, 2003 :
For: TRASVERSE DISC MOTOR :

This is a decision on the paper filed on 19 January, 2006, which is treated as a petition to withdraw the holding of abandonment.

This application became abandoned on 29 August, 2005, for failure to file a proper reply to the Notice of Non-Compliant Amendment mailed on 28 July, 2005, which set a one (1) month shortened period for reply. No extensions of time in accordance with 37 CFR 1.136(a) were obtained. On 30 December, 2005, a Notice of Abandonment was mailed.

Petitioner asserts that a timely reply to the Notice of Non-Compliant Amendment was mailed via Certified Mail on 17 August, 2005, and was received in the USPTO on 22 August, 2005. In support, petitioner has provided a copy of a USPS postage receipt dated 17 August, 2005, and a certified mail return postcard stamped 22 August, 2005, by the USPTO. A copy of the response is provided with the present petition.

The arguments have been considered, but are not persuasive. The U.S. Patent and Trademark Office (Office) file is the official record of the papers filed in this application. A review of the papers filed reveals that no reply to the Notice of Non-Compliant Amendment was received in the USPTO on 22 August, 2005, or on any other date prior to the filing of the present petition. An applicant alleging that a paper was filed in the Office and later

misplaced has the burden of proving the allegation by a preponderance of the evidence. The fact that petitioner believes that the application was (or should have been) received in the Office on 22 August, 2005, is not more persuasive than the date the papers are shown to have been received in the official file. At best, the record shows that applicants intended to file the papers in question in the USPTO by first-class mail on or before 22 August, 2005, but the evidence, unfortunately, does not show that the USPTO timely received the response. Petitioner should also note that while there is no provision in the rules of patent practice permitting the Office to accord a filing date to application papers based on the date the papers were deposited in USPS Certified Mail service, the USPTO has a long-established and well publicized practice for *prima facie* establishing the date of receipt of correspondence that has either been mailed or otherwise delivered to the PTO, and is asserted to have been subsequently misplaced: the itemized postcard receipt practice of MPEP 503.[1] This practice requires that any paper(s) for which a receipt is desired be filed in the USPTO with a self-addressed postcard identifying the paper(s). A postcard receipt which itemizes and properly identifies the paper(s) which is being filed serves as *prima facie* evidence of receipt in the USPTO of all the items listed thereon on the date stamped thereon by the USPTO. However, due to the absence in the record of a postcard receipt itemized with respect to the patent-related papers that bears a USPTO date stamp of 22 August, 2005, showing that the response to the Office communication in question was received at the USPTO on the date alleged in the petition, the date of receipt must reasonably remain 19 January, 2006, the date that the record adequately shows that these papers, along with the present petition, were first received at the USPTO.

37 CFR 1.8 provides:

> (a) Except in the situations enumerated in paragraph (a)(2) of this section or as otherwise expressly excluded in this chapter, correspondence required to be filed in the U.S. Patent and Trademark Office within a set period of time will be considered as being timely filed if the procedure described in this section is followed. The actual date of receipt will be used for all other purposes.

---

[1] The public was afforded a "reminder" of the then extent post card receipt practice at 857 *Off. Gaz. Pat. Off.* 667 (*O.G.*) (Nov. 21, 1968). This specific notice is usually repeated annually, in a January "Consolidated Listing" section of the *O.G.* that contains important *O.G.* notices of continuing relevance.

> (1) Correspondence will be considered as being timely filed if:
> (i) The correspondence is mailed or transmitted prior to expiration of the set period of time by being:
> (A) Addressed as set out in § 1.1(a) and deposited with the U.S. Postal Service with sufficient postage as first class mail; or
> (B) Transmitted by facsimile to the Patent and Trademark Office in accordance with § 1.6(d); and
> (ii) The correspondence includes a certificate for each piece of correspondence stating the date of deposit or transmission. The person signing the certificate should have reasonable basis to expect that the correspondence would be mailed or transmitted on or before the date indicated.
>
> ...
>
> (b) In the event that correspondence is considered timely filed by being mailed or transmitted in accordance with paragraph (a) of this section, but not received in the U.S. Patent and Trademark Office after a reasonable amount of time has elapsed from the time of mailing or transmitting of the correspondence, or after the application is held to be abandoned, or after the proceeding is dismissed, terminated, or decided with prejudice, the correspondence will be considered timely if the party who forwarded such correspondence:
> (1) Informs the Office of the previous mailing or transmission of the correspondence promptly after becoming aware that the Office has no evidence of receipt of the correspondence;
> (2) Supplies an additional copy of the previously mailed or transmitted correspondence and certificate; and
> (3) Includes a statement which attests on a personal knowledge basis or to the satisfaction of the Director to the previous timely mailing or transmission. If the correspondence was sent by facsimile transmission, a copy of the sending unit's report confirming transmission may be used to support this statement.

The showing of record is that petitioner failed to utilize the Certificate of Mailing procedures.

As petitioner failed to avail himself of the protections set forth in 37 CFR 1.6, 1.8, and MPEP 503, petitioner has provided

no persuasive evidence that a reply was timely filed to the Notice mailed on 28 July, 2005.

Furthermore, with regard to the Notice of Abandonment, petitioners were advised in the Notice mailed on 28 July, 2005, of the deficiencies in their submission of 28 February, 2005. While the Office attempts to timely mail a Notice of Abandonment, it is under no obligation to do so. The failure to receive a Notice of Abandonment, or any deficiencies therein, do not constitute grounds for withdraw of the holding of abandonment.

In summary, petitioner has presented no evidence that a reply to the Notice mailed on 28 July, 2005, was filed. In this respect, while petitioner argues that he was not timely informed that a proper response was not received, it is noted that while the Office attempts to provide timely notification of an incomplete response, it is under no obligation to due so. Rather, it is petitioner's responsibility to file a complete and timely response.

As such the application is properly held abandoned.

The petition is **DISMISSED.**

The petitioner may want to consider filing a petition to revive under 37 C.F.R. 1.137(b). A copy of the petition form is enclosed for petitioner's reference.

Any request for reconsideration must be filed within **TWO (2) MONTHS** of the date of this decision.

Further correspondence with respect to this matter should be addressed as follows:

By mail: Mail Stop Petition
Commissioner for Patents
P.O. Box 1450
Alexandria, VA 22313-1450

By FAX: (571) 273-8300
Attn: Office of Petitions

By hand: Customer Service Window
Mail Stop Petition
Randolph Building
401 Dulany Street
Alexandria, VA 22314

Telephone inquiries related to this decision should be directed to the undersigned at 571-272-3231.

D Wood

Douglas I. Wood
Senior Petitions Attorney
Office of Petitions

Encl: PTO/SB/64

UNITED STATES PATENT AND TRADEMARK OFFICE

COMMISSIONER FOR PATENTS
UNITED STATES PATENT AND TRADEMARK OFFICE
P.O. BOX 1450
ALEXANDRIA, VA 22313-1450
www.uspto.gov
DIW May-06

DELBERT LEE HARTMAN
68 JUNIPER HILLS
EDGEWOOD NM 87015

COPY MAILED

MAY 26 2006

OFFICE OF PETITIONS

In re Application of :
Delbert Lee Hartman :
Application No. 10/646,181 : ON PETITION
Filed: 25 August, 2003 :
For: TRASVERSE DISC MOTOR :

This is a decision on the petition filed on 9 March, 2006, under 37 CFR 1.137(b),[1] to revive the above-identified application.

The petition is **GRANTED**.

This application became abandoned on 29 August, 2005, for failure to file a proper reply to the Notice of Non-Compliant Amendment mailed on 28 July, 2005, which set a one (1) month shortened period for reply. No extensions of time in accordance with 37 CFR 1.136(a) were obtained. On 30 December, 2005, a Notice of Abandonment was mailed. The petition to withdraw the holding of

---

[1] Effective December 1, 1997, the provisions of 37 CFR 1.137(b) now provide that where the delay in reply was unintentional, a petition may be filed to revive an abandoned application or a lapsed patent pursuant to 37 CFR 1.137(b). A grantable petition filed under the provisions of 37 CFR 1.137(b) must be accompanied by:

(1) the required reply, unless previously filed. In a nonprovisional application abandoned for failure to prosecute, the required reply may be met by the filing of a continuing application. In a nonprovisional utility or plant application filed on or after June 8, 1995, and abandoned for failure to prosecute, the required reply may also be met by the filing of a request for continuing examination in compliance with § 1.114. In an application or patent, abandoned or lapsed for failure to pay the issue fee or any portion thereof, the required reply must be the payment of the issue fee or any outstanding balance thereof. In an application, abandoned for failure to pay the publication fee, the required reply must include payment of the publication fee.

(2) the petition fee as set forth in 37 CFR 1.17(m);

(3) a statement that the entire delay in filing the required reply from the due date for the reply until the filing of a grantable petition pursuant to 37 CFR 1.137(b) was unintentional. The Commissioner may required additional information where there is a question whether the delay was unintentional; and

(4) any terminal disclaimer (and fee as set forth in 37 CFR 1.20(d)) required pursuant to 37 CFR 1.137(c)).

abandonment filed on 19 January, 2006, was dismissed on 10 February, 2006.

Petitioner asserts that that the amendment filed on 19 January, 2006, is the required reply.

The application is being forwarded to Technology Center Art Unit 3751 for further processing.

Telephone inquiries related to this decision should be directed to the undersigned at 571-272-3231.

D Wood

Douglas I. Wood
Senior Petitions Attorney
Office of Petitions

UNITED STATES PATENT AND TRADEMARK OFFICE

Commissioner for Patents
United States Patent and Trademark Office
P.O. Box 1450
Alexandria, VA 22313-1450
www.uspto.gov

JOSEPH S. TRIPOLI
THOMSON LICENSING INC.
2 INDEPENDENCE WAY, SUITE 2
P.O. BOX 5312
PRINCETON, NJ 08543-5312

COPY MAILED

JUL 2 1 2008

In re Application of :
Sebastien WEITBRUCH, et al :
Application No. 10/646,183 : ON PETITION
Filed: August 22, 2003 :
Attorney Docket No. PD020083 :

This is a decision on the petition under the unintentional provisions of 37 CFR 1.137(b), filed May 12, 2008, to revive the above-identified application.

The petition is **GRANTED**.

The application became abandoned for failure to timely file a reply within the meaning of 37 CFR 1.113 to the final Office action of September 24, 2007. The proposed reply required for consideration of a petition to revive must be a Notice of Appeal (and appeal fee required by 37 CFR 41.20(b)(2), an amendment that *prima facie* places the application in condition for allowance, a Request for Continued Examination and submission (37 CFR 1.114), or the filing of a continuing application under 37 CFR 1.53(b). See MPEP 711.03(c)(II)(A)(2). No extensions of time pursuant to the provisions of 37 CFR 1.136(a) were obtained. Accordingly, the date of abandonment of this application is December 25, 2007.

The petition satisfies the requirements of 37 CFR 1.137(b) in that petitioner has supplied (1) the reply in the form of a Request for Continued Examination (RCE) and fee of $810, and the submission required by 37 CFR 1.114; (2) the petition fee of $1540; and (3) the required statement of unintentional delay have been received.

There is no indication that the person signing the petition was ever given a power of attorney to prosecute the application. If the person signing the petition desires to receive future correspondence regarding this application, the appropriate power of attorney document must be submitted.

Telephone inquiries concerning this decision should be directed to Diane Goodwyn at (571) 272-6735.

This application is being referred to Technology Center 2629 for processing of the RCE and for appropriate action by the Examiner in the normal course of business on the amendment submitted in accordance with 37 CFR 1.114.

Chris Bottish

for Thurman Page
Petitions Examiner
Office of Petitions

UNITED STATES PATENT AND TRADEMARK OFFICE

COMMISSIONER FOR PATENTS
UNITED STATES PATENT AND TRADEMARK OFFICE
P.O. BOX 1450
ALEXANDRIA, VA 22313-1450
www.uspto.gov

MAIL

AUG 0 2 2004

DIRECTOR OFFICE
TECHNOLOGY CENTER 2600

GREENBERG TRAURIG LLP
2450 COLORADO AVENUE, SUITE 400E
SANTA MONICA CA 90404

In re Application of
Scott F. Watson, et al.
Application No. 10/646,192
Filed: August 21, 2003
For: **DIGITAL HOME MOVIE LIBRARY**

DECISION ON PETITION TO MAKE SPECIAL

This is a decision on the petition filed December 2, 2003 under Manual of Patent Examination Procedure §708.02, VIII requesting accelerated examination.

The petition under Manual of Patent Examination Procedure §708.02, VIII, must:
(1) be filed prior to receiving any examination by the examiner,
(2) be accompanied by the required fee- $130,
(3) the claims should be directed to a single invention (if it is determined that the claims pertain to more than one invention, then applicant will have to make an election without traverse or forfeit accelerated examination status),
(4) state that a pre-examination search was made, and fully discuss the search method employed, such as classes and subclasses searched, publications, Chemical abstracts, patents, etc. A search made by a foreign patent office satisfies this requirement,
(5) be accompanied by a copy of each of the references most closely related to the subject matter encompassed by the claims if said references are not already of record,
(6) fully discuss the references, pointing out with the particularity required by 37 C.F.R. §1.111 (b) and (c), how the claimed subject matter is patentable over the references.

The petition fails to meet requirements (4) and (6) above, insomuch as there is no description of the classes or subclasses that were searched. Furthermore, details of any text searches used absent a class/subclass search have not been provided. It is insufficient to state that a search was performed by a professional searcher. In addition, although the petition states that a discussion of the references with particular emphasis on how the claims distinguish from the references "..follows", no discussion accompanied the petition.

For the above stated reasons, the petition is **DENIED**.

Petitioner may submit a request for reconsideration within **TWO MONTHS** of the date of this decision. Any request for reconsideration should include a complete description of the search method employed, such as classes and subclasses searched, text keyword search, etc. and a complete discussion of each reference and how the claimed subject matter distinguishes over those references.

Dwayne D. Bost
Special Program Examiner
Technology Center 2600
Communications
(703) 305-4778

UNITED STATES PATENT AND TRADEMARK OFFICE

COMMISSIONER FOR PATENTS
UNITED STATES PATENT AND TRADEMARK OFFICE
P.O. BOX 1450
ALEXANDRIA, VA 22313-1450
www.uspto.gov

MAIL

NOV 2 - 2004

DIRECTOR OFFICE
TECHNOLOGY CENTER 2600

GREENBERG TRAURIG LLP
2450 COLORADO AVENUE, SUITE 400E
SANTA MONICA CA 90404

In re Application of :
Scott F. Watson, et al. :
Application No. 10/646,192 : DECISION ON PETITION TO
Filed: August 21, 2003 : MAKE SPECIAL
For: **DIGITAL HOME MOVIE LIBRARY**

This is a decision on the petition filed December 2, 2003, as supplemented on August 30, 2004, under Manual of Patent Examination Procedure §708.02, VIII requesting accelerated examination.

The petition under Manual of Patent Examination Procedure §708.02, VIII, must:
(1) be filed prior to receiving any examination by the examiner,
(2) be accompanied by the required fee- $130,
(3) the claims should be directed to a single invention (if it is determined that the claims pertain to more than one invention, then applicant will have to make an election without traverse or forfeit accelerated examination status),
(4) state that a pre-examination search was made, and fully discuss the search method employed, such as classes and subclasses searched, publications, Chemical abstracts, patents, etc. A search made by a foreign patent office satisfies this requirement,
(5) be accompanied by a copy of each of the references most closely related to the subject matter encompassed by the claims if said references are not already of record,
(6) fully discuss the references, pointing out with the particularity required by 37 C.F.R. §1.111 (b) and (c), how the claimed subject matter is patentable over the references.

The Petitioner has, in the combination of original petition and supplement to the original petition, met all the above-listed requirements. Accordingly, the petition is **GRANTED**.

The application will retain its special status throughout its entire prosecution, including any appeal to the Board of Patent Appeals and Interferences, subject only to diligent prosecution by the applicant.

Dwayne D. Bost
Special Program Examiner
Technology Center 2600
Communications
(703) 305-4778

UNITED STATES PATENT AND TRADEMARK OFFICE

Commissioner for Patents
United States Patent and Trademark Office
P.O. Box 1450
Alexandria, VA 22313-1450
www.uspto.gov

Date : June 9, 2007

Patent No. :7,067,007
Inventor(s) : Lothar Ackermann, et al.
Issued :June 27, 2006
Title :PROCESS AND DEVICE FOR GROWING SINGE CRYSTALS
Docket No. :WSP:217US

Re: Request for Certificate of Correction

Consideration has been given your request for the issuance of a certificate of correction for the above-identified patent under the provisions of 37 CFR 1.322 and/or 1.323.

Assignees' names and addresses (assignment data) printed in a patent are based *solely* on information supplied in the appropriate space for identifying the assignment data, i.e., item 3 of the Fee(s) Transmittal Form PTOL-85B. After payment of the issue fee, correction of assignment data submitted on the PTOL-85B can only be done by Certificate of Correction under 37 CFR 1.323, with a request under 37 CFR 3.81(b).

A request for a patent to be corrected to state the name of the assignee must:

A. state that the assignment was submitted for recordation as set forth in 37 CFR 3.11 before issuance of the patent;
B. include a request for a certificate of correction under 37 CFR 1.323 along with the fee set forth in 37 CFR 1.20(a); and
C. include the processing fee set forth in 37 CFR 1.17(i).

If the request is granted, Certificates of Correction Branch will be notified that a Certificate of Correction may be issued.

See Manual of Patent Examining Procedure, Section 1481.01 (Rev. 3) (Oct. 2005).

Applicant has not included items A and or C above, accordingly, the request for Certificate of Correction to add or change the assignee data is dismissed.

Any request under 37 CFR 3.81(b) should be directed to the following address or facsimile number:

By mail: Mail Stop PETITIONS
Commissioner for Patents
Post Office Box 1450
Alexandria, VA 22313-1450

By hand: Customer Service Window
Mail Stop Petitions
Randolph Building
401 Dulany Street
Alexandria, VA 22314

By fax: 571-273-8300
ATTN: Office of Petitions

If a fee (currently $100) was previously submitted for consideration of a Request for Certificate of Correction, under CFR 1.323, to correct assignment data, no additional fee is required.

Any inquiry concerning this communication should be directed to Ms. A. Green at (703) 308-9380 ext. 123.

For Cecelia Newman
Decisions & Certificates
of Correction Branch
(703) 308-9390 or (703) 308- 9380 ext. 123

Michael L. Dunn
Simpson & Simpson, PLLC
5555 Main Street
Williamsville, New York 14221

CBN/arg

UNITED STATES PATENT AND TRADEMARK OFFICE

Commissioner for Patents
United States Patent and Trademark Office
P.O. Box 1450
Alexandria, VA 22313-1450
www.uspto.gov

GREATBATCH LTD.
10,000 WEHRLE DRIVE
CLARENCE, NY 14031

COPY MAILED

APR 0 3 2008

OFFICE OF PETITIONS

In re Application of :
GAN, et al. :
Application No. 10/646,216 : DECISION ON PETITION
Filed: August 22, 2003 :
Attorney Docket No. **37505.0274** :

This is a decision on the petition under the unintentional provisions of 37 CFR 1.137(b), filed June 19, 2007, to revive the above-identified application.

The petition is **GRANTED.**

This application became abandoned for failure to timely pay the issue and publication fees on or before April 4, 2007, as required by the Notice of Allowance and Fee(s) Due, mailed January 4, 2007. Accordingly, the date of abandonment of this application is April 5, 2007.

The petition satisfies the requirements of 37 CFR 1.137(b) in that petitioner has supplied (1) the reply in the form of payment of the issue fee of $1400, the publication fee of $300, (2) the petition fee of $1500; and (3) an adequate statement of unintentional delay.

The filed does not indicate a change of address has been submitted, although the address given on the petition differs from the address of record. If appropriate, a change of address should be filed in accordance with MPEP 601.03. A courtesy copy of this decision is being mailed to the address given on the petition; however, the office will mail all future correspondence solely to the address of record.

Telephone inquiries concerning this decision should be directed to Monica A. Graves at (571) 272-7253.

This application is being referred to the Office of Data Management for processing into a patent.

Sherry D. Brinkley
Petitions Examiner
Office of Petitions

cc: **MICHAEL F. SCALISE**
9645 WEHRLE DRIVE
CLARENCE, NY 14031

UNITED STATES PATENT AND TRADEMARK OFFICE

COMMISSIONER FOR PATENTS
UNITED STATES PATENT AND TRADEMARK OFFICE
P.O. BOX 1450
ALEXANDRIA, VA 22313-1450
www.uspto.gov

MCANDREWS HELD & MALLOY, LTD
500 WEST MADISON STREET
SUITE 3400
CHICAGO, IL 60661

COPY MAILED
AUG 1 0 2006
OFFICE OF PETITIONS

In re Application of :
Shao-Chun Chen :
Application No. 10/646,230 : DECISION GRANTING PETITION
Filed: August 22, 2003 : UNDER 37 CFR 1.137(b)
Attorney Docket No. 14312US02 :

This is a decision on the petition, filed June 15, 2006, which is being treated as a petition under 37 CFR 1.137(b) to revive the instant nonprovisional application for failure to timely notify the U.S. Patent and Trademark (USPTO) of the filing of an application in a foreign country, or under a multinational treaty that requires publication of applications eighteen months after filing. *See* 37 CFR 1.137(f).

The petition is **GRANTED**.

Petitioner states that the instant nonprovisional application is the subject of an application filed in an eighteen month publication country on February 10, 2006. However, the USPTO was unintentionally not notified of this filing within 45 days subsequent to the filing of the subject application in an eighteen month publication country.

In view of the above, this application became abandoned pursuant to 35 U.S.C. §122(b)(2)(B)(iii) and 37 CFR 1.213(c) for failure to timely notify the Office of the filing of an application in a foreign country or under a multilateral international agreement that requires publication of applications 18 months after filing.

A petition to revive an application abandoned pursuant to 35 U.S.C. § 122(b)(2)(B)(iii) for failure to notify the USPTO of a foreign filing must be accompanied by:

(1) the required reply which is met by the notification of such filing in a foreign country or under a multinational treaty;
(2) the petition fee as set forth in 37 CFR 1.17(m); and
(3) a statement that the entire delay in filing the required reply from the due date of the reply until the filing of a grantable petition was unintentional.

The petition has been found to be in compliance with 37 CFR 1.137(b). Accordingly, the failure to timely notify the USPTO of a foreign or international filing within 45 days after the date of filing of such foreign or international application as provided by 35 U.S.C. § 122(b)(2)(B)(iii) and 37 CFR 1.213(c) is accepted as having been unintentionally delayed.

The previous Request and Certification under 35 U.S.C. § 122(b)(2)(B)(i) has been rescinded. A Notice Regarding Rescission of Nonpublication Request which sets forth the projected publication date of November 16, 2006 accompanies this decision on petition.

Any inquiries concerning this decision may be directed to the undersigned at (571) 272-3204.

This application is being referred to the Technology Center 2617.

Sherry D. Brinkley
Petitions Examiner
Office of Petitions

ATTACHMENT: Notice Regarding Rescission of Nonpublication Request

UNITED STATES PATENT AND TRADEMARK OFFICE

UNITED STATES DEPARTMENT OF COMMERCE
United States Patent and Trademark Office
Address: COMMISSIONER FOR PATENTS
P.O. Box 1450
Alexandria, Virginia 22313-1450
www.uspto.gov

APPLICATION NUMBER	FILING/RECEIPT DATE	FIRST NAMED APPLICANT	ATTY. DOCKET NO.
10/646,230	08/22/2003	Shao-Chun Chen	14312US02

CONFIRMATION NO. 1388

23446
MCANDREWS HELD & MALLOY, LTD
500 WEST MADISON STREET
SUITE 3400
CHICAGO, IL 60661

Date Mailed: 08/09/2006

Communication Regarding Rescission Of Nonpublication Request and/or Notice of Foreign Filing

Applicant's rescission of the previously-filed nonpublication request and/or notice of foreign filing is acknowledged. The paper has been reflected in the Patent and Trademark Office's (USPTO's) computer records so that the earliest possible projected publication date can be assigned.

The projected publication date is 11/16/2006.

If applicant rescinded the nonpublication request before or on the date of "foreign filing,"[1] then no notice of foreign filing is required.

If applicant foreign filed the application after filing the above application and before filing the rescission, and the rescission did not also include a notice of foreign filing, then a notice of foreign filing (not merely a rescission) is required to be filed within 45 days of the date of foreign filing. See 35 U.S.C. § 122(b)(2)(B)(iii), and Clarification of the United States Patent and Trademark Office's Interpretation of the Provisions of 35 U.S.C. § 122(b)(2)(B)(ii)-(iv), 1272 Off. Gaz. Pat. Office 22 (July 1, 2003).

If a notice of foreign filing is required and is not filed within 45 days of the date of foreign filing, then the application becomes abandoned pursuant to 35 U.S.C. § 122(b)(2)(B)(iii). In this situation, applicant should either file a petition to revive or notify the Office that the application is abandoned. See 37 CFR 1.137(f). Any such petition to revive will be forwarded to the Office of Petitions for a decision. Note that the filing of the petition will not operate to stay any period of reply that may be running against the application.

Questions regarding petitions to revive should be directed to the Office of Petitions at (571) 272-3282. Questions regarding publications of patent applications should be directed to the patent application publication hotline at (703) 605-4283 or by e-mail pgpub@uspto.gov.

[1] Note, for purpose of this notice, that "foreign filing" means "filing an application directed to the same invention in another country, or under a multilateral international agreement, that requires publication of applications 18 months after filing".

UNITED STATES PATENT AND TRADEMARK OFFICE

Commissioner for Patents
United States Patent and Trademark Office
P.O. Box 1450
Alexandria, VA 22313-1450
www.uspto.gov

VENABLE LLP
P.O. BOX 34385
WASHINGTON DC 20043-9998

COPY MAILED

APR 0 4 2008

OFFICE OF PETITIONS

In re Application of :
Thomas B. Garman :
Application No. 10/646,245 : ON PETITION
Filed: August 22, 2003 :
Attorney Docket No. 29953-209459 :

This is a decision on the petition under the unintentional provisions of 37 CFR 1.137(b), filed July 19, 2007, to revive the above-identified application.

The petition is **DISMISSED**.

Any request for reconsideration of this decision must be submitted within TWO (2) MONTHS from the mail date of this decision. Extensions of time under 37 CFR 1.136(a) are permitted. The reconsideration request should include a cover letter entitled "Renewed Petition under 37 CFR 1.137(b)." This is **not** a final agency action within the meaning of 5 U.S.C. § 704.

The application became abandoned for failure to reply in a timely manner to the non-final Office action mailed June 28, 2006, which set a shortened statutory period for reply of three (3) months. No extensions of time under the provisions of 37 CFR 1.136(a) were obtained. Accordingly, the application became abandoned on September 29, 2006.

A grantable petition under 37 CFR 1.137(b) must be accompanied by: (1) the required reply, unless previously filed; (2) the petition fee as set forth in 37 CFR 1.17(m); (3) a statement that the entire delay in filing the required reply from the due date for the reply until the filing of a grantable petition pursuant to 37 CFR 1.137(b) was unintentional; and (4) any terminal disclaimer (and fee as set forth in 37 CFR 1.20(d)) required by 37 CFR 1.137(d). Where there is a question as to whether either the abandonment or the delay in filing a petition under 37 CFR 1.137 was unintentional, the Director may require additional information. See MPEP 711.03(c)(II)(C) and (D). The instant petition lacks item(s) (3).

Petitioner, through the affidavit of Jodi L. Yingling (Yingling), asserts the delay was unintentional in that the patent owner had an obligation to notify the licensee if the patent owner declined to continue to prosecute the application and failed to do so. With respect to the affidavit of Yingling, it is noted Yingling does not appear to be the party having the right or authority to reply to avoid abandonment (or not reply) of the application as Yingling is neither an applicant for patent, an intervening assignee of the application, or other party in interest. While, Yingling states the patent owner had an obligation to notify the licensee if the patent owner declined to continue to prosecute the application and failed to do so, Yingling has provided no evidence of such an agreement. Accordingly, statements from all persons involved in the abandonment of the application including Thomas Garman, Stuart I. Smith, Ryan M. Flandro and James T. Carmichael and what they knew with respect to assignments, license agreements, and abandonment with respect to the application are required. Petitioner should further explain why the decision to abandon the instant application should not be binding on all parties and why the decision to abandon the instant application was not an intentional delay.

Petitioner has not shown to the satisfaction of the Director that the entire delay herein was unintentional within the meaning of 35 U.S.C. § 41(a)(7) and 37 CFR 1.137(b).

35 U.S.C. § 41(a)(7) applies to the situation of the above-identified application (i.e., to the revival of an abandoned application), however, it precludes the Director from reviving the above-identified application. The patent statute at 35 U.S.C. § 41(a)(7) authorizes the Director to revive an "unintentionally abandoned application." The legislative history of Public Law 97-247 reveals that the purpose of 35 U.S.C. § 41(a)(7) is to permit the Office to have more discretion than in 35 U.S.C. §§ 133 or 151 to revive abandoned applications in appropriate circumstances, but places a limit on this discretion, stating that "[u]nder this section a petition accompanied by either a fee of $500 or a fee of $50 would not be granted where the abandonment or the failure to pay the fee for issuing the patent was intentional as opposed to being unintentional or unavoidable."[emphasis added]. See H.R. Rep. No. 542, 97th Cong., 2d Sess. 6-7 (1982), reprinted in 1982 U.S.C.C.A.N. 770-71. The revival of an intentionally abandoned application is

antithetical to the meaning and intent of the statute and regulation.

35 U.S.C. § 41(a)(7) authorizes the Commissioner to accept a petition "for the revival of an unintentionally abandoned application for a patent." As amended December 1, 1997, 37 CFR 1.137(b)(3) provides that a petition under 37 CFR 1.137(b) must be accompanied by a statement that the delay was unintentional, but provides that "[t]he Commissioner may require additional information where there is a question whether the delay was unintentional." Where there is a question whether the delay was unintentional, the petitioner must meet the burden of establishing that the delay was unintentional within the meaning of 35 U.S.C. § 41(a)(7) and 37 CFR 1.137(b). See In re Application of G, 11 USPQ2d 1378, 1380 (Comm'r Pats. 1989). Here, the showing is that applicant intentionally discontinued prosecution and permitted the application to become abandoned, due to its own conclusion that the application was not worth pursuing.

The showing is further that applicant made no effort to seek revival until after becoming aware of what petitioner characterizes as an "error". The language of both 35 USC 41(a)(7) and 37 CFR 1.137(b) are clear and unambiguous, and furthermore, without qualification. That is, the delay in filing the reply during prosecution, as well as in filing the petition seeking revival, must have been, without qualification, "unintentional" for the reply to now be accepted on petition. The Office requires that the entire delay be at least unintentional as a prerequisite to revival of an abandoned application to prevent abuse and injury to the public. See H.R. Rep. No. 542, 97th Cong., 2d Sess. 7 (1982), reprinted in 1982 U.S.C.C.A.N. 771 ("[i]n order to prevent abuse and injury to the public the Commissioner . . . could require applicants to act promptly after becoming aware of the abandonment"). The December 1997 change to 37 CFR 1.137 did not create any new right to overcome an intentional delay in seeking revival, or in renewing an attempt at seeking revival, of an abandoned application. See Changes to Patent Practice and Procedure; Final Rule Notice, 62 Fed. Reg. 53131, 53160 (October 10, 1997), 1203 Off. Gaz. Pat. Office 63, 87 (October 21, 1997).

However, both the delay herein in filing the reply during prosecution, and in filing the petition after abandonment, are inconsistent with a finding that the entire delay herein was unintentional, such that revival is proper. Simply put, a course

of conduct resulting in a delay that is, as here, purposefully chosen does not qualify as unintentional delay.

It is further noted that 35 U.S.C. § 41(a)(7) does not require an affirmative finding that the delay was intentional, but only an explanation as to why the petitioner has failed to carry his or her burden to establish that the delay was unintentional. Cf. Commissariat A. L'Energie Atomique v. Watson, 274 F.2d 594, 597, 124 USPQ 126, 128 (D.C. Cir. 1960)(35 U.S.C. § 133 does not require the Commissioner to affirmatively find that the delay was avoidable, but only to explain why the applicant's petition was unavailing); see also In re Application of G, supra (petition under 37 CFR 1.137(b) denied because the applicant failed to carry the burden of proof to establish that the delay was unintentional).

Here, while petitioner contends that the failure to reply during the pendency of the application was an "error", petitioner nevertheless did not even seek revival until there was a change in circumstance long after abandonment, i.e., until petitioner became aware that the licensee was not notified. However, a change in circumstances that occurred subsequent to the abandonment of an application does not render "unintentional" the delay resulting from a previous deliberate decision to permit an application to be abandoned. These matters simply confuse the question of whether there was a deliberate decision not to continue the prosecution of an application with why there was a deliberate decision not to continue the prosecution of an application. A delay resulting from a deliberately chosen course of action on the part of the applicant does not become an "unintentional" delay within the meaning of 37 CFR 1.137(b) because the applicant does not consider the claims to be patentable over the references relied upon in an outstanding Office action.

While the entire record has been carefully reviewed, the showing of record is inconsistent with a finding that the entire delay herein was unintentional:

> Where the applicant deliberately permits an application to become abandoned (e.g., due to a conclusion that the claims are unpatentable, that a rejection in an Office action cannot be overcome, or that the invention lacks sufficient commercial value to justify continued prosecution), the abandonment of such application is considered to be a deliberately chosen course of action, and the resulting

> delay cannot be considered as "unintentional" within the meaning of 37 CFR 1.137(b). Likewise, where the applicant deliberately chooses not to seek or persist in seeking the revival of an abandoned application, or where the applicant deliberately chooses to delay seeking the revival of an abandoned application, the resulting delay in seeking revival of the abandoned application cannot be considered as "unintentional" within the meaning of 37 CFR 1.137(b). An intentional delay resulting from a deliberate course of action chosen by the applicant is not affected by: (1) the correctness of the applicant's (or applicant's representative's) decision to abandon the application or not to seek or persist in seeking revival of the application; (2) the correctness or propriety of a rejection, or other objection, requirement, or decision by the Office; or (3) the discovery of new information or evidence, or other change in circumstances subsequent to the abandonment or decision not to seek or persist in seeking revival. Obviously, delaying the revival of an abandoned application, by a deliberately chosen course of action, until the industry or a competitor shows an interest in the invention (a submarine application) is the antithesis of an "unavoidable" or "unintentional" delay. An intentional abandonment of an application, or an intentional delay in seeking either the withdrawal of a holding of abandonment in or the revival of an abandoned application, precludes a finding of unavoidable or unintentional delay pursuant to 37 CFR 1.137. See Changes to Patent Practice and Procedure; Final Rule Notice, 62 Fed. Reg. 53132 at 53158-59 (October 10, 1997), reprinted at 1203 Off. Gaz. Pat. Office, 65 at 86 (October 21, 1997) (citations omitted).

Where, as here, the applicant deliberately permits an application to become abandoned (e.g., due to a conclusion that the claims are unpatentable, that a rejection in an Office action cannot be overcome, or that the invention lacks sufficient commercial value to justify continued prosecution), the abandonment of such application is considered to be a deliberately chosen course of action, and the resulting delay cannot be considered as "unintentional" within the meaning of 37 CFR 1.137(b). See In re Application of G, supra. An intentional course of action is not rendered unintentional when, upon reconsideration, the applicant changes his or her mind as to the course of action that should have been taken. See In re Maldague, 10 USPQ2d 1477, 1478 (Comm'r Pat. 1988).

Further correspondence with respect to this matter should be addressed as follows:

By Mail: Mail Stop PETITION
Commissioner for Patents
P. O. Box 1450
Alexandria, VA 22313-1450

By hand: U. S. Patent and Trademark Office
Customer Service Window, Mail Stop Petitions
Randolph Building
401 Dulany Street
Alexandria, VA 22314

The centralized facsimile number is **(571) 273-8300.**

Telephone inquiries concerning this decision should be directed to the undersigned at (571) 272-3208.

Karen Creasy
Petitions Examiner
Office of Petitions

UNITED STATES PATENT AND TRADEMARK OFFICE

Commissioner for Patents
United States Patent and Trademark Office
P.O. Box 1450
Alexandria, VA 22313-1450
www.uspto.gov

PHARMACIA CORPORATION
GLOBAL PATENT DEPARTMENT
POST OFFICE BOX 1027
CHESTERFIELD, MO 63006

COPY MAILED

SEP 2 3 2005

OFFICE OF PETITIONS

In re Application of	:	
E. Ann Hallinan	:	
Application No. 10/646,266	:	ON PETITION
Filed: August 22, 2003	:	
Attorney Docket No. S0 3370/2 US	:	

This is a decision on the petition under 37 CFR 1.137(b), filed September 9, 2005, to revive the above-identified application.

The petition is **GRANTED**.

The above-identified application became abandoned for failure to submit the issue fee/publication fee in a timely manner in reply to the Notice of Allowance mailed February 16, 2005, which set a statutory period for reply of three (3) months. Accordingly, the above-identified application became abandoned on May 17, 2005.

Pursuant to petitioner's authorization, Deposit Account No. 19-1025 was charged $1,500.00 for the petition to revive an unintentionally abandoned application.

Telephone inquiries concerning this decision should be directed to Wan Laymon at (571) 272-3220.

This matter is being referred to Publishing Division.

Wan Laymon
Petitions Examiner
Office of Petitions
Office of the Deputy Commissioner
for Patent Examination Policy

UNITED STATES PATENT AND TRADEMARK OFFICE

Commissioner for Patents
United States Patent and Trademark Office
P.O. Box 1450
Alexandria, VA 22313-1450
www.uspto.gov

KLAUBER & JACKSON
411 HACKENSACK AVENUE
HACKENSACK, NJ 07601

COPY MAILED

AUG 0 3 2009

OFFICE OF PETITIONS

In re Application of :
Mark Marchionni, et al. :
Application No.: 10/646,268 : ON PETITION
Filed: August 22, 2003 :
Attorney Docket No.: 1094-1-028DIV :

This is a decision on the petition, filed July 30, 2009, under 37 CFR 1.313(c)(2) to withdraw the above-identified application from issue after payment of the issue fee.

The petition is **GRANTED**.

The above-identified application is withdrawn from issue for consideration of a submission under 37 CFR 1.114 (request for continued examination). See 37 CFR 1.313(c)(2).

Petitioner is advised that the issue fee paid on July 13, 2009, using a Certificate of Mailing or Transmission under 37 CFR 1.8 dated July 7, 2009, cannot be refunded. If, however, this application is again allowed, petitioner may request that it be applied towards the issue fee required by the new Notice of Allowance.[1]

Telephone inquiries relating to this decision should be directed to the undersigned at (571) 272-3204.

The application is being referred to Technology Center AU 1644 for further processing of the request for continued examination under 37 CFR 1.114 and for consideration of the concurrently filed Information Disclosure Statement (IDS).

/SDB/

Sherry D. Brinkley
Petitions Examiner
Office of Petitions

[1] *The request to apply the issue fee to the new Notice may be satisfied by completing and returning the new Part B – Fee(s) Transmittal Form (along with any balance due at the time of submission). Petitioner is advised that the Issue Fee Transmittal Form must be completed and timely submitted to avoid abandonment of the application.*

UNITED STATES PATENT AND TRADEMARK OFFICE

Commissioner for Patents
United States Patent and Trademark Office
P.O. Box 1450
Alexandria, VA 22313-1450
www.uspto.gov

ROTHWELL, FIGG, ERNST &
MANBECK, P.C.
1425 K STREET, N.W.
SUITE 800
WASHINGTON, DC 20005

COPY MAILED

SEP 16 2009

OFFICE OF PETITIONS

In re Patent No. 7,535,457	
Caplan et al.	
Issue Date: May 26, 2009	
Application No. 10/646,271	DECISION ON REQUEST FOR
Filed: August 22, 2003	RECONSIDERATION OF
Attorney Dkt. No. 0010.0006	PATENT TERM ADJUSTMENT
Title: Method and System For	
Special Examination of Vascular	
Walls Through Blood During	
Cardiac Motion	

This is in response to the "Petition to Correct Patent Term Adjustment" filed June 26, 2009. This petition is properly treated under 37 CFR 1.705(d). Patentees request that the patent term be adjusted from 843 days to 1294 days.

The request for reconsideration of patent term adjustment is **DISMISSED**.

On May 26, 2009, the above-identified application matured into US Patent No. 7,539,530 with a patent term adjustment of 830 days. This request for reconsideration of patent term adjustment (including the required fee) was timely filed within two months of the issue date of the patent. See 37 CFR 1.705(d).

Patentees request recalculation of the patent term adjustment based on the decision in Wyeth v. Dudas, 580 F. Supp. 2d 138, 88 U.S.P.Q. 2d 1538 (D.D.C. 2008). Patentees assert that pursuant to Wyeth, a PTO delay under 35 U.S.C. §154(b)(1)(A) overlaps with a delay under 35 U.S.C. §154(b)(1)(B) only if the delays "occur on the same day." Patentees maintain that 174 days overlap between the period of adjustment due to the Three Year Delay by the Office, pursuant to 37 CFR § 1.703(b), and the

period of adjustment due to examination delay, pursuant to 37 CFR § 1.702(a), as these periods occur on the same day. Thus, patentees request that the determination of patent term adjustment be increased from 830 days to 1294 days.

Patentees submit that the total period of adjustment for Office delay is the sum of the period of three-year delay (638 days) and the period of examination delay (843 days) to the extent these periods do not overlap. As such, patentees assert entitlement to a patent term adjustment of 1294 days (843 days *plus* 638 days less 174 days of overlap less 13 days of applicant delay).

The Office finds that as of the filing of the request for continued examination (RCE) on May 21, 2008, the application was pending three years and 638 days after its filing date. An entry of a period of adjustment of 843 days was entered for Office delay. Further, an undisputed reduction of 13 days for applicants' failure to engage in reasonable efforts to conclude prosecution was taken. At issue is whether patentees should accrue an additional 638 days of patent term adjustment for the Office taking in excess of three years to issue the patent as well as 843 days for Office failure to take a certain action within a specified time frame (or examination delay).

The Office contends that 638 days overlap. 35 U.S.C. 154(b)(2)(A) limits the adjustment of patent term, as follows:

> To the extent that the periods of delay attributable to grounds specified in paragraph (1) overlap, the period of any adjustment granted under this subsection shall not exceed the actual number of days the issuance of the patent was delayed.

Likewise, 37 CFR 1.703(f) provides that:

> To the extent that periods of delay attributable to the grounds specified in §1.702 overlap, the period of adjustment granted under this section shall not exceed the actual number of days the issuance of the patent was delayed.

As explained in *Explanation of 37 CFR 1.703(f) and of the United States Patent and Trademark Office Interpretation of 35 U.S.C.*

154(b)(2)(A), 69 Fed. Reg. 34283 (June 21, 2004), the Office interprets 35 U.S.C. 154(b)(2)(A) as permitting either patent term adjustment under 35 U.S.C. 154(b)(1)(A)(i)-(iv), or patent term adjustment under 35 U.S.C. 154(b)(1)(B), but not as permitting patent term adjustment under both 35 U.S.C. 154(b)(1)(A)(i)-(iv) and 154(b)(1)(B). Accordingly, the Office implements the overlap provision as follows:

> If an application is entitled to an adjustment under 35 U.S.C. 154(b)(1)(B), the entire period during which the application was pending (except for periods excluded under 35 U.S.C. 154(b)(1)(B)(i)-(iii)), and not just the period beginning three years after the actual filing date of the application, is the period of delay under 35 U.S.C. 154(b)(1)(B) in determining whether periods of delay overlap under 35 U.S.C. 154(b)(2)(A). Thus, any days of delay for Office issuance of the patent more than 3 years after the filing date of the application, which overlap with the days of patent term adjustment accorded prior to the issuance of the patent will not result in any additional patent term adjustment. See 35 U.S.C. 154(b)(1)(B), 35 U.S.C. 154(b)(2)(A), and 37 CFR § 1.703(f). See *Changes to Implement Patent Term Adjustment Under Twenty Year Term; Final Rule*, 65 Fed. Reg. 56366 (Sept. 18, 2000). See also *Revision of Patent Term Extension and Patent Term Adjustment Provisions; Final Rule*, 69 Fed. Reg. 21704 (April 22, 2004), 1282 Off. Gaz. Pat. Office 100 (May 18, 2004). See also *Explanation of 37 CFR 1.703(f) and of the United States Patent and Trademark Office Interpretation of 35 U.S.C. 154(b)(2)(A)*, 69 Fed. Reg. 34283 (June 21, 2004).

As such, the period for over 3 year pendency does not overlap only to the extent that the actual dates in the period beginning three years after the date on which the application was filed overlap with the actual dates in the periods for failure of the Office to take action within specified time frames.

In this instance, the relevant period under 35 U.S.C. 154(b)(1)(B) in determining whether periods of delay "overlap" under 35 U.S.C. 154(b)(2)(A) is the filing date August 22, 2003 until the filing of the RCE on May 21, 2008. Prior to the issuance of the patent, 843 days of patent term adjustment were

accorded for the Office failing to respond within a specified time frame during the pendency of the application.

The Office did not delay 843 days and then delay an additional 638 days. Accordingly, 843 days of patent term adjustment for Office delay (not 843 days and 638 days) was properly entered because the entire period of delay of 638 days attributable to the delay under 37 CFR 1.702(b) overlaps with the 843 days attributable to grounds specified in § 1.702(a)(1).

Accordingly, at issuance, the Office properly entered no additional days of patent term adjustment.

In view thereof, the Office affirms that the revised determination of patent term adjustment at the time of the issuance of the patent was 830 days (843-13).

The Office acknowledges submission of the $200.00 fee set forth in 37 CFR 1.18(e). No additional fees are required.

Telephone inquiries specific to this matter should be directed to Charlema Grant, Petitions Attorney, at (571) 272-3215.

Christina Tartera Donnell for

Kery Fries
Senior Legal Advisor Attorney
Office of Patent Legal Administration

UNITED STATES PATENT AND TRADEMARK OFFICE

Commissioner for Patents
United States Patent and Trademark Office
P.O. Box 1450
Alexandria, VA 22313-1450
www.uspto.gov

MAILED

APR 14 2010

OFFICE OF PETITIONS

ROTHWELL, FIGG, ERNST & MANBECK, P.C.
1425 K STREET, N.W.
SUITE 800
WASHINGTON DC 20005

In re Patent No. 7,539,530	:
Caplan et al.	: DECISION ON REQUEST FOR
Issue Date: May 26, 2009	: RECONSIDERATION OF
Application No. 10/646,271	: PATENT TERM ADJUSTMENT
Filed: August 22, 2003	: AND NOTICE OF INTENT
Attorney Docket No. 3619-305	: TO ISSUE CERTIFICATE OF
Title: METHOD AND SYSTEM FOR	: CORRECTION
SPECTRAL EXAMINATION OF	:
VASCULAR WALLS THROUGH BLOOD	:
DURING CARDIAC MOTION	:

This is a decision on the petition filed on November 10, 2009, which is being treated as a petition under 37 CFR 1.181 requesting that the patent term adjustment indicated on the above-identified patent be corrected to indicate that the term of the above-identified patent is extended or adjusted by one thousand two hundred ninety-four (1294) days. The petition was filed within two months of a decision by the Office mailed on September 15, 2009 dismissing applicants' request for reconsideration of PTA under 37 CFR 1.705(d).

The petition to correct the patent term adjustment indicated on the above-identified patent to indicate that the term of the above-identified patent is extended or adjusted by one thousand two hundred ninety-three (1293) days is **GRANTED to the extent indicated herein.**

As the period from the filing date of the request for continued examination (RCE) to the issue date of the patent is not included in the "B" delay period, the over three year period begins on August 23, 2006 and ends on May 20, 2008, the day before the RCE was filed, and is 637 days. See 35 U.S.C.

154(b)(1)(B)(i). The amount of overlap is 174 days. As such, the patent term adjustment is 1293, not 1294 days.

The Office will *sua sponte* issue a certificate of correction. Pursuant to 37 CFR 1.322, the Office will not issue a certificate of correction without first providing assignee or patentee an opportunity to be heard. Accordingly, patentees are given **one (1) month or thirty (30) days**, whichever is longer, from the mail date of this decision to respond. No extensions of time will be granted under § 1.136.

The application is being forwarded to the Certificates of Branch for issuance of a certificate of correction. The Office will issue a certificate of correction indicating that the term of the above-identified patent is extended or adjusted by **one thousand two hundred ninety-three (1293)** days.

Telephone inquiries specific to this matter should be directed to Petitions Attorney, Charlema Grant at (571) 272-3215.

Anthony Knight
Director
Office of Petitions

Enclosure: Copy of DRAFT Certificate of Correction

UNITED STATES PATENT AND TRADEMARK OFFICE

CERTIFICATE OF CORRECTION

PATENT : 7,539,530 B2

DATED : **May 26, 2009** **DRAFT**

INVENTOR(S) : Caplan et al.

It is certified that error appears in the above-identified patent and that said Letters Patent is hereby corrected as shown below:

On the cover page,

[*] Notice: Subject to any disclaimer, the term of this patent is extended or adjusted under 35 USC 154(b) by 830 days

Delete the phrase "by 830 days" and insert – by 1293 days--

UNITED STATES PATENT AND TRADEMARK OFFICE

Commissioner for Patents
United States Patent and Trademark Office
P.O. Box 1450
Alexandria, VA 22313-1450
www.uspto.gov

COPY MAILED

SEP 30 2008

OFFICE OF PETITIONS

CLARK & ELBING LLP
101 FEDERAL STREET
BOSTON MA 02110

In re Application of
Bjarne Due Larsen et al.
Application No. 10/646,294
Filed: August 22, 2003
Attorney Docket No. **50412/021002**

: DECISION ON PETITION
: UNDER 37 CFR 1.78(a)(3)

This is a decision on the petition filed March 7, 2008, to amend priority under 37 CFR 1.78(a)(3), as set forth in the concurrently filed amendment and Application Data Sheet (ADS).

The petition is **DISMISSED** as inappropriate.

The filing of a petition under 37 CFR 1.78(a)(3) is inappropriate to delete a benefit claim. In this regard, petitioner's attention is directed to MPEP § 201.11(G), under the subheading Deleting Benefit Claims, which states:

> The examiner should consider whether any new prior art may now be available if a benefit claim is deleted. If an applicant is submitting an amendment to the specification or an ADS to delete a benefit claim after final rejection or action, the amendment or ADS will be treated under 37 CFR 1.116 (see MPEP § 714.12 and § 714.13). If the amendment or ADS to delete a benefit claim is submitted after the application has been allowed, the amendment or ADS will be treated under 37 CFR 1.312 (see § MPEP 714.16).

In view of the above, no petition fees are due and none have been charged.

This matter is being referred to Technology Center AU 1654 for appropriate action on the amendment and ADS filed March 7, 2008, requesting deletion of the benefit claim.

Any inquiries concerning this decision may be directed to Senior Petitions Attorney Patricia Faison-Ball at (571) 272-3212. All other inquiries concerning either the examination procedures or status of the application should be directed to the Technology Center.

Anthony Knight
Supervisor
Office of Petitions

UNITED STATES PATENT AND TRADEMARK OFFICE

UNITED STATES DEPARTMENT OF COMMERCE
United States Patent and Trademark Office
Address: COMMISSIONER FOR PATENTS
P.O. Box 1450
Alexandria, Virginia 22313-1450
www.uspto.gov

CLARK & ELBING LLP
101 FEDERAL STREET
BOSTON, MA 02110

Mail Date: 04/20/2010

Applicant	: Bjarne Due Larsen	: DECISION ON REQUEST FOR
Patent Number	: 7585839	: RECALCULATION of PATENT
Issue Date	: 09/08/2009	: TERM ADJUSTMENT IN VIEW
Appliction No	: 10/646,294	: OF WYETH AND NOTICE OF INTENT TO
Filed	: 08/22/2003	: ISSUE CERTIFICATE OF CORRECTION
		:

The Request for Recalculation is **GRANTED** to the extent indicated.

The patent term adjustment has been determined to be **1104** days. The USPTO will *sua sponte* issue a certificate of correction reflecting the amount of PTA days determined by the recalculation.

Prior to the issuance of the certificate of correction, the USPTO will afford patentee an opportunity to be heard and request reconsideration. Accordingly, patentee has **one month or thirty (30) days**, whichever is longer, to file a request for reconsideration of this patent term adjustment calculation. See 35 U.S.C. 154(b)(3)(B)(ii) and 37 CFR 1.322(a)(4). No extensions of time will be granted under 37 CFR 1.136.

Patentee should use document code PET.OP if electronically filing a request for reconsideration of this patent term adjustment calculation. The patentee must also include the information required by 37 CFR 1.705(b)(2) and the fee required by 37 CFR 1.18(e). If patentee does not file a timely request for reconsideration of this patent term adjustment calculation including the information required by 37 CFR 1.705(b)(2) and the fee required by 37 CFR 1.18(e), the USPTO will issue a certificate of correction reflecting the PTA determination noted above.

Patentee should be aware that in order to preserve the right to review in the United States District Court for the District of Columbia of the USPTO patent term adjustment determination, patentee must ensure that he or she also take the steps required under 35 U.S.C. 154(b)(4)(A) in a timely manner. Nothing in the request for recalculation should be construed as providing an alternative time frame for commencing a civil action under 35 U.S.C. 154(b)(4)(A).

Any questions concerning this decision should be directed to the Office of Patent Legal Administration at 571-272-7702.

UNITED STATES PATENT AND TRADEMARK OFFICE

UNITED STATES DEPARTMENT OF COMMERCE
United States Patent and Trademark Office
Address: COMMISSIONER FOR PATENTS
P.O. Box 1450
Alexandria, Virginia 22313-1450
www.uspto.gov

CLARK & ELBING LLP
101 FEDERAL STREET
BOSTON, MA 02110

Mail Date: 05/17/2010

Applicant : Bjarne Due Larsen
Patent Number : 7585839
Issue Date : 09/08/2009
Application No: 10/646,294
Filed : 08/22/2003

: NOTICE CONCERNING IMPROPER
: CALCULATION OF PATENT TERM
: ADJUSTMENT BASED UPON USPTO
: IMPROPERLY MEASURING REDUCTION
: PERIOD UNDER 37 CFR 1.704(c)(10).

The United States Patent and Trademark Office (USPTO) discovered that in processing the recent recalculation decisions mailed in response to patentee's filed Request for Recalculation of Patent Term Adjustment in view of Wyeth, the USPTO improperly measured the reduction period for reductions under 37 CFR 1.704(c)(10). Pursuant to 37 CFR 1.704(c)(10), patentee's reduction begins on the date of filing the amendment under 37 CFR 1.312 ("1.312 amendment") or other related paper and ends on the date that the Office mails a response to the filing of the 1.312 amendment or other paper. It has been discovered that during the recalculation, the calculation failed to the limit the reduction to the mail date of the response to the 1.312 amendment or other paper. Accordingly, patentee's reductions were greater than warranted.

This notice **VACATES** the previous GRANTED request for recalculation and provides patentee with a revised GRANTED recalculation.

The patent term adjustment has been determined to be **1159** days. The USPTO will *sua sponte* issue a certificate of correction reflecting the amount of patent term adjustment (PTA) days determined by the recalculation.

Prior to the issuance of the certificate of correction, the USPTO will afford patentee an opportunity to be heard and request reconsideration. Accordingly, patentee has **one month or thirty (30) days** from the mail date of this notice, whichever is longer, to file a request for reconsideration of this PTA calculation. See 35 U.S.C. § 154(b)(3)(B)(ii) and 37 CFR 1.322(a)(4).

Patentee should use document code PET.OP if electronically filing a request for reconsideration of this PTA calculation. The patentee must also include the information required by 37 CFR 1.705(b)(2), and the fee required by 37 CFR 1.18(e). If patentee does not file a timely request for reconsideration of this PTA calculation, including the information required by 37 CFR 1.705(b)(2) and the fee required by 37 CFR 1.18(e), the USPTO will issue a certificate of correction reflecting the PTA determination noted above.

Patentee should be aware that in order to preserve the right of review of the USPTO's PTA determination in the United States District Court for the District of Columbia, patentee must ensure that the steps required under 35 U.S.C. § 154 (b)(4) are taken in a timely manner. Nothing in the request for recalculation should be construed as providing an alternative time frame for commencing a civil action under 35 U.S.C. § 154(b)(4).

UNITED STATES PATENT AND TRADEMARK OFFICE

UNITED STATES DEPARTMENT OF COMMERCE
United States Patent and Trademark Office
Address: COMMISSIONER FOR PATENTS
P.O. Box 1450
Alexandria, Virginia 22313-1450
www.uspto.gov

APPL NO.	FILING OR 371 (c) DATE	ART UNIT	FIL FEE REC'D	ATTY.DOCKET NO	DRAWINGS	TOT CLMS	IND CLMS
10/646,304	08/21/2003	3747	750	60680-1748	3	12	2

CONFIRMATION NO. 9211

CORRECTED FILING RECEIPT

OC000000011560042

10291
RADER, FISHMAN & GRAUER PLLC
39533 WOODWARD AVENUE
SUITE 140
BLOOMFIELD HILLS, MI 48304-0610

Date Mailed: 12/23/2003

Receipt is acknowledged of this regular Patent Application. It will be considered in its order and you will be notified as to the results of the examination. Be sure to provide the U.S. APPLICATION NUMBER, FILING DATE, NAME OF APPLICANT, and TITLE OF INVENTION when inquiring about this application. Fees transmitted by check or draft are subject to collection. Please verify the accuracy of the data presented on this receipt. **If an error is noted on this Filing Receipt, please write to the Office of Initial Patent Examination's Filing Receipt Corrections, facsimile number 703-746-9195. Please provide a copy of this Filing Receipt with the changes noted thereon. If you received a "Notice to File Missing Parts" for this application, please submit any corrections to this Filing Receipt with your reply to the Notice. When the USPTO processes the reply to the Notice, the USPTO will generate another Filing Receipt incorporating the requested corrections (if appropriate).**

Applicant(s)

Mark A. Leimer, Fort Wayne, IN;

Domestic Priority data as claimed by applicant

Foreign Applications

If Required, Foreign Filing License Granted: 11/13/2003

Projected Publication Date: Request for Non-Publication Acknowledged

Non-Publication Request: Yes

Early Publication Request: No

Title

Valve stem seal assembly with changeable cap

Preliminary Class

123

LICENSE FOR FOREIGN FILING UNDER
Title 35, United States Code, Section 184
Title 37, Code of Federal Regulations, 5.11 & 5.15

GRANTED

The applicant has been granted a license under 35 U.S.C. 184, if the phrase "IF REQUIRED, FOREIGN FILING LICENSE GRANTED" followed by a date appears on this form. Such licenses are issued in all applications where the conditions for issuance of a license have been met, regardless of whether or not a license may be required as set forth in 37 CFR 5.15. The scope and limitations of this license are set forth in 37 CFR 5.15(a) unless an earlier license has been issued under 37 CFR 5.15(b). The license is subject to revocation upon written notification. The date indicated is the effective date of the license, unless an earlier license of similar scope has been granted under 37 CFR 5.13 or 5.14.

This license is to be retained by the licensee and may be used at any time on or after the effective date thereof unless it is revoked. This license is automatically transferred to any related applications(s) filed under 37 CFR 1.53(d). This license is not retroactive.

The grant of a license does not in any way lessen the responsibility of a licensee for the security of the subject matter as imposed by any Government contract or the provisions of existing laws relating to espionage and the national security or the export of technical data. Licensees should apprise themselves of current regulations especially with respect to certain countries, of other agencies, particularly the Office of Defense Trade Controls, Department of State (with respect to Arms, Munitions and Implements of War (22 CFR 121-128)); the Office of Export Administration, Department of Commerce (15 CFR 370.10 (j)); the Office of Foreign Assets Control, Department of Treasury (31 CFR Parts 500+) and the Department of Energy.

NOT GRANTED

No license under 35 U.S.C. 184 has been granted at this time, if the phrase "IF REQUIRED, FOREIGN FILING LICENSE GRANTED" DOES NOT appear on this form. Applicant may still petition for a license under 37 CFR 5.12, if a license is desired before the expiration of 6 months from the filing date of the application. If 6 months has lapsed from the filing date of this application and the licensee has not received any indication of a secrecy order under 35 U.S.C. 181, the licensee may foreign file the application pursuant to 37 CFR 5.15(b).

UNITED STATES PATENT AND TRADEMARK OFFICE

Commissioner for Patents
United States Patent and Trademark Office
P.O. Box 1450
Alexandria, VA 22313-1450
www.uspto.gov

Fulbright and Jaworski LLP
Patent Docketing 29th Floor
865 South Figueroa Street
Los Angeles, CA 900172576

MAILED

DEC 15 2004

DIRECTOR'S OFFICE
TECHNOLOGY CENTER 3600

In re application of
Yuh-Shen Song et al
Application No. 10/646,314
Filed: August 21, 2003
For: ANTI-FRAUD DOCUMENT TRANSACTION SYSTEM

DECISION ON PETITION TO MAKE SPECIAL (ACCELERATED EXAMINATION)

This is in response to the petition filed on August 21, 2003 to make the above-identified application special on the basis of special examining procedure for certain new applications - accelerated examination as set forth in MPEP § 708.02 VIII.

The requirements for granting special status under this section are: (A) a petition to make special accompanied by the fee set forth in 37 CFR 1.17(i); (B) all claims being directed to a single invention, or an election without traverse if the Office determines that all the claims are not directed to a single invention; (C) a statement that a pre-examination search was made listing the field of search; (D) one copy of each of the references deemed most closely related to the subject matter encompassed by the claims if said references are not already of record; and (E) a detailed discussion of how the claimed subject matter is patentable over the references in accordance with 37 CFR 1.111 (b) and (c).

The petition filed December 16, 2003 fails to adequately meet requirements (C), (D) and (E) above. As to (E), a detailed discussion of how the claimed subject matter is patentable over the references has not been provided for the references of Exhibit B. There is no detailed discussion of what the references teach.

For the above stated reasons, the petition is DISMISSED.

Petitioner is given one more opportunity to perfect the petition. Any request for reconsideration must be filed within TWO MONTHS of the date of this decision. Extensions of time under 37 CFR 1.136(a) are permitted. Applicant should promptly submit a renewed petition to the Commissioner of Patents and Trademarks, Washington, D.C. 20231. The envelope should indicate that the correspondence be brought to the attention of Technology Center 3600.

SUMMARY: Petition to Make Special **DISMISSED**.

Until the renewed petition is submitted, the application will be returned to the examiner's docket to await treatment on the merits in the normal order of examination.

Kenneth J. Dorner
Special Programs Examiner
Technology Center 3600
(703) 308-0866

kjd:12/14/04

UNITED STATES PATENT AND TRADEMARK OFFICE

Commissioner for Patents
United States Patent and Trademark Office
P.O. Box 1450
Alexandria, VA 22313-1450
www.uspto.gov

PATENT ADMINISTRATION
INTELLECTUAL PROPERTY BUSINESS
15460 LAGUNA CANYON ROAD
MC 1650-7006

COPY MAILED

MAR 0 8 2006

OFFICE OF PETITIONS

In re Application of :
Randall R. Clark et al :
Application No. 10/646,316 : ON PETITION
Filed: August 22, 2003 :
Attorney Docket No. 091-0189 :

This is a decision on the petition, filed February 28, 2006, under 37 CFR 1.313(c)(2) to withdraw the above-identified application from issue after payment of the issue fee.

The petition is **GRANTED**.

The above-identified application is withdrawn from issue for consideration of a submission under 37 CFR 1.114 (request for continued examination). See 37 CFR 1.313(c)(2).

Petitioner is advised that the issue fee paid on January 20, 2006, in the above-identified application cannot be refunded. If, however, the above-identified application is again allowed, petitioner may request that it be applied towards the issue fee required by the new Notice of Allowance.[1]

The file does not indicate a change of address has been submitted, although the address given on the petition differs from the address of record. If appropriate, a change of address should be filed in accordance with MPEP 601.03. A courtesy copy of this decision is being mailed to the address given on the petition; however, the Office will mail all future correspondence solely to the address of record.

Telephone inquiries should be directed to the undersigned at (571) 272-3208.

---

[1] The request to apply the issue fee to the new Notice may be satisfied by completing and returning the new Issue Fee Transmittal Form PTOL-85(b), which includes the following language thereon: "Commissioner for Patents is requested to apply the Issue Fee and Publication Fee (if any) or re-apply any previously paid issue fee to the application identified above." Petitioner is advised that, whether a fee is indicated as being due or not, the Issue Fee Transmittal Form **must** be completed and timely submitted to avoid abandonment. Note the language in bold text on the first page of the Notice of Allowance and Fee(s) Due (PTOL-85).

The examiner of Technology Center AU 1733 will consider the request for continued examination under 37 CFR 1.114.

Karen Creasy

Karen Creasy
Petitions Examiner
Office of Petitions
Office of the Deputy Commissioner
for Patent Examination Policy

cc:
SHIMOKAJI & ASSOCIATES, P.C.
8911 RESEARCH DRIVE
IRVINE, CA 92618

UNITED STATES PATENT AND TRADEMARK OFFICE

Commissioner for Patents
United States Patent and Trademark Office
P.O. Box 1450
Alexandria, VA 22313-1450
www.uspto.gov

PATENT ADMINISTRATION
INTELLECTUAL PROPERTY BUSINESS
15460 LAGUNA CANYON ROAD
MC 1650-7006

COPY MAILED

MAR 0 8 2006

OFFICE OF PETITIONS

In re Application of	:	
Randall R. Clark et al	:	
Application No. 10/646,316	:	ON PETITION
Filed: August 22, 2003	:	
Attorney Docket No. 091-0189	:	

This is a decision on the petition, filed February 28, 2006, under 37 CFR 1.313(c)(2) to withdraw the above-identified application from issue after payment of the issue fee.

The petition is **GRANTED.**

The above-identified application is withdrawn from issue for consideration of a submission under 37 CFR 1.114 (request for continued examination). See 37 CFR 1.313(c)(2).

Petitioner is advised that the issue fee paid on January 20, 2006, in the above-identified application cannot be refunded. If, however, the above-identified application is again allowed, petitioner may request that it be applied towards the issue fee required by the new Notice of Allowance.[1]

The file does not indicate a change of address has been submitted, although the address given on the petition differs from the address of record. If appropriate, a change of address should be filed in accordance with MPEP 601.03. A courtesy copy of this decision is being mailed to the address given on the petition; however, the Office will mail all future correspondence solely to the address of record.

Telephone inquiries should be directed to the undersigned at (571) 272-3208.

---

[1] The request to apply the issue fee to the new Notice may be satisfied by completing and returning the new Issue Fee Transmittal Form PTOL-85(b), which includes the following language thereon: "Commissioner for Patents is requested to apply the Issue Fee and Publication Fee (if any) or re-apply any previously paid issue fee to the application identified above." Petitioner is advised that, whether a fee is indicated as being due or not, the Issue Fee Transmittal Form **must** be completed and timely submitted to avoid abandonment. Note the language in bold text on the first page of the Notice of Allowance and Fee(s) Due (PTOL-85).

The examiner of Technology Center AU 1733 will consider the request for continued examination under 37 CFR 1.114.

Karen Creasy
Petitions Examiner
Office of Petitions
Office of the Deputy Commissioner
for Patent Examination Policy

cc:
SHIMOKAJI & ASSOCIATES, P.C.
8911 RESEARCH DRIVE
IRVINE, CA 92618

UNITED STATES PATENT AND TRADEMARK OFFICE

COMMISSIONER FOR PATENTS
UNITED STATES PATENT AND TRADEMARK OFFICE
P.O. BOX 1450
ALEXANDRIA, VA 22313-1450
www.uspto.gov

COPY MAILED

AUG 11 2005

OFFICE OF PETITIONS

MCANDREWS HELD & MALLOY, LTD
500 WEST MADISON STREET
SUITE 3400
CHICAGO, IL 60661

In re Application of : DECISION REFUSING STATUS
Mahany, et al. : UNDER 37 CFR 1.47(a)
Application No. 10/646,318 : AND DISMISSING PETITION
Filed: August 22, 2003 : UNDER 37 CFR 1.48
Atty. Dkt. 14366US02 :

This decision is in response to the petition under 37 CFR 1.48 and the petition under 37 CFR 1.47(a), filed April 25, 2005.

DECISION UNDER 37 CFR 1.47(a)

Petitioners herein seek to amend the above-identified application to include Keith Cargin, however, petitioners' allege that Cargin has refused to sign an oath.

A grantable petition under 37 CFR 1.47(a) requires: (1) proof that the non-signing inventor cannot be reached or refuses to sign the oath or declaration after having been presented with the application papers (specification, claims and drawings); (2) an acceptable oath or declaration in compliance with 35 U.S.C. §§ 115 and 116; (3) the petition fee; and (4) a statement of the last known address of the non-signing inventor.

The instant petition fails to satisfy requirement (2). The declaration submitted herein is not acceptable because it fails to set forth the residence and mailing address of the non-signing inventor. There is no indication in the application file that this information has been provided by way of an application data sheet in accordance with 37 CFR 1.76. Moreover, the pages of the declaration are not properly numbers; i.e., page 1 of 3, etcetera. Thus, any renewed petition under 37 CFR 1.47 must be accompanied by a newly executed oath or declaration in compliance with 37 CFR 1.63 or an application data sheet in compliance with 37 CFR 1.76.

For the reasons set forth herein, the petition under 37 CFR 1.48 is **DISMISSED**.

DECISION UNDER 37 CFR 1.48(a)

Petitioners herein request correction of the inventorship of the instant application.

Correction of inventorship pursuant to 37 CFR 1.48(a) requires: (1) a request to correct the inventorship that sets forth the desired inventorship change; (2) a statement from each person being added as an inventor and from each person being deleted as an inventor that the error in inventorship occurred without deceptive intention on his or her part; (3) an oath or declaration by the actual inventor or inventors as required by 37 CFR 1.63 or as permitted by 37 CFR §§ 1.42, 1.43 or 1.47; (4) the processing fee set forth in 37 CFR 1.17(i); and (5) if an assignment has been executed by any of the original inventors, the written consent of the assignee.

The instant petition fails to satisfy requires (2) and (3) set forth above.

As to item (2), the requirement for a statement from the person being added has not been satisfied as the instant application has not satisfied the requirements of either 37 CFR 1.48(a)(2) or 37 CFR 1.47. Accordingly, any renewed petition under 37 CFR 1.48 must be accompanied by the required statement of a grantable petition under 37 CFR 1.47.

As to item (3), a new oath or declaration is required to be submitted in accordance with the requirements of 37 CFR 1.63. For the reasons set forth above, the declaration submitted herewith is not acceptable. Accordingly, any renewed petition under 37 CFR 1.48 must be accompanied by a newly executed oath or declaration.

For the reasons set forth herein, the petition under 37 CFR 1.48(a) is **DISMISSED**.

Petitioner is given **TWO (2) MONTHS** from the mailing date of this decision to reply, correcting the below-noted deficiencies. Any reply should be entitled "Renewed Petition," and should only address the deficiencies noted below, except that the reply may include an oath or declaration executed by the non-signing inventor(s). Failure to respond will result in abandonment of the application. Any extensions of time will be governed by 37 CFR 1.136(a).

The required petition fee under 37 CFR 1.47 is currently $200.00. Thus, the remaining $70.00 has been charged to Deposit Account No. 13-0017.

Further correspondence with respect to this matter should be addressed as follows:

By mail:	**Mail Stop Petition** Commissioner for Patents P.O. Box 1450 Alexandria, VA 22313-1450
By facsimile:	(571) 272-8300
By hand:	U.S. Patent and Trademark Office Customer Service Window Mail Stop Petition Randolph Building 401 Dulany Street Alexandria, VA 22314

Telephone inquiries regarding this decision should be directed to the undersigned at (703) 305-0310.

Alesia M. Brown
Petitions Attorney
Office of Petitions

UNITED STATES PATENT AND TRADEMARK OFFICE

COMMISSIONER FOR PATENTS
UNITED STATES PATENT AND TRADEMARK OFFICE
P.O. BOX 1450
ALEXANDRIA, VA 22313-1450
www.uspto.gov

MCANDREWS HELD & MALLOY, LTD
500 WEST MADISON STREET
SUITE 3400
CHICAGO, IL 60661

COPY MAILED

SEP 26 2005

OFFICE OF PETITIONS

In re Application of : DECISION REFUSING STATUS
Mahany, et al. : UNDER 37 CFR 1.47(a)
Application No. 10/646,318 : AND DISMISSING PETITION
Filed: August 22, 2003 : UNDER 37 CFR 1.48
Atty. Dkt. 14366US02 :

This decision is in response to the renewed petitions under 37 CFR 1.48 and 37 CFR 1.47(a), filed August 11, 2005.

DECISION UNDER 37 CFR 1.47(a)

Petitioners herein seek to amend the above-identified application to include Keith Cargin, however, petitioners' allege that Cargin has refused to sign an oath.

A grantable petition under 37 CFR 1.47(a) requires: (1) proof that the non-signing inventor cannot be reached or refuses to sign the oath or declaration after having been presented with the application papers (specification, claims and drawings); (2) an acceptable oath or declaration in compliance with 35 U.S.C. §§ 115 and 116; (3) the petition fee; and (4) a statement of the last known address of the non-signing inventor.

Decision under 37 CFR 1.47 is hereby HELD IN ABEYANCE until such time as the requirements of 37 CFR 1.48 are satisfied.

DECISION UNDER 37 CFR 1.48(a)

Petitioners herein request correction of the inventorship of the instant application.

Correction of inventorship pursuant to 37 CFR 1.48(a) requires: (1) a request to correct the inventorship that sets forth the desired inventorship change; (2) a statement from each person being added as an inventor and from each person being deleted as an inventor that the error in inventorship occurred without deceptive intention on his or her part; (3) an oath or declaration by the actual inventor or inventors as required by 37 CFR 1.63 or as permitted by 37 CFR §§ 1.42, 1.43 or 1.47; (4)

the processing fee set forth in 37 CFR 1.17(i); and (5) if an assignment has been executed by any of the original inventors, the written consent of the assignee.

The instant petition fails to satisfy requires (2) and (3) set forth above.

As to item (2), the requirement for a statement from the person being added has not been satisfied. Accordingly, any renewed petition under 37 CFR 1.48 must be accompanied by the required statement or petition for waiver of the required statement under 37 CFR 1.183.

As to item (3), a fully executed oath or declaration has not been submitted. In order to satisfy the oath or declaration of 37 CFR 1.63, petitioners are required to present a fully executed oath or declaration or a grantable petition under 37 CFR 1.47.

For the reasons set forth herein, the petition under 37 CFR 1.48(a) is **DISMISSED**.

Petitioner is given **TWO (2) MONTHS** from the mailing date of this decision to reply, correcting the below-noted deficiencies. Any reply should be entitled "Renewed Petition," and should only address the deficiencies noted below, except that the reply may include an oath or declaration executed by the non-signing inventor(s). Failure to respond will result in abandonment of the application. Any extensions of time will be governed by 37 CFR 1.136(a).

Further correspondence with respect to this matter should be addressed as follows:

By mail:
Mail Stop Petition
Commissioner for Patents
P.O. Box 1450
Alexandria, VA 22313-1450

By facsimile:
(571) 273-8300

By hand:
U.S. Patent and Trademark Office
Customer Service Window
Mail Stop Petition
Randolph Building
401 Dulany Street
Alexandria, VA 22314

Telephone inquiries regarding this decision should be directed to the undersigned at (571) 272-3205.

Alesia M. Brown
Petitions Attorney
Office of Petitions

UNITED STATES PATENT AND TRADEMARK OFFICE

COMMISSIONER FOR PATENTS
UNITED STATES PATENT AND TRADEMARK OFFICE
P.O. BOX 1450
ALEXANDRIA, VA 22313-1450
www.uspto.gov

MCANDREWS HELD & MALLOY, LTD
500 WEST MADISON STREET
SUITE 3400
CHICAGO, IL 60661

COPY MAILED

AUG 14 2006

OFFICE OF PETITIONS

In re Application of	: DECISION GRANTING
Mahany, et al.	: PETITIONS UNDER 37 CFR
Application No. 10/646,318	: 1.183, 37 CFR 1.48, and
Filed: August 22, 2003	: 1.47(a)
Atty. Dkt. 14366US02	:

This decision is in response to the renewed petitions under 37 CFR 1.183 to waive the requirements of 37 CFR 1.48(a)(3), 37 CFR 1.48, and 37 CFR 1.47, filed November 28, 2005.

The above-identified application was filed August 22, 2003 with an executed declaration naming Ronald Mahany (now deceased) and Stephen Kelly as joint inventors. Petitioners herein seek to correct the inventive entity of this application by adding Keith Cargin as a joint inventor.

DECISION UNDER 37 CFR 1.183

The provisions of 37 CFR 1.183 provide that "[i]n an extraordinary situation, when justice requires, any requirement of the regulations in this part which is not a requirement of the statutes may be suspended or waived by the Commissioner or the Commissioner's designee, *sua sponte*, or on petition of the interested party, subject to such other requirements as may be imposed."

Petitioners seek to correct the inventive entity in the instant application by submitting a petition under 37 CFR 1.48. Petitioners are required under 37 CFR 1.48(a)(3) to submit an oath or declaration by the actual inventor or inventors as required by §1.63 or as permitted by §§ 1.42, 1.43 or § 1.47. Petitioners are unable to comply with this requirement because newly added inventor Keith Cargin has either refused to sign the supplemental declaration or cannot be reach or located to sign the supplemental declaration.

Petitioners have established that they are unable to procure a statement from inventor Keith Cargin, the person being added as an

inventor, the error in inventorship having occurred without deceptive intention on his part.

Accordingly, the petition under 37 CFR 1.183 to waive the requirements of 37 CFR 1.48(a)(2) is hereby **GRANTED**.

DECISION UNDER 37 CFR 1.48

In view of the evidence presented, it has been found that this nonprovisional application, as filed, through error and without deceptive intent, improperly set forth the inventorship, and accordingly, this application has been corrected in compliance with 37 CFR 1.48, adding Keith Cargin as a joint inventor.

Accordingly, the petition under 37 CFR 1.48 is hereby **GRANTED**.

This application is being forwarded to Office of Initial Patent Examination for correction of PTO PALM data to reflect the inventorship as corrected and issuance of a corrected filing receipt.

Telephone inquiries regarding this decision should be directed to the undersigned at (571) 272-3205.

Alesia M. Brown
Petitions Attorney
Office of Petitions

UNITED STATES PATENT AND TRADEMARK OFFICE

Commissioner for Patents
United States Patent and Trademark Office
P.O. Box 1450
Alexandria, VA 22313-1450
www.uspto.gov

MCANDREWS HELD & MALLOY, LTD
500 WEST MADISON STREET, SUITE 3400
CHICAGO IL 60661

COPY MAILED

APR 20 2007

OFFICE OF PETITIONS

In re Application of
Ronald L. **MAHANY**, et al.
Application No. 10/646,318
Filed: August 22, 2003
Attorney Docket No. 14366US02

DECISION ON PETITION

This is a decision on the petition under 37 CFR 1.137(b), filed October 24, 2006, to revive the above-identified application.

There is no indication that the person signing the instant petition was ever given a power of attorney or authorization of agent to prosecute the above-identified application. However, the signature of Michael T. Cruz appearing on the petition shall constitute a representation to the United States Patent and Trademark Office that he is authorized to represent the particular party on whose behalf he acts in accordance with 37 CFR 1.34(a).

The petition is **GRANTED**.

The application became abandoned for failure to reply in a timely manner to the non-final Office action mailed, August 15, 2005, which set a shortened statutory period for reply of three (3) months. No extensions of time under the provisions of 37 CFR 1.136(a) were obtained. Accordingly, the application became abandoned on November 16, 2005.

The petition satisfies the requirements of 37 CFR 1.137(b) in that petitioner has supplied (1) the reply in the form of an amendment; (2) the petition fee of $1500; and (3) the required statement of unintentional delay[1].

[1] 37 CFR 1.137(b)(3) requires a statement that the entire delay in filing the required reply from the due date for the reply until the filing of a grantable petition pursuant to 37 CFR 1.137(b) was unintentional. While the statement is not made by an attorney of record, such statement is being treated as having been made as the result of a reasonable inquiry into the facts and circumstances of such delay. See 37 CFR 10.18(b) and Changes to Patent Practice and Procedure; Final Rule Notice, 62 Fed. Reg. 53131, 53178 (October 10, 1997), 1203 Off. Gaz. Pat. Office 63, 103 (October 21, 1997). In the event that such an inquiry has not been made, petitioner must make such an inquiry. If such inquiry results in the discovery that it is not correct that the entire delay in filing the required reply from the due date for the reply until the filing of a grantable petition pursuant to 37 CFR 1.137(b) was unintentional, petitioner must notify the Office.

Telephone inquiries concerning this decision should be directed to Monica A. Graves at (571) 272-7253.

The application file is being forwarded to Technology Center Art Unit 2876 for action on the merits commensurate with this decision.

Sherry D. Brinkley
Petitions Examiner
Office of Petitions

UNITED STATES PATENT AND TRADEMARK OFFICE

COMMISSIONER FOR PATENTS
UNITED STATES PATENT AND TRADEMARK OFFICE
P.O. BOX 1450
ALEXANDRIA, VA 22313-1450
www.uspto.gov

DEMONT & BREYER, LLC
100 COMMONS WAY
HOLMDEL, NJ 07733

COPY MAILED

MAR 2 8 2007

OFFICE OF PETITIONS

In re Application of :
Sepandar D. Kamvar, et al. :
Application No. 10/646,331 : ON PETITION
Filed: August 22, 2003 :
Attorney Docket No. 146-010US :

This is a decision on the petition under 37 CFR 1.137(b) to revive the above-identified application, filed November 27, 2006.

The petition is **GRANTED**.

The application became abandoned for failure to pay the issue fee on or before February 17, 2006. A Notice of Abandonment was mailed on May 11, 2006. In response, on November 27, 2006, the present petition was filed.

The petition satisfies the requirements of 37 CFR 1.137(b) in that petitioner has supplied (1) the reply in the form of the $1,400 issue fee and the $300 publication fee; (2) the petition fee of $1,500; and (3) the required statement of unintentional delay.

The application is being referred to the Office of Publications to be processed into a patent.

Telephone inquires related to this decision should be directed to the undersigned at (571) 272-3204. Telephone inquiries related to processing at Publishing Division should be directed to (571) 272-4200.

Sherry D. Brinkley
Petitions Examiner
Office of Petitions

UNITED STATES PATENT AND TRADEMARK OFFICE

Commissioner for Patents
United States Patent and Trademark Office
P.O. Box 1450
Alexandria, VA 22313-1450
www.uspto.gov

BROMBERG & SUNSTEIN LLP
125 SUMMER STREET
BOSTON, MA 02110-1618

COPY MAILED

DEC 16 2004

OFFICE OF PETITIONS

In re Application of	:	
Geen, John A.	:	
Application No. 10/646,332	:	DECISION GRANTING PETITION
Filed: August 22, 2003	:	UNDER 37 CFR 1.78(a)(6)
Attorney Docket No. 2550/189	:	

This is a decision on the petition under 37 CFR 1.78(a)(6), filed August 23, 2004, to accept an unintentionally delayed claim under 35 U.S.C. §119(e) for the benefit of the prior-filed provisional applications.

The petition is **GRANTED**.

A petition under 37 CFR 1.78(a)(6) is only applicable to those applications filed on or after November 29, 2000. Further, the petition is appropriate only after expiration of the period specified in 37 CFR 1.78(a)(5)(ii) and must be filed during the pendency of the nonprovisional application. In addition, the petition must be accompanied by:

(1) the reference required by 35 U.S.C. § 119(e) and 37 CFR 1.78(a)(5)(i) to the prior-filed application, unless previously submitted;
(2) the surcharge set forth in § 1.17(t); and
(3) a statement that the entire delay between the date the claim was due under 37 CFR 1.78(a)(5)(ii) and the date the claim was filed was unintentional. The Commissioner may require additional information where there is a question whether the delay was unintentional.

The intermediate nonprovisional application was filed on February 6, 2003, within twelve months of the filing date of the prior-filed provisional applications, Application Nos. 60/354,610 and 60/364,322, which were filed on February 6, 2002 and March 14, 2002, respectively, for which priority is claimed. A reference to the prior-filed provisional applications has been included in an amendment to the first sentence of the specification following the title.

The instant nonprovisional application was filed after November 29, 2000, and the claim for priority herein is submitted after expiration of the period specified in 37 CFR 1.78(a)(5)(ii). Also, the reference to the prior-filed provisional applications was submitted during the pendency of the nonprovisional application for which the benefit is sought. *See* 35 U.S.C. §119(e). Accordingly, having found that the instant petition satisfies the conditions of 37 CFR 1.78(a)(6) for acceptance of an unintentionally delayed claim for priority under 35 U.S.C. §119(e), the petition to accept an unintentionally delayed claim of benefit to prior-filed provisional Application Nos. 60/354,610 and 60/364,322 is granted.

The granting of the petition to accept the delayed benefit claim to the prior-filed applications under 37 CFR 1.78(a)(6) should not be construed as meaning that the instant application is entitled to the benefit of the filing date of the prior-filed applications. In order for the instant application to be entitled to the benefit of the prior-filed applications, all other requirements under 35 U.S.C. §119(e) and 37 CFR 1.78(a)(4) and (a)(5) must be met. Similarly, the fact that the corrected Filing Receipt accompanying this decision on petition includes the prior-filed applications should not be construed as meaning that applicant is entitled to the claim for benefit of priority to the prior-filed applications noted thereon. Accordingly, the examiner will, in due course, consider this benefit claim and determine whether the instant application is entitled to the benefit of the earlier filing date.

A corrected Filing Receipt, which includes the priority claim to the above-noted, prior-filed provisional applications, accompanies this decision on petition.

Further, a reference to add the above-noted, prior-filed provisional application on page one following the first sentence of the specification has been included in an amendment filed on August 23, 2004. However, the amendment is not acceptable as drafted since it improperly incorporates by reference the prior application. Petitioner's attention is directed to Dart Industries v. Banner, 636 F.2d 684, 207 USPQ 273 (C.A.D.C. 1980), where the court drew a distinction between a permissible 35 U.S.C. § 120 statement and the impermissible introduction of new matter by way of incorporation by reference in a 35 U.S.C. § 120 statement. Therefore, the incorporation herein by reference statement included in the amendment filed with the instant petition is not proper, since at the time of filing the instant application, the correct provisional application number was not included. However, the Office will accept the priority claim as shown in the application data sheet filed on August 23, 2004.

Accordingly, petitioner is advised to submit a substitute amendment deleting the incorporation by reference statement to provisional Application Nos. 60/354,610 and 60/364,322, filed on February 6, 2002 and March 14, 2002, respectively.

Any inquiries concerning this decision may be directed to Paralegal Liana Chase at (571) 272-3206.

This matter is being referred to the Office of Initial Patent Examination for pre-exam processing. Afterwards, this matter will be referred to Technology Center AU 3682 for examination and consideration by the examiner of the claim under 35 U.S.C. §119(e) for the benefit of priority to prior-filed provisional applications.

Frances Hicks

Frances Hicks
Petitions Examiner
Office of Petitions
Office of the Deputy Commissioner
for Patent Examination Policy

ATTACHMENT: Corrected Filing Receipt

UNITED STATES PATENT AND TRADEMARK OFFICE

Commissioner for Patents
United States Patent and Trademark Office
P.O. Box 1450
Alexandria, VA 22313-1450
www.uspto.gov

MONIQUE SHONKA
SCHWEGMAN, LUNDBERG & WOESSNER, P.A.
P.O. BOX 2938
MINNEAPOLIS, MN 55402

COPY MAILED

MAY 19 2009

OFFICE OF PETITIONS

In re Application of	:	
Kathryn E. Uhrich	:	DECISION ON PETITION
Application No. 10/646,336	:	TO WITHDRAW
Filed: August 22, 2003	:	FROM RECORD
Attorney Docket No. 01435.021US2	:	

This is a decision on the Request to Withdraw as attorney or agent of record under 37 C.F.R. § 1.36(b), filed March 24, 2006.

The request is **NOT APPROVED** because it is moot.

A review of the file record indicates that on May 1, 2006 the power of attorney to Schwegman, Lundberg & Woessner, P.A. was revoked by the assignee of the patent application. Accordingly, the request to withdraw under 37 C.F.R. § 1.36(b) is moot.

All future communications from the Office will be directed to the below-listed address until otherwise notified by applicant.

Telephone inquires concerning this decision should be directed to the undersigned at 571-272- 7751. All other inquires concerning either the examination or status of the application should be directed to the Technology Center.

Joan Olszewski

Joan Olszewski
Petitions Examiner
Office of Petitions

cc: Viksnins Harris & Padys PLLP
P.O. Box 111098
St. Paul MN 55111-1098

JUN 16 2004
PATENT & TRADEMARK OFFICE
TC 1700

IFW/#

FILE COPY

IN THE UNITED STATES PATENT & TRADEMARK OFFICE

APPLICANT: R. BRUCE DeMENT, ET AL.

TITLE: Nozzle for Use in Rotational Casting Apparatus

SERIAL NO.: 10/646,343

FILING DATE: August 22, 2003

GROUP: ART UNIT 1722

EXAMINER:

PETITION GRANTED

William Krynski
Special Program Examiner
TC 1700

FEB 18 2005

To: The Commissioner of Patents
P.O. Box 1450
Alexandria, VA 22313-1450

PETITION TO MAKE SPECIAL

Sir:

Applicants hereby petition that the above-identified application be made special under the provisions for accelerated examination as set forth in the Manual of Patent Examining Procedure, Section 708.02-VIII.

A pre-examination search was made by professional searcher, and developed references previously submitted as part of an Information Disclosure Statements.

The field of the search included: Class 239, Subclasses 589, as well as the searching the USPTO computer database.

None of the patents cited in the above-mentioned Information Disclosure Statements, whether taken singly or in combination, anticipates or makes obvious the claims of the present application as set forth in the pending claims, since none of the prior art cited in the Information Disclosure Statements discloses an nozzle having a

06/16/2004 HTECKLU1 00000094 10646343
01 FC:1460 130.00 OP

UNITED STATES PATENT AND TRADEMARK OFFICE

Commissioner for Patents
United States Patent and Trademark Office
P. O. Box 1450
Alexandria, VA 22313-1450
www. uspto. gov

CALFEE HALTER & GRISWOLD, LLP
800 SUPERIOR AVENUE
SUITE 1400
CLEVELAND, OH 44114

COPY MAILED

NOV 1 5 2005

OFFICE OF PETITIONS

In re Application of :
Andrew Marsh et al :
Application No. 10/646,349 : ON PETITION
Filed: August 22, 2003 :
Attorney Docket No. 28679 / 05675

This is a decision on the petition, filed November 14, 2005 under 37 CFR 1.313(c)(2) to withdraw the above-identified application from issue after payment of the issue fee.

The petition is **GRANTED**.

The above-identified application is withdrawn from issue for consideration of a submission under 37 CFR 1.114 (request for continued examination). See 37 CFR 1.313(c)(2).

Petitioner is advised that the issue fee paid on September 2, 2005 in the above-identified application cannot be refunded. If, however, the above-identified application is again allowed, petitioner may request that it be applied towards the issue fee required by the new Notice of Allowance.[1]

Telephone inquiries should be directed to Irvin Dingle at (571) 272-3210.

This matter is being referred to Technology Center AU 3683 for processing of the request for continued examination under 37 CFR 1.114 and for consideration of the concurrently filed Information Disclosure Statement.

Irvin Dingle
Petitions Examiner
Office of Petitions

[1] The request to apply the issue fee to the new Notice may be satisfied by completing and returning the new Issue Fee Transmittal Form PTOL-85(b), which includes the following language thereon: Commissioner for Patents is requested to apply the Issue Fee and Publication Fee (if any) or re-apply any previously paid issue fee to the application identified above. Petitioner is advised that, whether a fee is indicated as being due or not, the Issue Fee Transmittal Form **must** be completed and timely submitted to avoid abandonment. Note the language in bold text on the first page of the Notice of Allowance and Fee(s) Due (PTOL-85).

UNITED STATES PATENT AND TRADEMARK OFFICE

Commissioner for Patents
United States Patent and Trademark Office
P. O. Box 1450
Alexandria, VA 22313-1450
www. uspto. gov

TESTA HURWITZ & THIBEAULT LLP
HIGH STREET TOWER
125 HIGH STREET
BOSTON, MA 02110

COPY MAILED

DEC 15 2004

OFFICE OF PETITIONS

In re Application of	:	
Richard Westhoff et al	:	
Application No. 10/646,353	:	ON PETITION
Filed: August 22, 2003	:	
Attorney Docket No. ASC-058B	:	

This is a decision on the petition under 37 CFR 1.182, filed October 21, 2004, to change the order of inventorship.

The petition is **granted.**

Telephone inquiries concerning this matter may be directed to Irvin Dingle at (571) 272-3210.

Irvin Dingle
Petitions Examiner
Office of Petitions
Office of the Deputy Commissioner
for Patent Examination Policy

Attachment: Corrected Filing Receipt

UNITED STATES PATENT AND TRADEMARK OFFICE

Commissioner for Patents
United States Patent and Trademark Office
P.O. Box 1450
Alexandria, VA 22313-1450
www.uspto.gov

Richard John Bartz
Southdale Office Centre
Suite 350
6750 France Avenue South
Edina MN 55435

COPY MAILED

AUG 29 2007

OFFICE OF PETITIONS

In re Application of :
Craig N. Hansen et al :
Application No. 10/646,357 : DECISION ON PETITION
Filed: August 22, 2003 :
Attorney Docket No. E100.12.12 :

This is a decision on the petition under 37 CFR 1.137(b), filed April 23, 2007, to revive the above-identified application.

The petition is **GRANTED**.

This application became abandoned for failure to timely pay the issue fee on or before April 17, 2007, as required by the Notice of Allowance and Fee(s) Due, mailed January 17, 2007. Accordingly, the date of abandonment of this application is April 18, 2007. A Notice of Abandonment was mailed on May 3, 2007, subsequent to the filing of the present petition to revive.

The petition satisfies the requirements of 37 CFR 1.137(b) in that petitioner has supplied (1) the reply in the form of payment of the issue fee of $700, (2) the petition fee of $750, and (3) a proper statement of unintentional delay. Accordingly, the issue fee is accepted as having been unintentionally delayed.

Telephone inquiries concerning this decision should be directed to the undersigned at (571) 272-3218.

This application is being referred to Publishing Division for appropriate processing in accordance with this decision on petition.

Frances Hicks
Petitions Examiner
Office of Petitions

UNITED STATES PATENT AND TRADEMARK OFFICE

COMMISSIONER FOR PATENTS
UNITED STATES PATENT AND TRADEMARK OFFICE
P.O. BOX 1450
ALEXANDRIA, VA 22313-1450
www.uspto.gov

LERNER, DAVID, LITTENBERG,
KRUMHOLZ & MENTLIK
600 SOUTH AVENUE WEST
WESTFIELD, NJ 07090

COPY MAILED

JUL 17 2007

OFFICE OF PETITIONS

In re Application of
Xian-Ming Zeng
Application No. 10/646,361
Filed: August 21, 2003
Attorney Docket No. TEVNHC 3.0-587

DECISION ON PETITION
UNDER 37 CFR 1.55(c)

This is a decision on the petition under 37 CFR 1.55(c), filed June 28, 2007, to accept an unintentionally delayed claim under 35 U.S.C. § 119(a)-(d) for benefit of priority to the filing date of a foreign United Kingdom application; namely, Application No. 0219514.7.

The petition is **DISMISSED**.

This application was filed after November 29, 2000, and did not include a reference to the foreign application, for which benefit is now sought, within the later of four months from the actual filing date of the application or sixteen months from the filing date of the prior foreign application. Since the claim for priority is submitted after the period specified in 37 CFR 1.55(a)(1)(i), this is an appropriate petition under the provisions of 37 CFR 1.55(c).

A petition under 37 CFR 1.55(c) to accept an unintentionally delayed claim for priority requires:

(1) The nonprovisional application claiming the benefit of an earlier filing date must be filed on or after November 29, 2000;
(2) the claim submitted with the petition must identify the prior foreign application for which priority is claimed, as well as any foreign application for the same subject matter and having a filing date before that of the application for which priority is claimed, by the application number, country, and the filing date, **and be included either in an oath or declaration (37 CFR 1.63(c)(2)) or in an Application Data Sheet (37 CFR 1.76(b)(6))**;
(3) the surcharge as set forth in 37 CFR 1.17(t);
(4) a statement that the entire delay between the date the claim was due under 37 CFR 1.55(a)(1) and the date the claim was filed was unintentional (the Director may require additional information where there is a question whether the delay was unintentional); and
(5) the above-identified nonprovisional application must be filed within 12 months of the filing date of the foreign application.

The petition fails to comply with item (2) above. In this regard, a review of the file record fails to disclose that the priority information was included in an oath or declaration or in an Application Data Sheet (ADS) in accordance with 37 CFR 1.76(b)(6). Unless provided in an ADS, 37 CFR 1.63(c)(2) requires that the oath or declaration must identify the foreign application for patent (or inventor's certificate) for which priority is claimed under 37 CFR 1.55, and any foreign application having a filing date before that of the application on which priority is claimed, by specifying the application number, country, day, month, and year of its filing. *Note* MPEP 201.14.

In view of the above, compliance with 37 CFR 1.63(c)(2) or 37 CFR 1.76(b)(6) must be satisfied if applicant desires to claim priority to the foreign application noted in the petition. Any future petition should include a cover letter and be entitled "Renewed Petition under 37 CFR 1.55(c)."

Further correspondence with respect to this matter should be addressed as follows:

By mail: Mail Stop PETITION
Commissioner for Patents
Post Office Box 1450
Alexandria, VA 22313-1450

By hand: Customer Service Window
Mail Stop Petitions
Randolph Building
401 Dulany Street
Alexandria, VA 22314

By fax: (571) 273-8300
ATTN: Office of Petitions

Correspondence regarding this decision may also be filed through the electronic filing system of the USPTO.

To expedite consideration, petitioner may wish to contact the undersigned regarding the filing of the renewed petition under 37 CFR 1.55(c).

Any questions concerning this matter may be directed to the undersigned at (571) 272-3218.

Frances Hicks
Petitions Examiner
Office of Petitions

UNITED STATES PATENT AND TRADEMARK OFFICE

Commissioner for Patents
United States Patent and Trademark Office
P.O. Box 1450
Alexandria, VA 22313-1450
www.uspto.gov

LERNER, DAVID, LITTENBERG,
KRUMHOLZ & MENTLIK
600 SOUTH AVENUE WEST
WESTFIELD, NJ 07090

COPY MAILED

NOV 0 6 2007

OFFICE OF PETITIONS

In re Application of
Xian-Ming Zeng
Application No. 10/646,361
Filed: August 21, 2003
Attorney Docket No. TEVNHC 3.0-587

DECISION ON PETITION
UNDER 37 CFR 1.55(c)

This is a substitute decision on the petition under 37 CFR 1.55(c), filed June 28, 2007, and on the renewed petition under 37 CFR 1.55(c), filed November 1, 2007, to accept an unintentionally delayed claim under 35 U.S.C. § 119(a)-(d) for benefit of priority to the filing date of a foreign United Kingdom application; namely, Application No. 0219514.7, filed August 21, 2002.

The petition is **DISMISSED** as moot for the reason stated below.

On filing, this application claimed benefit of priority to two foreign applications; namely, United Kingdom Application Nos. 1219513.7, filed August 21, 2002, and 1219513.9, filed August 21, 2002. However, in the petitions, petitioner states that the wrong application number was provided for one of the applications – Application No. 1219513.7 should have been 1219514.7, which has the same filing date as the incorrectly cited application.

The current policy of the Office is that, where the application number of the foreign priority document is incorrect but the filing date is correct, no petition and surcharge fee would be required since the Office was able to schedule the application for publication with the filing date given and the prior art date under 35 U.S.C. 102(e) would not be affected. In this regard, petitioner's attention is directed to the USPTO.gov website under the American Inventor's Protection Act of 1999 > Eighteen-Month Publication Questions and Answers, which states:

> **CX12. Applicant filed an application with a foreign priority claim. The applicant identified the correct filing date, April 21, 2004, of the prior foreign application in the claim, but referenced the incorrect application number of the prior foreign application (should have been 2,464,964, instead of 2,464,999). If applicant wants to correct the application number in the priority claim after the four month period would a petition under 37 CFR 1.55(c) and the surcharge set forth in 37 CFR 1.17(t) be required?** (added 4Feb2005)
>
> No, a petition and the surcharge would not be required because the Office was able to properly schedule the application for publication with the filing date given and the prior art date under 35 U.S.C. 102(e) would not be affected.

In view of the above, no petition and surcharge are required to correct the application number of the foreign application. Accordingly, the surcharge fee assessed to the petition under 37 CFR 1.55(c) on June 28, 2007 will be refunded to petitioner's deposit account in due course.

Receipt is acknowledged of the Supplemental Declaration for Utility or Design Patent Application (37 CFR 1.67) received with the renewed petition on November 1, 2007, which corrects the previous error in the application number of the above-noted United Kingdom foreign reference. A Corrected Filing Receipt with the corrected foreign reference has been mailed under separate cover.

This application is being referred to Technology Center AU 1616 for consideration by the examiner of record of the foreign priority claim under 35 U.S.C. § 119(a)-(d). It is noted that a non-final Office action was mailed on July 18, 2007. Petitioner is advised that failure to timely reply will result in the abandonment of this application.

Any inquiries directly pertaining to this matter may be directed to the undersigned at (571) 272-3218.

Frances Hicks
Petitions Examiner
Office of Petitions

UNITED STATES PATENT AND TRADEMARK OFFICE

Commissioner for Patents
United States Patent and Trademark Office
P.O. Box 1450
Alexandria, VA 22313-1450
www.uspto.gov

COPY MAILED

NOV 0 5 2009

OFFICE OF PETITIONS

Lerner, David, Littenberg,
Krumholz & Mentlik
600 South Avenue West
Westfield, NJ 07090

In re Application of	:	
Xian-Ming Zeng	:	
Application No. 10/646,361	:	DECISION ON PETITION
Filed: August 21, 2003	:	
Attorney Docket No. TEVNHC 3.0-587	:	

This is a decision on the petition, filed July 20, 2009, under 37 CFR 1.181 (no fee) requesting withdrawal of the holding of abandonment in the above-identified application which was filed concurrently with a petition under 37 CFR 1.137(b) to revive an unintentionally abandoned application.

The petition under 37 CFR 1.181 is **DISMISSED**.

The Office action rejection mailed February 22, 2008 clearly indicated on page 5 "**THIS ACTION IS FINAL**" although the cover sheet, PTOL-326 indicated "this action is non-final."

Applicant's response was an amendment under 37 CFR 1.116 (the rule covering amendments filed after final action) filed on May 23, 2008. Since the amendment was filed under 37 CFR 1.116, applicant considered the Office action of February 22, 2008 to be a final rejection. This amendment did not question the finality of the action nor did it query the apparent inconsistency of the action itself and the cover sheet. Applicant then filed a Notice of Appeal on August 22, 2008 and the application went abandoned for failure to file an appeal brief. A Notice of Abandonment was mailed June 25, 2009. The petition indicates that applicant contacted the art unit SPE on March 20, 2009 and the SPE indicated that the February, 22, 2008 action was not, in fact, final. The record shows no interview summary confirming this point and the Office issued no supplemental Office action clarifying the status of the finality of the February 2, 2008 action. The record also shows that the claims were twice rejected and that applicant was within his rights to appeal the rejection whether or not the Office action was final.

Petitioner provides a copy of a Request for Withdrawal of Notice of Appeal and Refund of Appeal and Extension Fees with a return post card stamped March 23, 2009 (for reasons unknown this paper was never made part of the application). This paper was not acted upon and MPEP 1215.01 indicates that a request for withdrawal of appeal with no allowable claims is treated as an express abandonment. The petition suggests express abandonment was not what applicant desired. The Notice of Appeal was properly filed and the notice per se cannot be withdrawn. The application was properly abandoned for failure to file an appeal brief in a timely manner.

For the reasons listed above, the petition to withdraw the holding of abandonment is dismissed.

The petition under 37 CFR 1.137(b) is **DISMISSED**.

Any request for reconsideration of this decision must be submitted within TWO (2) MONTHS from the mail date of this decision. Extensions of time under 37 CFR 1.136(a) are permitted. The reconsideration request should include a cover letter entitled "Renewed Petition under 37 CFR 1.137(b)." This is **not** a final agency action within the meaning of 5 U.S.C. § 704.

The application became abandoned as a result of petitioner's failure to file an appeal brief (and fee required by 37 CFR 41.20(b)(2)) within the time period provided in 37 CFR 41.37(a)(1). As an appeal brief (and appeal brief fee) was not filed within two (2) months of the Notice of Appeal filed August 22, 2008, and no extensions of time under the provisions of 37 CFR 1.136(a) were obtained, the appeal was dismissed and the proceedings as to the rejected claims were terminated. See 37 CFR 41.37(b). As no claim was allowed, the application became abandoned on October 23, 2008. See MPEP 1215.04. A Notice of Abandonment was mailed June 25, 2009.

A grantable petition under 37 CFR 1.137(b) must be accompanied by: (1) the required reply, unless previously filed; (2) the petition fee as set forth in 37 CFR 1.17(m); (3) a statement that the entire delay in filing the required reply from the due date for the reply until the filing of a grantable petition pursuant to 37 CFR 1.137(b) was unintentional; and (4) any terminal disclaimer (and fee as set forth in 37 CFR 1.20(d)) required by 37 CFR 1.137(d). Where there is a question as to whether either the abandonment or the delay in filing a petition under 37 CFR 1.137 was unintentional, the Director may require additional information. *See* MPEP 711.03(c)(II)(C) and (D). The instant petition lacks item (1).

As to item (1) a Notice of Appeal was filed on August 22, 2008 and no reply has been received.

As authorized petitioner's deposit account will be charged $1,620.00 for the petition fee.

Telephone inquiries concerning this decision should be directed to Kimberly Inabinet at (571) 272-4618.

Any renewed petition may be addressed as follows:

By Mail: Mail Stop PETITION
Commissioner for Patents
P. O. Box 1450
Alexandria, VA 22313-1450

By hand: U. S. Patent and Trademark Office
Customer Service Window, Mail Stop Petitions
Randolph Building
401 Dulany Street
Alexandria, VA 22314

The centralized facsimile number is **(571) 273-8300.**

Correspondence regarding this decision may also be filed through the electronic filing system of the USPTO.

Telephone inquiries concerning this decision should be directed to Kimberly Inabinet at (571) 272-4618.

Carl Friedman
Petitions Examiner
Office of Petitions

UNITED STATES PATENT AND TRADEMARK OFFICE

COMMISSIONER FOR PATENTS
UNITED STATES PATENT AND TRADEMARK OFFICE
P.O. BOX 1450
ALEXANDRIA, VA 22313-1450
www.uspto.gov

MAILED

MAR 17 2010

OFFICE OF PETITIONS

RATNERPRESTIA
P.O. BOX 980
VALLEY FORGE PA 19482

In re Application of :
Xian-Ming Zeng :
Application No. 10/646,361 : DECISION ON PETITION
Filed: August 21, 2003 :
Attorney Docket No. TEVNHC 3.0-587 :

This is a decision on the renewed petition under the unintentional provisions of 37 CFR 1.137(b), filed December 18, 2009, to revive the above-identified application.

The petition is **GRANTED**.

The application became abandoned as a result of petitioner's failure to file an appeal brief (and fee required by 37 CFR 41.20(b)(2)) within the time period provided in 37 CFR 41.37(a)(1). As an appeal brief (and appeal brief fee) was not filed within two (2) months of the Notice of Appeal filed August 22, 2008, and no extensions of time under the provisions of 37 CFR 1.136(a) were obtained, the appeal was dismissed and the proceedings as to the rejected claims were terminated. See 37 CFR 41.37(b). As no claim was allowed, the application became abandoned on October 23, 2008. See MPEP 1215.04. A Notice of Abandonment was mailed June 25, 2009.

The petition satisfies the requirements of 37 CFR 1.137(b) in that petitioner has supplied (1) the reply in the form of RCE (Request for Continued Examination), with the required fee of $810, (2) the petition fee of $1,620, and (3) a proper statement of unintentional delay. Accordingly the RCE is accepted as being unintentionally delayed.

It is not apparent whether the person signing the statement of unintentional delay was in a position to have firsthand or direct knowledge of the facts and circumstances of the delay at issue. Nevertheless, such statement is being treated as having been made as the result of a reasonable inquiry into the facts and circumstances of such delay. See 37 CFR 10.18(b) and Changes to Patent Practice and Procedure; Final Rule Notice, 62 Fed. Reg. 53131, 53178 (October 10, 1997), 1203 Off. Gaz. Pat. Office 63, 103 (October 21, 1997). In the event that such an inquiry has not been made, petitioner must make such an inquiry. If such inquiry results in the discovery that it is not correct that the entire delay in filing the required reply from the due date for the reply until the

date for the reply until the filing of a grantable petition pursuant to 37 CFR 1.137(b) was unintentional, petitioner must notify the Office.

Telephone inquiries concerning this decision should be directed to Kimberly Inabinet at (571) 272-4618.

This application is being referred to the Technology Center AU 1616 for appropriate action in the normal course of business for processing of the RCE received December 18, 2009.

/Kimberly Inabinet/

Kimberly Inabinet
Petitions Examiner
Office of Petitions

UNITED STATES PATENT AND TRADEMARK OFFICE

Commissioner for Patents
United States Patent and Trademark Office
P.O. Box 1450
Alexandria, VA 22313-1450
www.uspto.gov
DIW 04-05

IVAX CORPORATION
4400 BISCAYNE BOULEVARD
MIAMI FL 33137

COPY MAILED

APR 11 2005

OFFICE OF PETITIONS

In re Application of :
Xian-Ming Zeng :
Application No. 10/646,363 : ON PETITION
Filed: 21 August, 2003 :
Att'y Docket No. NHC19586-USA :

This is a decision on the petition under 1.137(b),[1] filed on 24 November, 2004, to revive the above-identified application.

The petition is **GRANTED**.

This application became abandoned on 30 March, 2004, for failure

---

[1]Effective December 1, 1997, the provisions of 37 CFR 1.137(b) now provide that where the delay in reply was unintentional, a petition may be filed to revive an abandoned application or a lapsed patent pursuant to 37 CFR 1.137(b). A grantable petition filed under the provisions of 37 CFR 1.137(b) must be accompanied by:

(1) the required reply, unless previously filed. In a nonprovisional application abandoned for failure to prosecute, the required reply may be met by the filing of a continuing application. In a nonprovisional application filed on or after June 8, 1995, and abandoned for failure to prosecute, the required reply may also be met by the filing of a request for continued examination in compliance with § 1.114. In an application or patent, abandoned or lapsed for failure to pay the issue fee or any portion thereof, the required reply must be the payment of the issue fee or any outstanding balance thereof. In an application abandoned for failure to pay the publication fee, the required reply must include payment of the publication fee.

(2) the petition fee as set forth in 37 CFR 1.17(m);

(3) a statement that the entire delay in filing the required reply from the due date for the reply until the filing of a grantable petition pursuant to 37 CFR 1.137(b) was unintentional. The Commissioner may required additional information where there is a question whether the delay was unintentional; and

(4) any terminal disclaimer (and fee as set forth in 37 CFR 1.20(d)) required pursuant to 37 CFR 1.137(c)).

to timely respond to the Notice to File Missing Parts of Nonprovisional Application mailed on 29 January, 2004, which set a two (2) month shortened period for reply. No extensions of the time for reply in accordance with 37 CFR 1.136(a) were obtained. Notice of Abandonment was mailed on 29 October, 2004.

Petitioner has submitted an executed declaration as well as the required fees.

As the five (5) month extension of time received on 24 November, 2004, was filed outside of the extendable period for reply to the Notice mailed on 29 January, 2004, this extension of time is unnecessary and will be refunded. The fee paid of $2,080.00 will be credited to counsel's deposit account, No. 50-0943, as authorized on the fee transmittal sheet filed with the present petition.

The application file is being forwarded to the Office of Initial Patent Examination for further processing.

Telephone inquiries concerning this matter may be directed to the undersigned at (571)272-3231.

DIWood

Douglas I. Wood
Senior Petitions Attorney
Office of Petitions

UNITED STATES
PATENT AND
TRADEMARK OFFICE

Commissioner for Patents
Washington, DC 20231
www.uspto.gov

10/29/03

Bromberg and Sunstein LLP
125 Summer Street
Boston MA 02110-1618

Dear Applicant:

The Box PGPub replacement drawings for application number 10/646,365 received on 9/26/03 by the U. S. Patent and Trademark Office will be included for patent publication.

Telephone inquiries should be directed to Customer Service, Office of Initial Patent Examination, at 703-308-1202.

UNITED STATES
PATENT AND
TRADEMARK OFFICE

Commissioner for Patents
Washington, DC 20231
www.uspto.gov

Signature of Reviewer, Office of Initial Patent Examination

UNITED STATES PATENT AND TRADEMARK OFFICE

COMMISSIONER FOR PATENTS
UNITED STATES PATENT AND TRADEMARK OFFICE
P.O. BOX 1450
ALEXANDRIA, VA 22313-1450
www.uspto.gov

COPY MAILED

SEP 0 3 2004

OFFICE OF PETITIONS

James A. Quinton, Esq.
FRISENDA QUINTON & NICHOLSON
425 Park Avenue, 5th Floor
New York NY 10022

Applicant: Smith et al.
Appl. No.: 10/646,369
Filing Date: August 22, 2003
Title: STORAGE STABLE PAN RELEASE COATING AND CLEANER
Pub. No.: US 2004/0086623 A1
Pub. Date: May 6, 2004

Patent application publication No. US 2004/0086623 A1 published on May 6, 2004, with the incorrect specification, drawings and claims..

This is a decision to *sua sponte* issue a corrected patent application publication, publishing the application as originally filed.

The corrected patent application publication will be published in due course, unless the application is allowed and the patent issues before the application is republished.

Inquires concerning this communication should be directed to Mark Polutta at (703) 308-8122 (voice) or (703) 746-3465 (facsimile).

Mark O. Polutta
Office of Patent Legal Administration
Office of the Deputy Commissioner
for Patent Examination Policy

UNITED STATES PATENT AND TRADEMARK OFFICE

JAN 26 2007

Commissioner for Patents
United States Patent and Trademark Office
P.O. Box 1450
Alexandria, VA 22313-1450
www.uspto.gov

MARINA LARSON & ASSOCIATES, LLC
P.O. BOX 4928
DILLON CO 80435

In re Application of	:
Martin Gleave et al	:
Serial No.: 10/646,391	: PETITION DECISION
Filed: August 21, 2003	:
Attorney Docket No.: UBC.P-035	:

This is in response to the petition under 37 CFR 1.144, filed October 3, 2006, requesting withdrawal of an improper restriction requirement.

DISCUSSION

Applicant's claims on which restriction was based are as follows:

> 1. **A method for treatment of melanoma in a mammalian subject, comprising the step of administering to the subject a therapeutic agent effective to reduce the effective amount of clusterin in the melanoma cells.**
>
> 6. The method of claim 5, wherein the antisense oligodeoxynucleotide consists essentially of an oligodeoxynucleotide selected from the group consisting of Seq. ID. Nos. 2 to 19.
>
> 12. The method of claim 11, wherein the RNA molecule consists essentially of an oligodeoxynucleotide selected from the group consisting of Seq. ID. Nos.20 to 25.

Applicants argue in M.P.E.P. 803.04 permits election of ten species of oligonucleotides for examination purposes in certain types of applications and that the examiner has given no reasons to limit applicants' election to a single nucleotide. Applicants further argue that the oligonucleotides of claim 6 are not new and are disclosed in WO 00/049937 and US counterpart 2002/0128229, both of which are cited in the specification. Applicants' contention is correct, thus minimizing any burden on the examiner to search more than one sequence.

A correct characterization of the above claims is that claim 1 is a linking claim (as is newly added claim 14) which links each sequence set forth in claim 6 (or claim 11) to it and that the examiner has required restriction between the various sequences set forth and examined the elected sequence for patentability in combination with the linking claim. Having found the elected sequence patentable over the prior at, the linking claim was fully examined for patentability. The examiner has now indicated most dependent claims patentable and, by Advisory Action, independent claim 14, from which all dependent claims depend, patentable.

Having done so, all claims linked by claim 14, including all sequences, must be considered for patentability.

DECISION

The petition is **GRANTED.**

The restriction requirement is withdrawn and all sequences will be considered for patentability.

In view of the above decision and indication of allowability of independent linking claim 14 in the Advisory Action, mailed December 20, 2006, the Final Office action is, of necessity, withdrawn. The application will be forwarded to the examiner for consideration of patentability of all linked claims and their sequences.

Should there be any questions about this decision please contact William R. Dixon, Jr., by letter addressed to Director, TC 1600, at the address listed above, or by telephone at 571-272-0519 or by facsimile sent to the general Office facsimile number, 571-273-8300.

George C. Elliott

George C. Elliott.
Director, Technology Center 1600

UNITED STATES PATENT AND TRADEMARK OFFICE

Commissioner for Patents
United States Patent and Trademark Office
P.O. Box 1450
Alexandria, VA 22313-1450
www.uspto.gov

THORPE NORTH & WESTERN, LLP
8180 SOUTH 700 EAST, SUITE 200
SANDY, UT 84070

COPY MAILED

NOV 0 4 2005

OFFICE OF PETITIONS

In re Application of :
James A. Grady Jr. :
Application No. 10/646,394 : ON PETITION
Filed: August 22, 2003 :
Attorney Docket No. 21956.NP :

This is a decision on the petition under 37 CFR 1.137(b), filed August 29, 2005, to revive the above-identified application.

The petition is **GRANTED.**

The above-identified application became abandoned for failure to reply in a timely manner to the non-final Office action mailed December 17, 2004, which set a shortened statutory period for reply of three (3) months. No extensions of time under the provisions of 37 CFR 1.136(a) were obtained. Accordingly, the application became abandoned on March 18, 2005.

An extension of time under 37 CFR 1.136 must be filed prior to the expiration of the maximum extendable period for reply. See In re Application of S., 8 USPQ2d 1630, 1631 (Comm'r Pats. 1988). Accordingly, the $510 extension of time submitted on August 29, 2005 was subsequent to the maximum extendable period for reply, this fee is unnecessary and will be credited to petitioner's deposit account as authorized.

The petition satisfies the requirement of 37 CFR 1.137 (b) in that petitioner has supplied (1) the reply in the form of an Amendment; (2) the petition fee of $750; and (3) the required statement of unintentional delay have been received. Accordingly, the petition filed August 29, 2005 is accepted as having been unintentionally delayed.

Telephone inquiries concerning this decision should be directed to the undersigned at (571) 272-3229.

The application matter is being referred to Technology Center 2600, Art Unit 2636 for further processing.

Retta Williams

Retta Williams
Petitions Examiner
Office of Petitions
Office of the Deputy Commissioner
for Patent Examination Policy

cc: Vaughn W. North
P.O. Box 1219
Sandy, UT 84091-1219

UNITED STATES PATENT AND TRADEMARK OFFICE

Commissioner for Patents
United States Patent and Trademark Office
P.O. Box 1450
Alexandria, VA 22313-1450
www.uspto.gov

WHITE & CASE LLP
PATENT DEPARTMENT
1155 AVENUE OF THE AMERICAS
NEW YORK NY 10036

COPY MAILED

JUN 09 2005

OFFICE OF PETITIONS

In re Application of
Kiesel, et al.
Application No. 10/646,402
Filed: August 22, 2003
Attorney Docket No. 1140668-0015 CON

: DECISION ON PETITION
: UNDER 37 CFR 1.78(a)(3)

This is a decision on the petition under 37 CFR 1.78(a)(3), filed March 22, 2004 (certificate of mailing date March 17, 2004), to accept an unintentionally delayed claim under 35 U.S.C. §120 for the benefit of the prior-filed nonprovisional applications that are identified in the present petition.

The petition is **DISMISSED**.

A petition for acceptance of a claim for late priority under 37 CFR 1.78(a)(3) is only applicable to those applications filed on or after November 29, 2000. Further, the petition is appropriate only after the expiration of the period specified in 37 CFR 1.78(a)(2)(ii). In addition, the petition under 37 CFR 1.78(a)(3) must be accompanied by:

(1) the reference required by 35 U.S.C. § 120 and 37 CFR 1.78(a)(2)(i) of the prior-filed application, unless previously submitted;
(2) the surcharge set forth in § 1.17(t); and
(3) a statement that the entire delay between the date the claim was due under 37 CFR 1.78(a)(2)(ii) and the date the claim was filed was unintentional. The Commissioner may require additional information where there is a question whether the delay was unintentional.

The instant petition does not comply with item (1)

37 CFR 1.78(a)(2)(i) requires that any nonprovisional application claiming the benefit of one or

more prior-filed copending nonprovisional applications must contain or be amended to contain a reference to each such prior-filed application, identifying it by application number (consisting of the series code and serial number) and indicating the relationship of the applications. The relationship between the applications is whether the subject application is a continuation, divisional, or continuation-in-part of a prior-filed nonprovisional application. An example of a proper benefit claim is: "This application is a continuation of Application No. 10/---, filed---." A benefit claim that merely states: "This application claims the benefit of Application No. 10/---, filed---," does not comply with 37 CFR 1.72(a)(2)(i) since the proper relationship, which includes the type of continuing application, is not stated. Petitioner has failed to identify the relationship of the newly claimed applications to the subject application.

Also, the status of each nonprovisional parent application (if it is patented or abandoned) should also be indicated, following the filing date of the parent nonprovisional application. See MPEP Section 201.11, Rev. 2, May 2004, Reference to Prior Application.

In addition, petitioner has not submitted the benefit claim as an amendment to the first line of the specification or in an Application Data Sheet (ADS), as is required by 37 CFR 1.78(a)(2)(i) MPEP Section 201.11 III D.

Accordingly, before the petition under 37 CFR § 1.78(a)(3) can be granted, a renewed petition under 37 CFR § 1.78(a)(3) and an amendment (complying with 37 CFR 1.121) or an ADS stating the relationship of the prior-filed applications to the instant application is required.

Further correspondence with respect to this matter should be addressed as follows:

By mail: Mail Stop PETITIONS
Commissioner for Patents
Post Office Box 1450
Alexandria, VA 22313-1450

By hand: Customer Service Window
Mail Stop Petitions
Randolph Building
401 Dulany Street
Alexandria, VA 22314

By fax: (703) 872-9306
ATTN: Office of Petitions

Any questions concerning this matter may be directed to Petitions Attorney E. Shirene Willis at (571) 272-3230.

Frances Hicks
Lead Petitions Examiner
Office of Petitions
Office of the Deputy Commissioner
for Patent Examination Policy

UNITED STATES PATENT AND TRADEMARK OFFICE

Commissioner for Patents
United States Patent and Trademark Office
P.O. Box 1450
Alexandria, VA 22313-1450
www.uspto.gov

WHITE & CASE LLP
PATENT DEPARTMENT
1155 AVENUE OF THE AMERICAS
NEW YORK, NY 10036

COPY MAILED

JAN 27 2006

OFFICE OF PETITIONS

In re Application of :
Kiesel, et al. :
Application No. 10/646,402 : DECISION ON PETITIONS
Filed: August 22, 2003 : UNDER 37 CFR 1.78(a)(3) AND
Attorney Docket No. 1140668-0015 CON : 37 CFR 1.78(a)(6)

This is a decision on the renewed petition, filed November 17, 2005, which is being treated as both a petition under 37 CFR §§ 1.78(a)(3) and 1.78(a)(6) to accept an unintentionally delayed claim under 35 U.S.C. §§120 and 119(e) for the benefit of the prior-filed applications set forth in the concurrently filed amendment; namely, nonprovisional Application Nos. 09/950,848; 09/950,726; 09/950,723; 09/950,731; and Patent No. 6,954,680 (10/052,293) (37 CFR 1.78(a)(3)); and provisional Application No. 60/305,199 (37 CFR 1.78(a)(6)).

The petitions are **Dismissed**.

The present nonprovisional application was filed after November 29, 2000, and the claim herein for the benefit of priority to the prior-filed applications is submitted after expiration of the period specified in 37 CFR 1.78(a)(2)(ii) and 1.78(a)(5)(ii). Therefore, this is a proper petition under 37 CFR 1.78(a)(3) and 1.78(a)(6).

A petition for acceptance of a claim for late priority under 37 CFR §§ 1.78(a)(3) and 1.78(a)(6) is only applicable to those applications filed on or after November 29, 2000. Further, the petition is appropriate only after the expiration of the period specified in 37 CFR §§ 1.78(a)(2)(ii) and 1.78(a)(5)(ii). In addition, the petition under 37 CFR §§ 1.78(a)(3) and 1.78(a)(6) must be accompanied by:

(1) the reference required by 35 U.S.C. §§ 120 and 119(e) and 37 CFR §§ 1.78(a)(2)(i) and 1.78(a)(5)(i) of the prior-filed application, unless previously submitted;
(2) the surcharge set forth in § 1.17(t); and
(3) a statement that the entire delay between the date the claim was due under 37 CFR §§ 1.78(a)(2)(ii) and 1.78(a)(5)(ii) and the date the claim was filed was unintentional. The Commissioner may require additional where there is a question whether the delay was unintentional.

The petition fails to satisfy item (1) above. In this regard, the amendment filed November 16, 2005 to claim benefit of the prior-filed applications references an application by the patent number rather than by the application number as required by 37 CFR 1.78(a)(2)(i), which states:

> Except for a continued prosecution application filed under § 1.53(d), any nonprovisional application claiming the benefit of one or more prior-filed copending nonprovisional applications * * * must contain or be amended to contain a reference to each such prior-filed application, **identifying it by application number (consisting of the series code and serial number)** * * * and indicating the relationship of the applications. [Emphasis supplied.]

Accordingly, a substitute amendment complying with 37 CFR 1.121 and satisfying the requirements of 37 CFR 1.78(a)(2)(i) must be submitted, along with a renewed petition under 37 CFR 1.78(a)(3) and 1.78(a)(6).

Further correspondence with respect to this matter should be addressed as follows:

By mail:	Mail Stop PETITIONS Commissioner for Patents Post Office Box 1450 Alexandria, VA 22313-1450
By hand:	Customer Service Window Mail Stop Petitions Randolph Building 401 Dulany Street Alexandria, VA 22314
By fax:	(571) 273-8300 ATTN: Office of Petitions

Any questions concerning this matter may be directed to the undersigned at (571) 272-3218.

Frances Hicks
Petitions Examiner
Office of Petitions

UNITED STATES PATENT AND TRADEMARK OFFICE

Commissioner for Patents
United States Patent and Trademark Office
P.O. Box 1450
Alexandria, VA 22313-1450
www.uspto.gov

WHITE & CASE LLP
PATENT DEPARTMENT
1155 AVENUE OF THE AMERICAS
NEW YORK, NY 10036

COPY MAILED

JUL 25 2006

OFFICE OF PETITIONS

In re Application of
Kiesel, et al.
Application No. 10/646,402
Filed: August 22, 2003
Attorney Docket No. 1140668-0015 CON

: DECISION ON PETITIONS
: UNDER 37 CFR 1.78(a)(3) AND
: 37 CFR 1.78(a)(6)

This is a decision on the renewed petition under 37 CFR §§ 1.78(a)(3) and 1.78(a)(6) , filed March 16, 2006, to accept an unintentionally delayed claim under 35 U.S.C. §§120 and 119(e) for the benefit of the prior-filed applications set forth in the concurrently filed amendment; namely, nonprovisional Application Nos. 09/950,848; 09/950,726; 09/950,723; 09/950,731; and 10/052,293 (37 CFR 1.78(a)(3)); and provisional Application No. 60/305,199 (37 CFR 1.78(a)(6)).

The petition is **GRANTED.**

The present nonprovisional application was filed after November 29, 2000, and the claim herein for the benefit of priority to the prior-filed applications is submitted after expiration of the period specified in 37 CFR 1.78(a)(2)(ii) and 1.78(a)(5)(ii). Therefore, this is a proper petition under 37 CFR 1.78(a)(3) and 1.78(a)(6).

A petition for acceptance of a claim for late priority under 37 CFR §§ 1.78(a)(3) and 1.78(a)(6) is only applicable to those applications filed on or after November 29, 2000. Further, the petition is appropriate only after the expiration of the period specified in 37 CFR §§ 1.78(a)(2)(ii) and 1.78(a)(5)(ii). In addition, the petition under 37 CFR §§ 1.78(a)(3) and 1.78(a)(6) must be accompanied by:

(1) the reference required by 35 U.S.C. §§ 120 and 119(e) and 37 CFR §§ 1.78(a)(2)(i) and 1.78(a)(5)(i) of the prior-filed application, unless previously submitted;
(2) the surcharge set forth in § 1.17(t); and
(3) a statement that the entire delay between the date the claim was due under 37 CFR §§ 1.78(a)(2)(ii) and 1.78(a)(5)(ii) and the date the claim was filed was unintentional. The Director may require additional where there is a question whether the delay was unintentional.

Additionally, the instant nonprovisional application must be pending at the time of filing of the reference to the prior-filed provisional application(s) as required by 37 CFR 1.78(a)(5)(ii). Further, the nonprovisional application(s) claiming the benefit of the prior-filed provisional application(s) must have been filed within twelve months of the filing date of the prior-filed provisional application(s).

Copied from 10646422 on 03/26/2008

All of the above requirements having been satisfied, the late claim for benefit of priority to the prior-filed applications under 35 U.S.C. §§ 120 and 119(e) is accepted as being unintentionally delayed.

37 CFR §§ 1.78(a)(3) and 1.78(a)(6) require a statement that the entire delay between the date the claim was due under 37 CFR §§ 1.78(a)(2)(ii) and 1.78(a)(5)(ii) and the date the claim was filed was unintentional. Since the statement appearing in the petition varies from the required language, the statement is being construed as the statement required by 37 CFR §§1.78(a)(3) and 1.78(a))(6). If this is not a correct reading of the statement appearing in the petition, petitioner should promptly notify the Office.

The granting of the petition to accept the delayed benefit claim to the prior-filed applications under 37 CFR §§ 1.78(a)(3) and 1.78(a)(6) should not be construed as meaning that this application is entitled to the benefit of the filing date of the prior-filed applications. In order for this application to be entitled to the benefit of the prior-filed applications, all other requirements under 35 U.S.C. §§120 and 1.78(a)(1) and (a)(2) and under 35 U.S.C. §119(e) and 37 CFR 1.78(a)(4) and (a)(5) must be met. Similarly, the fact that the corrected Filing Receipt accompanying this decision on petition includes the prior-filed applications should not be construed as meaning that applicant is entitled to the claim for benefit of priority to the prior-filed applications noted thereon. Accordingly, the examiner will, in due course, consider this benefit claim and determine whether the application is entitled to the benefit of the earlier filing date.

A corrected Filing Receipt, which includes the priority claim to the prior-filed applications, accompanies this decision on petition.

Any questions concerning this decision on petition may be directed to the undersigned at (571) 272-3218. All other inquiries concerning either the examination procedures or status of the application should be directed to the Technology Center.

This application is being referred to Technology Center Art Unit 2125 for consideration by the examiner of the claim for benefit of priority under 35 U.S.C. § §120 and 119(e) to the prior-filed nonprovisional and provisional applications.

Frances Hicks
Petitions Examiner
Office of Petitions

ATTACHMENT : Corrected Filing Receipt

Copied from 10646422 on 03/26/2008

UNITED STATES PATENT AND TRADEMARK OFFICE

UNITED STATES DEPARTMENT OF COMMERCE
United States Patent and Trademark Office
Address: COMMISSIONER FOR PATENTS
P.O. Box 1450
Alexandria, Virginia 22313-1450
www.uspto.gov

APPL NO.	FILING OR 371 (c) DATE	ART UNIT	FIL FEE REC'D	ATTY.DOCKET NO	DRAWINGS	TOT CLMS	IND CLMS
10/646,402	08/22/2003	2125	970	1140668-0015 CON	8	25	2

CONFIRMATION NO. 9503

CORRECTED FILING RECEIPT

OC000000019745084

007470
WHITE & CASE LLP
PATENT DEPARTMENT
1155 AVENUE OF THE AMERICAS
NEW YORK, NY 10036

Date Mailed: 07/25/2006

Receipt is acknowledged of this regular Patent Application. It will be considered in its order and you will be notified as to the results of the examination. Be sure to provide the U.S. APPLICATION NUMBER, FILING DATE, NAME OF APPLICANT, and TITLE OF INVENTION when inquiring about this application. Fees transmitted by check or draft are subject to collection. Please verify the accuracy of the data presented on this receipt. **If an error is noted on this Filing Receipt, please mail to the Commissioner for Patents P.O. Box 1450 Alexandria Va 22313-1450. Please provide a copy of this Filing Receipt with the changes noted thereon. If you received a "Notice to File Missing Parts" for this application, please submit any corrections to this Filing Receipt with your reply to the Notice. When the USPTO processes the reply to the Notice, the USPTO will generate another Filing Receipt incorporating the requested corrections (if appropriate).**

Applicant(s)

Martin Kiesel, Poxdorf, GERMANY;
Wolfgang Mutscheller, Stuttgart, GERMANY;

Power of Attorney: The patent practitioners associated with Customer Number **007470**.

Domestic Priority data as claimed by applicant

This application is a CON of 10/226,979 08/23/2002
which is a CIP of 09/950,848 09/12/2001
which claims benefit of 60/305,199 07/13/2001
and said 10/226,979 08/23/2002
is a CIP of 09/950,726 09/12/2001
which claims benefit of 60/305,199 07/13/2001
and said 10/226,979 08/23/2002
is a CIP of 09/950,723 09/12/2001 PAT 6,975,913
which claims benefit of 60/305,199 07/13/2001
and said 10/226,979 08/23/2002
is a CIP of 09/950,731 09/12/2001
which claims benefit of 60/305,199 07/13/2001
and said 10/226,979 08/23/2002
is a CIP of 10/052,293 01/18/2002 PAT 6,954,680
which claims benefit of 60/305,199 07/13/2001

Foreign Applications

If Required, Foreign Filing License Granted: 11/17/2003

The country code and number of your priority application, to be used for filing abroad under the Paris

Copied from 10646422 on 03/26/2008

Convention, is US10/646,402

Projected Publication Date: Not Applicable

Non-Publication Request: No

Early Publication Request: No

Title

Electronic fingerprints for machine control and production machines

Preliminary Class

700

PROTECTING YOUR INVENTION OUTSIDE THE UNITED STATES

Since the rights granted by a U.S. patent extend only throughout the territory of the United States and have no effect in a foreign country, an inventor who wishes patent protection in another country must apply for a patent in a specific country or in regional patent offices. Applicants may wish to consider the filing of an international application under the Patent Cooperation Treaty (PCT). An international (PCT) application generally has the same effect as a regular national patent application in each PCT-member country. The PCT process **simplifies** the filing of patent applications on the same invention in member countries, but **does not result** in a grant of "an international patent" and does not eliminate the need of applicants to file additional documents and fees in countries where patent protection is desired.

Almost every country has its own patent law, and a person desiring a patent in a particular country must make an application for patent in that country in accordance with its particular laws. Since the laws of many countries differ in various respects from the patent law of the United States, applicants are advised to seek guidance from specific foreign countries to ensure that patent rights are not lost prematurely.

Applicants also are advised that in the case of inventions made in the United States, the Director of the USPTO must issue a license before applicants can apply for a patent in a foreign country. The filing of a U.S. patent application serves as a request for a foreign filing license. The application's filing receipt contains further information and guidance as to the status of applicant's license for foreign filing.

Applicants may wish to consult the USPTO booklet, "General Information Concerning Patents" (specifically, the section entitled "Treaties and Foreign Patents") for more information on timeframes and deadlines for filing foreign patent applications. The guide is available either by contacting the USPTO Contact Center at 800-786-9199, or it can be viewed on the USPTO website at http://www.uspto.gov/web/offices/pac/doc/general/index.html.

For information on preventing theft of your intellectual property (patents, trademarks and copyrights), you may wish to consult the U.S. Government website, http://www.stopfakes.gov. Part of a Department of Commerce initiative, this website includes self-help "toolkits" giving innovators guidance on how to protect intellectual property in specific countries such as China, Korea and Mexico. For questions regarding patent enforcement issues, applicants may call the U.S. Government hotline at 1-866-999-HALT (1-866-999-4158).

LICENSE FOR FOREIGN FILING UNDER
Title 35, United States Code, Section 184
Title 37, Code of Federal Regulations, 5.11 & 5.15

GRANTED

Copied from 10646422 on 03/26/2008

The applicant has been granted a license under 35 U.S.C. 184, if the phrase "IF REQUIRED, FOREIGN FILING LICENSE GRANTED" followed by a date appears on this form. Such licenses are issued in all applications where the conditions for issuance of a license have been met, regardless of whether or not a license may be required as set forth in 37 CFR 5.15. The scope and limitations of this license are set forth in 37 CFR 5.15(a) unless an earlier license has been issued under 37 CFR 5.15(b). The license is subject to revocation upon written notification. The date indicated is the effective date of the license, unless an earlier license of similar scope has been granted under 37 CFR 5.13 or 5.14.

This license is to be retained by the licensee and may be used at any time on or after the effective date thereof unless it is revoked. This license is automatically transferred to any related applications(s) filed under 37 CFR 1.53(d). This license is not retroactive.

The grant of a license does not in any way lessen the responsibility of a licensee for the security of the subject matter as imposed by any Government contract or the provisions of existing laws relating to espionage and the national security or the export of technical data. Licensees should apprise themselves of current regulations especially with respect to certain countries, of other agencies, particularly the Office of Defense Trade Controls, Department of State (with respect to Arms, Munitions and Implements of War (22 CFR 121-128)); the Bureau of Industry and Security, Department of Commerce (15 CFR parts 730-774); the Office of Foreign Assets Control, Department of Treasury (31 CFR Parts 500+) and the Department of Energy.

NOT GRANTED

No license under 35 U.S.C. 184 has been granted at this time, if the phrase "IF REQUIRED, FOREIGN FILING LICENSE GRANTED" DOES NOT appear on this form. Applicant may still petition for a license under 37 CFR 5.12, if a license is desired before the expiration of 6 months from the filing date of the application. If 6 months has lapsed from the filing date of this application and the licensee has not received any indication of a secrecy order under 35 U.S.C. 181, the licensee may foreign file the application pursuant to 37 CFR 5.15(b).

Copied from 10646422 on 03/26/2008

UNITED STATES PATENT AND TRADEMARK OFFICE

Commissioner for Patents
United States Patent and Trademark Office
P.O. Box 1450
Alexandria, VA 22313-1450
www.uspto.gov

MAIL

Davy E. Zoneraich, Esq.
P.O. BOX 1018
Somerville, NJ 08876

JUL 1 8 2005

DIRECTOR OFFICE
TECHNOLOGY CENTER 2100

In re Application of:
Oleg Logvinov
Application No. 10/646,413
Filed: August 21, 2003
For: USE OF HYBRID (HW/DSP/MCU/SW) ARCHITECTURES FOR POWERLINE OFDM COMMUNICATION FIELD

DECISION ON REQUEST FOR WITHDRAWAL AS ATTORNEY

This is a decision on the Request To Withdraw from Representation filed June 27, 2005.

A grantable request to withdraw as attorney of record should indicate thereon the present mailing addresses of the attorney(s) who is/are withdrawing from the record and of the applicant. The request for withdrawal must be signed by every attorney seeking to withdraw or contain a clear indication that one attorney is signing on behalf of another/others. A request to withdraw will not be approved unless at least 30 (thirty) days would remain between the date of approval and the later of the expiration date of a time to file a response or the expiration date of the maximum time period which can be extended under 37 C.F.R. § 1. 136(a). The effective date of withdrawal being the date of decision and not the date of request. See M.P.E.P. § 402.06. **37 C.F.R. § 1.36 further requires that the applicant or patent owner be notified of the withdrawal of the attorney or agent.**

The request does not contain a clear indication that the Applicant has been notified of the request for withdrawal.

Accordingly, the request is **DENIED**.

All future communications from the United States Patent and Trademark Office (Office) will continue to be directed to the above-listed address until otherwise notified by applicant. Applicant is reminded of the obligation to promptly notify the Office of any change in correspondence address to ensure receipt of all communications from the Office.

Michelle A. Eason for

Vincent N. Trans
Special Program Examiner
Technology Center 2100
Computer Architecture, Software, and
Information Security
571-272-3613

UNITED STATES PATENT AND TRADEMARK OFFICE

Commissioner for Patents
United States Patent and Trademark Office
P.O. Box 1450
Alexandria, VA 22313-1450
www.uspto.gov

BLAKELY, SOKOLOFF, TAYLOR & ZAFMAN
1279 OAKMEAD PARKWAY
SUNNYVALE, CA 94085-4040

COPY MAILED

FEB 13 2008

OFFICE OF PETITIONS

In re Application of
Ophir Rachman et al.
Application No. 10/646,416
Filed: August 21, 2003
Attorney Docket No. 6599P011

DECISION ON PETITION
TO WITHDRAW
FROM RECORD

This is a decision on the Request to Withdraw as attorney or agent under 37 C.F.R. § 1.36(b) or 37 C.F.R. § 10.40 filed January 22, 2008.

The request is **APPROVED**.

A grantable request to withdraw as attorney/agent of record must be signed by every attorney/agent seeking to withdraw or contain a clear indication that one attorney is signing on behalf of another/others. A request to withdraw will not be approved unless at least 30 (thirty) days would remain between the date of approval and the later of the expiration date of a time to file a response or the expiration date of the maximum time period which can be extended under 37 C.F.R. § 1.136(a).

The request was signed by Marina Portnova on behalf of all attorneys/agents of record. All attorneys/agents of record have been withdrawn.

The request to change the correspondence of record is not acceptable as the requested correspondence address is not that of (1) the first named signing inventor; or (2) an intervening assignee of the entire interest under 37 C.F.R. 3.71. Accordingly, all correspondence will be mailed to the first named inventor. A courtesy copy of this decision will be mailed to the address noted on the request to withdraw. If this firm desires to receive future correspondence regarding this application, the proper power of attorney documents must be submitted.

Applicant is reminded that there is no attorney of record at this time.

A non-final rejection was mailed on October 31, 2007. Failure to timely reply will result in the abandonment of this application.

Telephone inquires concerning this decision should be directed to Kimberly Inabinet at 571-272-4618.

Kimberly Inabinet
Petitions Examiner
Office of Petitions

cc: Ophir Rachman
2595 East Bayshore Road
Palo Alto, CA 94303

cc: Jordan M. Becker, Esq.
Perkins Coie
101 Jefferson Drive
Menlo Park, CA 94025-1114

UNITED STATES PATENT AND TRADEMARK OFFICE

UNITED STATES DEPARTMENT OF COMMERCE
United States Patent and Trademark Office
Address: COMMISSIONER FOR PATENTS
P.O. Box 1450
Alexandria, Virginia 22313-1450
www.uspto.gov

APPLICATION NUMBER	FILING OR 371(C) DATE	FIRST NAMED APPLICANT	ATTY. DOCKET NO./TITLE
10/646,416	08/21/2003	Ophir Rachman	6599P011

CONFIRMATION NO. 9242

POWER OF ATTORNEY NOTICE

8791
BLAKELY SOKOLOFF TAYLOR & ZAFMAN
1279 OAKMEAD PARKWAY
SUNNYVALE, CA 94085-4040

Date Mailed: 02/13/2008

NOTICE REGARDING CHANGE OF POWER OF ATTORNEY

This is in response to the Power of Attorney filed 01/22/2008.

- The withdrawal as attorney in this application has been accepted. Future correspondence will be mailed to the new address of record. 37 CFR 1.33.

/kainabinet/

Office of Initial Patent Examination (571) 272-4000 or 1-800-PTO-9199

UNITED STATES PATENT AND TRADEMARK OFFICE

COMMISSIONER FOR PATENTS
UNITED STATES PATENT AND TRADEMARK OFFICE
P.O. BOX 1450
ALEXANDRIA, VA 22313-1450
www.uspto.gov

TRASK BRITT
P.O. BOX 2550
SALT LAKE CITY, UT 84110

COPY MAILED

JAN 31 2006

OFFICE OF PETITIONS

In re Application of :
David J. Corisis, et al. :
Application No. 10/646,420 : ON PETITION
Filed: August 22, 2003 :
Attorney Docket No.: 2269-4814.1US (01-0040.01 :
:

This is a decision on the petition, filed January 30, 2006, under 37 CFR 1.313(c)(2) to withdraw the above-identified application from issue after payment of the issue fee.

The petition is **GRANTED**.

The above-identified application is withdrawn from issue for consideration of a submission under 37 CFR 1.114 (request for continued examination). See 37 CFR 1.313(c)(2).

Petitioner is advised that the issue fee paid on November 25, 2005, in the above-identified application cannot be refunded. If, however, the above-identified application is again allowed, petitioner may request that it be applied towards the issue fee required by the new Notice of Allowance. [1]

Telephone inquiries relating to this decision should be directed to the undersigned at (571) 272-3204.

The application is being referred to Technology Center AU 2891 for further processing of the request for continued examination under 37 CFR 1.114.

Sherry D. Brinkley
Petitions Examiner
Office of Petitions

[1]The request to apply the issue fee to the new Notice may be satisfied by completing and returning the new Issue Fee Transmittal Form PTOL-85(b), which includes the following language thereon: "Commissioner for Patents is requested to apply the Issue Fee and Publication Fee (if any) or re-apply any previously paid issue fee to the application identified above." Petitioner is advised that, whether a fee is indicated as being due or not, the Issue Fee Transmittal Form **must** be completed and timely submitted to avoid abandonment. Note the language in bold text on the first page of the Notice of Allowance and Fee(s) Due (PTOL-85).

UNITED STATES PATENT AND TRADEMARK OFFICE

COMMISSIONER FOR PATENTS
UNITED STATES PATENT AND TRADEMARK OFFICE
P.O. BOX 1450
ALEXANDRIA, VA 22313-1450
www.uspto.gov

TIPTON L. RANDALL
19371 55TH AVENUE
CHIPPEWA FALLS, WI 54729-9272

COPY MAILED

OCT 04 2007

OFFICE OF PETITIONS

In re Application of :
Donald Ole Johnson :
Application No. 10/646,427 : DECISION ON PETITION
Filed: August 21, 2003 :
Attorney Docket No. TLR-5231US :

This is a decision on the petition under the unintentional provisions of 37 CFR 1.137(b), filed March 27, 2007, to revive the above-identified application.

The petition is **DISMISSED**.

Any request for reconsideration of this decision must be submitted within TWO (2) MONTHS from the mail date of this decision. Extensions of time under 37 CFR 1.136(a) are permitted. The reconsideration request should include a cover letter entitled "Renewed Petition under 37 CFR 1.137(b)." This is **not** a final agency action within the meaning of 5 U.S.C. § 704.

The application became abandoned for a failure to respond to a Notice of Non-Compliant Amendment mailed October 15, 2004, which set a time period for reply of one (1) month. No extension of time under the provisions of 37 CFR 1.136(a) was obtained. Accordingly, the application became abandoned on November 16, 2004.

A grantable petition under 37 CFR 1.137(b) must be accompanied by: (1) the required reply, unless previously filed; (2) the petition fee as set forth in 37 CFR 1.17(m); (3) a statement that the entire delay in filing the required reply from the due date for the reply until the filing of a grantable petition pursuant to 37 CFR 1.137(b) was unintentional; and (4) any terminal disclaimer (and fee as set forth in 37 CFR 1.20(d)) required by 37 CFR 1.137(d). Where there is a question as to whether either the abandonment or the delay in filing a petition under 37 CFR 1.137 was unintentional, the Director may require additional information. *See* MPEP 711.03(c)(II)(C) and (D). The instant petition lacks item (3).

There are three periods to be considered during the evaluation of a petition under 37 CFR 1.137(b):

(1) the delay in reply that originally resulted in the abandonment;

(2) the delay in filing an initial petition pursuant to 37 CFR 1.137(b) to revive the application; and

(3) the delay in filing a grantable petition pursuant to 37 CFR 1.137(b) to revive the application.

Currently, the delay has not been shown to the satisfaction of the Director to be unintentional for periods (1) and (2).

As to Period (1):

The patent statute at 35 U.S.C. § 41(a)(7) authorizes the Director to revive an "unintentionally abandoned application." The legislative history of Public Law 97-247 reveals that the purpose of 35 U.S.C. § 41(a)(7) is to permit the Office to have more discretion than in 35 U.S.C. §§ 133 or 151 to revive abandoned applications in appropriate circumstances, but places a limit on this discretion, stating that "[u]nder this section a petition accompanied by either a fee of $500 or a fee of $50 **would not be granted where the abandonment** or the failure to pay the fee for issuing the patent **was intentional** as opposed to being unintentional or unavoidable." [emphasis added]. See H.R. Rep. No. 542, 97th Cong., 2d Sess. 6-7 (1982), *reprinted in* 1982 U.S.C.C.A.N. 770-71. The revival of an intentionally abandoned application is antithetical to the meaning and intent of the statute and regulation.

35 U.S.C. § 41(a)(7) authorizes the Director to accept a petition "for the revival of an unintentionally abandoned application for a patent." As amended December 1, 1997, 37 CFR 1.137(b)(3) provides that a petition under 37 CFR 1.137(b) must be accompanied by a statement that the delay was unintentional, but provides that "[t]he Commissioner may require additional information where there is a question whether the delay was unintentional." Where, as here, there is a question whether the initial delay was unintentional, the petitioner must meet the burden of establishing that the delay was unintentional within the meaning of 35 U.S.C. § 41(a)(7) and 37 CFR 1.137(b). *See* In re Application of G, 11 USPQ2d 1378, 1380 (Comm'r Pats. 1989); 37 CFR 1.137(b). Here, in view of the inordinate delay (over two

years) in resuming prosecution, there is a question whether the entire delay was unintentional. Petitioner should note that the issue is not whether some of the delay was unintentional by any party; rather, the issue is whether the entire delay has been shown to the satisfaction of the Director to be unintentional.

The question under 37 CFR 1.137(b) for period (1) is whether the delay on the part of the party having the right or authority to reply to avoid abandonment (or not reply) was unintentional. Accordingly, any renewed petition must clearly identify the party having the right to reply to avoid abandonment on November 16, 2004. That party, in turn must explain what effort(s) was made to further reply to the outstanding Office action and, further, why no reply was filed. If no effort was made to further reply, then that party must explain why the delay in this application does not result from a deliberate course of action (or inaction). As the courts have made clear, it is pointless for the USPTO to revive a long abandoned application without an adequate showing that the delay did not result from a deliberate course of action. *See* Lawman Armor v. Simon, 2005 U.S. Dist. LEXIS 10843, 74 USPQ2d 1633 (DC EMich 2005); Field Hybrids, LLC v. Toyota Motor Corp., 2005 U.S. Dist. LEXIS 1159 (D. Minn Jan. 27, 2005); Lumenyte Int'l Corp. v. Cable Lite Corp., Nos. 96-1011, 96-1077, 1996 U.S. App. LEXIS 16400, 1996 WL 383927 (Fed. Cir. July 9, 1996) (unpublished) (patents held unenforceable due to a finding of inequitable conduct in submitting an inappropriate statement that the abandonment was unintentional).

As to Period (2):

Likewise, where the applicant deliberately chooses not to seek or persist in seeking the revival of an abandoned application, or where the applicant deliberately chooses to delay seeking the revival of an abandoned application, the resulting delay in seeking revival of the abandoned application cannot be considered as "unintentional" within the meaning of 37 CFR 1.137(b). *See* MPEP 711.03(c).

The language of both 35 U.S.C. § 41(a)(7) and 37 CFR 1.137(b) are clear and unambiguous, and, furthermore, without qualification. That is, the delay in filing the reply during prosecution, as well as in filing the petition seeking revival, must have been, without qualification, "unintentional" for the reply to now be accepted on petition. The Office requires that the entire delay be at least unintentional as a prerequisite to revival of an abandoned application to prevent abuse and injury to the public. *See* H.R. Rep. No. 542, 97th Cong., 2d Sess. 7 (1982), reprinted

in 1982 U.S.C.C.A.N. 771 ("[i]n order to prevent abuse and injury to the public the Commissioner . . . could require applicants to act promptly after becoming aware of the abandonment"). The December 1997 change to 37 CFR 1.137 did not create any new right to overcome an intentional delay in seeking revival, or in renewing an attempt at seeking revival, of an abandoned application. *See* Changes to Patent Practice and Procedure; Final Rule Notice, 62 Fed. Reg. 53131, 53160 (October 10, 1997), 1203 Off. Gaz. Pat. Office 63, 87 (October 21, 1997), which clearly stated that any protracted delay (here, over two years) could trigger, as here, a request for additional information. As the courts have since made clear, a protracted delay in seeking revival, as here, requires a petitioner's detailed explanation seeking to excuse the delay as opposed to USPTO acceptance of a general allegation of unintentional delay. *See* Lawman Armor v. Simon, 2005 U.S. Dist. LEXIS 10843, 74 USPQ2d 1633, at 1637-8 (DC EMich 2005); Field Hybrids, LLC v. Toyota Motor Corp., 2005 U.S. Dist. LEXIS 1159 (D. Minn Jan. 27, 2005) at *21-*23. Statements are required from any responsible person(s) having firsthand knowledge of the circumstances surrounding the protracted delay, after the abandonment date, in seeking revival.

As noted in MPEP 711.03(c)(II), subsection D, in instances in which such petition was not filed within 1 year of the date of abandonment of the application, applicants should include:

> (A) the date that the applicant first became aware of the abandonment of the application; and
> (B) a showing as to how the delay in discovering the abandoned status of the application occurred despite the exercise of due care or diligence on the part of the applicant.

In either instance, applicant's failure to carry the burden of proof to establish that the "entire" delay was "unavoidable" or "unintentional" may lead to the denial of a petition under 37 CFR 1.137(b), regardless of the circumstances that originally resulted in the abandonment of the application. *See also* New York University v. Autodesk, 2007 U.S. DIST LEXIS, U.S.District LEXIS 50832, *10 -*12 (S.D.N.Y. 2007)(protracted delay in seeking revival undercuts assertion of unintentional delay).

Any renewed petition may be addressed as follows:

By Mail: Mail Stop PETITION
Commissioner for Patents
P. O. Box 1450

Alexandria, VA 22313-1450

By hand: U. S. Patent and Trademark Office
Customer Service Window, Mail Stop Petitions
Randolph Building
401 Dulany Street
Alexandria, VA 22314

The centralized facsimile number is **(571) 273-8300.**

Correspondence regarding this decision may also be filed through the electronic filing system of the USPTO. In this case, petitioner may wish to contact the undersigned regarding the filing of the renewed petition under 37 CFR 1.137(b).

Telephone inquiries concerning this decision should be directed to the undersigned at (571) 272-3204.

Sherry D. Brinkley
Petitions Examiner
Office of Petitions

UNITED STATES PATENT AND TRADEMARK OFFICE

COMMISSIONER FOR PATENTS
UNITED STATES PATENT AND TRADEMARK OFFICE
P.O. BOX 1450
ALEXANDRIA, VA 22313-1450
www.uspto.gov

TIPTON L. RANDALL
19371 55TH AVENUE
CHIPPEWA FALLS WI 54729-9272

COPY MAILED

APR 0 3 2008

OFFICE OF PETITIONS

In re Application of :
Donald Ole Johnson :
Application No. 10/646,427 : ON PETITION
Filed: November 21, 2003 :
Attorney Docket No. TLR-5231US :

This is a decision in response to the renewed petition, filed December 3, 2007, to revive the above-identified application under the provisions of 37 CFR 1.137(b).

The petition is **DISMISSED**.

A grantable petition under 37 CFR 1.137(b)[1] must be accompanied by: (1) the required reply,[2] unless previously filed; (2) the petition fee as set forth in 37 CFR 1.17(m); (3) a statement that the entire delay in filing the required reply from the due date for the reply until the filing of a grantable petition pursuant to 37 CFR 1.137(b) was unintentional; and (4) any terminal disclaimer (and fee as set forth in 37 CFR 1.20(d)) required by 37 CFR 1.137(c). Where there is a question as to whether either the abandonment or the delay in filing a petition under 37 CFR 1.137 was unintentional, the Director may require additional information. See MPEP 711.03(c)(II)(C) and (D).

Again, the petition does not comply with item (3) above. In this regard, petitioner asserts his inexperience in these matters and his financial inability to employ the services of patent counsel to aid in preparing a timely reply to the outstanding Office action of October 15, 2004 resulted in the delay.

The record discloses that petitioner herein was prosecuting his own application. While resources would have been necessary to employ the assistance of counsel in continuing the prosecution of the above-identified application, persons seeking patent rights have no "right" to the assistance of counsel during the application process. Boyden v. Commissioner of Patents, 441 F.2d 1041, 168 USPQ 680 (D.C. Cir. 1971). As patent applications are commonly prosecuted *pro se*, arguments that the financial inability to employ counsel to aid in the prosecution of an application rendered

[1] As amended effective December 1, 1997. See Changes to Patent Practice and Procedure; Final Rule Notice, 62 Fed. Reg. 53131, 53194-95 (October 10, 1997), 1203 Off. Gaz. Pat. Office 63, 119-20 (October 21, 1997).

[2] In a nonprovisional application abandoned for failure to prosecute, the required reply may be met by the filing of a continuing application. In an application or patent, abandoned or lapsed for failure to pay the issue fee or any portion thereof, the required reply must be the payment of the issue fee or any outstanding balance thereof.

the abandonment of the application "unintentional" are unpersuasive. That is, while applicants may obtain the services of counsel to assist in the application process, such counsel is not strictly necessary, and, as such, the lack of knowledge or the financial inability to employ a counsel does not excuse a delay in providing a required response to an Office action.

The evidence is also insufficient to establish financial difficulties as they relate to the delay in filing the initial petition from November 16, 2004 until the filing of the initial petition on March 27, 2007. In fact, there is no showing to support petitioner's allegation of his financial difficulties.

In view of the above, the petition cannot be granted.

This decision is made without prejudice to reconsideration. However, any request for reconsideration must be submitted within TWO (2) MONTHS from the mail date of this decision. Extensions of time under 37 CFR 1.136(a) are permitted. The reconsideration request should include a cover letter entitled "Renewed Petition under 37 CFR 1.137(b)."

Petition is cautioned to avoid submitting personal information in documents filed in a patent application that may contribute to identity theft. Personal information such as social security numbers, bank account numbers, or credit card numbers (other than a check or credit card authorization form PTO-2038 submitted for payment purposes) is never required by the USPTO to support a petition or an application. If this type of personal information is included in documents submitted to the USPTO, petitioner should consider redacting such personal information from the documents before submitting them to the USPTO. Petitioner is advised that the record of a patent application is available to the public after publication of the application (unless a non-publication request in compliance with 37 CFR 1.213(a) is made in the application) or issuance of a patent. Furthermore, the record from an abandoned application may also be available to the public if the application is referenced in a published application or an issued patent (see 37 CFR 1.14). Checks and credit card authorization forms PTO-2038 submitted for payment purposes are not retained in the application file and therefore are not publicly available.

Further correspondence with respect to this matter should be addressed as follows:

By mail:
Mail Stop PETITION
Commissioner for Patents
Post Office Box 1450
Alexandria, VA 22313-1450

By hand:
U.S. Patent and Trademark Office
Customer Service Window, Mail Stop PETITION
Randolph Building
401 Dulany Street
Alexandria, VA 22314

The centralized facsimile number is **(571) 273-8300**.

Any questions concerning this matter may be directed to the undersigned at (571) 272-3204.

Sherry D. Brinkley
Petitions Examiner
Office of Petitions

UNITED STATES PATENT AND TRADEMARK OFFICE

Commissioner for Patents
United States Patent and Trademark Office
P.O. Box 1450
Alexandria, VA 22313-1450
www.uspto.gov

Marina Larson & Associates, LLC
P.O. BOX 4928
DILLON CO 80435

COPY MAILED

NOV 1 8 2008

OFFICE OF PETITIONS

In re Application of :
Martin Gleave et al. :
Application No. 10/646,436 : ON PETITION
Filed: August 21, 2003 :
Attorney Docket No.UBC.P-030 :

This is a decision on the petition under the unintentional provisions of 37 CFR 1.137(b), filed September 29, 2008, to revive the above-identified application.

The petition is **GRANTED**.

This application became abandoned as a result of petitioner's failure to take appropriate action in a timely manner after the decision of April 22, 2008 by the Board of Patent Appeals and Interferences. Therefore, the proceedings as to the rejected claims were terminated. *See* 37 CFR 1.197(b). As no claim was allowed, the application became abandoned on June 23, 2008. *See* MPEP 1214.06.

The petition satisfies the requirements of 37 CFR 1.137(b) in that petitioner has supplied (1) the reply in the form of a Request for Continued Examination (RCE) and fee of $405.00, and the submission required by 37 CFR 1.114; (2) the petition fee of $770.00; and (3) a proper statement of unintentional delay.

Telephone inquiries concerning this decision should be directed to JoAnne Burke at (571) 272-4584 .

This application is being referred to Technology Center AU 1635 for processing of the RCE and for appropriate action by the Examiner in the normal course of business on the amendment submitted in accordance with 37 CFR 1.114.

Ramesh Krishnamurthy
Petitions Examiner
Office of Petitions

PTO/SB/64 (08-08)
Approved for use through 09/30/2008. OMB 0651-0031
U.S. Patent and Trademark Office; U.S. DEPARTMENT OF COMMERCE
Under the Paperwork Reduction Act of 1995, no persons are required to respond to a collection of information unless it displays a valid OMB control number.

PETITION FOR REVIVAL OF AN APPLICATION FOR PATENT ABANDONED UNINTENTIONALLY UNDER 37 CFR 1.137(b)

Docket Number (Optional): UBC.P-030

First named inventor: Gleave et al.

Application No.: 10/646,436 Art Unit: 1635

Filed: 8/21/2003 Examiner: Chong

Title: RNAi Probes targeting Cancer-Related Proteins

Attention: Office of Petitions
Mail Stop Petition
Commissioner for Patents
P.O. Box 1450
Alexandria, VA 22313-1450
FAX (571) 273-8300

NOTE: If information or assistance is needed in completing this form, please contact Petitions Information at (571) 272-3282.

The above-identified application became abandoned for failure to file a timely and proper reply to a notice or action by the United States Patent and Trademark Office. The date of abandonment is the day after the expiration date of the period set for reply in the office notice or action plus an extensions of time actually obtained.

APPLICANT HEREBY PETITIONS FOR REVIVAL OF THIS APPLICATION

NOTE: A grantable petition requires the following items:
(1) Petition fee;
(2) Reply and/or issue fee;
(3) Terminal disclaimer with disclaimer fee - required for all utility and plant applications filed before June 8, 1995; and for all design applications; and
(4) Statement that the entire delay was unintentional.

1.Petition fee

☑ Small entity-fee $ 770.00 (37 CFR 1.17(m)). Applicant claims small entity status. See 37 CFR 1.27.

☐ Other than small entity – fee $ _____ (37 CFR 1.17(m))

2. Reply and/or fee

A. The reply and/or fee to the above-noted Office action in the form of amendment after decision on appeal (identify type of reply):

☑ has been filed previously on May 2, 2008.
☐ is enclosed herewith.

B. The issue fee and publication fee (if applicable) of $ _____.

☐ has been paid previously on _____.
☐ is enclosed herewith.

This collection of information is required by 37 CFR 1.137(b). The information is required to obtain or retain a benefit by the public which is to file (and by the USPTO to process) an application. Confidentiality is governed by 35 U.S.C. 122 and 37 CFR 1.11 and 1.14. This collection is estimated to take 1.0 hour to complete, including gathering, preparing, and submitting the completed application form to the USPTO. Time will vary depending upon the individual case. Any comments on the amount of time you require to complete this form and/or suggestions for reducing this burden, should be sent to the Chief Information Officer, U.S. Patent and Trademark Office, U.S. Department of Commerce, P.O. Box 1450, Alexandria, VA 22313-1450. DO NOT SEND FEES OR COMPLETED FORMS TO THIS ADDRESS. **SEND TO: Mail Stop Petition, Commissioner for Patents, P.O. Box 1450, Alexandria, VA 22313-1450.**

If you need assistance in completing the form, call 1-800-PTO-9199 and select option 2.

3. Terminal disclaimer with disclaimer fee

☑ Since this utility/plant application was filed on or after June 8, 1995, no terminal disclaimer is required.

☐ A terminal disclaimer (and disclaimer fee (37 CFR 1.20(d)) of $ _____ for a small entity or $ _____ for other than a small entity) disclaiming the required period of time is enclosed herewith (see PTO/SB/63).

4. STATEMENT: The entire delay in filing the required reply from the due date for the required reply until the filing of a grantable petition under 37 CFR 1.137(b) was unintentional. [NOTE: The United States Patent and Trademark Office may require additional information if there is a question as to whether either the abandonment or the delay in filing a petition under 37 CFR 1.137(b) was unintentional (MPEP 711.03(c), subsections (III)(C) and (D)).]

WARNING:

Petitioner/applicant is cautioned to avoid submitting personal information in documents filed in a patent application that may contribute to identity theft. Personal information such as social security numbers, bank account numbers, or credit card numbers (other than a check or credit card authorization form PTO-2038 submitted for payment purposes) is never required by the USPTO to support a petition or an application. If this type of personal information is included in documents submitted to the USPTO, petitioners/applicants should consider redacting such personal information from the documents before submitting them to the USPTO. Petitioner/applicant is advised that the record of a patent application is available to the public after publication of the application (unless a non-publication request in compliance with 37 CFR 1.213(a) is made in the application) or issuance of a patent. Furthermore, the record from an abandoned application may also be available to the public if the application is referenced in a published application or an issued patent (see 37 CFR 1.14). Checks and credit card authorization forms PTO-2038 submitted for payment purposes are not retained in the application file and therefore are not publicly available.

/marina/	9/28/2008
Signature	Date
Marina T. Larson	32,038
Typed or printed name	Registration Number, if applicable
PO Box 4928	970 262 1800
Address	Telephone Number
Dillon, CO 80435	
Address	

Enclosures:
☑ Fee Payment
☐ Reply
☐ Terminal Disclaimer Form
☐ Additional sheets containing statements establishing unintentional delay
☑ Other: Request for Continuing Examination

CERTIFICATE OF MAILING OR TRANSMISSION [37 CFR 1.8(a)]

I hereby certify that this correspondence is being:

☐ Deposited with the United States Postal Service on the date shown below with sufficient postage as first class mail in an envelope addressed to: Mail Stop Petition, Commissioner for Patents, P. O. Box 1450, Alexandria, VA 22313-1450.

☐ Transmitted by facsimile on the date shown below to the United States Patent and Trademark Office at (571) 273-8300.

Date	Signature
	Typed or printed name of person signing certificate

UNITED STATES PATENT AND TRADEMARK OFFICE

Commissioner for Patents
United States Patent and Trademark Office
P.O. Box 1450
Alexandria, VA 22313-1450
www.uspto.gov

INTEL CORPORATION
c/o INTELLEVATE, LLC
P.O. BOX 52050
MINNEAPOLIS MN 55402

COPY MAILED

SEP 0 8 2008

In re Application of :
Gregory A. Peek et al. :
Application No. 10/646,448 : DECISION ON PETITION
Filed: August 22, 2003 :
Attorney Docket No. P16158 :

This is a decision on the petition under the unintentional provisions of 37 CFR 1.137(b), filed January 11, 2008, to revive the above-identified application.

The petition is **GRANTED**.

This application became abandoned for failure to timely pay the issue and publication fees on or before August 14, 2007, as required by the Notice of Allowance and Fee(s) Due, mailed May 14, 2007. Accordingly, the date of abandonment of this application is August 15, 2007.

The petition satisfies the requirements of 37 CFR 1.137(b) in that petitioner has supplied (1) the reply in the form of payment of the issue fee of $1440.00 and the publication fee of $300.00, (2) the petition fee of $1540.00; and (3) a proper statement of unintentional delay.

It is not apparent whether the statement of unintentional delay was signed by a person who would have been in a position of knowing that the entire delay in filing the required reply from the due date for the reply until the filing of a grantable petition pursuant to 37 CFR 1.137(b) was unintentional. Nevertheless, in accordance with 37 CFR 10.18, the statement is accepted as constituting a certification of unintentional delay. However, in the event that petitioner has no knowledge that the delay was unintentional, petitioner must make such an inquiry to ascertain that, in fact, the delay was unintentional. If petitioner discovers that the delay was intentional, petitioner must so notify the Office.

The Revocation Power of Attorney submitted with the petition on January 11, 2008, is not accepted. The Revocation Power of Attorney was sign by Pam J. Matlock, acting on behalf of Intel Corporation. However, the Revocation and Power of Attorney does not comply with 37 CFR 3.73(b) it does not state its title in which the person who signed is authorized to act on behalf of the assignee, applicant, nor the attorney (*See* 37 CFR 3.73(b)). In accordance with 37 CFR 1.34(a), the signature appearing on the petition shall constitute a representation to the United States Patent and Trademark Office that he/she is authorized to represent the particular party in whose behalf he/she acts. However, if petitioner desires to receive future correspondence regarding this application, the appropriate power of attorney or authorization of agent must be submitted. Nevertheless, all future correspondence regarding this application file will be directed solely to the address of record until otherwise instructed. A copy of a blank 3.73(b) Certificate is enclosed with this decision.

Telephone inquiries concerning this decision should be directed to JoAnne Burke at (571) 272-4584.

This application is being referred to the Office of Data Management for processing into a patent.

Irvin Dingle
Petitions Examiner
Office of Petitions

Attachments: Blank 37 CFR 3.73(b) Certificate

PTO/SB/96 (08-08)
Approved for use through 08/31/2008. OMB 0651-0031
U.S. Patent and Trademark Office; U.S. DEPARTMENT OF COMMERCE
Under the Paperwork Reduction Act of 1995, no persons are required to respond to a collection of information unless it displays a valid OMB control number.

STATEMENT UNDER 37 CFR 3.73(b)

Applicant/Patent Owner: _____

Application No./Patent No.: _____ Filed/Issue Date: _____

Entitled:

_____, a _____
(Name of Assignee) (Type of Assignee, e.g., corporation, partnership, university, government agency, etc.)

states that it is:

1. ☐ the assignee of the entire right, title, and interest; or

2. ☐ an assignee of less than the entire right, title and interest
(The extent (by percentage) of its ownership interest is _____%)

in the patent application/patent identified above by virtue of either:

A. ☐ An assignment from the inventor(s) of the patent application/patent identified above. The assignment was recorded in the United States Patent and Trademark Office at Reel _____, Frame _____, or for which a copy thereof is attached.

OR

B. ☐ A chain of title from the inventor(s), of the patent application/patent identified above, to the current assignee as follows:

1. From: _____ To: _____
The document was recorded in the United States Patent and Trademark Office at
Reel _____, Frame _____, or for which a copy thereof is attached.

2. From: _____ To: _____
The document was recorded in the United States Patent and Trademark Office at
Reel _____, Frame _____, or for which a copy thereof is attached.

3. From: _____ To: _____
The document was recorded in the United States Patent and Trademark Office at
Reel _____, Frame _____, or for which a copy thereof is attached.

☐ Additional documents in the chain of title are listed on a supplemental sheet.

☐ As required by 37 CFR 3.73(b)(1)(i), the documentary evidence of the chain of title from the original owner to the assignee was, or concurrently is being, submitted for recordation pursuant to 37 CFR 3.11.

[NOTE: A separate copy (*i.e.*, a true copy of the original assignment document(s)) must be submitted to Assignment Division in accordance with 37 CFR Part 3, to record the assignment in the records of the USPTO. See MPEP 302.08]

The undersigned (whose title is supplied below) is authorized to act on behalf of the assignee.

_____ _____
Signature Date

_____ _____
Printed or Typed Name Telephone Number

_____
Title

This collection of information is required by 37 CFR 3.73(b). The information is required to obtain or retain a benefit by the public which is to file (and by the USPTO to process) an application. Confidentiality is governed by 35 U.S.C. 122 and 37 CFR 1.11 and 1.14. This collection is estimated to take 12 minutes to complete, including gathering, preparing, and submitting the completed application form to the USPTO. Time will vary depending upon the individual case. Any comments on the amount of time you require to complete this form and/or suggestions for reducing this burden, should be sent to the Chief Information Officer, U.S. Patent and Trademark Office, U.S. Department of Commerce, P.O. Box 1450, Alexandria, VA 22313-1450. DO NOT SEND FEES OR COMPLETED FORMS TO THIS ADDRESS. **SEND TO: Commissioner for Patents, P.O. Box 1450, Alexandria, VA 22313-1450.**

If you need assistance in completing the form, call 1-800-PTO-9199 and select option 2.

Privacy Act Statement

The **Privacy Act of 1974 (P.L. 93-579)** requires that you be given certain information in connection with your submission of the attached form related to a patent application or patent. Accordingly, pursuant to the requirements of the Act, please be advised that: (1) the general authority for the collection of this information is 35 U.S.C. 2(b)(2); (2) furnishing of the information solicited is voluntary; and (3) the principal purpose for which the information is used by the U.S. Patent and Trademark Office is to process and/or examine your submission related to a patent application or patent. If you do not furnish the requested information, the U.S. Patent and Trademark Office may not be able to process and/or examine your submission, which may result in termination of proceedings or abandonment of the application or expiration of the patent.

The information provided by you in this form will be subject to the following routine uses:

1. The information on this form will be treated confidentially to the extent allowed under the Freedom of Information Act (5 U.S.C. 552) and the Privacy Act (5 U.S.C 552a). Records from this system of records may be disclosed to the Department of Justice to determine whether disclosure of these records is required by the Freedom of Information Act.
2. A record from this system of records may be disclosed, as a routine use, in the course of presenting evidence to a court, magistrate, or administrative tribunal, including disclosures to opposing counsel in the course of settlement negotiations.
3. A record in this system of records may be disclosed, as a routine use, to a Member of Congress submitting a request involving an individual, to whom the record pertains, when the individual has requested assistance from the Member with respect to the subject matter of the record.
4. A record in this system of records may be disclosed, as a routine use, to a contractor of the Agency having need for the information in order to perform a contract. Recipients of information shall be required to comply with the requirements of the Privacy Act of 1974, as amended, pursuant to 5 U.S.C. 552a(m).
5. A record related to an International Application filed under the Patent Cooperation Treaty in this system of records may be disclosed, as a routine use, to the International Bureau of the World Intellectual Property Organization, pursuant to the Patent Cooperation Treaty.
6. A record in this system of records may be disclosed, as a routine use, to another federal agency for purposes of National Security review (35 U.S.C. 181) and for review pursuant to the Atomic Energy Act (42 U.S.C. 218(c)).
7. A record from this system of records may be disclosed, as a routine use, to the Administrator, General Services, or his/her designee, during an inspection of records conducted by GSA as part of that agency's responsibility to recommend improvements in records management practices and programs, under authority of 44 U.S.C. 2904 and 2906. Such disclosure shall be made in accordance with the GSA regulations governing inspection of records for this purpose, and any other relevant (*i.e.*, GSA or Commerce) directive. Such disclosure shall not be used to make determinations about individuals.
8. A record from this system of records may be disclosed, as a routine use, to the public after either publication of the application pursuant to 35 U.S.C. 122(b) or issuance of a patent pursuant to 35 U.S.C. 151. Further, a record may be disclosed, subject to the limitations of 37 CFR 1.14, as a routine use, to the public if the record was filed in an application which became abandoned or in which the proceedings were terminated and which application is referenced by either a published application, an application open to public inspection or an issued patent.
9. A record from this system of records may be disclosed, as a routine use, to a Federal, State, or local law enforcement agency, if the USPTO becomes aware of a violation or potential violation of law or regulation.

SPE RESPONSE FOR CERTIFICATE OF CORRECTION

Paper No.: _____

DATE : Oct. 13, 2005

TO SPE OF : ART UNIT 1624 (*Exr. is Kahsay Habte*)

SUBJECT : Request for Certificate of Correction on Patent No.: 6,806,366

A response is requested with respect to the accompanying request for a certificate of correction.

Please complete this form and return with file, within 7 days to:
Palm location 7580, Certificates of Correction Branch – South Tower – 9A22
If response is for an IFW, **return to employee (named below) via PUBSCofC Team in MADRAS.**

With respect to the change(s) requested, correcting Office and/or Applicant's errors, should the patent read as shown in the certificate of correction (COCIN)? No new matter should be introduced, nor should the scope or meaning of the claims be changed.

Please see the Invtr. Petition / spec. changes / claim changes. Your denial or approval decision is needed below.

sp

Thank You For Your Assistance

Certificates of Correction Branch
Tel. No. 703-308-9390 x120

The request for issuing the above-identified correction(s) is hereby:
Note your decision on the appropriate box.

☒ **Approved**	**All** changes apply.
☐ **Approved in Part**	Specify below which changes **do not** apply.
☐ **Denied**	State the reasons for denial below.

Comments:

_____

_____

_____

_____

_____

SPE 1624

1624
Art Unit

UNITED STATES PATENT AND TRADEMARK OFFICE

Commissioner for Patents
United States Patent and Trademark Office
P.O. Box 1450
Alexandria, VA 22313-1450
www.uspto.gov

BAKER & MCKENZIE LLP
130 E. RANDOLPH DRIVE
CHICAGO IL 60601

COPY MAILED
NOV 1 3 2006
OFFICE OF PETITIONS

In re Application of	:	
Choi et al.	:	DECISION ON
Application No.: 10/646,499	:	
Filing Date: August 22, 2003	:	PETITION UNDER
Docket No.: 217 P 927	:	
For: Floor Assembly For Grill	:	37 CFR 1.137(b)

This is a decision on Petition Under 37 CFR 1.137(b), filed on August 4, 2006.

The petition is **GRANTED**.

The above-identified application became abandoned for failure to file a timely and proper reply to the non-final Office action mailed April 22, 2005, which set a shortened statutory period for reply of three (3) months. The application went abandoned at midnight on October 24, 2005 (since October 22, 2005 was a Saturday). A Notice of Abandonment was mailed on June 9, 2005.

Petitioner has met the requirements for revival under §1.137(b). Petitioner submitted the required reply in the form of an amendment, paid the petition fee and made the statement that "the entire delay in filing the required reply from the due date for the required reply until the filing of a grantable petition under 37 CFR 1.137(b) was unintentional." Since this utility application was filed after June 8, 1995, no terminal disclaimer is required. Accordingly, the petition is granted under §1.137(b).

This application is being referred to Technology Center 3634 for continued processing.

George M. Dombroske
PCT Legal Examiner
Office of PCT Legal Administration
on behalf of
Office of Petitions
Telephone: 571-272-3283
Facsimile: 571-273-0459

UNITED STATES PATENT AND TRADEMARK OFFICE

1775

Commissioner for Patents
United States Patent and Trademark Office
P.O. Box 1450
Alexandria, VA 22313-1450
www.uspto.gov

Myers Bigel Sibley & Sajovec
PO Box 37428
Raleigh NC 27627

COPY MAILED

JAN 2 3 2004

OFFICE OF PETITIONS

In re Application of
Tsumori et al.
Application No. 10/646,500
Filed: August 22, 2003
Attorney Docket No. 5576-150

DECISION ON PETITION

This is a decision on the petition under 37 CFR 1.10, filed November 28, 2003, requesting that the above-identified application be accorded a filing date of August 22, 2003, rather than the presently accorded filing date of August 25, 2003.

Petitioner alleges that the application was deposited in Express Mail service on August 22, 2003. In support of the allegation, the petition is accompanied by a copy of Express Mail label No. EV353592025US The "date-in" on the Express Mail label is blank; however, the label contains a United States Postal Service (USPS) stamp of August 22, 2003. The same Express Mail label number was placed on the original application papers located in the official file.

In view of the above, the petition is **granted**. No petition fee is necessary.

The Office of Initial Patent Examination is directed to correct the filing date to August 22, 2003, and to mail a corrected filing receipt.

Telephone inquiries should be directed to the undersigned at (703) 306-5589.

Christina Tartera Donnell

Christina Tartera Donnell
Senior Petitions Attorney
Office of Petitions

UNITED STATES PATENT AND TRADEMARK OFFICE

Commissioner for Patents
United States Patent and Trademark Office
P.O. Box 1450
Alexandria, VA 22313-1450
www.uspto.gov
DIW Feb-07

MARSHALL, GERSTEIN & BORUN LLP
233 S. WACKER DRIVE, SUITE 6300
SEARS TOWER
CHICAGO IL 60606

COPY MAILED

MAR 0 1 2007

OFFICE OF PETITIONS

In re Patent No. 7,121,992	:	
Issued: 17 October, 2006	:	
Application No. 10/646,514	:	ON PETITION
Filed: 22 August, 2003	:	
Attorney Docket Number:	:	
28363/36886A	:	

This is in response to the deficiency fee payment filed pursuant to 37 CFR 1.28(c) on 6 November, 2006.

37 CFR 1.28(c) states, "The deficiency is based on the amount of the fee, for other than a small entity, in effect at the time the deficiency is paid in full."

The Office no longer investigates or rejects original or reissue applications under 37 CFR 1.56. **1098 Off. Gaz. Pat. Office 502 (January 3, 1989)**. Therefore, nothing in this Notice is intended to imply that an investigation was done.

Your fee deficiency submission under 37 CFR 1.28 is hereby **ACCEPTED**.

Small entity status will no longer apply.

Telephone inquiries should be directed to the undersigned at (571) 272-3231.

DWood

Douglas I. Wood
Senior Petitions Attorney
Office of Petitions

UNITED STATES PATENT AND TRADEMARK OFFICE

COMMISSIONER FOR PATENTS
UNITED STATES PATENT AND TRADEMARK OFFICE
P.O. BOX 1450
ALEXANDRIA, VA 22313-1450
www.uspto.gov

MAILED

NOV 08 2004

DIRECTOR'S OFFICE
TECHNOLOGY CENTER 3600

Fulbright and Jaworski L.L.P.
Patent Docketing 29th Floor
865 South Figueroa Street
Los Angeles, CA 90017-2576

In re application of
Yuh-Shen Song
Application No. 10/646,536
Filed: August 21, 2003
For: ANTI-FRAUD REMOTE CASH TRANSACTION SYSTEM

: **DECISION ON PETITION**
: **TO MAKE SPECIAL**
: **(ACCELERATED**
: **EXAMINATION)**

This is in response to the petition filed on August 21, 2003 to make the above-identified application special on the basis of special examining procedure for certain new applications - accelerated examination as set forth in MPEP § 708.02 VIII.

The requirements for granting special status under this section are: (A) a petition to make special accompanied by the fee set forth in 37 CFR 1.17(i); (B) all claims being directed to a single invention, or an election without traverse if the Office determines that all the claims are not directed to a single invention; (C) a statement that a pre-examination search was made listing the field of search; (D) one copy of each of the references deemed most closely related to the subject matter encompassed by the claims if said references are not already of record; and (E) a detailed discussion of how the claimed subject matter is patentable over the references in accordance with 37 CFR 1.111 (b) and (c).

Since all of the requirements for special status under MPEP § 708.02 VIII have been met, the petition is **GRANTED**.

The examiner is directed (1) to make an interference search for possible interfering applications, (2) to promptly examine this application out of turn, and (3) if any interfering application is discovered, to examine such application simultaneously and state in the first official letter of such application that it is being taken out of turn because of a possible interference.

Petitioner is advised that this application will continue to be special, throughout its entire prosecution and pendency, including interference or appeal, if any, only if petitioner makes a prompt ***bona fide*** effort, in response to each Office action, to place the application in condition for allowance, even if it is necessary to conduct an interview with the examiner to accomplish this purpose.

SUMMARY: Petition to Make Special **GRANTED**.

Randolph A. Reese
Special Programs Examiner
Technology Center 3600
(703) 308-2121

RAR/rwg: 10/14/04

UNITED STATES PATENT AND TRADEMARK OFFICE

COMMISSIONER FOR PATENTS
UNITED STATES PATENT AND TRADEMARK OFFICE
P.O. BOX 1450
ALEXANDRIA, VA 22313-1450
www.uspto.gov

MAILED

NOV 08 2004

DIRECTOR'S OFFICE
TECHNOLOGY CENTER 3600

Fulbright and Jaworski L.L.P.
Patent Docketing 29th Floor
865 South Figueroa Street
Los Angeles, CA 90017-2576

In re application of
Yuh-Shen Song
Application No. 10/646,536
Filed: August 21, 2003
For: ANTI-FRAUD REMOTE CASH TRANSACTION SYSTEM

: **DECISION ON PETITION**
: **TO MAKE SPECIAL**
: **(ACCELERATED**
: **EXAMINATION)**

This is in response to the petition filed on August 21, 2003 to make the above-identified application special on the basis of special examining procedure for certain new applications - accelerated examination as set forth in MPEP § 708.02 VIII.

The requirements for granting special status under this section are: (A) a petition to make special accompanied by the fee set forth in 37 CFR 1.17(i); (B) all claims being directed to a single invention, or an election without traverse if the Office determines that all the claims are not directed to a single invention; (C) a statement that a pre-examination search was made listing the field of search; (D) one copy of each of the references deemed most closely related to the subject matter encompassed by the claims if said references are not already of record; and (E) a detailed discussion of how the claimed subject matter is patentable over the references in accordance with 37 CFR 1.111 (b) and (c).

Since all of the requirements for special status under MPEP § 708.02 VIII have been met, the petition is **GRANTED**.

The examiner is directed (1) to make an interference search for possible interfering applications, (2) to promptly examine this application out of turn, and (3) if any interfering application is discovered, to examine such application simultaneously and state in the first official letter of such application that it is being taken out of turn because of a possible interference.

Petitioner is advised that this application will continue to be special, throughout its entire prosecution and pendency, including interference or appeal, if any, only if petitioner makes a prompt ***bona fide*** effort, in response to each Office action, to place the application in condition for allowance, even if it is necessary to conduct an interview with the examiner to accomplish this purpose.

SUMMARY: Petition to Make Special **GRANTED**.

Randolph A. Reese
Special Programs Examiner
Technology Center 3600
(703) 308-2121

RAR/rwg: 10/14/04

UNITED STATES PATENT AND TRADEMARK OFFICE

Commissioner for Patents
United States Patent and Trademark Office
P.O. Box 1450
Alexandria, VA 22313-1450
www.uspto.gov

FORTKORT GRETHER & KELTON LLP
9442 N. CAPITAL OF TEXAS HWY
ARBORETUM PLAZA ONE, SUITE 500
AUSTIN, TX 78759

COPY MAILED

FEB 21 2008

OFFICE OF PETITIONS

In re Application of :
CAROLAN, et al. :
Application No. 10/646,574 : DECISION ON PETITION
Filed: August 22, 2003 : TO WITHDRAW
Attorney Docket No. **NCMM001US0** : FROM RECORD
:

This is a decision on the Request to Withdraw as attorney or agent of record under 37 C.F.R. § 1.36(b), filed August 9, 2007.

The request is **NOT APPROVED.**

A grantable request to withdraw as attorney/agent of record must be signed by every attorney/agent seeking to withdraw or contain a clear indication that one attorney is signing on behalf of another/others. A request to withdraw will not be approved unless at least 30 (thirty) days would remain between the date of approval and the later of the expiration date of a time to file a response or the expiration date of the maximum time period which can be extended under 37 C.F.R. § 1.136(a).

The request cannot be approved because there remains less than 30 (thirty days) between the date of this decision and the maximum extendable time period for filing a response to the Office action mailed on September 12, 2007.

All future communications from the Office will continue to be directed to the above-listed address until otherwise notified by applicant.

Telephone inquiries concerning this decision should be directed to the undersigned at 571-272- 7253.

Monica A. Graves
Petitions Examiner
Office of Petitions

cc: **JOHN L. NEEDHAM**
RIVERSIDE RESOURCES
100 CONGRESS AVENUE
AUSTIN, TX 78701

SPE RESPONSE FOR CERTIFICATE OF CORRECTION

Paper No.: _____

DATE : 3/27/09

TO SPE OF : ART UNIT 1794

SUBJECT : Request for Certificate of Correction for Appl. No.: 10646609 Patent No.: 7368143 B2

Please respond to this request for a certificate of correction within 7 days.

FOR IFW FILES:

Please review the requested changes/corrections as shown in the **COCIN** document(s) in the IFW application image. No new matter should be introduced, nor should the scope or meaning of the claims be changed.

Please complete the response (see below) and forward the completed response to scanning using document code **COCX**.

FOR PAPER FILES:

Please review the requested changes/corrections as shown in the attached certificate of correction. Please complete this form (see below) and forward it with the file to:

Certificates of Correction Branch (CofC)
South Tower - 9A22
Palm Location 7580
You can fax the Directors/SPE response to 571-270-9990

LAMONTE NEWSOME
Certificates of Correction Branch
703-308-9390 ext. 112

Thank You For Your Assistance

The request for issuing the above-identified correction(s) is hereby:
Note your decision on the appropriate box.

☒ **Approved**	**All** changes apply.
☐ **Approved in Part**	Specify below which changes **do not** apply.
☐ **Denied**	State the reasons for denial below.

Comments: The correction to specification does not introduce any new matter and also does not change the scope of the claims.

KEITH D. HENDRICKS
SUPERVISORY PATENT EXAMINER

AU 1794

UNITED STATES PATENT AND TRADEMARK OFFICE

UNITED STATES DEPARTMENT OF COMMERCE
United States Patent and Trademark Office
Address: COMMISSIONER FOR PATENTS
P.O. Box 1450
Alexandria, Virginia 22313-1450
www.uspto.gov

APPLICATION NO.	FILING DATE	FIRST NAMED INVENTOR	ATTORNEY DOCKET NO.	CONFIRMATION NO.
10/646,632	08/21/2003	J. Patrick Thompson	14917.0552US01	9779

27488 7590 12/27/2007

MERCHANT & GOULD (MICROSOFT)
P.O. BOX 2903
MINNEAPOLIS, MN 55402-0903

EXAMINER
SIDDIQI, MOHAMMAD A

ART UNIT	PAPER NUMBER
2154	

MAIL DATE	DELIVERY MODE
12/27/2007	PAPER

Please find below and/or attached an Office communication concerning this application or proceeding.

The time period for reply, if any, is set in the attached communication.

UNITED STATES PATENT AND TRADEMARK OFFICE

COMMISSIONER FOR PATENTS
UNITED STATES PATENT AND TRADEMARK OFFICE
P.O. BOX 1450
ALEXANDRIA, VA 22313-1450
www.uspto.gov

Timothy B. Scull
Merchant & Gould (Microsoft)
P.O. Box 2903
Minneapolis, MN 55402-0903

MAILED

DEC 27 2007

TECHNOLOGY CENTER 2100

In re Application of:
J. Patrick THOMPSON
Appl. No.: 10/646,632
Filed: August 21, 2003
For: SYSTEMS AND METHODS FOR THE IMPLEMENTATION OF A CORE SCHEMA FOR PROVIDING A TOP-LEVEL STRUCTURE FOR ORGANIZING UNITS OF INFORMATION MANAGEABLE BY A HARDWARE/SOFTWARE INTERFACE SYSTEM

DECISION ON PETITION UNDER 37 CFR § 1.59

This is a decision on the petition under 37 CFR § 1.59(b), filed on 11 December 2007, to expunge information submitted pursuant to MPEP § 724.05.

The petition is **DISMISSED**.

Petitioner requests that the information submitted on 11 December 2007 be expunged from the record if found not to be important to a reasonable examiner in deciding whether to allow the application to issue as a patent. The petition fee set forth in 37 CFR § 1.17(g) has been paid.

The petition is premature because the application has not been allowed or abandoned. Accordingly, it is not appropriate to make a final determination of whether or not the material requested to be expunged is "material," with "materiality" being defined as any information which the examiner considers as being important to a determination of patentability of the claims. Thus, the petition to expunge must be dismissed at this time.

During prosecution on the merits, the examiner will determine whether or not the information submitted on 11 December 2007 is considered to be "material." Once prosecution on the merits is closed, applicant may re-submit a petition to expunge the information. No further fee is required for such a second submission of a petition under 37 CFR § 1.59 to expunge information. If the information is not considered by the examiner to be material, the information will be expunged from the application and may be returned to applicant.

Any inquiry concerning this decision should be directed to the undersigned whose telephone number is (571) 272-3613.

Vincent N. Trans, SPRE/QAS
Technology Center 2100
Computer Architecture, Software, and
Information Security

UNITED STATES PATENT AND TRADEMARK OFFICE

UNITED STATES DEPARTMENT OF COMMERCE
United States Patent and Trademark Office
Address: COMMISSIONER FOR PATENTS
P.O. Box 1450
Alexandria, Virginia 22313-1450
www.uspto.gov

APPLICATION NO.	FILING DATE	FIRST NAMED INVENTOR	ATTORNEY DOCKET NO.	CONFIRMATION NO.
10/646,632	08/21/2003	J. Patrick Thompson	14917.0552US01	9779

27488 7590 04/06/2009

MERCHANT & GOULD (MICROSOFT)
P.O. BOX 2903
MINNEAPOLIS, MN 55402-0903

EXAMINER	
SIDDIQI, MOHAMMAD A	

ART UNIT	PAPER NUMBER
2454	

MAIL DATE	DELIVERY MODE
04/06/2009	PAPER

Please find below and/or attached an Office communication concerning this application or proceeding.

The time period for reply, if any, is set in the attached communication.

UNITED STATES PATENT AND TRADEMARK OFFICE

COMMISSIONER FOR PATENTS
UNITED STATES PATENT AND TRADEMARK OFFICE
P.O. BOX 1450
ALEXANDRIA, VA 22313-1450
www.uspto.gov

MAILED

APR 03 2009

TECHNOLOGY CENTER 2100

Rene A. Pereyra
MERCHANT & GOULD (MICROSOFT)
P.O. BOX 2903
MINNEAPOLIS MN 55402-0903

In re Application of: THOMPSON, J. P.
Application No. **10/646,632**
Filed: August 21, 2003
Docket No. 14917.0552US01
Title: SYSTEMS AND METHODS FOR THE IMPLEMENTATION OF A CORE SCHEMA FOR PROVIDING A TOP-LEVEL STRUCTURE FOR ORGANIZING UNITS OF INFORMATION MANAGEABLE BY A HARDWARE/SOFTWARE INTERFACE SYSTEM

DECISION ON PETITION FOR EXPUNGING INFORMATION UNDER UNDER 37 CFR § 1.59

This is a decision on the renew petition under 37 CFR § 1.59(b), filed on January 05 2009, to expunge information from the above identified application.

The petition is **GRANTED**.

Petitioner requests that the information listed in Exhibit A, submitted on December 11 2007, be expunged from the record. Petitioner states that the information contains proprietary material and/or material that is subjected to a protective order which has not been made public. The petition fee set forth in 37 CFR 1.17(g) has been paid.

The information in question has been determined by the undersigned to not be material to the examination of the instant application. Applicant is required to retain the expunged material(s) for the life of any patent which issues on the above-identified application.

The expunged material has been destroyed, the artifact folder closed and therefor the material will not be returned.

Any inquiry regarding this decision should be directed the undersigned whose telephone number is (571) 272-4147.
/bp/

/Beatriz Prieto/

Beatriz Prieto, Quality Assurance Specialist
Technology Center 2400
Network, Multiplexing, Cable and Security

UNITED STATES PATENT AND TRADEMARK OFFICE

COMMISSIONER FOR PATENTS
UNITED STATES PATENT AND TRADEMARK OFFICE
P.O. BOX 1450
ALEXANDRIA, VA 22313-1450
www.uspto.gov

Paper No.

MCDONNELL BOEHNEN HULBERT & BERGHOFF LLP
300 S. WACKER DRIVE
32ND FLOOR
CHICAGO IL 60606

COPY MAILED

JUN 04 2009

OFFICE OF PETITIONS

In re Application of	:	
Light et al.	:	
Application No. 10/646,633	:	ON APPLICATION FOR
Filed: August 22, 2003	:	PATENT TERM ADJUSTMENT
Atty Docket No. 03-776-D	:	
Title: DETECTION OF HUMAN	:	
PAPILLOMA VIRUS IN	:	
PAPANICOLAOU (PAP) SMEARS	:	

This is in response to the "REQUEST FOR RECONSIDERATION OF PATENT TERM ADJUSTMENT RECONSIDERATION UNDER 37 C.F.R. § 1.705" filed May 7, 2009. Applicant requests that the determination of patent term adjustment be increased by seven hundred thirty-one (731) days to one thousand, one hundred eighty-three (1183) days, if the patent issues on Tuesday, August 25, 2009. Applicant requests this correction on the basis that the Office will take in excess of three years to issue this patent.

As the instant application for patent term adjustment requests reconsideration of the patent term adjustment as it relates to the Office's failure to issue the patent within 3 years of the filing date, a decision is being **held in abeyance** until after the actual patent date. Knowledge of the actual date the patent issues is required to calculate the amount, if any, of additional patent term patentee is entitled to for Office failure to issue the patent within 3 years. See § 1.703(b).

Applicant is given **TWO (2) MONTHS** from the issue date of the patent to file a written request for reconsideration of the patent term adjustment for Office failure to issue the patent

within 3 years. A copy of this decision should accompany the request. Applicant may seek such consideration without payment of an additional fee. However, as to all other bases for seeking reconsideration of the patent term adjustment indicated in the patent, all requirements of § 1.705(d) must be met. Requests for reconsideration on other bases must be timely filed and must include payment of the required fee.

Rather than file the request for reconsideration of Patent Term Adjustment at the time of the mailing of the notice of allowance, applicant is advised that they may wait until the time of the issuance of the patent and file a request for reconsideration of the patent term pursuant to 37 CFR 1.705(d). The USPTO notes that it does not calculate the amount of time earned pursuant to 37 CFR 1.702(b) until the time of the issuance of the patent and accordingly, the Office will consider any request for reconsideration of the patent term adjustment due to an error in the calculation of 37 CFR 1.702(b) to be timely if the request for reconsideration is filed within two months of the issuance of the patent.

The Office acknowledges submission of the $200.00 fee set forth in 37 CFR 1.18(e). No additional fees are required.

The application is being forwarded to the Office of Data Management for issuance of the patent. The patent term adjustment indicated on the patent (as shown on the Issue Notification mailed about three weeks prior to patent issuance) will include any additional adjustment accrued both for Office delay in issuing the patent more than four months after payment of the issue fee and satisfaction of all outstanding requirements, and for the Office taking in excess of three years to issue the patent (to the extent that the three-year period does not overlap with periods already accorded).

Telephone inquiries regarding this decision should be directed to Senior Attorney Paul Shanoski at (571) 272-3225.

Nancy Johnson
Senior Petitions Attorney
Office of Petitions

UNITED STATES PATENT AND TRADEMARK OFFICE

Commissioner for Patents
United States Patent and Trademark Office
P.O. Box 1450
Alexandria, VA 22313-1450
www.uspto.gov

HOGAN & HARTSON L.L.P.
500 S. GRAND AVENUE
SUITE 1900
LOS ANGELES, CA 90071-2611

COPY MAILED

SEP 0 9 2004

OFFICE OF PETITIONS

In re Application of :
Robbins et al. :
Application No. 10/646,634 : ON PETITION
Filed: August 21, 2003 :
Attorney Docket No. 89205.0011 :

This is a notice regarding your request for acceptance of a fee deficiency submission under 37 CFR 1.28. On September 1, 1998, the Court of Appeals for the Federal Circuit held that 37 CFR 1.28(c) is the sole provision governing the time for correction of the erroneous payment of the issue fee as a small entity. **See DH Technology v. Synergystex International, Inc. 154 F.3d 1333, 47 USPQ2d 1865 (Fed. Cir. Sept. 1, 1998).**

The Office no longer investigates or rejects original or reissue applications under 37 CFR 1.56. **1098 Off. Gaz. Pat. Office 502 (January 3, 1989).** Therefore, nothing in this Notice is intended to imply that an investigation was done.

Your fee deficiency submission under 37 CFR 1.28 is hereby **ACCEPTED**.

Inquiries related to this communication should be directed to the undersigned at (703) 306-0482. Any telephone inquiries after September 28, 2004 should be directed to (571) 272-3206.

Liana Chase
Petitions Examiner
Office of Petitions
Office of the Deputy Commissioner
for Patent Examination Policy

UNITED STATES PATENT AND TRADEMARK OFFICE

COMMISSIONER FOR PATENTS
UNITED STATES PATENT AND TRADEMARK OFFICE
P.O. BOX 1450
ALEXANDRIA, VA 22313-1450
www.uspto.gov

HOGAN & HARTSON L.L.P.
500 S. GRAND AVENUE
SUITE 1900
LOS ANGELES CA 90071-2611

MAIL

JAN 2 8 2005

DIRECTOR OFFICE
TECHNOLOGY CENTER 2600

In re Application of
Michael Stuart Robbins, et al.
Application No. 10/646,634
Filed: August 21, 2003
For: METHOD AND SYSTEM FOR ARRANGING A PAINT COLOR DISPLAY

DECISION ON PETITION TO MAKE SPECIAL

This is a decision on the Petition to Make Special pursuant to MPEP §708.02, section II (Infringement).

A grantable petition under 37 CFR §1.102(d) and MPEP §708.02, section II (Infringement), must be accompanied by the required fee and a statement alleging:

(1) that there is an infringing device or product actually on the market or method in use;
(2) that a rigid comparison of the alleged infringing device, product, or method with the claims of the application has been made, and that, in his or her opinion, some of the claims are unquestionably infringed; and
(3) that he or she has made or caused to be made a careful and thorough search of the prior art or has a good knowledge of the pertinent prior art. Further, Applicant must provide a copy of each of the references deemed most closely related to the subject matter encompassed by the claims if the references are not already of record.

The statement submitted by Michael S. Robbins, taken together with the declaration of Samuel B. Stone, meets all the above-listed requirements. Accordingly, the petition is **GRANTED**.

The application will retain its special status throughout its entire prosecution, including any appeal to the Board of Patent Appeals and Interferences, subject only to diligent prosecution by the applicant.

Dwayne Bost
Special Program Examiner
Technology Center 2600
Communications

UNITED STATES PATENT AND TRADEMARK OFFICE

Commissioner for Patents
United States Patent and Trademark Office
P.O. Box 1450
Alexandria, VA 22313-1450
www.uspto.gov

WOODCOCK WASHBURN LLP
(MICROSOFT CORPORATION)
ONE LIBERTY PLACE - 46TH FLOOR
PHILADELPHIA PA 19103

COPY MAILED

FEB 0 9 2006

OFFICE OF PETITIONS

In re Application of :
Quentin J. Clark et al :
Application No. 10/646,646 : ON PETITION
Filed: August 21, 2003 :
Attorney Docket No. MSFT-2734/305601.01 :

This is a decision on the petition, filed February 9, 2006, under 37 CFR 1.313(c)(2) to withdraw the above-identified application from issue after payment of the issue fee.

The petition is **GRANTED.**

The above-identified application is withdrawn from issue for consideration of a submission under 37 CFR 1.114 (request for continued examination). See 37 CFR 1.313(c)(2).

Petitioner is advised that the issue fee paid on August 29, 2005, in the above-identified application cannot be refunded. If, however, the above-identified application is again allowed, petitioner may request that it be applied towards the issue fee required by the new Notice of Allowance.[1]

Telephone inquiries should be directed to the undersigned at (571) 272-3208.

The examiner of Technology Center AU 2162 will consider the request for continued examination under 37 CFR 1.114.

Karen Creasy

Karen Creasy
Petitions Examiner
Office of Petitions
Office of the Deputy Commissioner
for Patent Examination Policy

---

[1] The request to apply the issue fee to the new Notice may be satisfied by completing and returning the new Issue Fee Transmittal Form PTOL-85(b), which includes the following language thereon: "Commissioner for Patents is requested to apply the Issue Fee and Publication Fee (if any) or re-apply any previously paid issue fee to the application identified above." Petitioner is advised that, whether a fee is indicated as being due or not, the Issue Fee Transmittal Form **must** be completed and timely submitted to avoid abandonment. Note the language in bold text on the first page of the Notice of Allowance and Fee(s) Due (PTOL-85).

UNITED STATES PATENT AND TRADEMARK OFFICE

COMMISSIONER FOR PATENTS
UNITED STATES PATENT AND TRADEMARK OFFICE
P.O. BOX 1450
ALEXANDRIA, VA 22313-1450
www.uspto.gov

Paper No. _____

Date : February 9, 2006

TO : Director, Office of Patent Publication

FROM : Office of the Deputy Commissioner
for Patent Examination Policy

SUBJECT : Withdrawal from Issue of

Applicant(s) :Quentin J. Clark et al
Application No. :10/646,646
Filed :August 21, 2003

The above-identified application has been assigned Patent No. 6,999,969 and an issue date of February 14, 2006.

It is hereby directed that this application be withdrawn from issue at the request of the applicant.

Do not refund the issue fee.

The following erratum should be published in the Official Gazette if the above-identified application is published in the OG of February 14, 2006:

"All reference to Patent No. 6,999,969 to Quentin J. Clark et al of Washington for STORAGE PLATFORM FOR ORGANIZING, SEARCHING, AND SHARING DATA appearing in the Official Gazette of February 14, 2006, should be deleted since no patent was granted."

Karen Creasy

Karen Creasy
Petitions Examiner
Office of Petitions
Office of the Deputy Commissioner
for Patent Examination Policy

cc: Paul Harrison, MDW-4B03,(FAX-273-5468)
Deneise Boyd, MDE-3D39 (FAX-273-5124)
Mary Louise McAskill, ST-8C15 (FAX 305-4372)
Niomi Farmer, ST-8C14 (FAX-305-4372)
Mary E. Johnson (Cookie), MDE-7C71 (FAX 273-0038
Duane Davis P/OPC MDE-7D89
Tamara Greene, ST-8C13

UNITED STATES PATENT AND TRADEMARK OFFICE

Commissioner for Patents
United States Patent and Trademark Office
P.O. Box 1450
Alexandria, VA 22313-1450
www.uspto.gov

WOODCOCK WASHBURN LLP
(MICROSOFT CORPORATION)
ONE LIBERTY PLACE - 46TH FLOOR
PHILADELPHIA PA 19103

COPY MAILED
NOV 09 2006
OFFICE OF PETITIONS

In re Application of	:	
Quentin J. Clark et al	:	
Application No. 10/646,646	:	DECISION GRANTING PETITION
Filed: August 21, 2003	:	UNDER 37 CFR 1.137(b)
Attorney Docket No. MSFT-2734/305604.01	:	

This is a decision on the petition under 37 CFR 1.137(b), filed June 30, 2006, to revive the above-identified application.

The petition is **GRANTED**.

The petition satisfies the conditions for revival pursuant to the provisions of 37 CFR 1.137(b) in that (1) the reply; (2) the petition fee; and (3) the required statement of unintentional delay have been received. Accordingly, the reply to the Notice of Allowance of February 27, 2006, is accepted as having been unintentionally delayed.

Telephone inquiries concerning this decision should be directed to the undersigned at (571) 272-3208.

This matter is being referred to Patent Publication.

Karen Creasy
Petitions Examiner
Office of Petitions

UNITED STATES PATENT AND TRADEMARK OFFICE

Commissioner for Patents
United States Patent and Trademark Office
P.O. Box 1450
Alexandria, VA 22313-1450
www.uspto.gov

WOODCOCK WASHBURN LLP
(MICROSOFT CORPORATION)
ONE LIBERTY PLACE - 46TH FLOOR
PHILADELPHIA PA 19103

COPY MAILED

NOV 16 2006

OFFICE OF PETITIONS

In re Application of :
Quentin J. Clark et al :
Application No. 10/646,646 :
Filed: August 21, 2003 :
Attorney Docket No. MSFT-2734/305604.01 :

ON PETITION

This is a decision on the petition, filed November 14, 2006, under 37 CFR 1.313(c)(2) to withdraw the above-identified application from issue after payment of the issue fee.

The petition is **GRANTED**.

The above-identified application is withdrawn from issue for consideration of a submission under 37 CFR 1.114 (request for continued examination). See 37 CFR 1.313(c)(2).

Petitioner is advised that the issue fee paid on June 30, 2006, in the above-identified application cannot be refunded. If, however, the above-identified application is again allowed, petitioner may request that it be applied towards the issue fee required by the new Notice of Allowance.[1]

Telephone inquiries should be directed to the undersigned at (571) 272-3208.

The examiner of Technology Center AU 2162 will consider the request for continued examination under 37 CFR 1.114.

Karen Creasy

Karen Creasy
Petitions Examiner
Office of Petitions

[1] The request to apply the issue fee to the new Notice may be satisfied by completing and returning the new Issue Fee Transmittal Form PTOL-85(b), which includes the following language thereon: "Commissioner for Patents is requested to apply the Issue Fee and Publication Fee (if any) or re-apply any previously paid issue fee to the application identified above." Petitioner is advised that, whether a fee is indicated as being due or not, the Issue Fee Transmittal Form **must** be completed and timely submitted to avoid abandonment. Note the language in bold text on the first page of the Notice of Allowance and Fee(s) Due (PTOL-85).

UNITED STATES PATENT AND TRADEMARK OFFICE

COMMISSIONER OF PATENTS

March 28, 2005

Douglas G. Hodder
Morrison & Foerster
755 Page Mill RD
Palto Alto, CA 94304-1018

In re Application of:
Jee-Hoon Kim
Serial No: 10/646,655 On Petition
Filing Date: August 21, 2003
For: **TFT SENSOR HAVING IMPROVED IMAGING SURFACE**

In response to the petitions received by fax on February 24, 2005, to withdraw the holding of abandonment in the above application.

The petition is Granted.

The above-identified application became abandoned for failure to reply with the meaning of 37 C.D.R 1.113 in a timely manner to the Notice to File Missing Parts of Nonprovisional Application mailed November 18, 2003. Which set forth a shortened statutory period for reply of two months. Accordingly, the above-identified application became abandoned January 21, 2004. The notice of abandonment was mailed on October 29, 2004.

The evidence submitted is sufficient to establish that the petitioners responded to the Notice to File Missing Parts of Nonprovisional Application Papers on June 16, 2004 with 5 months of extension.

The application was abandoned in error. The office regrets any inconvenience this may have caused the client.

Telephone inquiries concerning this application may be directed to Doshie E. Day (703) 308-3640.

Doshie E. Day
Program Management Assistant
Office of Initial Patent Examination

UNITED STATES PATENT AND TRADEMARK OFFICE

Commissioner for Patents
United States Patent and Trademark Office
P.O. Box 1450
Alexandria, VA 22313-1450
www.uspto.gov

MACMILLAN SOBANSKI & TODD, LLC
ONE MARITIME PLAZA FOURTH FLOOR
720 WATER STREET
TOLEDO, OH 43604-1619

COPY MAILED

JUL 19 2005

OFFICE OF PETITIONS

In re Application of :
Richard James Axe :
Application No. 10/646,656 : ON PETITION
Filed: August 21, 2003 :
Attorney Docket No. 1-24694 :

This is a decision on the petition under 37 CFR 1.137(b), filed December 6, 2004, to revive the above-identified application.

The petition is **GRANTED**.

The above-identified application became abandoned for failure to reply in a timely manner to the non-final Office action mailed May 20, 2004, which set a shortened statutory period for reply of three (3) months. No extension of time under the provisions of 37 CFR 1.136(a) were obtained. Accordingly, the above-identified application became abandoned on August 21, 2004.

Telephone inquiries concerning this decision should be directed to Irvin Dingle at (571) 272-3210.

This matter is being referred to Technology Center AU 3744 for further processing.

Irvin Dingle
Petitions Examiner
Office of Petitions
Office of the Deputy Commissioner
for Patent Examination Policy

UNITED STATES PATENT AND TRADEMARK OFFICE

Commissioner for Patents
United States Patent and Trademark Office
P.O. Box 1450
Alexandria, VA 22313-1450
www.uspto.gov

STEVEN L. HIGHLANDER
FULBRIGHT & JAWORSKI L.L.P.
600 CONGRESS AVENUE, SUITE 2400
AUSTIN, TX 78701

COPY MAILED

JUL 07 2008

OFFICE OF PETITIONS

In re Application of :
Ben SHEN et al. :
Application No. 10/646,664 : DECISION ON PETITION
Filed: August 22, 2003 :
Attorney Docket No. WARF:032US :

This is a decision on the petition under the unintentional provisions of 37 CFR 1.137(b), filed May 02, 2008, to revive the above-identified application.

The petition is **GRANTED**.

This application became abandoned for failure to timely pay the issue and publication fees on or before March 28, 2008, as required by the Notice of Allowance and Fee(s) Due, mailed December 28, 2007, which set a statutory period for reply of three (3) months. Accordingly, the application became abandoned on March 29, 2008.

The petition satisfies the requirements of 37 CFR 1.137(b) in that petitioner has supplied (1) the reply in the form of payment of the issue fee of $720.00 and publication fee of $300.00; (2) the petition fee of $770.00; and (3) a proper statement of unintentional delay. Accordingly, the issue and publication fee payments are accepted as being unintentionally delayed.

Telephone inquiries concerning this decision should be directed to Michelle R. Eason at (571) 272-4231.

This application is being referred to Office of Data Management.

Michelle R. Eason
Paralegal Specialist
Office of Petitions

SPE RESPONSE FOR CERTIFICATE OF CORRECTION

DATE : 5/21/08

Paper No.: —

TO SPE OF : ART UNIT 1792

SUBJECT : Request for Certificate of Correction for Appl. No.: 10/646673 Patent No: 7344755 B2

A response is requested with respect to a request for a certificate of correction.

With respect to the change(s) requested to correct Office and/or Applicant's errors, should the patent read as shown in the certificate of correction attached herewith or the COCIN document(s), in IFW images for the above-identified patented application? No new matter should be introduced, nor should the scope or meaning of the claims be changed.

If the response is for an IFW, within 7 days, please complete and forward the response, to the employee (named below) via scanning into application images, using document code **COCX**.

If the response is for a paper file wrapper, please complete the response and forward the response with the paper file wrapper, to the employee (named below), within 7 days, to:

Certificates of Correction Branch (CofC)
South Tower - 9A22
Palm Location 7580

VIRGINIA TOLBERT
Certificates of Correction Branch
703-308-9390 ext. 113

Thank You For Your Assistance

The request for issuing the above-identified correction(s) is hereby:
Note your decision on the appropriate box.

- ☑ **Approved** — **All** changes apply.
- ☐ **Approved in Part** — Specify below which changes **do not** apply.
- ☐ **Denied** — State the reasons for denial below.

Comments: _____

_____

_____

_____

_____

_____ 1792
SPE **Art Unit**

UNITED STATES PATENT AND TRADEMARK OFFICE

UNITED STATES DEPARTMENT OF COMMERCE
United States Patent and Trademark Office
Address: COMMISSIONER FOR PATENTS
P.O. Box 1450
Alexandria, Virginia 22313-1450
www.uspto.gov

APPLICATION NO.	FILING DATE	FIRST NAMED INVENTOR	ATTORNEY DOCKET NO.	CONFIRMATION NO.
10/646,682	08/22/2003	Dennis S. Fernandez	FERN-P013	1019

22877 7590 08/07/2009
FERNANDEZ & ASSOCIATES LLP
1047 EL CAMINO REAL
SUITE 201
MENLO PARK, CA 94025

EXAMINER	
DEJONG, ERIC S	
ART UNIT	**PAPER NUMBER**
1631	

MAIL DATE	DELIVERY MODE
08/07/2009	PAPER

Please find below and/or attached an Office communication concerning this application or proceeding.

The time period for reply, if any, is set in the attached communication.

UNITED STATES PATENT AND TRADEMARK OFFICE

Commissioner for Patents
United States Patent and Trademark Office
P.O. Box 1450
Alexandria, VA 22313-1450
www.uspto.gov

AUG 0 7 2009

FERNANDEZ & ASSOCIATES LLP
1047 EL CAMINO REAL
SUITE 201
MENLO PARK CA 94025

In re Application of :	:
Dennis S. Fernandez	:
Serial No.: 10/646,682	: PETITION TO MAKE SPECIAL
Filed: August 22, 2003	:
Attorney Docket No.: **FERN-P013**	:

This is in response to applicant's petition filed August 22, 2003, to make the above-identified application special under the provisions of 37 CFR 1.102(d), based on applicants who are small entities having applications relating to biotechnology.

Applicants have satisfied the provisions set forth in M.P.E.P. 708.02, XII (A), (B), and (C). Therefore, the petition is **GRANTED**.

Should there be any questions with regard to this letter please contact Marianne C. Seidel by letter addressed to the Director, Technology Center 1600, PO BOX 1450, ALEXANDRIA, VA 22313-1450, or by telephone at 571-272-0584 or by facsimile transmission to the general Office facsimile number.

Marianne C. Seidel
Special Program Examiner
Technology Center 1600

UNITED STATES PATENT AND TRADEMARK OFFICE

Commissioner for Patents
United States Patent and Trademark Office
P.O. Box 1450
Alexandria, VA 22313-1450
www.uspto.gov

MAIL

NOV 2 6 2004

DIRECTOR OFFICE
TECHNOLOGY CENTER 2100

MATTINGLY, STANGER, & MALUR, P.C.
1800 DIAGONAL ROAD
SUITE 370
ALEXANDRIA, VA 22314

In re Application of: Mogi, et al.
Application No. 10/646,699
Filed: August 25, 2003
For: CACHE MANAGEMENT METHOD FOR STORAGE DEVICE

DECISION ON PETITION FOR ACCELERATED EXAMINATION UNDER M.P.E.P.§708.02(VIII)

This is a decision on the petition filed August 27, 2004 under 37 C.F.R. 102(d) and M.P.E.P. § 708.02(VIII): Accelerated Examination, to make the above-identified application special.

The Petition is **GRANTED**.

M.P.E.P. § 708.02, Section VIII which sets out the prerequisites for a grantable petition for Accelerated Examination under 37 C.F.R. § 102(d) states in relevant part:

A new application (one which has not received any examination by the examiner) may be granted special status provided that applicant (and this term includes applicant's attorney or agent) complies with each of the following items:

(a) Submits a petition to make special accompanied by the fee set forth in **37 CFR 1.17(h)**;

(b) Presents all claims directed to a single invention, or if the Office determines that all the claims presented are not obviously directed to a single invention, will make an election without traverse as a prerequisite to the grant of special status;

(c) Submits a statement(s) that a pre-examination search was made, listing the field of search by class and subclass, publication, Chemical Abstracts, foreign patents, etc. The pre-examination search must be directed to the invention as claimed in the application for which special status is requested. A search made by a foreign patent office satisfies this requirement;

(d) Submits one copy each of the references deemed most closely related to the subject matter encompassed by the claims if said references are not already of record; and

(e) Submits a detailed discussion of the references, which discussion points out, with the particularity required by 37 CFR 1.111 (b) and (c), how the claimed subject matter is patentable over the references.

Petition to Make Special **GRANTED** since all of the requirements for special status under MPEP § 708.02(VIII) have been met. **Appplicant may wish to consider filing an Information Disclosure Statement (PTO-1449 or PTO-SB08A) for consideration of the references cited in the petition by the assigned examiner.**

The application file is being forwarded to the Examiner for accelerated examination in accordance with the procedures set forth in M.P.E.P. §708.02, Section VIII. If the application is subsequently allowed, it will be given priority for printing. See M.P.E.P. §1309.

11/19/04

Brian L. Johnson
Special Program Examiner
Technology Center 2100
Computer Architecture, Software and Information Security
571-272-3595

MBS

UNITED STATES PATENT AND TRADEMARK OFFICE

UNITED STATES DEPARTMENT OF COMMERCE
United States Patent and Trademark Office
Address: COMMISSIONER FOR PATENTS
P.O. Box 1450
Alexandria, Virginia 22313-1450
www.uspto.gov

APPLICATION NO.	FILING DATE	FIRST NAMED INVENTOR	ATTORNEY DOCKET NO.	CONFIRMATION NO.
10/646,704	08/25/2003	Kenichiro Nakamura	0505-1227P	9815

2292 7590 03/14/2005

BIRCH STEWART KOLASCH & BIRCH
PO BOX 747
FALLS CHURCH, VA 22040-0747

EXAMINER	
DONOVAN, LINCOLN D	

ART UNIT	PAPER NUMBER
2832	

DATE MAILED: 03/14/2005

Please find below and/or attached an Office communication concerning this application or proceeding.

UNITED STATES PATENT AND TRADEMARK OFFICE

Commissioner for Patents
United States Patent and Trademark Office
P.O. Box 1450
Alexandria, VA 22313-1450
www.uspto.gov

Paper No. 030905

02292
BIRCH STEWART KOLASCH & BIRCH
PO BOX 747
FALLS CHURCH VA 22040-0747

In re Application of:
Nakamura et al.
Serial No.: 10/646,704
Filed: August 25, 2003
For: VIBRATION-PROOF STRUCTURE FOR A GEAR TRANSMISSION
Attorney Docket No.: **0505-1227P**

DECISION *SUA SPONTE* VACATING OFFICE ACTION

This is a decision, *sua sponte*, vacating the final Office action mailed February 28, 2005 in the above identified application.

A final Office action was mailed on February 28, 2005, setting a three-month shortened statutory period for filing a reply thereto. The Office action is not intended for the instant application and was issued in error.

Although no petition or request has been filed, the Office action is hereby vacated. No reply from the applicant is necessary at this time. Inconvenience to the applicant is regretted.

The application file is being forwarded to the appropriate group where it awaits examination in its turn.

Any inquiry regarding this decision should be directed to Elvin Enad, Supervisory Patent Examiner, at (571) 272-1990.

Elvin Enad
SPE, Art Unit 2832

UNITED STATES PATENT AND TRADEMARK OFFICE

UNITED STATES DEPARTMENT OF COMMERCE
United States Patent and Trademark Office
Address: COMMISSIONER FOR PATENTS
P.O. Box 1450
Alexandria, Virginia 22313-1450
www.uspto.gov

STERNE, KESSLER, GOLDSTEIN & FOX P.L.L.C.
1100 NEW YORK AVENUE, N.W.
WASHINGTON, DC 20005

Mail Date: 04/21/2010

Applicant	: Darren Neuman	: DECISION ON REQUEST FOR
Patent Number	: 7590503	: RECALCULATION of PATENT
Issue Date	: 09/15/2009	: TERM ADJUSTMENT IN VIEW
Appliction No	: 10/646,719	: OF WYETH AND NOTICE OF INTENT TO
Filed	: 08/25/2003	: ISSUE CERTIFICATE OF CORRECTION
		:

The Request for Recalculation is **GRANTED** to the extent indicated.

The patent term adjustment has been determined to be **0** days. The USPTO will *sua sponte* issue a certificate of correction reflecting the amount of PTA days determined by the recalculation.

Prior to the issuance of the certificate of correction, the USPTO will afford patentee an opportunity to be heard and request reconsideration. Accordingly, patentee has **one month or thirty (30) days**, whichever is longer, to file a request for reconsideration of this patent term adjustment calculation. See 35 U.S.C. 154(b)(3)(B)(ii) and 37 CFR 1.322(a)(4). No extensions of time will be granted under 37 CFR 1.136.

Patentee should use document code PET.OP if electronically filing a request for reconsideration of this patent term adjustment calculation. The patentee must also include the information required by 37 CFR 1.705(b)(2) and the fee required by 37 CFR 1.18(e). If patentee does not file a timely request for reconsideration of this patent term adjustment calculation including the information required by 37 CFR 1.705(b)(2) and the fee required by 37 CFR 1.18(e), the USPTO will issue a certificate of correction reflecting the PTA determination noted above.

Patentee should be aware that in order to preserve the right to review in the United States District Court for the District of Columbia of the USPTO patent term adjustment determination, patentee must ensure that he or she also take the steps required under 35 U.S.C. 154(b)(4)(A) in a timely manner. Nothing in the request for recalculation should be construed as providing an alternative time frame for commencing a civil action under 35 U.S.C. 154(b)(4)(A).

Any questions concerning this decision should be directed to the Office of Patent Legal Administration at 571-272-7702.

SPE RESPONSE FOR CERTIFICATE OF CORRECTION

Paper No.: _____

DATE : 1/23/07

TO SPE OF : ART UNIT 1646

SUBJECT : Request for Certificate of Correction on Patent No.: 7138498

A response is requested with respect to the accompanying request for a certificate of correction.

Please complete this form and return with file, within 7 days to:
Palm location **7580, Certificates of Correction Branch – South Tower – 9A22**
If response is for an IFW, **return to employee (named below) via PUBSCofC Team in MADRAS.**
With respect to the change(s) requested, correcting Office and/or Applicant's errors, should the patent read as shown in the certificate of correction (COCIN)? No new matter should be introduced, nor should the scope or meaning of the claims be changed.

Valerie Jackson

Thank You For Your Assistance

Certificates of Correction Branch
Tel. No. 703-308-9390 ext. 114

The request for issuing the above-identified correction(s) is hereby:
Note your decision on the appropriate box.

- ☑ **Approved** — All changes apply.
- ☐ **Approved in Part** — Specify below which changes **do not** apply.
- ☐ **Denied** — State the reasons for denial below.

Comments:

[signature]
SPE

1646
Art Unit

UNITED STATES PATENT AND TRADEMARK OFFICE

Commissioner for Patents
United States Patent and Trademark Office
P. O. Box 1450
Alexandria, VA 22313-1450
www. uspto. gov

COPY MAILED

OCT 13 2009

OFFICE OF PETITIONS

DICKSTEIN SHAPIRO LLP
1825 EYE STREET NW
WASHINGTON, DC 20006-5403

In re Patent No. 6,991,636 :
Issue Date: January 31, 2006 :
Application No. 10/646,827 : NOTICE
Filed: August 25, 2003 :
Attorney Docket No. A8130.0141/P141

This is a notice regarding your request for acceptance of a fee deficiency submission under 37 CFR 1.28. On September 1, 1998, the Court of Appeals for the Federal Circuit held that 37 CFR 1.28(c) is the sole provision governing the time for correction of the erroneous payment of the issue fee as a small entity. **See DH Technology v. Synergystex International, Inc. 154 F.3d 1333, 47 USPQ2d 1865 (Fed. Cir. Sept. 1, 1998).**

The Office no longer investigates or rejects original or reissue applications under 37 CFR 1.56. **1098 Off. Gaz. Pat. Office 502 (January 3, 1989)**. Therefore, nothing in this Notice is intended to imply that an investigation was done.

Your fee deficiency submission under 37 CFR 1.28 is hereby **ACCEPTED**.

Inquiries related to this communication should be directed to Irvin Dingle at (571) 272-3210.

Irvin Dingle
Petitions Examiner
Office of Petitions

SPE RESPONSE FOR CERTIFICATE OF CORRECTION

Paper No.:0306

DATE : March 29, 2006

TO SPE OF : ART UNIT 1711

SUBJECT : Request for Certificate of Correction on Patent No.: 6,960,618

A response is requested with respect to the accompanying request for a certificate of correction.

Please complete this form and return with file, within **7** days to:
Certificates of Correction Branch - PK 3-910
Palm location **7590** - Tel. No. 305-8201

With respect to the change(s) requested, correcting Office and/or Applicant's errors, should the patent read as shown in the certificate of correction? No new matter should be introduced, nor should the scope or meaning of the claims be changed.

Thank You For Your Assistance **Certificates of Correction Branch**

The request for issuing the above-identified correction(s) is hereby:
Note your decision on the appropriate box.

☒ **Approved** **All** changes apply.

☐ **Approved in Part** Specify below which changes **do not** apply.

☐ **Denied** State the reasons for denial below.

Comments:

Changes are acceptable.

SPE: james seidleck **Art Unit** 1711

SPE RESPONSE FOR CERTIFICATE OF CORRECTION

Paper No.:20070924

DATE : September 24, 2007

TO SPE OF : ART UNIT 2838

SUBJECT : Request for Certificate of Correction on Patent No.: 6809941

A response is requested with respect to the accompanying request for a certificate of correction.

Please complete this form and return with file, within **7** days to:
Certificates of Correction Branch - PK 3-910
Palm location **7590** - Tel. No. 305-8201

With respect to the change(s) requested, correcting Office and/or Applicant's errors, should the patent read as shown in the certificate of correction? No new matter should be introduced, nor should the scope or meaning of the claims be changed.

Thank You For Your Assistance **Certificates of Correction Branch**

The request for issuing the above-identified correction(s) is hereby:
Note your decision on the appropriate box.

☒ **Approved** **All** changes apply.

☐ **Approved in Part** Specify below which changes **do not** apply.

☐ **Denied** State the reasons for denial below.

Comments:

KARL EASTHOM
SUPERVISORY PATENT EXAMINER

SPE: Karl D. Easthom **Art Unit** 2838

SPE RESPONSE FOR CERTIFICATE OF CORRECTION

Paper No.:20070929

DATE : September 29, 2007

TO SPE OF : ART UNIT 2838

SUBJECT : Request for Certificate of Correction on Patent No.: 6809941

A response is requested with respect to the accompanying request for a certificate of correction.

Please complete this form and return with file, within **7** days to:
Certificates of Correction Branch - PK 3-910
Palm location **7590** - Tel. No. 305-8201

With respect to the change(s) requested, correcting Office and/or Applicant's errors, should the patent read as shown in the certificate of correction? No new matter should be introduced, nor should the scope or meaning of the claims be changed.

Thank You For Your Assistance **Certificates of Correction Branch**

The request for issuing the above-identified correction(s) is hereby:
Note your decision on the appropriate box.

☒ **Approved** **All** changes apply.

☐ **Approved in Part** Specify below which changes **do not** apply.

☐ **Denied** State the reasons for denial below.

Comments:

ok to enter as not affecting scope of the invention

KARL EASTHOM
SUPERVISORY PATENT EXAMINER

SPE: Karl Easthom **Art Unit** 2838

UNITED STATES PATENT AND TRADEMARK OFFICE

Commissioner for Patents
United States Patent and Trademark Office
P.O. Box 1450
Alexandria, VA 22313-1450
www.uspto.gov

TEXAS INSTRUMENTS INCORPORRATED
P.O. BOX 655474, M/S 3999
DALLAS, TX 75265

COPY MAILED

SEP 22 2008

In re Application of :
Fredrick W. Trafton et al :
Application No. 10/646,854 : DECISION ON PETITION
Filed: August 26, 2003 : UNDER 37 CFR 1.78(a)(6)
Attorney Docket No. TI-35749 :

This is a decision on the petition under 37 CFR 1.78(a)(6), filed November 30, 2007, to accept an unintentionally delayed claim under 35 U.S.C. § 119(e) for the benefit of priority to a prior-filed provisional application.

The petition is **DISMISSED.**

A petition under 37 CFR 1.78(a)(6) is only applicable to those applications filed on or after November 29, 2000. Further, the petition is appropriate only after expiration of the period specified in 37 CFR 1.78(a)(5)(ii) and must be filed during the pendency of the nonprovisional application. In addition, the petition must be accompanied by:

(1) the reference required by 35 U.S.C. § 119(e) and 37 CFR 1.78(a)(5)(i) to the prior-filed application, unless previously submitted;
(2) the surcharge set forth in § 1.17(t); and
(3) a statement that the entire delay between the date the claim was due under 37 CFR 1.78(a)(5)(ii) and the date the claim was filed was unintentional. The Director may require additional information where there is a question whether the delay was unintentional.

This pending nonprovisional application was filed on August 26, 2003, within twelve months of the filing date of the prior-filed provisional application, Application No. 60/438,164, which was filed on January 6, 2003, and for which priority is claimed.

The Application Data Sheet submitted with the petition on November 30, 2007 does not list the Application Number; i.e., 10/646,854. Petitioner must submit the Application Number for the prior Application Status.

Accordingly, before the petition under 37 CFR 1.78(a)(6) can be granted, a renewed petition under 37 CFR 1.78(a)(6) and either an Application Data Sheet or a substitute amendment (complying with 37 CFR 1.121 and 37 CFR 1.76(b)(5)), are required.

Further correspondence with respect to this matter should be addressed as follows:

By mail:	Mail Stop PETITIONS Commissioner for Patents Post Office Box 1450 Alexandria, VA 22313-1450
By hand:	Customer Service Window Mail Stop Petitions Randolph Building 401 Dulany Street Alexandria, VA 22314
By fax:	(571) 273-8300 ATTN: Office of Petitions

Any questions concerning this matter may be directed to Irvin Dingle at (571) 272-3210.

David Bucci
Petitions Examiner
Office of Petitions

UNITED STATES PATENT AND TRADEMARK OFFICE

Commissioner for Patents
United States Patent and Trademark Office
P.O. Box 1450
Alexandria, VA 22313-1450
www.uspto.gov

TEXAS INSTRUMENTS INCORPORATED
P.O. BOX 655474, M/S 3999
DALLAS, TX 75265

COPY MAILED

OCT 2 8 2008

OFFICE OF PETITIONS

In re Application of :
Fredrick W. Trafton et al :
Application No. 10/646,854 : DECISION ON PETITION
Filed: August 26, 2003 : UNDER 37 CFR 1.78(a)(6)
Attorney Docket No. TI-35749 :

This is a decision on the renewed petition under 37 CFR 1.78(a)(6), filed October 15, 2008, to accept an unintentionally delayed claim under 35 U.S.C. §119(e) for the benefit of the prior-filed provisional application set forth in the concurrently filed Application Data Sheet.

The petition is **GRANTED.**

A petition under 37 CFR 1.78(a)(6) is only applicable to those applications filed on or after November 29, 2000. Further, the petition is appropriate only after expiration of the period specified in 37 CFR 1.78(a)(5)(ii) and must be filed during the pendency of the nonprovisional application. In addition, the petition must be accompanied by:

(1) the reference required by 35 U.S.C. § 119(e) and 37 CFR 1.78(a)(5)(i) to the prior-filed application, unless previously submitted;
(2) the surcharge set forth in § 1.17(t); and
(3) a statement that the entire delay between the date the claim was due under 37 CFR 1.78(a)(5)(ii) and the date the claim was filed was unintentional. The Director may require additional information where there is a question whether the delay was unintentional.

Additionally, the instant nonprovisional application must be pending at the time of filing of the reference to the prior-filed provisional application as required by 37 CFR 1.78(a)(5)(ii). Further, the nonprovisional application claiming the benefit of the prior-filed provisional application must have been filed within twelve months of the filing date of the prior-filed provisional application.

All of the above requirements having been satisfied, the late claim for priority under 35 U.S.C. § 119(e) is accepted as being unintentionally delayed.

The granting of the petition to accept the delayed benefit claim to the prior-filed application under 37 CFR 1.78(a)(6) should not be construed as meaning that this application is entitled

to the benefit of the filing date of the prior-filed application. In order for this application to be entitled to the benefit of the prior-filed application, all other requirements under 35 U.S.C. §119(e) and 37 CFR 1.78(a)(4) and (a)(5) must be met. Similarly, the fact that the corrected Filing Receipt accompanying this decision on petition includes the prior-filed application should not be construed as meaning that applicant is entitled to the claim for benefit of priority to the prior-filed application noted thereon. Accordingly, the examiner will, in due course, consider this benefit claim and determine whether the application is entitled to the benefit of the earlier filing date.

A corrected Filing Receipt, which includes the priority claim to the prior-filed provisional application, accompanies this decision on petition.

Any inquiries concerning this decision may be directed to Irvin Dingle at (571) 272-3210. All other inquiries concerning either the examination procedures or status of the application should be directed to the Technology Center.

The application is being forwarded to Technology Center AU 2838 for consideration by the examiner of the claim under 35 U.S.C. §119(e) for the benefit of priority to the prior-filed provisional application.

David Bucci
Petition Examiner
Office of Petitions

ATTACHMENT: Corrected Filing Receipt

UNITED STATES PATENT AND TRADEMARK OFFICE

UNITED STATES DEPARTMENT OF COMMERCE
United States Patent and Trademark Office
Address: COMMISSIONER FOR PATENTS
P.O. Box 1450
Alexandria, Virginia 22313-1450
www.uspto.gov

APPLICATION NUMBER	FILING or 371(c) DATE	GRP ART UNIT	FIL FEE REC'D	ATTY.DOCKET.NO	TOT CLAIMS	IND CLAIMS
10/646,854	08/26/2003	2838	1056	TI-35749	19	2

CONFIRMATION NO. 2827

CORRECTED FILING RECEIPT

23494
TEXAS INSTRUMENTS INCORPORATED
P O BOX 655474, M/S 3999
DALLAS, TX 75265

OC00000032804746

Date Mailed: 10/28/2008

Receipt is acknowledged of this non-provisional patent application. The application will be taken up for examination in due course. Applicant will be notified as to the results of the examination. Any correspondence concerning the application must include the following identification information: the U.S. APPLICATION NUMBER, FILING DATE, NAME OF APPLICANT, and TITLE OF INVENTION. Fees transmitted by check or draft are subject to collection. Please verify the accuracy of the data presented on this receipt. **If an error is noted on this Filing Receipt, please submit a written request for a Filing Receipt Correction. Please provide a copy of this Filing Receipt with the changes noted thereon. If you received a "Notice to File Missing Parts" for this application, please submit any corrections to this Filing Receipt with your reply to the Notice. When the USPTO processes the reply to the Notice, the USPTO will generate another Filing Receipt incorporating the requested corrections**

Applicant(s)

Fredrick W. Trafton, Lewisville, TX;
Sujanto Gunawan, Coppell, TX;

Assignment For Published Patent Application

Texas Instruments Incorporated, Dallas, TX

Power of Attorney: The patent practitioners associated with Customer Number 23494

Domestic Priority data as claimed by applicant

This appln claims benefit of 60/438,164 01/06/2003

Foreign Applications

If Required, Foreign Filing License Granted: 11/21/2003

The country code and number of your priority application, to be used for filing abroad under the Paris Convention, is **US 10/646,854**

Projected Publication Date: Not Applicable

Non-Publication Request: No

Early Publication Request: No

Title

Reconfigurable topology for switching and linear voltage regulators

Preliminary Class

323

PROTECTING YOUR INVENTION OUTSIDE THE UNITED STATES

Since the rights granted by a U.S. patent extend only throughout the territory of the United States and have no effect in a foreign country, an inventor who wishes patent protection in another country must apply for a patent in a specific country or in regional patent offices. Applicants may wish to consider the filing of an international application under the Patent Cooperation Treaty (PCT). An international (PCT) application generally has the same effect as a regular national patent application in each PCT-member country. The PCT process **simplifies** the filing of patent applications on the same invention in member countries, but **does not result** in a grant of "an international patent" and does not eliminate the need of applicants to file additional documents and fees in countries where patent protection is desired.

Almost every country has its own patent law, and a person desiring a patent in a particular country must make an application for patent in that country in accordance with its particular laws. Since the laws of many countries differ in various respects from the patent law of the United States, applicants are advised to seek guidance from specific foreign countries to ensure that patent rights are not lost prematurely.

Applicants also are advised that in the case of inventions made in the United States, the Director of the USPTO must issue a license before applicants can apply for a patent in a foreign country. The filing of a U.S. patent application serves as a request for a foreign filing license. The application's filing receipt contains further information and guidance as to the status of applicant's license for foreign filing.

Applicants may wish to consult the USPTO booklet, "General Information Concerning Patents" (specifically, the section entitled "Treaties and Foreign Patents") for more information on timeframes and deadlines for filing foreign patent applications. The guide is available either by contacting the USPTO Contact Center at 800-786-9199, or it can be viewed on the USPTO website at http://www.uspto.gov/web/offices/pac/doc/general/index.html.

For information on preventing theft of your intellectual property (patents, trademarks and copyrights), you may wish to consult the U.S. Government website, http://www.stopfakes.gov. Part of a Department of Commerce initiative, this website includes self-help "toolkits" giving innovators guidance on how to protect intellectual property in specific countries such as China, Korea and Mexico. For questions regarding patent enforcement issues, applicants may call the U.S. Government hotline at 1-866-999-HALT (1-866-999-4158).

LICENSE FOR FOREIGN FILING UNDER

Title 35, United States Code, Section 184

Title 37, Code of Federal Regulations, 5.11 & 5.15

GRANTED

The applicant has been granted a license under 35 U.S.C. 184, if the phrase "IF REQUIRED, FOREIGN FILING LICENSE GRANTED" followed by a date appears on this form. Such licenses are issued in all applications where the conditions for issuance of a license have been met, regardless of whether or not a license may be required as

set forth in 37 CFR 5.15. The scope and limitations of this license are set forth in 37 CFR 5.15(a) unless an earlier license has been issued under 37 CFR 5.15(b). The license is subject to revocation upon written notification. The date indicated is the effective date of the license, unless an earlier license of similar scope has been granted under 37 CFR 5.13 or 5.14.

This license is to be retained by the licensee and may be used at any time on or after the effective date thereof unless it is revoked. This license is automatically transferred to any related applications(s) filed under 37 CFR 1.53(d). This license is not retroactive.

The grant of a license does not in any way lessen the responsibility of a licensee for the security of the subject matter as imposed by any Government contract or the provisions of existing laws relating to espionage and the national security or the export of technical data. Licensees should apprise themselves of current regulations especially with respect to certain countries, of other agencies, particularly the Office of Defense Trade Controls, Department of State (with respect to Arms, Munitions and Implements of War (22 CFR 121-128)); the Bureau of Industry and Security, Department of Commerce (15 CFR parts 730-774); the Office of Foreign AssetsControl, Department of Treasury (31 CFR Parts 500+) and the Department of Energy.

NOT GRANTED

No license under 35 U.S.C. 184 has been granted at this time, if the phrase "IF REQUIRED, FOREIGN FILING LICENSE GRANTED" DOES NOT appear on this form. Applicant may still petition for a license under 37 CFR 5.12, if a license is desired before the expiration of 6 months from the filing date of the application. If 6 months has lapsed from the filing date of this application and the licensee has not received any indication of a secrecy order under 35 U.S.C. 181, the licensee may foreign file the application pursuant to 37 CFR 5.15(b).

UNITED STATES PATENT AND TRADEMARK OFFICE

UNITED STATES DEPARTMENT OF COMMERCE
United States Patent and Trademark Office
Address: COMMISSIONER FOR PATENTS
P.O. Box 1450
Alexandria, Virginia 22313-1450
www.uspto.gov

TEXAS INSTRUMENTS INCORPORATED
P O BOX 655474, M/S 3999
DALLAS, TX 75265

Mail Date: 04/20/2010

Applicant	: Fredrick W. Trafton	: DECISION ON REQUEST FOR
Patent Number	: 7602167	: RECALCULATION of PATENT
Issue Date	: 10/13/2009	: TERM ADJUSTMENT IN VIEW
Appliction No	: 10/646,854	: OF WYETH AND NOTICE OF INTENT TO
Filed	: 08/26/2003	: ISSUE CERTIFICATE OF CORRECTION
		:

The Request for Recalculation is **GRANTED** to the extent indicated.

The patent term adjustment has been determined to be **820** days. The USPTO will *sua sponte* issue a certificate of correction reflecting the amount of PTA days determined by the recalculation.

Prior to the issuance of the certificate of correction, the USPTO will afford patentee an opportunity to be heard and request reconsideration. Accordingly, patentee has **one month or thirty (30) days**, whichever is longer, to file a request for reconsideration of this patent term adjustment calculation. See 35 U.S.C. 154(b)(3)(B)(ii) and 37 CFR 1.322(a)(4). No extensions of time will be granted under 37 CFR 1.136.

Patentee should use document code PET.OP if electronically filing a request for reconsideration of this patent term adjustment calculation. The patentee must also include the information required by 37 CFR 1.705(b)(2) and the fee required by 37 CFR 1.18(e). If patentee does not file a timely request for reconsideration of this patent term adjustment calculation including the information required by 37 CFR 1.705(b)(2) and the fee required by 37 CFR 1.18(e), the USPTO will issue a certificate of correction reflecting the PTA determination noted above.

Patentee should be aware that in order to preserve the right to review in the United States District Court for the District of Columbia of the USPTO patent term adjustment determination, patentee must ensure that he or she also take the steps required under 35 U.S.C. 154(b)(4)(A) in a timely manner. Nothing in the request for recalculation should be construed as providing an alternative time frame for commencing a civil action under 35 U.S.C. 154(b)(4)(A).

Any questions concerning this decision should be directed to the Office of Patent Legal Administration at 571-272-7702.

UNITED STATES PATENT AND TRADEMARK OFFICE

Commissioner for Patents
United States Patent and Trademark Office
P.O. Box 1450
Alexandria, VA 22313-1450
www.uspto.gov

Paper No. None

STAAS & HALSEY LLP
SUITE 700
1201 NEW YORK AVENUE, N.W.
WASHINGTON DC 20005

COPY MAILED

JUN 14 2005

OFFICE OF PETITIONS

In re Application of :
Tae Hwan Jung :
Application No. 10/646,863 : DECISION ON PETITION
Filed: August 25, 2003 :
Attorney Docket No.: 1594.1274 :
Title: DOOR CONTROL DEVICE FOR :
REFRIGERATORS AND REFRIGERATOR :
WITH THE DEVICE

This is a decision on the petition filed April 20, 2005, requesting that Figures 1-3 be accorded a filing date of August 25, 2003, as part of the original disclosure.

The application was deposited on August 25, 2003. However, on March 10, 2005, the Office of Initial Patent Examination (OIPE) mailed a "Notice to File Missing Parts of Nonprovisional Application (notice)," stating that the application had NOT been accorded a filing date, and advising applicants that a filing date would be accorded upon the depositing of drawings. The notice set a two-month period for response.

In response, on April 20, 2005, applicants filed the present petition. The petition is further accompanied by a postcard receipt acknowledging receipt of "3 sheets of drawings (Figs. 1-3)" in the United States Patent and Trademark Office (Office) on August 25, 2003. Applicants request that Figures 1-3 be accorded a filing date of August 25, 2003 as part of the original disclosure.

It is noted that no sheets of drawings have been located in the electronic file.

Upon review of the record, the above-mentioned figures have not been located among the application papers. However, the evidence is convincing that the application papers deposited on August 25, 2003 included Figures 1-3, and the sheets containing these figures were subsequently misplaced in the Office.

Therefore, the application, including Figures 1-3, was complete on filing and these figures are entitled to a filing date of August 25, 2003 as part of the original disclosure.

Accordingly, the petition is **GRANTED**.

The notice mailed March 10, 2005 referring to the missing drawings was sent in error, and is hereby **VACATED**. Therefore, no petition fee is necessary. The petition fee of $400 will be refunded to Petitioner's Deposit Account.

The Office of Initial Patent Examination will be advised to process this application with a filing date of August 25, 2003, using the original application papers filed on that date, as well as Figures 1-3 submitted on April 20, 2005 with the instant petition and for indication in Office records that these figures were present on filing.

Telephone inquiries regarding this decision should be directed to the undersigned at (571) 272-3225. All other inquiries concerning examination procedures or status of the application should be directed to the Technology Center.

Paul Shanoski
Senior Attorney
Office of Petitions
United States Patent and Trademark Office

UNITED STATES PATENT AND TRADEMARK OFFICE

COMMISSIONER FOR PATENTS
UNITED STATES PATENT AND TRADEMARK OFFICE
P.O. BOX 1450
ALEXANDRIA, VA 22313-1450
www.uspto.gov

MATTINGLY, STANGER, MALUR & BRUNDIDGE, P.C.
1800 DIAGONAL ROAD
SUITE 370
ALEXANDRIA VA 22314

MAILED

DEC 14 2005

TECHNOLOGY CENTER 2100

In re Application of: EBATA, et al.
Application No. 10/646,894
Filed: August 25, 2003
For: METHOD FOR REBALANCING FREE DISK SPACE AMONG NETWORK STORAGES VIRTUALIZED INTO A SINGLE FILE SYSTEM VIEW

DECISION ON PETITION
TO MAKE SPECIAL
(ACCELERATED EXAMINATION)
UNDER M.P.E.P. §708.02 (VIII)

This is a response to the petition filed 21 November 2005 under 37 C.F.R. §1.102(d) and M.P.E.P. §708.02 (VIII): Accelerated Examination, to make the above-identified application special.

The Petition is **GRANTED**.

M.P.E.P. §708.02, Section VIII which sets out the prerequisites for a grantable petition for Accelerated Examination under 37 C.F.R. §1.102(d) states in relevant part:

A new application (one which has not received any examination by the examiner) may be granted special status provided that applicant (and this term includes applicant's attorney or agent) complies with each of the following items:

(a) Submits a petition to make special accompanied by the fee set forth in **37 CFR 1.17(h)**;

(b) Presents all claims directed to a single invention, or if the Office determines that all the claims presented are not obviously directed to a single invention, will make an election without traverse as a prerequisite to the grant of special status;

(c) Submits a statement(s) that a pre-examination search was made, listing the field of search by class and subclass, publication, Chemical Abstracts, foreign patents, etc. The pre-examination search must be directed to the invention as claimed in the application for which special status is requested. A search made by a foreign patent office satisfies this requirement;

(d) Submits one copy each of the references deemed most closely related to the subject matter encompassed by the claims if said references are not already of record; and

(e) Submits a detailed discussion of the references, which discussion points out, with the particularity required by 37 CFR 1.111 (b) and (c), how the claimed subject matter is patentable over the references.

Applicant's submission meets all the criteria set out above. Accordingly, the petition is **GRANTED**.

The application file is being forwarded to the Examiner of Record for accelerated examination according to the procedures set forth in MPEP § 708.02, Section VIII.

Pinchus M. Laufer
Special Program Examiner
Technology Center 2100
Computer Architecture, Software and Information Security
571-272-3599

ds

UNITED STATES PATENT AND TRADEMARK OFFICE

Commissioner for Patents
United States Patent and Trademark Office
P.O. Box 1450
Alexandria, VA 22313-1450
www.uspto.gov

FOOTHILL LAW GROUP, LLP
3333 BOWERS AVE., SUITE 130
SANTA CLARA, CA 95054

COPY MAILED

MAR 2 0 2006

OFFICE OF PETITIONS

In re Application of :
Joar Opheim :
Application No. 10/646,898 : ON PETITION
Filed: August 22, 2003 :
Attorney Docket No. 03-109 :

This is a decision on the petition under 37 CFR 1.137(b), filed December 7, 2005, to revive the above-identified application.

The petition is **GRANTED.**

The above-identified application became abandoned for failure to reply in a timely manner to the non-final Office action mailed April 22, 2005, which set a shortened statutory period for reply of three (3) months. No extensions of time under the provisions of 37 CFR 1.136(a) were obtained. Accordingly, the application became abandoned at midnight on July 22, 2005.

The file does not indicate a change of address has been submitted, although the address given on the petition differs from the address of record. If appropriate, a change of address should be filed in accordance with MPEP 601.03. A courtesy copy of this decision is being mailed to the address given on the petition; however, the Office will mail future correspondence solely to the address of record.

The petition satisfies the requirement of 37 CFR 1.137 (b) in that petitioner has supplied (1) the reply in the form of an Amendment; (2) the petition fee of $750; and (3) the required statement of unintentional delay have been received. Accordingly, the petition filed December 7, 2005 is accepted as having been unintentionally delayed.

Telephone inquiries concerning this decision should be directed to the undersigned at (571) 272-3229.

The application matter is being referred to Technology Center 1600, Art Unit 1615 for further processing.

Retta Williams

Retta Williams
Petitions Examiner
Office of Petitions

cc: Howard E. Lebowitz
905 W. Middlefield Rd., Apt 971
Mountain View, CA 94043

UNITED STATES PATENT AND TRADEMARK OFFICE

Commissioner for Patents
United States Patent and Trademark Office
P.O. Box 1450
Alexandria, VA 22313-1450
www.uspto.gov

JONES DAY (FOR NORDIC NATURALS)
222 EAST 41ST. STREET
NEW YORK NY 10017-6702

COPY MAILED

MAR 17 2009

OFFICE OF PETITIONS

In re Application of :
Joar Opheim :
Application No. 10/646,898 : ON PETITION
Filed: August 22, 2003 :
Attorney Docket No. 012098-0012-999 :

This is a decision on the petition under the unintentional provisions of 37 CFR 1.137(b), filed January 16, 2009, to revive the above-identified application.

The petition is **GRANTED**.

The application became abandoned for failure to timely file a reply within the meaning of 37 CFR 1.113 to the final Office action of May 19, 2008. The proposed reply required for consideration of a petition to revive must be a Notice of Appeal (and appeal fee required by 37 CFR 41.20(b)(2), an amendment that prima facie places the application in condition for allowance, a Request for Continued Examination and submission (37 CFR 1.114), or the filing of a continuing application under 37 CFR 1.53(b). See MPEP 711.03(c)(II)(A)(2). No extensions of time pursuant to the provisions of 37 CFR 1.136(a) were timely obtained. Accordingly, the date of abandonment of this application is August 20, 2008.

It is not apparent whether the statement of unintentional delay was signed by a person who would have been in a position of knowing that the entire delay in filing the required reply from the due date for the reply until the filing of a grantable petition pursuant to 37 CFR 1.137(b) was unintentional. Nevertheless, in accordance with 37 CFR 10.18, the statement is accepted as constituting a certification of unintentional delay. However, in the event that petitioner has no knowledge that the delay was unintentional, petitioner must make such an inquiry to ascertain that, in fact, the delay was unintentional. If petitioner discovers that the delay was intentional, petitioner must notify the Office.

The petition satisfies the requirements of 37 CFR 1.137(b) in that petitioner has supplied (1) the reply in the form of a Request for Continued Examination (RCE) and fee of $405, (2) the petition fee of $810, and (3) an adequate statement of unintentional delay.

An extension of time under 37 CFR 1.136 must be filed prior to the expiration of the maximum extendable period for reply. See In re Application of S., 8 USPQ2d 1630, 1631 (Comm'r Pats. 1988). Since the $555 extension of time fee submitted with the petition on January 16, 2009 was subsequent to the maximum extendable period for reply, this fee is unnecessary and will be credited to petitioner's deposit account as authorized.

Telephone inquiries concerning this decision should be directed to Alicia Kelley at (571) 272-6059.

This application is being referred to Technology Center AU 1611 for processing of the RCE and for appropriate action by the Examiner in the normal course of business in accordance with 37 CFR 1.114.

/SDB/

Sherry D. Brinkley
Petitions Examiner
Office of Petitions

UNITED STATES PATENT AND TRADEMARK OFFICE

Commissioner for Patents
United States Patent and Trademark Office
P.O. Box 1450
Alexandria, VA 22313-1450
www.uspto.gov

HONEYWELL INTERNATIONAL INC.
101 COLUMBIA ROAD
P O BOX 2245
MORRISTOWN NJ 07962-2245

JAN 1 8 2007

In re Application of
GANNON, AARON JAMES
Appl. No.: 10/646,901
Filed: August 22, 2003
For: **SYSTEM AND METHOD FOR CHANGING THE RELATIVE SIZE OF A DISPLAYED IMAGE**

DECISION ON PETITION UNDER 37 CFR 1.59

This is a decision on the petition under 37 CFR 1.59(b), filed September 28, 2006 to expunge information from the above identified application.

The petition is **Granted**.

Petitioner requests that the final Office action mailed June 5, 2006, be expunged from the record. Petitioner argues that comments made by the examiner in the sub-heading "Duty of Disclosure" are inappropriate "in that the statements are at least: (1) contrary to U.S. Patent and Trademark Office (USPTO) policies set forth in the Manual of Patent Examining Procedure (M.P.E.P.); and (2) inconsistent with legal precedent set forth by the Court of Appeals for the Federal Circuit (CAFC).

The Office will not comment on duty of disclosure issues, MPEP 2010.

The examiner in an Interview Summary Record dated September 7, 2006 has withdrawn the Office action of June 5, 2006. A new non-final Office action was mailed October 31, 2006. The time period set forth in the non-final Office action continues to run.

Accordingly, the final Office action mailed June 5, 2006 is vacated and closed. The Interview Summary Record dated September 7, 2006 is also closed.

Andrew Christensen
Acting Director
Technology Center 2600
Communications

UNITED STATES PATENT AND TRADEMARK OFFICE

Commissioner for Patents
United States Patent and Trademark Office
P.O. Box 1450
Alexandria, VA 22313-1450
www.uspto.gov

WEISS & MOY PC
4204 NORTH BROWN AVENUE
SCOTTSDALE AZ 85251

MAILED

APR 2 1 2010

OFFICE OF PETITIONS

In re Application of	:	
Lieberman, Daniel M.	:	
Application No. 10/646,903	:	ON PETITION
Filed: August 22, 2003	:	
Attorney Docket No. 3998P2652	:	

This is a decision on the petition under 37 C.F.R. § 1.137(b), filed February 17, 2010, to revive the above-identified application.

The petition is **GRANTED**.

Telephone inquiries concerning this decision should be directed to the undersigned at (571) 272-3206.

This matter is being referred to Technology Center AU 3767 for further examination on the merits.

Liana Walsh
Petitions Examiner
Office of Petitions

UNITED STATES PATENT AND TRADEMARK OFFICE

Commissioner for Patents
United States Patent and Trademark Office
P.O. Box 1450
Alexandria, VA 22313-1450
www.uspto.gov

COPY MAILED

JAN 0 8 2007

OFFICE OF PETITIONS

LAWSON & WEITZEN, LLP
88 BLACK FALCON AVE
SUITE 345
BOSTON MA 02210

In re Patent No. 7,068,929 :
Issue Date: June 27, 2006 :
Application No. 10/646,907 : DECISION ON PETITION
Filed: August ,25, 2003 :
Attorney Docket No. P23694 :

This is a decision on the petition under 37 CFR 1.182, filed November 16, 2006, requesting issuance of a duplicate Letters Patent for the above-identified patent.

The petition is **GRANTED**.

The Office of Patent Publication is directed to issue a duplicate Letters Patent.

Pursuant to petitioner's request deposit account 19-0089 will be charged the $270.00 difference. The Office is in receipt of $130.00. However, the current petition fee is $400.

Telephone inquiries concerning this decision may be directed to the undersigned at (571) 272-3215.

Inquiries regarding the issuance of a duplicate Letters Patent may be directed to Krystal Paige in the Office of Patent Publication at (703) 308-9250, Ext. 139.

A copy of this decision is being faxed to the Office of Patent Publication for issuance of a duplicate Letters Patent.

Charlema R. Grant
Petition Attorney
Office of Petitions

cc: Krystal Paige, South Tower, 8th Floor, Room C32 (Fax No. (571) 270-9937)

UNITED STATES PATENT AND TRADEMARK OFFICE

Commissioner for Patents
United States Patent and Trademark Office
P.O. Box 1450
Alexandria, VA 22313-1450
www.uspto.gov

Ron Robeniol Legario
University of Sherbrooke
Electrical Engineering Dept.
2500 Boulevard De L'Universite
Sherbrooke, Quebec J1K2R1

COPY MAILED

AUG 0 6 2004

OFFICE OF PETITIONS

In re Application of :
Legario and Alilovic :
Application No. 10/646,930 : LETTER
Filed: August 25, 2003 :
Attorney Docket No. 6826-195 :

Dear Mr. Legario:

You are named as a joint inventor in the above-identified United States patent application filed under the provisions of 35 U.S.C. 116 (United States Code) and 37 CFR 1.47(a), Rules of Practice in Patent Cases. Should a patent be granted on the application you will be designated therein as a joint inventor.

As a named inventor you are entitled to inspect any paper in the file wrapper of the application, order copies of all or any part thereof (at a prepaid cost per 37 CFR 1.19) or make your position of record in the application. Alternatively, you may arrange to do any of the preceding through a registered patent attorney or agent presenting written authorization from you. If you care to join the application, counsel of record (see below) would presumably assist you. Joining in the application would entail the filing of an appropriate oath or declaration by you pursuant to 37 CFR 1.63.

Requests for information regarding your application should be directed to the File Information Unit at (703) 308-2733. Information regarding how to pay for and order a copy of the application, or a specific paper in the application, should be

directed to Certification Division at (703) 308-9726 or 1-800-972-6382 (outside the Washington D.C. area).

Christina Tartera Donnell

Christina Tartera Donnell
Senior Petitions Attorney
Office of Petitions

BERESKIN AND PARR
SCOTIA PLAZA
40 KING STREET WEST-SUITE 4000 BOX 401
TORONTO ON M5H 3Y2 CA CANADA

UNITED STATES PATENT AND TRADEMARK OFFICE

UNITED STATES DEPARTMENT OF COMMERCE
United States Patent and Trademark Office
Address: COMMISSIONER FOR PATENTS
P.O. Box 1450
Alexandria, Virginia 22313-1450
www.uspto.gov

AMSTER, ROTHSTEIN & EBENSTEIN LLP
90 PARK AVENUE
NEW YORK, NY 10016

Mail Date: 04/21/2010

Applicant	: Hamzeh Karami	: DECISION ON REQUEST FOR
Patent Number	: 7621901	: RECALCULATION of PATENT
Issue Date	: 11/24/2009	: TERM ADJUSTMENT IN VIEW
Appliction No	: 10/646,937	: OF WYETH AND NOTICE OF INTENT TO
Filed	: 08/22/2003	: ISSUE CERTIFICATE OF CORRECTION
		:

The Request for Recalculation is **GRANTED** to the extent indicated.

The patent term adjustment has been determined to be **646** days. The USPTO will *sua sponte* issue a certificate of correction reflecting the amount of PTA days determined by the recalculation.

Prior to the issuance of the certificate of correction, the USPTO will afford patentee an opportunity to be heard and request reconsideration. Accordingly, patentee has **one month or thirty (30) days**, whichever is longer, to file a request for reconsideration of this patent term adjustment calculation. See 35 U.S.C. 154(b)(3)(B)(ii) and 37 CFR 1.322(a)(4). No extensions of time will be granted under 37 CFR 1.136.

Patentee should use document code PET.OP if electronically filing a request for reconsideration of this patent term adjustment calculation. The patentee must also include the information required by 37 CFR 1.705(b)(2) and the fee required by 37 CFR 1.18(e). If patentee does not file a timely request for reconsideration of this patent term adjustment calculation including the information required by 37 CFR 1.705(b)(2) and the fee required by 37 CFR 1.18(e), the USPTO will issue a certificate of correction reflecting the PTA determination noted above.

Patentee should be aware that in order to preserve the right to review in the United States District Court for the District of Columbia of the USPTO patent term adjustment determination, patentee must ensure that he or she also take the steps required under 35 U.S.C. 154(b)(4)(A) in a timely manner. Nothing in the request for recalculation should be construed as providing an alternative time frame for commencing a civil action under 35 U.S.C. 154(b)(4)(A).

Any questions concerning this decision should be directed to the Office of Patent Legal Administration at 571-272-7702.

UNITED STATES PATENT AND TRADEMARK OFFICE

Commissioner for Patents
United States Patent and Trademark Office
P.O. Box 1450
Alexandria, VA 22313-1450
www.uspto.gov

RICHARD ARON OSMAN
4070 CALLE ISABELLA
SAN CLEMENTE, CA 92672

COPY MAILED

JUN 16 2008

OFFICE OF PETITIONS

In re Application of	:	
Jasper D. Rine et al	:	
Application No. 10/646,950	:	DECISION ON PETITION
Filed: August 21, 2003	:	
Attorney Docket No. B96-021-6	:	

This is a decision on the petition, filed February 15, 2007 and resubmitted on February 19, 2008, which is being treated as a petition under 37 CFR 1.8(b), requesting withdrawal of the holding of abandonment in the above-identified application.

The petition is **GRANTED**.

The petition satisfies the above requirements of 37 CFR 1.8(b). Accordingly, the holding of abandonment for failure to timely reply to the Office action mailed January 17, 2007 is hereby withdrawn and the application restored to pending status.

This application is being referred to Technology Center AU 1652 for appropriate action in the normal course of business on the reply received September 12, 2007.

Telephone inquiries concerning this decision should be directed to the undersigned at (571) 272-3210.

Irvin Dingle
Petitions Examiner
Office of Petitions

SPE RESPONSE FOR CERTIFICATE OF CORRECTION

7+

Paper No.: _____

DATE : December 14, 2006

TO SPE OF : ART UNIT 3632

SUBJECT : Request for Certificate of Correction for Appl. No.: 10/646954 Patent No.: 7,121,514 B2

Please respond to this request for a certificate of correction within 7 days.

Please review the requested changes/corrections as shown in the **COCIN** document(s) in the IFW application image. No new matter should be introduced, nor should the scope or meaning of the claims be changed.

Please complete the response (see below) and forward the completed response to scanning using document code **COCX**.

Elisha Evans

Certificates of Correction Branch

703-308-9390 ext. 110

Thank You For Your Assistance

The request for issuing the above-identified correction(s) is hereby:

Note your decision on the appropriate box.

- ☑ **Approved** — All changes apply.
- ☐ **Approved in Part** — Specify below which changes **do not** apply.
- ☐ **Denied** — State the reasons for denial below.

Comments: _____

Carl D. Friedman
Supervisory Patent Examiner
Group 3600

3632

SPE **Art Unit**

PTO/SB/44 (04-05)
Approved for use through 04/30/2007. OMB 0651-0033
U.S. Patent and Trademark Office; U.S. DEPARTMENT OF COMMERCE
Under the Paperwork Reduction Act of 1995, no persons are required to respond to a collection of information unless it displays a valid OMB control number.
(Also Form PTO-1050)

UNITED STATES PATENT AND TRADEMARK OFFICE
CERTIFICATE OF CORRECTION

PATENT NO. : 7,121,514

APPLICATION NO.: 10/646,954

ISSUE DATE : October 17, 2006

INVENTOR(S) : Robert H. Twyford

It is certified that an error appears or errors appear in the above-identified patent and that said Letters Patent is hereby corrected as shown below:

On the cover sheet, the titile of the invention should read "APPARATUS AND METHOD FOR UNIVERSAL MOUNTING OF A COMPUTER SYSTEM IN A VEHICLE".

Column 1, lines 1-2, "BEST MODE FOR CARRYING OUT THE INVENTION" should read "APPARATUS AND METHOD FOR UNIVERSAL MOUNTING OF A COMPUTER SYSTEM IN A VEHICLE".

MAILING ADDRESS OF SENDER (Please do not use customer number below):

Joseph G. Seeber, Esquire
P.O. Box 750
Great Falls, Virginai 22066

NOV 2 0 2006

This collection of information is required by 37 CFR 1.322, 1.323, and 1.324. The information is required to obtain or retain a benefit by the public which is to file (and by the USPTO to process) an application. Confidentiality is governed by 35 U.S.C. 122 and 37 CFR 1.14. This collection is estimated to take 1.0 hour to complete, including gathering, preparing, and submitting the completed application form to the USPTO. Time will vary depending upon the individual case. Any comments on the amount of time you require to complete this form and/or suggestions for reducing this burden, should be sent to the Chief Information Officer, U.S. Patent and Trademark Office, U.S. Department of Commerce, P.O. Box 1450, Alexandria, VA 22313-1450. DO NOT SEND FEES OR COMPLETED FORMS TO THIS ADDRESS. SEND TO: **Attention Certificate of Corrections Branch, Commissioner for Patents, P.O. Box 1450, Alexandria, VA 22313-1450.**

If you need assistance in completing the form, call 1-800-PTO-9199 and select option 2.

UNITED STATES PATENT AND TRADEMARK OFFICE

Commissioner for Patents
United States Patent and Trademark Office
P.O. Box 1450
Alexandria, VA 22313-1450
www.uspto.gov

Myers Bigel Sibley & Sajovec, PA
PO Box 37428
Raleigh NC 27627

COPY MAILED

NOV 2 5 2003

OFFICE OF PETITIONS

In re Application of :
Zhao et al. :
Application No. 10/646,962 :
Filed: August 22, 2003 :
Attorney Docket No. 9400-44 :

DECISION ON PETITION

This is a decision on the petition under 37 CFR 1.10, filed October 21, 2003, requesting that the above-identified application be accorded a filing date of August 22, 2003, rather than the presently accorded filing date of August 25, 2003.

Petitioner requests the earlier filing date on the basis that the application was purportedly deposited on August 22, 2003, under 37 CFR 1.10 by "Express Mail Post Office to Addressee" service. In support, petitioner supplied a copy of a United States Postal Service Track & Confirm record of the shipment details of a package bearing Express Mail Label No. EV318419391US, indicating that the package was accepted on August 22, 2003, at 5:44 pm, in Raleigh, NC 27612. The same Express Mail Label Number appears on the application papers as originally filed.

Petitioner did not supply a copy of the Express Mail Label with the present petition. Nevertheless, the showing establishes, to the satisfaction of the Commissioner, that the requested filing date is the date the correspondence was deposited in "Express Mail Post Office to Addressee" service.

In view of the above, the application is **granted**. The Office of Initial Patent Examination is directed to change the filing date to August 22, 2003, and mail a corrected filing receipt to petitioner.

Telephone inquiries should be directed to the undersigned at (703) 306-5589.

Christina Tartera Donnell

Christina Tartera Donnell
Senior Petitions Attorney
Office of Petitions

Attorney Docket No. 9400-44 PATENT

IN THE UNITED STATES PATENT AND TRADEMARK OFFICE

In re: Wei Zhao et al.
Serial No.: 10/646,962 Examiner: Unassigned
Filed: August 22, 2003 Group Art Unit: Unassigned
For: METHODS, SYSTEMS AND COMPUTER PROGRAM PRODUCTS FOR DIRECTING A USER TO A WIRELESS NETWORK ACCESS POINT

RECEIVED
OCT 21 2003
OFFICE OF PETITIONS

October 20, 2003

Office of Patent Legal Administration
Commissioner for Patents
P.O. Box 1450
Alexandria, VA 22313-1450

PETITION TO ACCORD THE PROPER FILING DATE

Sir:

As set forth in 37 CFR § 1.10(c) and MPEP § 506.02, Applicant hereby petitions to grant the proper filing date of **August 22, 2003** rather than **August 25, 2003** for the above-identified patent application as this was the date the application was deposited as "Express Mail" in the U.S. Postal Service. The following is enclosed as evidence of **August 22, 2003** being the correct filing date for the application which was properly filed under 37 C.F.R. § 1.10:

1. A true and accurate copy of the Cover Sheet for the Application showing the Express Mail signature and date on Page 2;

2. A true and accurate copy of the Express Mail Receipt marked by the United States Postal Service ("USPS") as a "date-in" or deposit date with the USPS of 5:44 p.m. on **August 22, 2003**; and

3. A true and accurate copy of our return post card sent by the United States Patent and Trademark Office, showing that Applicant was improperly given the filing date of **August 25, 2003** instead of the Express Mail date of **August 22, 2003**.

This petition is being filed promptly after Applicant became aware of the improperly accorded filing date. Accordingly, Applicant respectfully requests the granting of **August 22, 2003** as the filing date pursuant to 37 CFR § 1.10.

On the basis that Applicant properly followed the requirements of 37 CFR § 1.10 and the USPTO failed to accord the proper filing date under MPEP § 505 and thus the need to file this petition is due to error on the part of the USPTO, it is applicant's belief that no fee is due with this petition. However, the Commissioner is authorized to charge any deficiency or credit any overpayment to Deposit Account No. 50-0220.

Respectfully submitted,

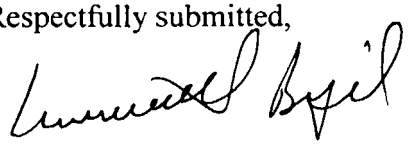

Mitchell S. Bigel
Registration No. 29,614

USPTO Customer No. 39072
Myers Bigel Sibley & Sajovec
Post Office Box 37428
Raleigh, North Carolina 27627
Telephone: 919/854-1400
Facsimile: 919/854-1401

UNITED STATES PATENT AND TRADEMARK OFFICE

UNITED STATES DEPARTMENT OF COMMERCE
United States Patent and Trademark Office
Address: COMMISSIONER FOR PATENTS
P.O. Box 1450
Alexandria, Virginia 22313-1450
www.uspto.gov

APPL NO.	FILING OR 371 (c) DATE	ART UNIT	FIL FEE REC'D	ATTY.DOCKET NO	DRAWINGS	TOT CLMS	IND CLMS
10/646,963	08/22/2003	2876	1632	5577-268	8	41	9

CONFIRMATION NO. 3024

CORRECTED FILING RECEIPT

20792
MYERS BIGEL SIBLEY & SAJOVEC
PO BOX 37428
RALEIGH, NC 27627

OC000000011822899

Date Mailed: 02/03/2004

Receipt is acknowledged of this regular Patent Application. It will be considered in its order and you will be notified as to the results of the examination. Be sure to provide the U.S. APPLICATION NUMBER, FILING DATE, NAME OF APPLICANT, and TITLE OF INVENTION when inquiring about this application. Fees transmitted by check or draft are subject to collection. Please verify the accuracy of the data presented on this receipt. **If an error is noted on this Filing Receipt, please write to the Office of Initial Patent Examination's Filing Receipt Corrections, facsimile number 703-746-9195. Please provide a copy of this Filing Receipt with the changes noted thereon. If you received a "Notice to File Missing Parts" for this application, please submit any corrections to this Filing Receipt with your reply to the Notice. When the USPTO processes the reply to the Notice, the USPTO will generate another Filing Receipt incorporating the requested corrections (if appropriate).**

Applicant(s)

David G. Kuehr-McLaren, Apex, NC;
Mark E. Peters, Chapel Hill, NC;

Domestic Priority data as claimed by applicant

Foreign Applications

If Required, Foreign Filing License Granted: 11/14/2003

Projected Publication Date: 02/24/2005

Non-Publication Request: No

Early Publication Request: No

Title

Methods, systems and computer program products for communicating product status information

Preliminary Class

235

LICENSE FOR FOREIGN FILING UNDER
Title 35, United States Code, Section 184
Title 37, Code of Federal Regulations, 5.11 & 5.15

GRANTED

The applicant has been granted a license under 35 U.S.C. 184, if the phrase "IF REQUIRED, FOREIGN FILING LICENSE GRANTED" followed by a date appears on this form. Such licenses are issued in all applications where the conditions for issuance of a license have been met, regardless of whether or not a license may be required as set forth in 37 CFR 5.15. The scope and limitations of this license are set forth in 37 CFR 5.15(a) unless an earlier license has been issued under 37 CFR 5.15(b). The license is subject to revocation upon written notification. The date indicated is the effective date of the license, unless an earlier license of similar scope has been granted under 37 CFR 5.13 or 5.14.

This license is to be retained by the licensee and may be used at any time on or after the effective date thereof unless it is revoked. This license is automatically transferred to any related applications(s) filed under 37 CFR 1.53(d). This license is not retroactive.

The grant of a license does not in any way lessen the responsibility of a licensee for the security of the subject matter as imposed by any Government contract or the provisions of existing laws relating to espionage and the national security or the export of technical data. Licensees should apprise themselves of current regulations especially with respect to certain countries, of other agencies, particularly the Office of Defense Trade Controls, Department of State (with respect to Arms, Munitions and Implements of War (22 CFR 121-128)); the Office of Export Administration, Department of Commerce (15 CFR 370.10 (j)); the Office of Foreign Assets Control, Department of Treasury (31 CFR Parts 500+) and the Department of Energy.

NOT GRANTED

No license under 35 U.S.C. 184 has been granted at this time, if the phrase "IF REQUIRED, FOREIGN FILING LICENSE GRANTED" DOES NOT appear on this form. Applicant may still petition for a license under 37 CFR 5.12, if a license is desired before the expiration of 6 months from the filing date of the application. If 6 months has lapsed from the filing date of this application and the licensee has not received any indication of a secrecy order under 35 U.S.C. 181, the licensee may foreign file the application pursuant to 37 CFR 5.15(b).

UNITED STATES PATENT AND TRADEMARK OFFICE

Commissioner for Patents
United States Patent and Trademark Office
P.O. Box 1450
Alexandria, VA 22313-1450
www.uspto.gov

TRASK BRITT
P.O. BOX 2550
SALT LAKE CITY UT 84110

COPY MAILED

DEC 0 3 2004

OFFICE OF PETITIONS

In re Application of :
Daniel W. Doll et al :
Application No. 10/646,965 : ON PETITION
Filed: August 22, 2003 :
Attorney Docket No. 2507-5791.2US(21773-US-0) :

This is a decision on the petition, filed November 23, 2004, under 37 CFR 1.313(c)(3) to withdraw the above-identified application from issue after payment of the issue fee.

The petition is **GRANTED**.

The above-identified application is withdrawn from issue for express abandonment. See 37 CFR 1.313(c)(3).

The application is hereby withdrawn from issue, and the abandonment is hereby recognized.

Telephone inquiries should be directed to the undersigned at (571) 272-3208.

The application is being referred to Files Repository.

Karen Creasy

Karen Creasy
Petitions Examiner
Office of Petitions
Office of the Deputy Commissioner
for Patent Examination Policy

UNITED STATES PATENT AND TRADEMARK OFFICE

Commissioner for Patents
United States Patent and Trademark Office
P.O. Box 1450
Alexandria, VA 22313-1450
www.uspto.gov

OCT 08 2004

COCHRAN FREUND & YOUNG LLC
3555 STANFORD ROAD
SUITE 230
FORT COLLINS CO 80525

In re Application	:	
Mark L. Iske, et al	:	
Serial No.: 10/646,968	:	DECISION ON PETITION
Filed: August 22, 2003	:	
For: Spring-actuated, retractable-bladed Surgical scalpel	:	

This is in response to applicants' petition filed May 12, 2004, to make the above-identified application special under the provisions of 37 CFR 1.102(c), based on the age of the applicant.

Applicant has satisfied the provisions set forth in M.P.E.P. 708.02, IV. Therefore the petition is **GRANTED**.

The application will be forwarded to the examiner for action on the merits commensurate with this decision.

Should there be any questions with regard to this letter please contact John Kittle by letter addressed to the Director, Technology Center 3700/2900, P.O. Box 1450 Alexandria, VA 22313-1450, or by telephone at (703) 308-0873 or by facsimile transmission at (703) 308-3139.

John E. Kittle
Director
Technology Center 3700/2900

UNITED STATES PATENT AND TRADEMARK OFFICE

Commissioner for Patents
United States Patent and Trademark Office
P.O. Box 1450
Alexandria, VA 22313-1450
www.uspto.gov

SoCAL IP LAW GROUP LLP
310 N. WESTLAKE BLVD. STE 120
WESTLAKE VILLAGE CA 91362

COPY MAILED
NOV 24 2008

In re Application of :
Clifford Hannel et al. :
Application No. 10/646,983 : DECISION ON PETITION
Filed: August 21, 2003 : TO MAKE SPECIAL UNDER
Attorney Docket No. I004-P03079US : 37 CFR 1.102(d)
:

This is a decision on the petition under 37 CFR §1.102(d), filed May 10, 2004, to make the above-identified application special based on actual infringement as set forth in M.P.E.P. § 708.02, Section II.

The petition is **GRANTED.**

A grantable petition to make an application special under 37 CFR §1.102(d) and MPEP §708.02, Section II: Infringement, must be accompanied by the required fee pursuant to 37 CFR 1.17(h) and a statement by the applicant, assignee, or attorney/agent registered to practice before the office alleging:

> (A) That there is an infringing device or product actually on the market or method in use;
>
> (B) That a rigid comparison of the alleged infringing device, product, or method with the claims of the application has been made, and that, in his or her opinion, some of the claims are unquestionably infringed; and
>
> (C) That he or she has made or caused to be made a careful and thorough search of the prior art or has a good knowledge of the pertinent prior art.
>
> Applicant must provide one copy of each of the references deemed most closely related to the subject matter encompassed by the claims if said references are not already of record.

The petition complies with all the above stated requirements. Accordingly, the above-identified application has been accorded "special" status

Telephone inquiries concerning this decision should be directed to K. Reichle at 571-272-6051.

All other inquiries concerning either the examination or status of the application should be directed to the Technology Center.

The application is being forwarded to the Technology Center Art Unit 2154 for action on the merits commensurate with this decision.

David Bucei
Petitions Examiner
Office of Petitions

UNITED STATES PATENT AND TRADEMARK OFFICE

COMMISSIONER FOR PATENTS
UNITED STATES PATENT AND TRADEMARK OFFICE
P.O. BOX 1450
ALEXANDRIA, VA 22313-1450
www.uspto.gov

Charles E. Baxley
90 John Street - 3rd Floor
New York, New York 10038

COPY MAILED

AUG 0 4 2005

OFFICE OF PETITIONS

In re Application of:
YU, Hsi Hui
Application No.: 10/646,986
Filing Date: August 20, 2003
Attorney's Docket No.: 015411 B (4062 CG)
For: SAW MACHINE HAVING TWO SAW BLADES

DECISION ON PETITION FOR REVIVAL OF ABANDONED APPLICATION UNDER 37 CFR 1.137(b)

This is a decision on the petition under 37 CFR 1.137(b), filed March 22, 2005 to revive the above-entitled application.

The petition is **GRANTED**.

The above-identified application became abandoned for failure to file a proper reply in a timely manner to the non-final Office action mailed July 2, 2004, which set a shortened statutory period for reply of three (3) months. A response was not filed and no extensions of time under the provisions of 37 CFR 1.136(a) were obtained. Accordingly, this application became abandoned at midnight on October 2, 2004.

The present petition satisfies the conditions for revival pursuant to the provisions of 37 CFR 1.137(b) in that (1) the reply in the form of a response to the Office action mailed July 2, 2004; (2) the petition fee; and (3) the required statement of unintentional delay have been received. Accordingly, the reply to the Office action of July 2, 2004 is accepted as having been unintentionally delayed.

Telephone inquiries concerning this decision should be directed to Attorney-Advisor, Anthony Smith at (571) 272-3298 or in his absence, the undersigned at (571) 272-3217.

The application is being referred back to Technology Center AU 3724 further processing.

Brian Hearn
Petitions Examiner
Office Of Petitions

UNITED STATES PATENT AND TRADEMARK OFFICE

COMMISSIONER FOR PATENTS
UNITED STATES PATENT AND TRADEMARK OFFICE
P.O. BOX 1450
ALEXANDRIA, VA 22313-1450
www.uspto.gov

HUFFMAN LAW GROUP, P.C.
1900 MESA AVE.
COLORADO SPRINGS CO 80906

COPY MAILED

MAY 04 2007

OFFICE OF PETITIONS

In re Application of :
Gaskins et al. :
Application No. 10/646,988 : DECISION ON PETITION
Filed: August 22, 2003 : UNDER 37 CFR 1.78(a)(6)
Attorney Docket No. CNTR.2209 :

This is a decision on the petitions under 37 CFR §1.78(a)(6), filed January 8, 2007, to accept an unintentionally delayed claim under 35 U.S.C. §119(e) for the benefit of the prior-filed provisional application No. 60/415,942, as set forth in the concurrently filed amendment. This decision is drafted in light of the clarification filed April 25, 2007, confirming that the claim is under §119(e) and not §120.

The petition is **GRANTED**.

A petition for acceptance of a claim for late priority under 37 CFR § 1.78(a)(6) is only applicable to those applications filed on or after November 29, 2000. Further, the petition is appropriate only after the expiration of the period specified in 37 CFR §§ 1.78(a)(5)(ii). In addition, the petition under 37 CFR § 1.78(a)(6) must be accompanied by:

(1) the reference required by 35 U.S.C. §119(e) and 37 CFR § 1.78(a)(5)(i) of the prior-filed application, unless previously submitted;
(2) the surcharge set forth in § 1.17(t); and
(3) a statement that the entire delay between the date the claim was due under 37 CFR §§ 1.78(a)(5)(ii) and the date the claim was filed was unintentional. The Director may require additional where there is a question whether the delay was unintentional.

This nonprovisional application was pending at the time of filing of the reference to the prior-filed provisional application as required by 37 CFR 1.78(a)(5)(ii). Additionally, this application was filed within twelve months of the filing date of the prior-filed provisional application, Application No. 60/415,942, which was filed on October 3, 2002, for which priority is claimed.

A reference to the prior-filed provisional application has been included in an amendment to the first sentence of the specification following the title, as required by 37 CFR 1.78(a)(5)(iii). However, a final Office action was mailed in this application on October 18, 2006. To reopen prosecution for consideration of this amendment, petitioner has submitted a Request for Continued Examination (RCE) and fee. (It is noted that the RCE and submission serve as a timely and complete response to the Notice of Allowance).

All of the above requirements having been satisfied, the late claim for benefit of priority to the prior-filed applications under 35 U.S.C. § 119(e) is accepted as being unintentionally delayed.

The granting of the petition to accept the delayed benefit claim to the prior-filed application under 37 CFR §1.78(a)(6) should not be construed as meaning that this application is entitled to the benefit of the filing date of the prior-filed application. In order for this application to be entitled to the benefit of the prior-filed application, all other requirements under 35 U.S.C. §119(e) and 37 CFR 1.78(a)(4) and (a)(5) must be met. Similarly, the fact that the corrected Filing Receipt accompanying this decision on petition includes the prior-filed application should not be construed as meaning that applicant is entitled to the claim for benefit of priority to the prior-filed application noted thereon. Accordingly, the examiner will, in due course, consider this benefit claim and determine whether the application is entitled to the benefit of the earlier filing date.

A corrected Filing Receipt, which includes the priority claim to the prior-filed application, accompanies this decision on petition.

Any questions concerning this matter may be directed to Nancy Johnson, Senior Petitions Attorney, at (571) 272-3219. All other inquiries concerning either the examination procedures or

status of the application should be directed to the Technology Center.

This application is being referred to Technology Center Art Unit 2115 for consideration by the examiner of the claim for benefit of priority under 35 U.S.C. §119(e) of the prior-filed provisional application.

Nancy Johnson
Senior Petitions Attorney
Office of Petitions

ATTACHMENT : Corrected Filing Receipt

UNITED STATES PATENT AND TRADEMARK OFFICE

UNITED STATES DEPARTMENT OF COMMERCE
United States Patent and Trademark Office
Address: COMMISSIONER FOR PATENTS
P.O. Box 1450
Alexandria, Virginia 22313-1450
www.uspto.gov

APPL NO.	FILING OR 371(c) DATE	ART UNIT	FIL FEE REC'D	ATTY.DOCKET NO	TOT CLMS	IND CLMS
10/646,988	08/22/2003	2115	786	CNTR.2209	22	3

CONFIRMATION NO. 1141

CORRECTED FILING RECEIPT

OC000000023676535

23669
HUFFMAN LAW GROUP, P.C.
1900 MESA AVE.
COLORADO SPRINGS, CO 80906

Date Mailed: 05/03/2007

Receipt is acknowledged of this regular Patent Application. It will be considered in its order and you will be notified as to the results of the examination. Be sure to provide the U.S. APPLICATION NUMBER, FILING DATE, NAME OF APPLICANT, and TITLE OF INVENTION when inquiring about this application. Fees transmitted by check or draft are subject to collection. Please verify the accuracy of the data presented on this receipt. **If an error is noted on this Filing Receipt, please mail to the Commissioner for Patents P.O. Box 1450 Alexandria Va 22313-1450. Please provide a copy of this Filing Receipt with the changes noted thereon. If you received a "Notice to File Missing Parts" for this application, please submit any corrections to this Filing Receipt with your reply to the Notice. When the USPTO processes the reply to the Notice, the USPTO will generate another Filing Receipt incorporating the requested corrections (if appropriate).**

Applicant(s)

Darius D. Gaskins, Austin, TX;
G. Glenn Henry, Austin, TX;

Assignment For Published Patent Application

IP-First LLC, Freemont, CA

Power of Attorney: The patent practitioners associated with Customer Number **23669**.

Domestic Priority data as claimed by applicant

This appln claims benefit of 60/415,942 10/03/2002

Foreign Applications

If Required, Foreign Filing License Granted: 11/15/2003

The country code and number of your priority application, to be used for filing abroad under the Paris Convention, is US10/646,988

Projected Publication Date: Not Applicable

Non-Publication Request: No

Early Publication Request: No

Title

Resource utilization mechanism for microprocessor power management

Preliminary Class

713

PROTECTING YOUR INVENTION OUTSIDE THE UNITED STATES

Since the rights granted by a U.S. patent extend only throughout the territory of the United States and have no effect in a foreign country, an inventor who wishes patent protection in another country must apply for a patent in a specific country or in regional patent offices. Applicants may wish to consider the filing of an international application under the Patent Cooperation Treaty (PCT). An international (PCT) application generally has the same effect as a regular national patent application in each PCT-member country. The PCT process **simplifies** the filing of patent applications on the same invention in member countries, but **does not result** in a grant of "an international patent" and does not eliminate the need of applicants to file additional documents and fees in countries where patent protection is desired.

Almost every country has its own patent law, and a person desiring a patent in a particular country must make an application for patent in that country in accordance with its particular laws. Since the laws of many countries differ in various respects from the patent law of the United States, applicants are advised to seek guidance from specific foreign countries to ensure that patent rights are not lost prematurely.

Applicants also are advised that in the case of inventions made in the United States, the Director of the USPTO must issue a license before applicants can apply for a patent in a foreign country. The filing of a U.S. patent application serves as a request for a foreign filing license. The application's filing receipt contains further information and guidance as to the status of applicant's license for foreign filing.

Applicants may wish to consult the USPTO booklet, "General Information Concerning Patents" (specifically, the section entitled "Treaties and Foreign Patents") for more information on timeframes and deadlines for filing foreign patent applications. The guide is available either by contacting the USPTO Contact Center at 800-786-9199, or it can be viewed on the USPTO website at http://www.uspto.gov/web/offices/pac/doc/general/index.html.

For information on preventing theft of your intellectual property (patents, trademarks and copyrights), you may wish to consult the U.S. Government website, http://www.stopfakes.gov. Part of a Department of Commerce initiative, this website includes self-help "toolkits" giving innovators guidance on how to protect intellectual property in specific countries such as China, Korea and Mexico. For questions regarding patent enforcement issues, applicants may call the U.S. Government hotline at 1-866-999-HALT (1-866-999-4158).

LICENSE FOR FOREIGN FILING UNDER
Title 35, United States Code, Section 184
Title 37, Code of Federal Regulations, 5.11 & 5.15

GRANTED

The applicant has been granted a license under 35 U.S.C. 184, if the phrase "IF REQUIRED, FOREIGN FILING LICENSE GRANTED" followed by a date appears on this form. Such licenses are issued in all applications where the conditions for issuance of a license have been met, regardless of whether or not a license may be required as set forth in 37 CFR 5.15. The scope and limitations of this license are set forth in 37 CFR 5.15(a) unless an earlier license has been issued under 37 CFR 5.15(b). The license is subject to revocation upon written notification. The date indicated is the effective date of the license, unless an earlier license of similar scope has been granted under 37 CFR 5.13 or 5.14.

This license is to be retained by the licensee and may be used at any time on or after the effective date thereof unless it is revoked. This license is automatically transferred to any related applications(s) filed under 37 CFR 1.53(d). This license is not retroactive.

The grant of a license does not in any way lessen the responsibility of a licensee for the security of the subject matter as imposed by any Government contract or the provisions of existing laws relating to espionage and the national security or the export of technical data. Licensees should apprise themselves of current regulations especially with respect to certain countries, of other agencies, particularly the Office of Defense Trade Controls, Department of State (with respect to Arms, Munitions and Implements of War (22 CFR 121-128)); the Bureau of Industry and Security, Department of Commerce (15 CFR parts 730-774); the Office of Foreign Assets Control, Department of Treasury (31 CFR Parts 500+) and the Department of Energy.

NOT GRANTED

No license under 35 U.S.C. 184 has been granted at this time, if the phrase "IF REQUIRED, FOREIGN FILING LICENSE GRANTED" DOES NOT appear on this form. Applicant may still petition for a license under 37 CFR 5.12, if a license is desired before the expiration of 6 months from the filing date of the application. If 6 months has lapsed from the filing date of this application and the licensee has not received any indication of a secrecy order under 35 U.S.C. 181, the licensee may foreign file the application pursuant to 37 CFR 5.15(b).

SPE RESPONSE FOR CERTIFICATE OF CORRECTION

Paper No.: _____

DATE : 1/29/09

TO SPE OF : ART UNIT 2625

SUBJECT : Request for Certificate of Correction for Appl. No.: 10646993 Patent No.: 7408673 B1

Please respond to this request for a certificate of correction within 7 days.

FOR IFW FILES:

Please review the requested changes/corrections as shown in the COCIN document(s) in the IFW application image. No new matter should be introduced, nor should the scope or meaning of the claims be changed.

Please complete the response (see below) and forward the completed response to scanning using document code COCX.

FOR PAPER FILES:

Please review the requested changes/corrections as shown in the attached certificate of correction. Please complete this form (see below) and forward it with the file to:

Certificates of Correction Branch (CofC)
South Tower - 9A22
Palm Location 7580

You can fax the Directors/SPE response to 571-270-9990

Lamonte M. Newsome
Certificates of Correction Branch
703-308-9390 ext. 112

Thank You For Your Assistance

The request for issuing the above-identified correction(s) is hereby:
Note your decision on the appropriate box.

☒	Approved	All changes apply.
☐	Approved in Part	Specify below which changes do not apply.
☐	Denied	State the reasons for denial below.

Comments: No new matter has been introduced nor has the scope of the meanings of the claims been changed by the corrections requested by the Applicant.

/Edward L Coles/
SPE

2625
Art Unit

UNITED STATES PATENT AND TRADEMARK OFFICE

Commissioner for Patents
United States Patent and Trademark Office
P.O. Box 1450
Alexandria, VA 22313-1450
www.uspto.gov

FISH & RICHARDSON P.C.
P.O. Box 1022
MINNEAPOLIS MN 55440-1022

COPY MAILED

AUG 18 2009

OFFICE OF PETITIONS

In re Patent No. 7,408,673	: ON PETITION
Chinn et al.	: UNDER 37 CFR 1.183
Issue Date: 08/05/2008	: and
Application No. 10/646993	: ON APPLICATION FOR
Filed: 08/21/2003	: PATENT TERM ADJUSTMENT
Attorney Docket No. 07844-599001 / P552	:

This is a decision on the 1) Petition under 37 C.F.R. 1.183, requesting that the Office suspend the rules and consider on the merits an Application for Patent Term Adjustment under 37 C.F.R. 1.705(d) filed more than two months from the date the above-referenced patent issued; and on the 2) Application for Patent Term Adjustment under 37 C.F.R. 1.705(d), requesting reconsideration of the Patent Term Adjustment, both of which were filed on December 22, 2008.

The petition under 37 CFR 1.183 is **dismissed**.

The application for patent term adjustment under 37 CFR 1.705(d) is **dismissed as untimely filed**.

Any request for reconsideration, whether directed to the decision on petition under 37 CFR 1.183 or to the decision on application for patent term adjustment under 37 CFR 1.705(d), must be filed within two months of the mailing date of this decision. Extensions of time under 37 CFR 1.136 are not permitted. See § 1.181(f).

BACKGROUND

On August 5, 2008, the above-identified application matured into U.S. Patent No. 7,408,673, with a revised patent term adjustment of 987 days. No request for reconsideration of the patent term adjustment indicated in the patent was filed within two months of the date the patent issued. Patentee now petitions under 37 C.F.R. § 1.183 to (i) suspend or waive the requirement of 37 C.F.R. § 1.705(d) that a Request for Reconsideration of Patent Term Adjustment be filed within two months of the date the patent issued; and (ii) consider the enclosed Request for Reconsideration of Patent Term Adjustment. Patentee references the recent decision in Wyeth v. Dudas, No. 07-1492 (D.D.C. Sept. 30, 2008) as the basis for the petition.

ON PETITION UNDER 37 CFR 1.183 TO WAIVE THE TWO-MONTH REQUIREMENT OF 37 CFR 1.705(d)

The above-referenced patent issued on August 5, 2008. A request for reconsideration of the patent term adjustment indicated in the patent was not filed until December 22, 2008. Petitioner requests that the Office suspend the rules and consider on the merits the Request for Reconsideration of Patent Term Adjustment under 37 C.F.R. 1.705(d) even though it was untimely filed more than two months from the date the patent issued.

The relevant regulation, 37 CFR 1.705(d), provides that:

> If there is a revision to the patent term adjustment indicated in the notice of allowance, the patent will indicate the revised patent term adjustment. If the patent indicates or should have indicated a revised patent term adjustment, *any request for reconsideration of the patent term adjustment indicated in the patent must be filed within two months of the date the patent issued* and must comply with the requirements of paragraphs (b)(1) and (b)(2) of this section. Any request for reconsideration under this section that raises issues that were raised, or could have been raised, in an application for patent term adjustment under paragraph (b) of this section shall be dismissed as untimely as to those issues. (*emphasis* added).

By the express provisions of 37 CFR 1.705(d), a request for reconsideration of patent term adjustment must be filed within two months of the date the patent issued. It is undisputed that no such request for reconsideration was filed by October 5, 2008, the date two months from the date this patent issued, August 5, 2008. Rather, on December 22, 2008, nearly three months after the issuance of a decision in Wyeth v. Dudas on September 30, 2008, petitioner filed the instant request for waiver of the two-month requirement.

37 CFR 1.183 provides that:

> In an extraordinary situation, when justice requires, any requirement of the regulations in this part which is not a requirement of the statutes may be suspended or waived by the Director or the Director's designee, sua sponte, or on petition of the interested party, subject to such other requirements as may be imposed. Any petition under this section must be accompanied by the petition fee set forth in § 1.17(f).

35 U.S.C. 154, requires the Office to provide the applicant one opportunity to request reconsideration of any patent term adjustment determination made by the Director, authorizes the Director to establish the procedures for requesting such reconsideration. Those procedures[1] include pursuant to 37 CFR 1.705(d) setting a two-month period for filing a request for reconsideration of the revised patent term adjustment indicated in the patent.

---

[1] 35 U.S.C. § 154(b)(3) provides that the USPTO shall: (1) prescribe regulations establishing procedures for the application for and determination of patent term adjustments under 35 U.S.C. § 154(b); (2) make a determination of any patent term adjustment under 35 U.S.C. § 154(b) and transmit a notice of that determination with the notice of allowance under 35 U.S.C. § 151; and (3) provide the applicant one opportunity to request reconsideration of any patent term adjustment determination. Pursuant to the mandate and authority in 35 U.S.C. § 154(b)(3), the USPTO promulgated 37 C.F.R. § 1.705, which provides that: (1) the notice of allowance will include notification of any

Having considered petitioner's arguments, it is concluded that waiver of the two-month requirement is not warranted. The primary basis for requesting waiver set forth by petitioner is "the extraordinary situation presented by the recent decision in Wyeth v. Dudas, No. 07-1492 (D.D.C. Sept. 30, 2008)." Specifically, petitioner states that in Wyeth, the U.S. District Court for the District of Columbia held that contrary to USPTO practice, a patentee is entitled to Patent Term Adjustment credit for examination delay under 37 CFR 1.702(b) in addition to any examination delay under 37 CFR 1.702(a), to the extent that the two periods of delay "do not occur on the same calendar day or days." Petitioner argues that they could not have filed a Request for Reconsideration of Patent Term Adjustment within two months of the date the above-referenced patent issued because the basis for the Request for Reconsideration of Patent Term Adjustment is the Wyeth decision, which was entered more than two months after the issuance of their patent. Further, petitioner argues that waiver is warranted as although the request for reconsideration is being filed outside of the two-month period, because of the change in the law, which occurred more than one month after the patent issued, petitioner could not reasonably have timely presented a request for reconsideration of the patent term adjustment.

Petitioner has not explained why it could not have filed a Request for Reconsideration of Patent Term Adjustment within two months of the date the above-referenced patent issued. Apparently, petitioner's argument is that the basis for the Request for Reconsideration of Patent Term Adjustment is the Wyeth decision, which was entered nearly two months after the issuance of their patent.

The fact that any relief ultimately granted in Wyeth would benefit patentee had they timely filed a request for reconsideration does not make the situation extraordinary. Wyeth followed the procedure set forth in 37 CFR 1.705 for requesting reconsideration of the patent term adjustment determination. Then, pursuant to 35 U.S.C. 154(b)(4)(A), Wyeth timely filed a complaint in District Court seeking judicial review of the Office's decision. A Memorandum Opinion and Order, the Wyeth decision of September 30, 2008, directed to the parties involved was issued.

Petitioner chose not to challenge their revised patent term adjustment within the two-month period. Petitioner's argument that they could not have filed a Request for Reconsideration of Patent Term Adjustment within two months of the date the above-referenced patent issued because the basis for the Request for Reconsideration of Patent Term Adjustment is the Wyeth decision, which was entered nearly two months after the issuance of their patent, is not persuasive.

---

patent term adjustment under 35 U.S.C. § 154(b)(37 C.F.R. § 1.705(a)); (2) any request for reconsideration of the patent term adjustment indicated in the notice of allowance (except as provided in 37 C.F.R. § 1.705(d)) must be by way of an application for patent term adjustment filed no later than the payment of the issue fee and accompanied by (inter alia) the fee set forth in 37 C.F.R. § 1.18(e)(37 C.F.R. § 1.705(b)); and (3) if the patent indicates or should have indicated a revised patent term adjustment, any request for reconsideration of the patent term adjustment indicated in the patent must be filed within two months of the date the patent issued.

Petitioner could have filed a Request for Reconsideration of Patent Term Adjustment as Wyeth did. It is acknowledged that petitioner may have chosen not to file a request for reconsideration based on a conclusion that the Office's interpretation of 35 U.S.C. § 154(b)(2)(A) was correct. Nonetheless, the fact that the District Court has now issued an Opinion contrary to the Office's interpretation does not make the situation extraordinary. This is not unlike any other situation where a patentee (or applicant) challenges a final agency decision and the decision upon judicial review could have had applicability to another patentee (or applicant) had they taken such action. In fact, many patentees may be in the same situation as petitioner with respect to the Wyeth decision. In addition, given that the law only allows 180 days for both the filing of a petition and for the Office's consideration of that petition, petitioner's unexplained more than four-month delay in filing the petition weighs against them.

Petitioner simply fails to articulate how their failure to file a request for reconsideration of patent term adjustment within two months of the issue date of the patent was due to an extraordinary situation. Petitioner cannot rely on Wyeth's actions or the Wyeth decision to establish that their situation was extraordinary.

The contention that a decision is in error is a basis for a timely request for review of the decision but does not justify a delay in seeking review of such decision.

The Office provided notice that petitions under 37 CFR 1.182 and 1.183 or requests for certificate of corrections under 35 USC 354 and 37 CFR 1.323 or 35 U.S.C. 255 and 37 CFR 1.324 are not substitute *fora* to obtain reconsideration of a patent term adjustment determination indicated in a notice of allowance if applicant fails to submit a request for reconsideration within the time period specified in § 1.705(b) or to obtain reconsideration of a patent term adjustment determination indicated in a patent if a patentee fails to submit a request for reconsideration within the time period specified in § 1.705(d). See 69 Fed. Reg. 21704, 21707 (April, 22, 2004).

In view thereof, the petition under 37 CFR 1.183 for waiver of the two-month requirement of 37 CFR 1.705(d) is **dismissed**.

Accordingly, consideration now turns to the Application for Patent Term Adjustment under 37 CFR 1.705(d).

ON REQUEST FOR RECONSIDERATION OF PATENT TERM ADJUSTMENT UNDER 37 CFR 1.705(d)

This is a decision on the "APPLICATION FOR PATENT TERM ADJUSTMENT UNDER 37 CFR 1.705(d)," filed December 22, 2008. Therein, patentee requests correction of the patent term adjustment (PTA) indicated in the patent to 1384 days.

On August 5, 2008, the above-identified application matured into U.S. Patent No. 7,408,673 with a revised patent term adjustment of 987 days. The instant request for reconsideration was filed more than four months after the issuance of the patent, on December 22, 2008.

No error in the printing of the patent has been shown. The patent term adjustment indicated on the patent reflects the Office's determination of patent term adjustment shown in the PAIR system for this application. 37 CFR 1.705(d) provides the sole avenue before the Office for requesting reconsideration of the Office's determination of patent term adjustment indicated in the patent. Moreover, § 1.705(d) states that "any request for reconsideration of the patent term adjustment indicated in the patent must be filed within two months of the date the patent issued and must comply with the requirements of paragraphs (b)(1) and (b)(2) of this section." Since the request was not filed within two months of the issue date of the patent, the request is properly **dismissed as untimely filed**.

CONCLUSION

It is determined that waiver of the requirement pursuant to 37 CFR 1.183 is not warranted. Accordingly, the request for reconsideration of the patent term adjustment under 37 CFR 1.705(d) filed more than two months after the issue date of the patent is dismissed as untimely filed.

Receipt of the fees required for the petition under 37 CFR 1.183 and the application for patent term adjustment is acknowledged.

The application file does not indicate a change of address has been filed in this case, although the address given on the petition differs from the address of record. A change of address should be filed in this case in accordance with MPEP 601.03. A courtesy copy of this decision is being mailed to the address noted on the petition. However, until otherwise instructed, all future correspondence regarding this application will be mailed solely to the address of record. Applicant is advised that, in patented files: requests for changes of correspondence address, powers of attorney, revocations of powers of attorney, withdrawal of attorney and submissions under 37 CFR 1.501: Designation of, or changes to, a fee address, should be addressed to Mail Stop M Correspondence.

Telephone inquiries specific to this matter should be directed to Derek Woods, Attorney, Office of Petitions, at (571) 272-3232.

Alesia Brown
Senior Petitions Attorney
Office of Petitions
Office of the Deputy Commissioner
for Patent Examination Policy

CC: FISH & RICHARDSON, P.C.
1717 MAIN STREET
SUITE 5000
DALLAS, TX 75201

UNITED STATES PATENT AND TRADEMARK OFFICE

Commissioner for Patents
United States Patent and Trademark Office
P.O. Box 1450
Alexandria, VA 22313-1450
www.uspto.gov

COHEN, PONTANI, LIEBERMAN & PAVANE
551 FIFTH AVENUE
SUITE 1210
NEW YORK NY 10176

COPY MAILED

MAY 19 2008

OFFICE OF PETITIONS

In re Patent No. 7,042,013 :
Issued May 9, 2006 :
Application Number: 10/647,000 : DECISION ON PETITION
Filing Date: August 22, 2003 :
Attorney Docket Number: **5367-40** :

This is a decision on the petition under 37 CFR 1.323 filed December 14, 2006 for a certificate of correction to correct the name of the assignee.

The petition is **DISMISSED**.

Assignment data printed on the patent is based solely on the information so supplied on the Issue Fee Transmittal Form (PTOL-85B). A review of the record indicates that the Issue Fee Transmittal Form (PTOL-85B) submitted February 2, 2006, incorrectly identified the assignee. However, the granting of a request under 37 CFR 3.81 (b)[1] is required to correct applicant's error providing incorrect or erroneous assignment date, before issuance of a Certificate of Correction, under 37 CFR 1.323 (see Manual of Patent Examining Procedures (M.P.E.P.) Chp.1400, sect. 1481). This procedure is required at any time after the issue fee is paid, including after issuance of the patent.

Additionally, petitioner must provide a statement that the failure to include the correct assignee name on the PTO)L-85B was inadvertent and include a copy of the notice of Recordation of Assignment Document, reflecting the real and frame number where the assignment(s) is recorded and/or reflecting proof of the date the assignment was submitted for recordation.

---

[1]Any request for issuance of an application in the name of the assignee submitted after the date of the payment of the issue fee, and any request that a patent be corrected to state the name of assignee must:

(A) state the assignment was submitted for recordation as set forth in 37 CFR §3.11 before issuance of the patent;
(B) provide a request for a certificate of correction §1.323;
(C) provide the fee set forth in 37 CFR §1.20 (a) and
(D) provide the processing fee set forth in 37 CFR §1.17(i)

The instant petition was not submitted with a petition under 37 CFR 3.81(b) and thus cannot be granted.

Any request for reconsideration under 37 CFR 3.81(b) should be filed within **TWO MONTHS** of the date of this decision in order to be considered timely. This time period may not be extended pursuant to 37 CFR 1.136.

Further correspondence with respect to this matter should be addressed as follows:

By mail: Mail Stop Petitions
Commissioner for Patents
P.O. Box 1450
Alexandria, VA 22313-1450

By FAX: (571) 273-8300
Office of Petitions

Telephone inquiries regarding this decision should be directed to the undersigned Petitions Attorney at (571) 272-3212.

Patricia Faison-Ball

Patricia Faison-Ball
Senior Petitions Attorney
Office of Petitions

SPE RESPONSE FOR CERTIFICATE OF CORRECTION

Paper No.: _____

DATE : February 1, 2006

TO SPE OF : ART UNIT 2833

SUBJECT : Request for Certificate of Correction on Patent No.: 6,902,423/Appl.10647001

A response is requested with respect to the accompanying request for a certificate of correction.

Please complete this form and return with file, within **7** days to:
Palm location **7580, Certificates of Correction Branch – South Tower – 9A22**
If response is for an IFW, **return to employee (named below) via PUBSCofC Team in MADRAS.**
With respect to the change(s) requested, correcting Office and/or Applicant's errors, should the patent read as shown in the certificate of correction (COCIN)? No new matter should be introduced, nor should the scope or meaning of the claims be changed.

Magdalene Talley

Thank You For Your Assistance

Certificates of Correction Branch
Tel. No. 703-308-9309 ext. 116

The request for issuing the above-identified correction(s) is hereby:
Note your decision on the appropriate box.

☑ **Approved** — **All** changes apply.

☐ **Approved in Part** — Specify below which changes **do not** apply.

☐ **Denied** — State the reasons for denial below.

Comments:

The request to delete a duplicative line in the patent is approved

P AUSTIN BRADLEY
SUPERVISORY PATENT EXAMINER
TECHNOLOGY CENTER 2800

Paula Bradley — SPE

2833 — Art Unit

PTO/SB/44 (04-05)
Approved for use through 04/30/2007. OMB 0651-0033
U.S. Patent and Trademark Office; U.S. DEPARTMENT OF COMMERCE
Under the Paperwork Reduction Act of 1995, no persons are required to respond to a collection of information unless it displays a valid OMB control number.
(Also Form PTO-1050)

UNITED STATES PATENT AND TRADEMARK OFFICE
CERTIFICATE OF CORRECTION

PATENT NO. : 6,902,423

APPLICATION NO.: 10/647,001

ISSUE DATE : June 7, 2005

INVENTOR(S) : Castaldo, et al.

It is certified that an error appears or errors appear in the above-identified patent and that said Letters Patent is hereby corrected as shown below:

Column 12, lines 27-28, delete "wherein the second body portion is attached to the third portion by a second hinge;"

MAILING ADDRESS OF SENDER (Please do not use customer number below):

Greenberg Traurig, LLP
200 Park Avenue, New York, New York 10166

This collection of information is required by 37 CFR 1.322, 1.323, and 1.324. The information is required to obtain or retain a benefit by the public which is to file (and by the USPTO to process) an application. Confidentiality is governed by 35 U.S.C. 122 and 37 CFR 1.14. This collection is estimated to take 1.0 hour to complete, including gathering, preparing, and submitting the completed application form to the USPTO. Time will vary depending upon the individual case. Any comments on the amount of time you require to complete this form and/or suggestions for reducing this burden, should be sent to the Chief Information Officer, U.S. Patent and Trademark Office, U.S. Department of Commerce, P.O. Box 1450, Alexandria, VA 22313-1450. DO NOT SEND FEES OR COMPLETED FORMS TO THIS ADDRESS. SEND TO: **Attention Certificate of Corrections Branch, Commissioner for Patents, P.O. Box 1450, Alexandria, VA 22313-1450.**

If you need assistance in completing the form, call 1-800-PTO-9199 and select option 2.

JAN 19 2006

UNITED STATES PATENT AND TRADEMARK OFFICE

Commissioner for Patents
United States Patent and Trademark Office
P.O. Box 1450
Alexandria, VA 22313-1450
www.uspto.gov

MOSER, PATTERSON & SHERIDAN
3400 POST OAK BOULEVARD, SUITE 1500
HOUSTON TX 77056-6582

COPY MAILED

APR 27 2005

OFFICE OF PETITIONS

In re Application of	:	
Richard T. Jones	:	
Application No. 10/647,014	:	ON PETITION
Filed: August 22, 2003	:	
Attorney Docket No. WEAT/0416	:	

This is a decision on the petition, filed April 22, 2005, under 37 CFR 1.313(c)(1) to withdraw the above-identified application from issue after payment of the issue fee.

The petition is **GRANTED**.

The above-identified application is withdrawn from issue due to unpatentability of one or more claims. See 37 CFR 1.313(c)(1). See also, 37 CFR 1.4(c).

The application is hereby withdrawn from issue.

Telephone inquiries should be directed to the undersigned at (571) 272-3208.

This matter is being referred to Technology Center AU 2855.

Karen Creasy

Karen Creasy
Petitions Examiner
Office of Petitions
Office of the Deputy Commissioner
for Patent Examination Policy

UNITED STATES PATENT AND TRADEMARK OFFICE

Commissioner for Patents
United States Patent and Trademark Office
P.O. Box 1450
Alexandria, VA 22313-1450
www.uspto.gov

FRISHAUF, HOLTZ, GOODMAN &
CHICK, PC
220 Fifth Avenue
16TH Floor
NEW YORK NY 10001-7708

MAILED

JUN 29 2009

OFFICE OF PETITIONS

In re Patent No. 7,230,023	:	ON PETITION
Mori et al.	:	UNDER 37 CFR 1.183
Issue Date: June 12, 2007	:	and
Application No. 10/647023	:	ON REQUEST FOR RECONSIDERATION
Filed: August 20, 2003	:	OF PATENT TERM ADJUSTMENT
Attorney Docket No.	:	
03445CIP/HG	:	

This is a decision on the 1) Petition under 37 C.F.R. 1.183, requesting that the Office suspend the rules and consider on the merits a Request for Reconsideration of Patent Term Adjustment under 37 C.F.R. 1.705(d) filed more than two months from the date the above-referenced patent issued; and on the 2) APPLICATION FOR PATENT TERM ADJUSTMENT UNDER 37 C.F.R. §1.705(d), both of which were filed on February 11, 2009.

The petition under 37 CFR 1.183 is **dismissed**.

The request for reconsideration of patent term adjustment under 37 CFR 1.705(d) is **dismissed as untimely filed**.

Any request for reconsideration, whether directed to the decision on petition under 37 CFR 1.183 or to the decision on application for patent term adjustment under 37 CFR 1.705(d), must be filed within two months of the mailing date of this decision. Extensions of time under 37 CFR 1.136 are not permitted. See § 1.181(f).

BACKGROUND

On June 12, 2007, the above-identified application matured into U.S. Patent No. 7,230,023, with a revised patent term adjustment of 585 days. No request for reconsideration of the patent term adjustment indicated in the patent was filed within two months of the date the patent issued. Patentee now petitions under 37 C.F.R. § 1.183 to (i) suspend or waive the requirement of 37 C.F.R. § 1.705(d) that a Request for Reconsideration of Patent Term Adjustment be filed within two months of the date the patent issued; and (ii) consider the enclosed Request for Reconsideration of Patent Term Adjustment. Patentee makes this request based on the recent decision in Wyeth v. Dudas, No. 07-1492 (D.D.C. Sept. 30, 2008).

ON PETITION UNDER 37 CFR 1.183
TO WAIVE THE TWO-MONTH REQUIREMENT OF 37 CFR 1.705(d)

The above-referenced patent issued on June 12, 2007. A request for reconsideration of the patent term adjustment indicated in the patent was not filed until February 11, 2009. Petitioner requests that the Office suspend the rules and consider on the merits the Request for Reconsideration of Patent Term Adjustment under 37 C.F.R. 1.705(d) even though it was untimely filed more than two months from the date the patent issued.

The relevant regulation, 37 CFR 1.705(d), provides that:

> If there is a revision to the patent term adjustment indicated in the notice of allowance, the patent will indicate the revised patent term adjustment. If the patent indicates or should have indicated a revised patent term adjustment, *any request for reconsideration of the patent term adjustment indicated in the patent must be filed within two months of the date the patent issued* and must comply with the requirements of paragraphs (b)(1) and (b)(2) of this section. Any request for reconsideration under this section that raises issues that were raised, or could have been raised, in an application for patent term adjustment under paragraph (b) of this section shall be dismissed as untimely as to those issues. (*emphasis* added).

By the express provisions of 37 CFR 1.705(d), a request for reconsideration of patent term adjustment must be filed within two months of the date the patent issued. It is undisputed that

no such request for reconsideration was filed by August 12, 2007, the date two months from the date this patent issued, June 12, 2007. Rather, on February 11, 2009, more than four months after the issuance of a decision in Wyeth v. Dudas on September 30, 2008, petitioner filed the instant request for waiver of the two-month requirement.

37 CFR 1.183 provides that:

> In an extraordinary situation, when justice requires, any requirement of the regulations in this part which is not a requirement of the statutes may be suspended or waived by the Director or the Director's designee, sua sponte, or on petition of the interested party, subject to such other requirements as may be imposed. Any petition under this section must be accompanied by the petition fee set forth in § 1.17(f).

Preliminarily, it is recognized that the two-month requirement of 37 CFR 1.705(d) is a requirement of the regulations and not a statutory requirement. The statute, 35 U.S.C. 154, requires the Office to provide the applicant one opportunity to request reconsideration of any patent term adjustment determination made by the Director. But, the statute allows the Director to establish the procedures for requesting such reconsideration. Those procedures[1] include pursuant to 37 CFR 1.705(d) setting a two-month period for filing a request for reconsideration of the

---

[1] 35 U.S.C. § 154(b)(3) provides that the USPTO shall: (1) prescribe regulations establishing procedures for the application for and determination of patent term adjustments under 35 U.S.C. § 154(b); (2) make a determination of any patent term adjustment under 35 U.S.C. § 154(b) and transmit a notice of that determination with the notice of allowance under 35 U.S.C. § 151; and (3) provide the applicant one opportunity to request reconsideration of any patent term adjustment determination. Pursuant to the mandate and authority in 35 U.S.C. § 154(b)(3), the USPTO promulgated 37 C.F.R. § 1.705, which provides that: (1) the notice of allowance will include notification of any patent term adjustment under 35 U.S.C. § 154(b)(37 C.F.R. § 1.705(a)); (2) any request for reconsideration of the patent term adjustment indicated in the notice of allowance (except as provided in 37 C.F.R. § 1.705(d)) must be by way of an application for patent term adjustment filed no later than the payment of the issue fee and accompanied by (inter alia) the fee set forth in 37 C.F.R. § 1.18(e)(37 C.F.R. § 1.705(b)); and (3) if the patent indicates or should have indicated a revised patent term adjustment, any request for reconsideration of the patent term adjustment indicated in the patent must be filed within two months of the date the patent issued.

revised patent term adjustment indicated in the patent. As such, it is within the Director's authority to waive the two-month requirement.

Having considered petitioner's arguments, it is concluded that waiver of the two-month requirement is not warranted. Specifically, petitioner cites to Wyeth, where the U.S. District Court for the District of Columbia held that contrary to USPTO practice, a patentee is entitled to Patent Term Adjustment credit for examination delay under 37 CFR 1.702(b) in addition to any examination delay under 37 CFR 1.702(a), to the extent that the two periods of delay "do not occur on the same calendar day or days." Petitioner requests waiver of Rule 1.705(d) to permit filing and consideration of the application for patent term adjustment, the basis for which is "[i]n view of the timing of the issuance of applicant's patent and the rendering of the Wyeth v. Dudas decision, applicant's can no longer seek a court review of this matter." Petitioner's argue that "applicant's sole possibility to obtain relief is for the USPTO to waive the two-month term after a patent issues for filing an application for patent term adjustment as set forth in 37 CFR 1.705(d)."

First, of all, the issuance of the Wyeth Opinion is not an extraordinary situation. Wyeth followed the procedure set forth in 37 CFR 1.705 for requesting reconsideration of the patent term adjustment determination. Then, pursuant to 35 U.S.C. 154(b)(4)(A)[2], Wyeth timely filed a complaint in District Court seeking judicial review of the Office's decision. A Memorandum Opinion and Order, the Wyeth decision of September 30, 2008, directed to the parties involved was issued.

The fact that any relief ultimately granted in Wyeth would benefit patentee had they timely filed a request for reconsideration does not make the situation extraordinary. Petitioner chose not to challenge their revised patent term adjustment within the two-month period. Petitioner could have

---

[2] 35 U.S.C. 154(b)(4) (A) APPEAL OF PATENT TERM ADJUSTMENT DETERMINATION. – (A) An applicant dissatisfied with a determination made by the Director under paragraph (3) shall have remedy by a civil action against the Director filed in the United States District Court for the District of Columbia within 180 days after the grant of the patent. Chapter 7 of title 5 shall apply to such action. Any final judgment resulting in a change to the period of adjustment of the patent term shall be served on the Director, and the Director shall thereafter alter the term of the patent to reflect such change.

filed a Request for Reconsideration of Patent Term Adjustment as Wyeth did. It is acknowledged that petitioner may have chose not to file a request for reconsideration based on a conclusion that the Office's interpretation of 35 U.S.C. § 154(b)(2)(A) was correct. Nonetheless, the fact that the District Court has now issued an Opinion contrary to the Office's interpretation does not make the situation extraordinary. This is not unlike any other situation where a patentee (or applicant) challenges a final agency decision and the decision upon judicial review could have had applicability to another patentee (or applicant) had they taken such action. In fact, many patentees may be in the same situation as petitioner with respect to the Wyeth decision.

Further, Petitioner if not on notice by established principles of administrative law was on notice by the Office's issuance of the above-cited Opinion that failure to file a request for reconsideration of patent term adjustment within the two-month period as required would likely foreclose their right to judicial relief. Yet they chose to not to file a request for reconsideration within the two-month period. This consequence of their failure does not render the failure an extraordinary situation warranting waiver of the two-month requirement. The key consideration in determining whether waiver is warranted is whether the circumstance that led to petitioner failing to meet the two-month requirement was an extraordinary situation where justice requires waiver.

Petitioner simply fails to articulate how their failure to file a request for reconsideration of patent term adjustment within two months of the issue date of the patent was due to an extraordinary situation. Petitioner cannot rely on Wyeth's actions or the Wyeth decision to establish that their situation was extraordinary.

Moreover, justice does not require waiver of the two-month requirement. Justice requires that the Office continue to devote its resources to the adjudication of timely filed requests for reconsideration under 37 CFR 1.705(b) and (d). Further, upon ultimate resolution of the interpretation of 37 CFR 1.702, justice requires that the Office determine consistent with relevant law and practice, and appropriate Court or legislative guidance, the applicability of any changes as to all affected patentees who failed to timely seek administrative remedy, and thus, could not seek judicial review. The fact that

time remains for seeking judicial review does not change this conclusion.

In view thereof, the petition under 37 CFR 1.183 for waiver of the two-month requirement of 37 CFR 1.705(d) is **dismissed**.

Accordingly, consideration now turns to the Request for Reconsideration of Patent Term Adjustment under 37 CFR 1.705(d).

ON REQUEST FOR RECONSIDERATION OF PATENT TERM ADJUSTMENT UNDER 37 CFR 1.705(d)

This is a decision on the "REQUEST FOR RECONSIDERATION OF PATENT TERM ADJUSTMENT UNDER 37 CFR 1.705(d)," filed February 11, 2009. Therein, patentee requests correction of the patent term adjustment (PTA) indicated in the patent to eight hundred eighty-one (881) days.

On June 12, 2007, the above-identified application matured into U.S. Patent No. 7,230,023, with a revised patent term adjustment of 585 days. The instant request for reconsideration was filed nearly 20 months after the issuance of the patent, on February 11, 2009.

No error in the printing of the patent has been shown. The patent term adjustment indicated on the patent reflects the Office's determination of patent term adjustment shown in the PAIR system for this application. 37 CFR 1.705(d) provides the sole avenue before the Office for requesting reconsideration of the Office's determination of patent term adjustment indicated in the patent. Moreover, § 1.705(d) states that "any request for reconsideration of the patent term adjustment indicated in the patent must be filed within two months of the date the patent issued and must comply with the requirements of paragraphs (b)(1) and (b)(2) of this section." Since the request was not filed within two months of the issue date of the patent, the request is properly **dismissed as untimely filed**.

CONCLUSION

It is determined that waiver of the requirement pursuant to 37 CFR 1.183 is not warranted. Accordingly, the request for reconsideration of the patent term adjustment under 37 CFR

1.705(d) filed more than two months after the issue date of the patent is dismissed as untimely filed.

Telephone inquiries specific to this matter should be directed to Derek Woods, Attorney, Office of Petitions, at (571) 272-3232.

Kery A. Fries
Senior Legal Advisor
Office of Patent Legal Administration

UNITED STATES PATENT AND TRADEMARK OFFICE

Commissioner for Patents
United States Patent and Trademark Office
P.O. Box 1450
Alexandria, VA 22313-1450
www.uspto.gov

RAY K. SHAHANI
TWIN OAKS OFFICE PLAZA
477 NINTH AVENUE, SUITE 112
SAN MATEO CA 94402-1854

In re Application of	:
Stephen Sundstrom	:
Serial No.: 10/647,056	: PETITION DECISION
Filed: August 22, 2003	:
Attorney Docket No.: SJS-101	:

This is a decision on the PETITION FOR ACCEPTANCE OF COLOR DRAWINGS UNDER 37 CFR 1.84(a)(2). The petition was filed August 22, 2003. Entry of color drawings requires: 1) three sets of the color drawings, 2) a proper amendment to the specification indicating color photographs or drawings are present in the file, and 3) the required fee under 37 CFR 1.17(h).

A review of the application record indicates that the petition meets all of the requirements for acceptance of color drawings. This is not to be construed that all of the drawings are accepted, only that the color drawings are acceptable.

The petition is **GRANTED**.

Should there be any questions with respect to this decision, please contact Robert Pezzuto, by mail addressed to: Director, Technology Center 3700, at the address listed above, or by telephone at 571-272-6996 or by facsimile transmission at 571-273-8300.

Robert Pezzuto
Supervisor Patent Examiner
Art Unit 3714

UNITED STATES PATENT AND TRADEMARK OFFICE

Commissioner for Patents
United States Patent and Trademark Office
P.O. Box 1450
Alexandria, VA 22313-1450
www.uspto.gov

ERICKSON & KLEYPAS, L.L.C.
800 W. 47TH STREET, SUITE 401
KANSAS CITY MO 64112

COPY MAILED

NOV 2 1 2007

OFFICE OF PETITIONS

In re Application of :
T.G. Nagaraja et al :
Application No. 10/647,057 : DECISION ON PETITION
Filed: August 22, 2003 :
Attorney Docket No. 30296A-DIV1 :

This is a decision on the petition under 37 CFR 1.137(b), filed May 8, 2007, to revive the above-identified application.

The petition is **GRANTED.**

The application became abandoned for failure to timely reply within the meaning of 37 CFR 1.113 to the final Office action, mailed October 4, 2006, which set a shortened statutory period for reply of three (3) months. No extensions of time were obtained under the provisions of 37 CFR 1.136(a) for replying to the final Office action of October 4, 2006. Accordingly, the application became abandoned on January 5, 2007.

The petition satisfies the requirements of 37 CFR 1.137(b) in that petitioner has supplied (1) the required reply in the form of a request for continued examination, $790 filing fee, and submission as required by 37 CFR 1.114, (2) the petition fee of $1,500, and (3) a proper statement of unintentional delay. Accordingly, the failure to timely reply to the final Office action of October 4, 2006 is accepted as being unintentionally delayed.

This application is being referred to Technology Center AU 1645 for processing the request for continued examination and for appropriate action in the normal course of business on the submission under 37 CFR 1.114 received May 8, 2007.

Telephone inquiries concerning this decision should be directed to the undersigned at (571) 272-3218.

Frances Hicks
Petitions Examiner
Office of Petitions

SPE RESPONSE FOR CERTIFICATE OF CORRECTION

Paper No.: _____

DATE : 5-16-2005

TO SPE OF : ART UNIT 2812

SUBJECT : Request for Certificate of Correction on Patent No.: 6,830,964 B1 10/647,061

A response is requested with respect to the accompanying request for a certificate of correction.

Please complete this form and return with file, within **7** days to:
Certificates of Correction Branch - PK 3-915
Palm location **7580** - Tel. No. 305-8309

With respect to the change(s) requested, correcting Office and/or Applicant's errors, should the patent read as shown in the certificate of correction? No new matter should be introduced, nor should the scope or meaning of the claims be changed.

Magdalene Talley

Thank You For Your Assistance

Certificates of Correction Branch

The request for issuing the above-identified correction(s) is hereby:
Note your decision on the appropriate box.

☒ **Approved**	**All** changes apply.
☐ **Approved in Part**	Specify below which changes **do not** apply.
☐ **Denied**	State the reasons for denial below.

Comments:

SPE 2812

UNITED STATES PATENT AND TRADEMARK OFFICE

Commissioner for Patents
United States Patent and Trademark Office
P.O. Box 1450
Alexandria, VA 22313-1450
www.uspto.gov

Motorola, Inc.
Law Department
1303 East Algonquin Road
3rd Floor
Schaumburg IL 60196

COPY MAILED

JUL 21 2009

OFFICE OF PETITIONS

In re Application of :
Moroney et al. :
Application No. 10/647064 :
Filing or 371(c) Date: 08/22/2003 : ON PETITION
Attorney Docket Number: :
D03037 :

This is a decision on the Request for Reconsideration of Petition Under 37 CFR 1.137(b), filed June 3, 2009, to revive the above-identified application.

The petition is **granted**.

The above-identified application became abandoned for failure to timely and properly reply to the final Office action, mailed August 15, 2007. The Office action set a three (3) month period for reply from the mail date of the Office action. Extensions of time were available under 37 CFR 1.136(a). Applicant filed a Request for Continued Examination ("RCE") and an Amendment on February 15, 2008; however, the Amendment was non-compliant. Applicant was so notified in a Notice of Non-Compliant Amendment mailed March 5, 2008. No complete and proper reply having been received, the application became abandoned on November 16, 2007. A Notice of Abandonment was mailed October 1, 2008.

Applicant files the present petition and Amendment in response to the Office action. The Amendment has been approved by the Examiner. The petition satisfies the conditions for revival pursuant to the provisions of 37 CFR 1.137(b) in that (1) the reply in the form of an Amendment is filed with the present petition; (2) the petition fee (previously submitted); and (3) the required statement of unintentional delay (previously submitted). Accordingly, the reply is accepted as having been unintentionally delayed.

This application is being referred to Technology Center Art Unit 2134 for processing of the Amendment filed with the petition in the normal course of business.

Telephone inquiries concerning this decision should be directed to the undersigned at (571) 272-3232.

/Derek L. Woods/
Derek L. Woods
Attorney
Office of Petitions

SPE RESPONSE FOR CERTIFICATE OF CORRECTION

DATE : 1/23/08

Paper No.: —

TO SPE OF : ART UNIT 2838

SUBJECT : Request for Certificate of Correction for Appl. No.: 10/647067 Patent No: RE39108E

A response is requested with respect to a request for a certificate of correction.

With respect to the change(s) requested to correct Office and/or Applicant's errors, should the patent read as shown in the certificate of correction attached herewith or the COCIN document(s), in IFW images for the above-identified patented application? No new matter should be introduced, nor should the scope or meaning of the claims be changed.

If the response is for an IFW, within 7 days, please complete and forward the response, to the employee (named below) via scanning into application images, using document code **COCX**.

If the response is for a paper file wrapper, please complete the response and forward the response with the paper file wrapper, to the employee (named below), within 7 days, to:

Certificates of Correction Branch (CofC)
South Tower - 9A22
Palm Location 7580

VIRGINIA TOLBERT
Certificates of Correction Branch
703-308-9390 ext. 113

Thank You For Your Assistance

The request for issuing the above-identified correction(s) is hereby:
Note your decision on the appropriate box.

- ☑ **Approved** — All changes apply.
- ☐ **Approved in Part** — Specify below which changes **do not** apply.
- ☐ **Denied** — State the reasons for denial below.

Comments: OK ✓

AKM ULLAH
SUPERVISORY PATENT EXAMINER

SPE

2838
Art Unit

UNITED STATES PATENT AND TRADEMARK OFFICE

Commissioner for Patents
United States Patent and Trademark Office
P.O. Box 1450
Alexandria, VA 22313-1450
www.uspto.gov

DANN DORFMAN HERRELL & SKILLMAN
SAET
1601 MARKET STREET
PHILADELPHIA, PA 19103-2307

COPY MAILED

AUG 09 2004

OFFICE OF PETITIONS

In re Application of	:	
Louis C. Argenta et al	:	
Application No. 10/647,068	:	NOTICE
Filed: August 22, 2003	:	
Attorney Docket No. 0101 P02977US1	:	

This is a notice regarding your request for acceptance of a fee deficiency submission under 37 CFR 1.28. On September 1, 1998, the Court of Appeals for the Federal Circuit held that 37 CFR 1.28(c) is the sole provision governing the time for correction of the erroneous payment of the issue fee as a small entity. **See DH Technology v. Synergystex International, Inc. 154 F.3d 1333, 47 USPQ2d 1865 (Fed. Cir. Sept. 1, 1998).**

The Office no longer investigates or rejects original or reissue applications under 37 CFR 1.56. **1098 Off. Gaz. Pat. Office 502 (January 3, 1989).** Therefore, nothing in this Notice is intended to imply that an investigation was done.

Your fee deficiency submission under 37 CFR 1.28 is hereby **ACCEPTED.**

Inquiries related to this communication should be directed to the Office of Petitions Staff at (703) 305-9285.

This matter is being referred to Technology Center AU 3732.

Wan Laymon
Petitions Examiner
Office of Petitions
Office of the Deputy Commissioner
for Patent Examination Policy

UNITED STATES PATENT AND TRADEMARK OFFICE

Commissioner for Patents
United States Patent and Trademark Office
P.O. Box 1450
Alexandria, VA 22313-1450
www.uspto.gov

CHARLES RATTNER, ESQ.
APT 7
240 WARDWELL ST
STAMFORD, CT 06902-5254

COPY MAILED

OCT 20 2004

OFFICE OF PETITIONS

In re Application of	:	
Prasanna Adhikari	:	
Application No. 10/647,070	:	NOTICE
Filed: August 22, 2003	:	
Attorney Docket No. 1137U005	:	

This is a notice regarding your request for acceptance of a fee deficiency submission under 37 CFR 1.28. On September 1, 1998, the Court of Appeals for the Federal Circuit held that 37 CFR 1.28(c) is the sole provision governing the time for correction of the erroneous payment of the issue fee as a small entity. **See DH Technology v. Synergystex International, Inc. 154 F.3d 1333, 47 USPQ2d 1865 (Fed. Cir. Sept. 1, 1998).**

The Office no longer investigates or rejects original or reissue applications under 37 CFR 1.56. **1098 Off. Gaz. Pat. Office 502 (January 3, 1989).** Therefore, nothing in this Notice is intended to imply that an investigation was done.

Your fee deficiency submission under 37 CFR 1.28 is hereby **ACCEPTED.**

Inquiries related to this communication should be directed to Wan Laymon at (571) 272-3220.

This matter is being referred to Technology Center AU 2155.

Wan Laymon
Petitions Examiner
Office of Petitions
Office of the Deputy Commissioner
for Patent Examination Policy

UNITED STATES PATENT AND TRADEMARK OFFICE

Commissioner for Patents
United States Patent and Trademark Office
P.O. Box 1450
Alexandria, VA 22313-1450
www.uspto.gov

JONES DAY
222 EAST 41ST ST.
NEW YORK, NY 10017

COPY MAILED

AUG 0 5 2005

OFFICE OF PETITIONS

In re Application of :
Richard Kroczek :
Application No. 10/647,072 : ON PETITION
Filed: August 22, 2003 :
Attorney Docket No. 7853-267 :

This is a decision on papers styled, "Response to Notice to File Missing Parts and Petition Under 37 CFR 1.182 and 1.17(h)," filed on March 1, 2004, which is being treated as a petition under 37 CFR 1.53, requesting that the above-identified application be accorded a filing date of August 22, 2003, including Figure 10 described in the specification. The petition was recently forwarded to this office for review.

The application was submitted on August 22, 2003 as a continuation of prior application No. 09/509,283, filed August 11, 2000. However, on December 30, 2003, the Office of Initial Patent Examination (OIPE) mailed a "Notice to File Missing Parts of Nonprovisional Application" (Notice) that stated the application had been accorded a filing date, and among other items, that Figure 10 described in the specification appears to have been omitted.

In response, on March 1, 2004, the instant petition was submitted. Petitioner states:

> "The instant application, which is a continuation application of application no. 09/509,283 (" '283 application"), was filed on August 22, 2003. The Notice contends that Figure 10 of the application was omitted from the instant application when it was filed.
>
> Applicant respectfully points out that the instant application incorporates the '283 application by reference in its entirety. Because the '283 application contained Figure 10, the entry of Figure 10 into the specification would not constitute the addition of new matter to the application under 35 U.S.C. § 132. With this in mind, Applicant submits herewith a copy of Figure 10."

The application transmittal letter identified this application as a continuation application of prior application No. 09/509,283, filed August 11, 2000, and specifically incorporated by reference the disclosure of the prior application. Petitioner requests that the missing Figure be incorporated by reference from the prior application. A petition, however, is not required for such action.

MPEP 201.06(c) states:

> B. Application Entitled to a Filing Date
> If a continuation or divisional application as originally filed is entitled to a filing date despite the omission of a portion of the prior application(s), applicant will be permitted to add the omitted material by way of an amendment provided a statement was included in the application as originally filed that incorporates by reference the prior application(s). If the application as originally filed includes a proper incorporation by reference of the prior application(s), an omitted specification page(s) and/or drawing figure(s) identified in a "Notice of Omitted Item(s)" may be added by amendment provided the omitted item(s) contains only subject matter in common with such prior application(s). In such case, applicant need not respond to the "Notice of Omitted Item(s)." Applicant should submit the amendment adding the omitted material prior to the first Office action to avoid delays in the prosecution of the application. See MPEP 601.01(d) and 601.01(g).

If applicants desire that Figure 10 described in the specification be added to the application, the appropriate procedure is by way of amendment requesting the entry of the Figure. Any such amendment should be filed prior to the first action on the merits and will be considered by the primary examiner.

Accordingly, the petition is dismissed.

Please note, the petition fee will not be refunded, since the petition was not necessitated by any error on the part of the USPTO.

The application will be forwarded to the Office of Initial Patent Examination for further processing.

Telephone inquiries should be directed to the undersigned at (571) 272-3228.

Edward J. Tannouse
Petitions Attorney
Office of Petitions/Patent
United States Patent and Trademark Office

UNITED STATES PATENT AND TRADEMARK OFFICE

Commissioner for Patents
United States Patent and Trademark Office
P.O. Box 1450
Alexandria, VA 22313-1450
www.uspto.gov

TESTA HURWITZ & THIBEAULT
HIGH STREET TOWER
125 HIGH STREET
BOSTON, MA 02110

COPY MAILED

DEC 2 8 2004

OFFICE OF PETITIONS

In re Application of :
Christopher Vineis et al :
Application No. 10/647,074 : ON PETITION
Filed: August 22, 2003 :
Attorney Docket No. ASC-58A :

This is a decision on the petition under 37 CFR 1.182, filed October 21, 2004, to change the order of the names of the inventors.

The petition is **granted**.

The order of the names of the inventors will be changed as follows:

1. Christopher Vineis
2. Vicky Yang
3. Matthew Currie
4. Richard Westhoff
5. Christopher Leitz

A corrected filing receipt is enclosed.

This matter is being referred to Technology Center AU 2823.

Any questions concerning this matter may be directed to Wan Laymon at (571) 272-3220.

Wan Laymon
Petitions Examiner
Office of Petitions
Office of the Deputy Commissioner
for Patent Examination Policy

Attachment: Corrected Filing Receipt

UNITED STATES PATENT AND TRADEMARK OFFICE

COMMISSIONER FOR PATENTS
UNITED STATES PATENT AND TRADEMARK OFFICE
P.O. BOX 1450
ALEXANDRIA, VA 22313-1450
www.uspto.gov

IP GROUP OF DLA PIPER RUDNICK GRAY
CARY US LLP
1650 Market Street
Suite 4900
Philadelphia, PA 19103

MAILED

JUN 2 5 2005

Technology Center 2100

In re Application of: Arnouse
Application No. 10/647,080
Filed: August 22, 2003
For: SYSTEM AND METHOD FOR NETWORK SECURITY

DECISION ON PETITION TO MAKE SPECIAL UNDER 37 C.F.R. §1.102(d) AND M.P.E.P.§708.02(XI)

This is a decision on the petition to make special filed August 22, 2003 under 37 C.F.R. §1.102(d) and M.P.E.P. §708.02(XI): Inventions For Countering Terrorism.

The petition is **DISMISSED**.

M.P.E.P. §708.02(XI), which sets forth the prerequisites for a grantable petition for Inventions For Countering Terrorism under 37 C.F.R. § 1.102(d), states in relevant part:

> International terrorism as defined in 18 U.S.C. 2331 includes "activities that - (A) involve violent acts or acts dangerous to human life that are a violation of the criminal laws of the United States or of any State, or that would be a criminal violation if committed within the jurisdiction of the United States or of any State; [and] (B) appear to be intended - (i) to intimidate or coerce a civilian population; (ii) to influence the policy of a government by intimidation or coercion; or (iii) to affect the conduct of a government by assassination or kidnapping..." The types of technology for countering terrorism could include, but are not limited to, systems for detecting/identifying explosives, aircraft sensors/security systems, and vehicular barricades/disabling systems.
>
> Applicants who desire that an application relating to inventions for countering terrorism be made special should file a petition with the petition fee under 37 CFR 1.17(h) requesting the U.S. Patent and Trademark Office to make the application special. The petition for special status should be accompanied by a statement explaining how the invention contributes to countering terrorism.

Petitioner's submission fails to meet the criteria set out with respect to countering terrorism in M.P.E.P. §708.02(XI). The claimed invention and specification are generally directed to a method and system of biometric based identification cards with distributed information stores along with GPS location of the presentation location of the identification cards. Implementation on a computer system an interactive biometric identification and tracking system does not

directly prevent "violent acts or acts dangerous to human life that are a violation of the criminal laws of the United States or of any State" or activities that would "be a criminal violation if committed within the jurisdiction of the United States or of any State". Furthermore, implementing on a computer system an interactive biometric identification and tracking system does not directly prevent acts that appear to be intended "to intimidate or coerce a civilian population", "influence the policy of a government by intimidation or coercion", or "affect the conduct of a government by assassination or kidnapping".

Although it can be said that a computer implemented interactive biometric identification and tracking system may limit acts of terrorism, the method and system disclosed do not teach directly preventing potential terrorist acts by identifying terrorists, identifying an individual as a terrorists or one who will perform a terrorist act.

Petitioner fails to establish a sufficient nexus between the disclosed and claimed invention and preventing violent acts or acts dangerous to human life that are a violation of the criminal laws of the United States or of any State or activities that would be a criminal violation if committed within the jurisdiction of the United States or of any State, or preventing acts that appear to be intended to intimidate or coerce a civilian population, influence the policy of a government by intimidation or coercion, or affect the conduct of a government by assassination or kidnapping.

As a result, no advancement in the technology of countering terrorism has been persuasively shown.

Accordingly, the petition is **DISMISSED**. The application will be returned to the examiner's docket to await treatment on the merits in the normal order of examination.

Any request for reconsideration must be filed within TWO MONTHS of the mailing date of this decision.

It is suggested that Applicant review M.P.E.P. §708.02 regarding other grounds available for filing a petition to make special. In particular, note M.P.E.P. §708.02(VIII): Accelerated Examination, which does not place limitations on the subject matter of the application.

Brian L. Johnson 6/6/05
Special Programs Examiner
Technology Center 2100
Computer Architecture, Software, and Information Security
(571) 272-3595

UNITED STATES PATENT AND TRADEMARK OFFICE

Commissioner for Patents
United States Patent and Trademark Office
P.O. Box 1450
Alexandria, VA 22313-1450
www.uspto.gov

THOMAS B. HAVERSTOCK
HAVERSTOCK & OWENS, LLP
162 NORTH WOLFE ROAD
SUNNYVALE, CALIFORNIA 94086

MAIL

MAR - 3 2005

DIRECTOR OFFICE
TECHNOLOGY CENTER 2100

In re Application of: Estakhri et al.
Application No. 10/647,084
Attorney Docket No. LEXA-00206
Filed: August 21, 2003
For: FLASH MEMORY CARD WITH ENHANCED OPERATING MODE DETECTION AND USER-FRIENDLY INTERFACING SYSTEM

DECISION ON PETITION TO MAKE SPECIAL UNDER 37 C.F.R. §1.102 and M.P.E.P. §708.02(II)

This decision is in response to the petition filed April 16, 2004 under 37 CFR §1.102(d), requesting to make special of the above-identified application in view of M.P.E.P. §708.02(II): Infringement.

The petition is **DISMISSED**.

M.P.E.P. §708.02, Section II, which sets out the prerequisites for a grantable petition for Accelerated Examination under 37 C.F.R. §1.102(d), states in relevant part:

> A new application (one which has not received any examination by the examiner) may be granted special status provided that applicant (and this term includes applicant's attorney or agent) complies with each of the following items:
>
> > Subject to a requirement for a further showing as may be necessitated by the facts of a particular case, an application may be made special because of actual infringement (but not for prospective infringement) upon payment of the fee under 37 CFR 1.17(h) and the filing of a petition accompanied by a statement by the applicant, assignee, or an attorney/agent registered to practice before the Office alleging:
> >
> > **(A) That there is an infringing device or product actually on the market or method in use;**
> > **(B) That a rigid comparison of the alleged infringing device, product, or method with the claims of the application has been made, and that, in his or her opinion, some of the claims are unquestionably infringed; and**
> > (C) That he or she has made or caused to be made a careful and thorough search of the prior art or has a good knowledge of the pertinent prior art.
> >
> > Applicant must provide one copy of each of the references deemed most closely related to the subject matter encompassed by the claims if said references are not already of record. Models or

specimens of the infringing product or that of the application should not be submitted unless requested.

Petitioner's submission, filed April 16, 2004, contains 1) a statement signed by one of the inventors, and 2) a statement signed by the attorney of record. Both statements, and therefore the petition, fail to meet the criteria set out with respect to alleged infringement in M.P.E.P. §708.02, Section II.

With respect to the first statement, signed by one of the inventors, it is noted that there are two inventors. Note that M.P.E.P. §708.02, Section II states, in relevant part, that "... *and the filing of a petition accompanied by a statement by the* ***applicant****, assignee, or an attorney/agent...*". **The execution of the petition is improper because the statement has not been not signed by <u>both</u> inventors.**

The second statement, signed by the attorney of record, also fails to meet the criteria set out with respect to alleged infringement in M.P.E.P. §708.02, Section II. In particular, the Petitioner has not stated *that there is an infringing device or product actually on the market or method in use.* Petitioner has only stated that "*Products, marketed and sold by* ***numerous companies*** *infringe claims...*". Thus, the statement is deficient in that it does not refer to an ***actual product***, but rather to some ***class of products***. It therefore follows that the statement is also deficient because "*...a rigid comparison of the alleged infringing device, product, or method with the claims of the application...*" would have been impossible. Therefore, Petitioner's submission, filed April 16, fails to meet the criteria set out with respect to alleged infringement in M.P.E.P. §708.02, Section II.

Accordingly, the Petition is **<u>DISMISSED</u>**.

Petitioner is given one opportunity to perfect the petition. Any request for reconsideration must be filed within TWO MONTHS of the mail date of this decision.

Until the renewed petition is submitted, the application will be returned to the examiner's docket to await treatment on the merits in the normal order of examination.

Vincent Trans
Special Programs Examiner
Technology Center 2100
Computer Architecture, Software, and Information Security
(571) 272-3613

HMJ: 12/02/2004

UNITED STATES PATENT AND TRADEMARK OFFICE

Commissioner for Patents
United States Patent and Trademark Office
P.O. Box 1450
Alexandria, VA 22313-1450
www.uspto.gov

FOLEY AND LARDNER LLP
SUITE 500
3000 K STREET NW
WASHINGTON DC 20007

MAILED

JUN 05 2009

OFFICE OF PETITIONS

In re Patent No. 7,446,243
Issued: November 4, 2008
Application No. 10/647,114
Filed: August 25, 2003
Dkt. No.: 056859-0188

: PATENT TERM ADJUSTMENT

This is a decision on the "REQUEST FOR RECONSIDERATION OF PATENT TERM ADJUSTMENT UNDER 37 C.F.R §1.705", filed November 6, 2008. This matter is being properly treated as an application for patent term adjustment pursuant to 37 CFR 1.705(d).

The request for reconsideration of patent term adjustment (PTA) is **DISMISSED**.

The above-identified application matured into U.S. Pat. No. 7,446,243 on November 4, 2008. The patent issued with a PTA 745 days. The request for reconsideration of patent term adjustment was timely filed within two months of the issue date of the patent. See, 37 CFR 1.705(d). Patentees request that the patent term adjustment be increased from 745 days to 1,319 days.

Patentees request reconsideration of the patent term adjustment based on the decision in Wyeth v. Dudas, 580 F. Supp. 2d 138, 88 U.S.P.Q. 2d 1538 (D.D.C. 2008). Patentees contend that pursuant to Wyeth, a PTO delay under 35 U.S.C. 154(b)(1)(A) overlaps with a delay under 35 U.S.C. 154(b)(1)(B) only if the delays occur on the same day.

Patentees maintain that the period of adjustment due to the three year delay by the Office, pursuant to 37 CFR 1.702(b), of 802 days and the period of adjustment due to examination delay, pursuant to 37 CFR 1.702(a)(1), of 897 days overlap by 228 days, but that the remaining period of 574 days does overlap as the remaining period does not occur on the same days. The 802-day period is calculated based on the application having been filed under 35 U.S.C. 111(a) on August 25, 2003 and the application having issued as a patent on November 4, 2008. Patentees assert that in addition to this 574-day period, they are entitled to a period of adjustment due to examination delay pursuant to 37 CFR 1.702(a) of 897 days.

Under 37 CFR 1.703(f), patentees are entitled to a period of patent term adjustment equal to the period of delays based on the grounds set forth in 37 CFR 1.702 reduced by the period of time equal to the period of time during which patentees failed to engage in reasonable efforts to

conclude prosecution pursuant to 37 CFR 1.704. In other words, patentees are entitled to the period of Office delay reduced by the period of applicant delay.

Patentees do not dispute that the total period of Office delay is the sum of the period of three years delay and the period of examination delay, to the extent that these periods of delay are not overlapping. However, in effect, patentees contend that only a portion of the three year delay period overlaps with the period of examination delay. Accordingly, patentees submit that the total period of adjustment for Office delay is 1,699 days (the sum of the period of three year delay (802 days) and the period of examination delay (897 days), reduced by 228 days of overlap. As such, patentees assert entitlement to a patent term adjustment of 1,319 days (802 days *plus* 897 days *less* 228 days of overlap *less* 152 days of applicant delay).

The Office agrees that as of the issuance of the patent on November 4, 2008, the application was pending three years and 802 days after its filing date. The Office agrees that certain action was not taken within a specified time frame, and, thus, the entry of a period of adjustment of 897 days is correct. At issue is whether patentees should accrue an additional 574 days of patent term adjustment for the Office taking in excess of three years to issue the patent as well as 897 days for Office failure to take a certain action within a specified time frame (or examination delay).

The Office contends that 802 days overlap. Patentees' calculation of the period of overlap is inconsistent with the Office's interpretation of this provision. 35 U.S.C. 154(b)(2)(A) limits the adjustment of patent term, as follows:

> To the extent that the periods of delay attributable to grounds specified in paragraph (1) overlap, the period of any adjustment granted under this subsection shall not exceed the actual number of days the issuance of the patent was delayed.

Likewise, 35 CFR 1.703(f) provides that:

> To the extent that periods of delay attributable to the grounds specified in § 1.702 overlap, the period of adjustment granted under this section shall not exceed the actual number of days the issuance of the patent was delayed.

As explained in Explanation of 37 CFR 1.703(f) and of the United States Patent and Trademark Office Interpretation of 35 U.S.C. 154(b)(2)(A), 69 Fed. Reg. 34283 (June 21, 2004), the Office interprets 35 U.S.C. 154(b)(2)(A) as permitting either patent term adjustment under 35 U.S.C. 154(b)(1)(A)(i)-(iv), or patent term adjustment under 35 U.S.C. 154(b)(1)(B), but not as permitting patent term adjustment under both 35 U.S.C. 154(b)(1)(A)(i)-(iv) and 154(b)(1)(B). Accordingly, the Office implements the overlap provision as follows:

> If an application is entitled to an adjustment under 35 U.S.C. 154(b)(1)(B), the entire period during which the application was pending (except for periods excluded under 35 U.S.C. 154(b)(1)(B)(i)-(iii)), and not just the period beginning three years after the actual filing date of the application, is the period of delay under 35 U.S.C. 154(b)(1)(B) in

> determining whether periods of delay overlap under 35 U.S.C. 154(b)(2)(A). Thus, any days of delay for Office issuance of the patent more than 3 years after the filing date of the application, which overlap with the days of patent term adjustment accorded prior to the issuance of the patent will not result in any additional patent term adjustment. See 35 U.S.C. 154(b)(1)(B), 35 U.S.C. 154(b)(2)(A), and 37 CFR § 1.703(f). See Changes to Implement Patent Term Adjustment Under Twenty Year Term; Final Rule, 65 Fed. Reg. 56366 (Sept. 18, 2000). See, also, Revision of Patent Term Extension and Patent Term Adjustment Provisions; Final Rule, 69 Fed. Reg. 21704 (April 22, 2004), 1282 Off. Gaz. Pat. Office 100 (May 18, 2004). See, also, Explanation of 37 CFR 1.703(f) and of the United States Patent and Trademark Office Interpretation of 35 U.S.C. 154(b)(2)(A), 69 Fed. Reg. 34283 (June 21, 2004).

The current wording of § 1.703(f) was revised in response to the misinterpretation of this provision by a number of Patentees. The rule was slightly revised to more closely track the corresponding language of 35 U.S.C. 154(b)(2)(A). The relevant portion differs only to the extent that the statute refers back to provisions of the statute whereas the rule refers back to sections of the rule. This was not a substantive change to the rule nor did it reflect a change of the Office's interpretation of 35 U.S.C. 154(b)(2)(A). As stated in the Explanation of 37 CFR 1.703(f) and of the United States Patent and Trademark Office Interpretation of 35 U.S.C. 154(b)(2)(A), the Office has consistently taken the position that if an application is entitled to an adjustment under the three-year pendency provision of 35 U.S.C. 154(b)(1)(B), the entire period during which the application was pending before the Office (except for periods excluded under 35 U.S.C. 154(b)(1)(B)(i)-(iii)), and not just the period beginning three years after the actual filing date of the application, is the relevant period under 35 U.S.C. 154(b)(1)(B) in determining whether periods of delay "overlap" under 35 U.S.C. 154(b)(2)(A).

This interpretation is consistent with the statute. Taken together the statute and rule provide that to the extent that periods of delay attributable to grounds specified in 35 U.S.C. 154(b)(1) and in corresponding § 1.702 overlap, the period of adjustment granted shall not exceed the actual number of days the issuance of the patent was delayed. The grounds specified in these sections cover the A) guarantee of prompt Patent and Trademark Office responses, B) guarantee of no more than 3-year application pendency, and C) guarantee or adjustments for delays due to interference, secrecy orders and appeals. A section by section analysis of 35 U.S.C. 154(b)(2)(A) specifically provides that:

> Section 4402 imposes limitations on restoration of term. In general, pursuant to [35 U.S.C.] 154(b)(2)(A)-(C), total adjustments granted for restorations under [35 U.S.C. 154](b)(1) are reduced as follows: (1) To the extent that there are multiple grounds for extending the term of a patent that may exist simultaneously (e.g., delay due to a secrecy order under [35 U.S.C.] 181 and administrative delay under [35 U.S.C.] 154(b)(1)(A)), the term should not be extended for each ground of delay but only for the actual number of days that the issuance of a patent was delayed; See, 145 Cong. Rec. S14,718[1].

[1] The AIPA is title IV of the Intellectual Property and Communications Omnibus Reform Act of 1999 (S. 1948), which was incorporated and enacted as law as part of Pub. L. 106-113. The

As such, the period for over three-year pendency does not overlap only to the extent that the actual dates in the period beginning three years after the date on which the application was filed overlap with the actual dates in the periods for failure of the Office to take action within specified time frames. In other words, consideration of the overlap does not begin three years after the filing date of the application.

In this instance, the relevant period under 35 U.S.C. 154(b)(1)(B) in determining whether periods of delay "overlap" under 35 U.S.C. 154(b)(2)(A) is the entire period during which the application was pending before the Office, August 25, 2003, to the date the patent issued on November 4, 2008. Prior to the issuance of the patent, 897 days of patent term adjustment were accorded for the Office failing to respond within a specified time frame during the pendency of the application.

The application actually issued three years and 802 days after its filing date. However, the Office did not delay 897 days and then delay an additional 802 days. Accordingly, 897 days of patent term adjustment (not 897 days and 802 days) was properly entered because the entire period of delay of 802 days attributable to the delay in the issuance of the patent overlaps with the adjustment of 897 days attributable to grounds specified in § 1.702(a)(1). Entry of both periods is not warranted.

In view thereof, no adjustment to the patent term will be made.

The Office acknowledges submission of the required application fee of $200.00. See, 37 CFR 1.18(e). The request for refund of the required application fee is hereby DISMISSED. Submission of the application fee is a prerequisite prior to treatment on the merits of any application for patent term adjustment.

Telephone inquiries specific to this matter should be directed to the undersigned at (571) 272-3205.

Alesia M. Brown
Petitions Attorney
Office of Petitions

Conference Report for H.R. 3194, 106th Cong. 1st Sess. (1999), which resulted in Pub. L. 106-113, does not contain any discussion (other than the incorporated language) of S. 1948. A section-by-section analysis of S. 1948, however, was printed in the Congressional Record at the request of Senator Lott, See 145 Cong. Rec. S14,708-26 (1999)(daily ed. Nov. 17, 1999).

UNITED STATES PATENT AND TRADEMARK OFFICE

Commissioner for Patents
United States Patent and Trademark Office
P.O. Box 1450
Alexandria, VA 22313-1450
www.uspto.gov
DIW 08-04

HUNTON & WILLIAMS LLP
INTELLECTUAL PROPERTY DEPARTMENT
1900 K STREET, N.W.
SUITE 1200
WASHINGTON DC 20006-1109

COPY MAILED

AUG 2 7 2004

OFFICE OF PETITIONS

In re Application of	:	
Donovan et al.	:	
Application No. 10/647,116	:	DECISION GRANTING PETITION
Filed: 25 August, 2003	:	
Attorney Docket No. 64557.000003	:	

This is a decision on the petition, filed on 2 July, 2004, under 37 CFR 1.137(f) which is treated as a petition to revive the above-identified nonprovisional application under the unintentional provisions of 37 CFR 1.137(b).

The petition is **GRANTED**.

Petitioner states that the present nonprovisional application is the subject of a foreign or international application filed on 3 November, 2003. However, the U.S. Patent and Trademark Office was unintentionally not notified of this filing within 45 days subsequent to the filing of the subject application in a foreign country.

In view of the above, this application became abandoned pursuant to 35 U.S.C. § 122(b)(2)(B)(iii) and 37 CFR 1.213(c) for failure to timely notify the Office of the filing of an application in a foreign country, or under a multilateral international agreement, that requires publication of applications 18 months after filing.

A petition under 37 CFR 1.137(f) must be accompanied by:

(1) the reply which is met by the notification of such filing in a foreign country or under a multinational treaty;
(2) the petition fee as set forth in 37 CFR 1.17(m);

and
(3) a statement that the entire delay in filing the required reply from the due date of the reply until the filing of a grantable petition was unintentional.

The present petition has been found to be in compliance with 37 CFR 1.137(f). Accordingly, the failure to timely notify the Office of a foreign or international filing within 45 days after the date of filing of such foreign or international application as provided by 35 U.S.C. § 122(b)(2)(B)(i) has been rescinded. It is noted that petitioner filed a Request to Rescind the Nonpublication Request on 2 July, 2004. A Communication stating the projected publication date is 9 December, 2004, is enclosed with this decision.

Counsel's deposit account, No. 50-0206, has been charged the petition fee of $1330.00.

This decision is being forwarded to the Office of Initial Patent Examination for further processing.

Any inquiries concerning this decision may be directed to the undersigned at 703.308.6918.

D Wood
Douglas I. Wood
Senior Petitions Attorney
Office of Petitions

Encl: Communication Regarding Rescission of Nonpublication Request and/or Notice of Foreign Filing

UNITED STATES PATENT AND TRADEMARK OFFICE

Commissioner for Patents
United States Patent and Trademark Office
P.O. Box 1450
Alexandria, VA 22313-1450
www.uspto.gov

JJGJR.: 09-07

Paper No: __

COPY MAILED

SEP 1 0 2007

OFFICE OF PETITIONS

ELLIOTT N. KRAMSKY, ESQ.
SUITE 400
5850 CANOGA AVENUE
WOODLAND HILLS CA 91367

In re Application of	:	
Grimes	:	DECISION
Application No.: 10/647,148	:	
Filing Date: 25 August, 2003	:	
Attorney Docket No. 437-101	:	

This is a decision on the petition filed on 6 March, 2007, to withdraw the holding of abandonment and considered under 37 C.F.R. §1.181.

The Office regrets the delay in addressing this matter, however, the instant petition was presented to the attorneys in the Office of Petitions only at this writing.[1]

The petition as considered under 37 C.F.R. §1.181 is **GRANTED**.

[1] NOTE: **Monitoring of the status of applications on PAIR can inform one's management of application responses and provide an indication when mailings of Office actions should be expected. Status Inquiries filed at three (3) or four (4) month intervals provide a demonstration of diligence and attention in supporting a petition seeking relief under 37 C.F.R. §1.181.**

BACKGROUND

The record reflects that:

- Petitioner failed to reply timely and properly to the Restriction requirement mailed on 9 November, 2004,with reply due absent extension of time on or before 9 December, 2004;
- the application went abandoned by operation of law after midnight 9 December, 2004;
- the Office mailed a Notice of Abandonment on 8 February, 2007;
- it is notable that Petitioner filed of record not one Status Inquiry in that period;
- on 6 March, 2007, Petitioner filed the instant petition with, *inter alia*, an averment that the Office action (Restriction) in fact required reply not within one (1) month, but within three (1) months, and Petitioner provided a copy of that Office action so evidencing, along with a copy of the reply in the form of an Election filed on 9 February, 2005, over a 7 February, 2005, certificate of mailing, as evidenced by Office records.

It appears that the Examiner may have corrected a typographical error on the Office record copy of the Restriction requirement mailed on 9 November, 2004, but that error was not corrected on the copy of the paper mailed to Petitioner.

Out of an abundance of caution, Petitioners always are reminded that the filing of a petition under 37 C.F.R. §1.181 does not toll any periods that may be running any action by the Office and a petition seeking relief under the regulation must be filed within two (2) months of the act complained of (see: 37 C.F.R. §1.181(f)); and those registered to practice *and* all others who make representations before the Office must inquire into the underlying facts of representations made to the Office and support averments with the appropriate documentation–since all owe to the Office the continuing duty to disclose.[2]

---

[2] See supplement of 17 June, 1999. The Patent and Trademark Office is relying on petitioner's duty of candor and good faith and accepting a statement made by Petitioner. See Changes to Patent Practice and Procedure, 62 Fed. Reg. at 53160 and 53178, 1203 Off. Gaz. Pat. Office at 88 and 103 (responses to comments 64 and 109)(applicant obligated under 37 C.F.R. §10.18 to inquire into the underlying facts and circumstances when providing statements to the Patent and Trademark Office).

Specifically, the regulations at 37 C.F.R. §10.18 provide:

§ 10.18 Signature and certificate for correspondence filed in the Patent and Trademark Office.
(a) For all documents filed in the Office in patent, trademark, and other non-patent matters, except for correspondence that is required to be signed by the applicant or party, each piece of correspondence filed by a practitioner in the Patent and Trademark Office must bear a signature by such practitioner complying with the provisions of §1.4(d), §1.4(e), or § 2.193(c)(1) of this chapter.
(b) By presenting to the Office (whether by signing, filing, submitting, or later advocating) any paper, the party presenting such paper, whether a practitioner or non-practitioner, is certifying that—
(1) All statements made therein of the party's own knowledge are true, all statements made therein on information and belief are

STATUTES, REGULATIONS AND ANALYSIS

Congress has authorized the Commissioner to "revive an application if the delay is shown to the satisfaction of the Commissioner to have been "unavoidable." 35 U.S.C. §133 (1994).[3]

The regulations at 37 C.F.R. §1.137(a) and (b) set forth the requirements for a petitioner to revive a previously unavoidably or unintentionally, respectively, abandoned application under this congressional grant of authority. The language of 35 U.S.C. §133 and 37 C.F.R. §1.137(a) is clear, unambiguous, and without qualification: the delay in tendering the reply to the outstanding Office action, as well as filing the first petition seeking revival, must have been unavoidable for the reply now to be accepted on petition.[4]

---

believed to be true, and all statements made therein are made with the knowledge that whoever, in any matter within the jurisdiction of the Patent and Trademark Office, knowingly and willfully falsifies, conceals, or covers up by any trick, scheme, or device a material fact, or makes any false, fictitious or fraudulent statements or representations, or makes or uses any false writing or document knowing the same to contain any false, fictitious or fraudulent statement or entry, shall be subject to the penalties set forth under 18 U.S.C. 1001, and that violations of this paragraph may jeopardize the validity of the application or document, or the validity or enforceability of any patent, trademark registration, or certificate resulting therefrom; and

(2) To the best of the party's knowledge, information and belief, formed after an inquiry reasonable under the circumstances, that —

(i) The paper is not being presented for any improper purpose, such as to harass someone or to cause unnecessary delay or needless increase in the cost of prosecution before the Office;

(ii) The claims and other legal contentions therein are warranted by existing law or by a nonfrivolous argument for the extension, modification, or reversal of existing law or the establishment of new law;

(iii) The allegations and other factual contentions have evidentiary support or, if specifically so identified, are likely to have evidentiary support after a reasonable opportunity for further investigation or discovery; and

(iv) The denials of factual contentions are warranted on the evidence, or if specifically so identified, are reasonably based on a lack of information or belief.

(c) Violations of paragraph (b)(1) of this section by a practitioner or non-practitioner may jeopardize the validity of the application or document, or the validity or enforceability of any patent, trademark registration, or certificate resulting therefrom. Violations of any of paragraphs (b)(2)(i) through (iv) of this section are, after notice and reasonable opportunity to respond, subject to such sanctions as deemed appropriate by the Commissioner, or the Commissioner's designee, which may include, but are not limited to, any combination of —

(1) Holding certain facts to have been established;

(2) Returning papers;

(3) Precluding a party from filing a paper, or presenting or contesting an issue;

(4) Imposing a monetary sanction;

(5) Requiring a terminal disclaimer for the period of the delay; or

(6) Terminating the proceedings in the Patent and Trademark Office.

(d) Any practitioner violating the provisions of this section may also be subject to disciplinary action. See § 10.23(c)(15).

[Added 50 FR 5175, Feb. 6, 1985, effective Mar. 8, 1985; para. (a) revised, 58 FR 54494, Oct. 22, 1993, effective Nov. 22, 1993; paras. (a) & (b) revised, paras. (c) & (d) added, 62 FR 53131, Oct. 10, 1997, effective Dec. 1, 1997; para. (a) revised, 69 FR 56481, Sept. 21, 2004, effective Oct. 21, 2004]

[3] 35 U.S.C. §133 provides:

35 U.S.C. §133 Time for prosecuting application.

Upon failure of the applicant to prosecute the application within six months after any action therein, of which notice has been given or mailed to the applicant, or within such shorter time, not less than thirty days, as fixed by the Commissioner in such action, the application shall be regarded as abandoned by the parties thereto, unless it be shown to the satisfaction of the Commissioner that such delay was unavoidable.

[4] Therefore, by example, an unavoidable delay in the payment of the Filing Fee might occur if a reply is shipped by the US Postal Service, but due to catastrophic accident, the delivery is not made.

Delays in responding properly raise the question whether delays are unavoidable.[5] Where there is a question whether the delay was unavoidable, Petitioners must meet the burden of establishing that the delay was unavoidable within the meaning of 35 U.S.C. §133 and 37 C.F.R. §1.137(a).[6]

And the Petitioner must be diligent in attending to the matter.[7] Failure to do so does not constitute the care required under Pratt, and so cannot satisfy the test for diligence and due care.

(By contrast, unintentional delays are those that do not satisfy the very strict statutory and regulatory requirements of unavoidable delay, and also, by definition, are not intentional.[8]))

Allegations as to the Request to
Withdraw the Holding of Abandonment

The courts have determined the construct for properly supporting a petition seeking withdrawal of a holding of abandonment.[9]

The commentary at MPEP §711.03(c) provides:

* * *

> **B. Petition To Withdraw Holding of Abandonment Based on Evidence That a Reply Was Timely Mailed or Filed**
>
> 37 C.F.R. §1.10(c) through §1.10(e) and §1.10(g) set forth procedures for petitioning the Director of the USPTO to accord a filing date to correspondence as of the date of deposit of the correspondence as "Express Mail." A petition to withdraw the holding of abandonment relying upon a timely reply placed in "Express Mail" must include an appropriate petition under 37 C.F.R. §1.10(c), (d), * (e), or (g) (see MPEP § 513). When a paper is shown to have been mailed to the Office using the "Express

---

[5] See: *Changes to Patent Practice and Procedure; Final Rule Notice*, 62 *Fed. Reg.* at 53158-59 (October 10, 1997), 1203 *Off. Gaz. Pat. Office* at 86-87 (October 21, 1997).

[6] See: In re Application of G, 11 USPQ2d 1378, 1380 (Comm'r Pats. 1989).

[7] See: Diligence in Filing Petitions to Revive and Petitions to Withdraw the Holding of Abandonment, 1124 Off. Gaz. Pat. Office 33 (March 19, 1991). It was and is Petitioner's burden to exercise diligence in seeking either to have the holding of abandonment withdrawn or the application revived. See 1124 Off. Gaz. Pat. Office supra.

[8] Therefore, by example, an unintentional delay in the reply might occur if the reply and transmittal form are to be prepared for shipment by the US Postal Service, but other pressing matters distract one's attention and the mail is not timely deposited for shipment.

[9] See: Delgar v. Schulyer, 172 USPQ 513 (D.D.C. 1971).

Mail" procedures, the paper must be entered in PALM with the "Express Mail" date.

Similarly, applicants may establish that a reply was filed with a postcard receipt that properly identifies the reply and provides *prima facie* evidence that the reply was timely filed. See MPEP § 503. For example, if the application has been held abandoned for failure to file a reply to a first Office action, and applicant has a postcard receipt showing that an amendment was timely filed in response to the Office action, then the holding of abandonment should be withdrawn upon the filing of a petition to withdraw the holding of abandonment. When the reply is shown to have been timely filed based on a postcard receipt, the reply must be entered into PALM using the date of receipt of the reply as shown on the post card receipt.

Where a certificate of mailing under 37 C.F.R. §1.8, but not a postcard receipt, is relied upon in a petition to withdraw the holding of abandonment, see 37 C.F.R. §1.8(b) and MPEP § 512. As stated in 37 C.F.R §1.8(b)(3) the statement that attests to the previous timely mailing or transmission of the correspondence must be on a personal knowledge basis, or to the satisfaction of the Director of the USPTO. If the statement attesting to the previous timely mailing is not made by the person who signed the Certificate of Mailing (i.e., there is no personal knowledge basis), then the statement attesting to the previous timely mailing should include evidence that supports the conclusion that the correspondence was actually mailed (e.g., copies of a mailing log establishing that correspondence was mailed for that application). When the correspondence is shown to have been timely filed based on a certificate of mailing, the correspondence is entered into PALM with the actual date of receipt (i.e., the date that the duplicate copy of the papers was filed with the statement under 37 C.F.R. §1.8).

37 C.F.R. §1.8(b) also permits applicant to notify the Office of a previous mailing or transmission of correspondence and submit a statement under 37 C.F.R. 1.8(b)(3) accompanied by a duplicate copy of the correspondence when a reasonable amount of time (e.g., more than one month) has elapsed from the time of mailing or transmitting of the correspondence. Applicant does not have to wait until the application becomes abandoned before notifying the

> Office of the previous mailing or transmission of the correspondence. Applicant should check the private Patent Application Information Retrieval (PAIR) system for the status of the correspondence before notifying the Office. See MPEP § 512.
>
> * * *

Moreover, the regulation places upon Petitioner a diligence requirement to seek relief within two (2) months of the act complained of.

It appears that Petitioner has satisfied the showing as discussed above.

CONCLUSION

The petition as considered under 37 C.F.R. §1.181 is **granted**, and the 8 February, 2007, Notice of Abandonment is **vacated**.

The instant application is released to Technology Center 3700 for further processing in due course.

While telephone inquiries regarding this decision may be directed to the undersigned at (571) 272-3214, it is noted that all practice before the Office is in writing (see: 37 C.F.R. §1.2[10]) and the proper authority for action on any matter in this regard are the statutes (35 U.S.C.), regulations (37 C.F.R.) and the commentary on policy (MPEP). Therefore, no telephone discussion may be controlling or considered authority for Petitioner's action(s).

John J. Gillon, Jr.
Senior Attorney
Office of Petitions

---

[10] The regulations at 37 C.F.R. §1.2 provide:

§1.2 Business to be transacted in writing.

All business with the Patent and Trademark Office should be transacted in writing.The personal attendance of applicants or their attorneys or agents at the Patent and Trademark Office is unnecessary. The action of the Patent and Trademark Office will be based exclusively on the written record in the Office. No attention will be paid to any alleged oral promise, stipulation,or understanding in relation to which there is disagreement or doubt.

UNITED STATES PATENT AND TRADEMARK OFFICE

Commissioner for Patents
United States Patent and Trademark Office
P.O. Box 1450
Alexandria, VA 22313-1450
www.uspto.gov

Jones Day
222 East 41st Street
New York, NY 10017

COPY MAILED

OCT 0 2 2006

OFFICE OF PETITIONS

In re Application of :
Alexander C. Chang :
Application No. 10/647,161 : DECISION ON PETITION
Filed: August 21, 2003 : TO WITHDRAW
Attorney Docket No. 11393-003-999 : FROM RECORD
:

This is a decision on the Request to Withdraw as attorney or agent of record under 37 C.F.R. § 1.36(b), filed June 13, 2006.

The request is **APPROVED**.

A grantable request to withdraw as attorney/agent of record must be signed by every attorney/agent seeking to withdraw or contain a clear indication that one attorney is signing on behalf of another/others. A request to withdraw will not be approved unless at least 30 (thirty) days would remain between the date of approval and the later of the expiration date of a time to file a response or the expiration date of the maximum time period which can be extended under 37 C.F.R. § 1.136(a).

The request was signed by Brett Lovejoy on behalf of all attorneys of record who are associated with Customer No. 20583.

All attorneys/agents associated with the Customer No. 20583 have been withdrawn.

Applicant is reminded that there is no attorney of record at this time.

All future correspondence will be directed to the first named inventor Alexander Chang at the address indicated below.

There is no outstanding Office action at this time.

Telephone inquiries concerning this decision should be directed to Terri Williams at 571-272-2991.

Amelia Au
Petitions Examiner
Office of Petitions

cc: **Alexander C. Chang, M.D.**
5301 Waverly Drive, #159
Palm Springs, CA 92264-6174

UNITED STATES PATENT AND TRADEMARK OFFICE

UNITED STATES DEPARTMENT OF COMMERCE
United States Patent and Trademark Office
Address: COMMISSIONER FOR PATENTS
P.O. Box 1450
Alexandria, Virginia 22313-1450
www.uspto.gov

APPLICATION NUMBER	FILING OR 371 (c) DATE	FIRST NAMED APPLICANT	ATTY. DOCKET NO./TITLE
10/647,161	08/21/2003	Alexander C. Chang	11393-003-999

CONFIRMATION NO. 1544

OC000000020653330

OC000000020653330

20583
JONES DAY
222 EAST 41ST ST
NEW YORK, NY 10017

Date Mailed: 10/02/2006

NOTICE REGARDING CHANGE OF POWER OF ATTORNEY

This is in response to the Power of Attorney filed 06/13/2006.

- The withdrawal as attorney in this application has been accepted. Future correspondence will be mailed to the new address of record. 37 CFR 1.33.

J. Williams

TERRI S WILLIAMS
OP (571) 272-2991

FORMER ATTORNEY/AGENT COPY

UNITED STATES PATENT AND TRADEMARK OFFICE

Commissioner for Patents
United States Patent and Trademark Office
P.O. Box 1450
Alexandria, VA 22313-1450
www.uspto.gov

LEONG C LEI
PMB # 1008
1867 YGNACIO VALLEY ROAD
WALNUT CREEK CA 94598

COPY MAILED

DEC 23 2005

OFFICE OF PETITIONS

In re Application of :
Ling Lang Liu :
Application No. 10/647,175 : ON PETITION
Filed: August 25, 2003 :
Attorney Docket No. FP 9698 :

This is a decision on the petition under 37 CFR 1.137(b)[1], filed November 14, 2005, to revive the above-identified application.

The petition is **GRANTED**.

This application became abandoned for failure to timely reply to the final Office Action mailed March 7, 2005. A response was filed July 7, 2005 with a one month extension of time request, but by Advisory Action of July 20, 2005, petitioner was advised that the response did not place the application in condition for allowance. This application became abandoned on June 8, 2005. Accordingly, the Notice of Abandonment was mailed November 14, 2005, the same day the instant petition was filed.

Petitioner has submitted a Request for Continued Examination (RCE) and has indicated that the amendment filed July 7, 2005 should serve as the submission required under 37 CFR 1.114.

This matter is being referred to Technology Center 3723 for processing of the RCE.

Telephone inquiries related to this decision should be directed to the undersigned Petitions Attorney at (571) 272-3212.

Patricia Faison-Ball
Senior Petitions Attorney
Office of Petitions

---

[1]Effective December 1, 1997, the provisions of 37 CFR 1.137(b) now provide that where the delay in reply was unintentional, a petition may be filed to revive an abandoned application or a lapsed patent pursuant to 37 CFR 1.137(b). A grantable petition filed under the provisions of 37 CFR 1.137(b) must be accompanied by:

(1) the required reply, unless previously filed. In a nonprovisional application abandoned for failure to prosecute, the required reply may be met by the filing of a continuing application. In an application or patent, abandoned or lapsed for failure to pay the issue fee or any portion thereof, the required reply must be the payment of the issue fee or any outstanding balance thereof.

(2) the petition fee as set forth in 37 CFR 1.17(m);

(3) a statement that the entire delay in filing the required reply from the due date for the reply until the filing of a grantable petition pursuant to 37 CFR 1.137(b) was unintentional. The Commissioner may required additional information where there is a question whether the delay was unintentional; and

(4) any terminal disclaimer (and fee as set forth in 37 CFR 1.20(d)) required pursuant to 37 CFR 1.137(c)).

UNITED STATES PATENT AND TRADEMARK OFFICE

Commissioner for Patents
United States Patent and Trademark Office
P.O. Box 1450
Alexandria, VA 22313-1450
www.uspto.gov

Patrick J S Inouye P.S.
810 3rd Avenue
Suite 258
Seattle, WA 98104

MAILED

JUL 0 5 2005

Technology Center 2100

In re Application of:
Alexander FRANZ, et al.
Application No.: 10/647,203
Filed: August 21, 2003
For: SYSTEM AND METHOD FOR IDENTIFYING COMPOUNDS THROUGH ITERATIVE ANALYSIS

DECISION ON REQUEST TO WITHDRAW AS ATTORNEY OR AGENT

This is a decision on the Request to Withdraw from Representation filed February 28, 2005.

A grantable request to withdraw as attorney of record should indicate thereon the present mailing addresses of the attorney(s) who is/are withdrawing from the record and of the applicant. The request for withdrawal must be signed by every attorney seeking to withdraw or contain a clear indication that one attorney is signing on behalf of another/others. A request to withdraw will not be approved unless at least 30 (thirty) days would remain between the date of approval and the later of the expiration date of a time to file a response or the expiration date of the maximum time period which can be extended under 37 C.F.R. § 1.136(a). The effective date of withdrawal being the date of decision and not the date of request. See M.P.E.P. § 402.06. 37 C.F.R. § 1.36 further requires that the applicant or patent owner be notified of the withdrawal of the attorney or agent.

The request is **GRANTED**.

All future communications from the Office will be directed to the below-listed address until otherwise notified by applicant. This correspondence address is provided by the withdrawn attorney(s). Applicant is reminded of the obligation to promptly notify the Patent and Trademark Office (Office) of any change in correspondence address to ensure receipt of all communications from the Office.

for

Vincent N. Trans
Special Program Examiner
Technology Center 2100
Computer Architecture, Software, and
Information Security
571-272-3613

cc: Kulpreet Rana
Google, Inc.
1600 Amphitheatre Parkway, Bldg. 41
Mountain View, CA 94043

UNITED STATES PATENT AND TRADEMARK OFFICE

Commissioner for Patents
United States Patent and Trademark Office
P.O. Box 1450
Alexandria, VA 22313-1450
www.uspto.gov

Paper No.

FISH & RICHARDSON P.C.
PO BOX 1022
MINNEAPOLIS MN 55440-1022

MAILED

NOV 19 2009

OFFICE OF PETITIONS

In re Patent No. 7,555,428	:	DECISION
Franz et al.	:	DISMISSING REQUEST FOR
Issue Date: June 30, 2009	:	RECONSIDERATION OF PATENT
Application No. 10/647,203	:	TERM ADJUSTMENT
Filed: August 21, 2003	:	UNDER 37 CFR 1.705
Attorney Docket No.	:	
16113-1230001 / GP-038-00	:	

This is a decision on the "APPLICATION FOR PATENT TERM ADJUSTMENT UNDER 37 C.F.R. § 1.705(d)," filed on August 31, 2009. Patentees request that the Patent Term Adjustment for the above-identified patent be increased by 341 days from 574 days to 915 days.

The request for reconsideration of patent term adjustment is **DISMISSED** with respect to making any change in the patent term adjustment determination under 35 U.S.C. § 154(b) of 574 days.

BACKGROUND

On June 30, 2009, the above-identified application matured into U.S. Patent No. 7,555,428, with a revised Patent Term Adjustment of 574 days. On Monday, August 31, 2009, the subject request for reconsideration was filed.

The Office determined that the 491 days of Office delay pursuant to 35 U.S.C. 154(b)(1)(B) and 37 CFR 1.702(b) overlaps with the 820 days of Office delay pursuant to 35 U.S.C. 154(b)(1)(A) and 37 CFR 1.702(a)(1) accorded prior to the filing of the request for continued examination. As such, no additional days of patent term adjustment were entered at issuance under the three-year pendency provision. Given the applicant delay of 246 days, the patent issued with a revised patent term adjustment of 574 (820 - 246) days.

On August 31, 2009, patentees timely submitted this request for reconsideration of patent term adjustment (with required fee), asserting that the correct number of days of Patent Term Adjustment is 915 days under the courts' interpretation of the overlap provision as set forth in Wyeth v. Dudas, 580 F. Supp. 2d 138, 88 U.S.P.Q. 2d 1538 (D.D.C. 2008). Patentees asserts that pursuant to Wyeth, a PTO delay under §154(b)(1)(A) overlaps with a delay under §154(b)(1)(B) only if the delays "occur on the same day." Patentees maintain that the total non-overlapping PTO delay under §154(b)(1)(A) & (B) is 1161 (820 + 492 -151 overlap) days as these periods do not occur on the same day. Further, given the applicant delay of 246 days, patentees assert entitlement to 915 (1161 - 246) days of patent term adjustment.

OPINION

Patentees' interpretation of the period of overlap has been considered, but found inconsistent with the Office's interpretation of the overlap provision, 35 U.S.C. 154(b)(2)(A). 35 U.S.C. 154(b)(2)(A) limits the adjustment of patent term, as follows:

> to the extent that the periods of delay attributable to grounds specified in paragraph (1) overlap, the period of any adjustment granted under this subsection shall not exceed the actual number of days the issuance of the patent was delayed.

As explained in *Explanation of 37 CFR 1.703(f) and of the United States Patent and Trademark Office Interpretation of 35 U.S.C. 154(b)(2)(A)*, 69 Fed. Reg. 34283 (June 21, 2004), the Office interprets 35 U.S.C. 154(b)(2)(A) as permitting either patent

term adjustment under 35 U.S.C. 154(b)(1)(A)(i)-(iv), or patent term adjustment under 35 U.S.C. 154(b)(1)(B), but not as permitting patent term adjustment under both 35 U.S.C. 154(b)(1)(A)(i)-(iv) and 154(b)(1)(B). Accordingly, the Office implements the overlap provision as follows:

> If an application is entitled to an adjustment under 35 U.S.C. 154(b)(1)(B), the entire period during which the application was pending (except for periods excluded under 35 U.S.C. 154(b)(1)(B)(i)-(iii)), and not just the period beginning three years after the actual filing date of the application, is the period of delay under 35 U.S.C. 154(b)(1)(B) in determining whether periods of delay overlap under 35 U.S.C. 154(b)(2)(A). Thus, any days of delay for Office issuance of the patent more than 3 years after the filing date of the application, which overlap with the days of patent term adjustment accorded prior to the issuance of the patent will not result in any additional patent term adjustment. See 35 U.S.C. 154(b)(1)(B), 35 U.S.C. 154(b)(2)(A), and 37 CFR § 1.703(f). See *Changes to Implement Patent Term Adjustment Under Twenty Year Term; Final Rule*, 65 Fed. Reg. 56366 (Sept. 18, 2000). See also *Revision of Patent Term Extension and Patent Term Adjustment Provisions; Final Rule*, 69 Fed. Reg. 21704 (April 22, 2004), 1282 Off. Gaz. Pat. Office 100 (May 18, 2004). See also *Explanation of 37 CFR 1.703(f) and of the United States Patent and Trademark Office Interpretation of 35 U.S.C. 154(b)(2)(A)*, 69 Fed. Reg. 34283 (June 21, 2004).

Further, as stated in the *Explanation of 37 CFR 1.703(f) and of the United States Patent and Trademark Office Interpretation of 35 U.S.C. 154(b)(2)(A)*, the Office has consistently taken the position that if an application is entitled to an adjustment under the three-year pendency provision of 35 U.S.C. 154(b)(1)(B), the entire period during which the application was pending before the Office (except for periods excluded under 35 U.S.C. 154(b)(1)(B)(i)-(iii)), and not just the period beginning three years after the actual filing date of the application (or, in an international application, the date that the national stage commenced under 35 U.S.C. 371(b) or (f), is the relevant period under 35 U.S.C. 154(b)(1)(B) in determining whether periods of delay "overlap" under 35 U.S.C. 154(b)(2)(A).

This interpretation is consistent with the statute. Taken together the statute and rule provide that to the extent that periods of delay attributable to grounds specified in 35 U.S.C. 154(b)(1) and in corresponding §1.702 overlap, the period of adjustment granted shall not exceed the actual number of days the issuance of the patent was delayed.

In this instance, the relevant period under 35 U.S.C. 154(b)(1)(B) in determining whether periods of delay "overlap" under 35 U.S.C. 154(b)(2)(A) is the period during which the application was pending before the Office beginning on the application filing date, August 21, 2003, and ending on December 25, 2007, the day before the date of filing of a request for continued examination (RCE) (not including any other periods excluded under 35 U.S.C. 154(b)(1)(B)(i)-(iii)). The relevant period ends with the filing of the RCE as the three-year time frame specified in 35 U.S.C. 154(b)(1)(B) does not include the period subsequent to the filing of the RCE. 35 U.S.C. 154(b)(1)(B)(i).

Pursuant to 35 U.S.C. 154(b)(1)(A) and 37 CFR 1.702(a)(1), 820 days of patent term adjustment were accorded during the pendency of the application for Office delay prior to the filing of the request for continued examination. Pursuant to 35 U.S.C. 154(b)(1)(B) and 37 CFR 1.702(b), 491 days of patent term adjustment accrued for Office issuance of the patent more than 3 years after the filing date of the application.

The 491 days of patent term adjustment under 37 CFR 1.702(b) overlap with the 820 days of patent term adjustment under 37 CFR 1.702(a)(1). Entry of both the 820 days and the 491 days is neither permitted nor warranted. Considering the applicant delay of 246 days, the correct patent term adjustment is 574 (820 - 246) days.

CONCLUSION

In view thereof, no change will be made in the revised determination of patent term adjustment at the time of the issuance of the patent.

The Office acknowledges submission of the $200.00 fee set forth in 37 CFR 1.18(e). No additional fees are required.

Telephone inquiries specific to this matter should be directed to Senior Petitions Attorney Douglas I. Wood, at (571) 272-3231.

Christina Parker Donnell for

Anthony Knight
Supervisor
Office of Petitions

UNITED STATES PATENT AND TRADEMARK OFFICE

Commissioner for Patents
United States Patent and Trademark Office
P.O. Box 1450
Alexandria, VA 22313-1450
www.uspto.gov

COPY MAILED

APR 13 2007

OFFICE OF PETITIONS

ARMSTRONG, KRATZ, QUINTOS, HANSON & BROOKS, LLP
1725 K STREET, NW
SUITE 1000
WASHINGTON DC 20006

In re Application of :
Kazunori Yamanaka et al :
Application No. 10/647,237 : ON PETITION
Filed: August 26, 2003 :
Attorney Docket No. 031031 :

This is a decision on the petition, filed April 13, 2007, under 37 CFR 1.313(c)(2) to withdraw the above-identified application from issue after payment of the issue fee.

The petition is **GRANTED.**

The above-identified application is withdrawn from issue for consideration of a submission under 37 CFR 1.114 (request for continued examination). See 37 CFR 1.313(c)(2).

Petitioner is advised that the issue fee paid on February 15, 2007 in the above-identified application cannot be refunded. If, however, the above-identified application is again allowed, petitioner may request that it be applied towards the issue fee required by the new Notice of Allowance.[1]

Telephone inquiries should be directed to the undersigned at (571) 272-3208.

The examiner of Technology Center AU 2817 will consider the request for continued examination under 37 CFR 1.114.

Karen Creasy

Karen Creasy
Petitions Examiner
Office of Petitions

[1] The request to apply the issue fee to the new Notice may be satisfied by completing and returning the new Issue Fee Transmittal Form PTOL-85(b), which includes the following language thereon: "Commissioner for Patents is requested to apply the Issue Fee and Publication Fee (if any) or re-apply any previously paid issue fee to the application identified above." Petitioner is advised that, whether a fee is indicated as being due or not, the Issue Fee Transmittal Form **must** be completed and timely submitted to avoid abandonment. Note the language in bold text on the first page of the Notice of Allowance and Fee(s) Due (PTOL-85).

UNITED STATES PATENT AND TRADEMARK OFFICE

Commissioner for Patents
United States Patent and Trademark Office
P.O. Box 1450
Alexandria, VA 22313-1450
www.uspto.gov

MAIL

DEC - 9 2004

DIRECTOR OFFICE
TECHNOLOGY CENTER 2100

ANTONELLI, TERRY, STOUT & KRAUS, LLP
1300 NORTH SEVENTEENTH STREET
SUITE 1800
ARLINGTON, VA 22209-9889

In re Application of: Mogi, et al.
Application No. 10/647,261
Filed: August 26, 2003
For: DATA PREFETCHING METHOD

DECISION ON PETITION
TO MAKE SPECIAL
(ACCELERATED EXAMINATION)
UNDER M.P.E.P. §708.02 (VIII)

This is a response to the petition filed September 14, 2004, under 37 C.F.R. §1.102(d) and M.P.E.P. §708.02 (VIII): Accelerated Examination, to make the above-identified application special.

The Petition is **DISMISSED**.

M.P.E.P. §708.02, Section VIII which sets out the prerequisites for a grantable petition for Accelerated Examination under 37 C.F.R. §1.102(d) states in relevant part:

A new application (one which has not received any examination by the examiner) may be granted special status provided that applicant (and this term includes applicant's attorney or agent) complies with each of the following items:

(a) Submits a petition to make special accompanied by the fee set forth in **37 CFR 1.17(h)**;

(b) Presents all claims directed to a single invention, or if the Office determines that all the claims presented are not obviously directed to a single invention, will make an election without traverse as a prerequisite to the grant of special status;

(c) Submits a statement(s) that a pre-examination search was made, listing the field of search by class and subclass, publication, Chemical Abstracts, foreign patents, etc. The pre-examination search must be directed to the invention as claimed in the application for which special status is requested. A search made by a foreign patent office satisfies this requirement;

(d) Submits one copy each of the references deemed most closely related to the subject matter encompassed by the claims if said references are not already of record; and

(e) Submits a detailed discussion of the references, which discussion points out, with the particularity required by 37 CFR 1.111 (b) and (c), how the claimed subject matter is patentable over the references.

The petition filed September 14, 2004 fails to adequately meet requirement (e) of the criteria set forth above. With respect to requirement (e), all of the claims do not recite the particularly distinct features relied upon in applicant's arguments. Specifically, claims 13, 15, and 16 do not recite the distinct features of "sampling a processing content which satisfies given conditions from a content of processing which is executed by the database management system, determining a prefetching method based on the sampled content and instructing prefetching of data based on the determined prefetching method to the storage device when the content of the processing is executed". Petitioner should ensure that the above discussion is directed to how the language of **each of the independent claims** are specifically distinguishable and patentable from the references provided in requirement (d) above.

Petition to Make Special **DISMISSED**.

Petitioner is given one opportunity to perfect the petition. Any request for reconsideration must be filed within TWO MONTHS of the mail date of this decision.

Until the renewed petition is submitted, the application will be returned to the examiner's docket to await treatment on the merits in the normal order of examination.

12/6/04

Brian L. Johnson
Special Program Examiner
Technology Center 2100
Computer Architecture, Software and Information Security
571-272-3595

MBS

UNITED STATES PATENT AND TRADEMARK OFFICE

Commissioner for Patents
United States Patent and Trademark Office
P.O. Box 1450
Alexandria, VA 22313-1450
www.uspto.gov

MAIL

MAR 1 4 2005

DIRECTOR OFFICE
TECHNOLOGY CENTER 2100

MATTINGLY, STANGER, & MALUR, P.C.
1800 DIAGONAL ROAD
SUITE 370
ALEXANDRIA, VA 22314

In re Application of: Mogi, et al.
Application No. 10/647,261
Filed: August 26, 2003
For: DATA PREFETCHING METHOD

DECISION ON PETITION
TO MAKE SPECIAL
(ACCELERATED
EXAMINATION)
UNDER M.P.E.P. §708.02 (VIII)

This is a response to the Request for Reconsideration filed January 6, 2005, on the Petition to make Special under 37 C.F.R. §1.102(d) and M.P.E.P. §708.02 (VIII): Accelerated Examination, originally filed on September 14, 2004 and dismissed on December 9, 2004.

The Reconsideration of Petition is **GRANTED**.

M.P.E.P. §708.02, Section VIII which sets out the prerequisites for a grantable petition for Accelerated Examination under 37 C.F.R. §1.102(d) states in relevant part:

A new application (one which has not received any examination by the examiner) may be granted special status provided that applicant (and this term includes applicant's attorney or agent) complies with each of the following items:

(a) Submits a petition to make special accompanied by the fee set forth in **37 CFR 1.17(h)**;

(b) Presents all claims directed to a single invention, or if the Office determines that all the claims presented are not obviously directed to a single invention, will make an election without traverse as a prerequisite to the grant of special status;

(c) Submits a statement(s) that a pre-examination search was made, listing the field of search by class and subclass, publication, Chemical Abstracts, foreign patents, etc. The pre-examination search must be directed to the invention as claimed in the application for which special status is requested. A search made by a foreign patent office satisfies this requirement;

(d) Submits one copy each of the references deemed most closely related to the subject matter encompassed by the claims if said references are not already of record; and

(e) Submits a detailed discussion of the references, which discussion points out, with the particularity required by 37 CFR 1.111 (b) and (c), how the claimed subject matter is patentable over the references.

Reconsideration of Petition to Make Special **GRANTED** since all of the requirements for special status under MPEP § 708.02(VIII) have been met.

The application file is being forwarded to the Examiner for accelerated examination in accordance with the procedures set forth in M.P.E.P. §708.02, Section VIII. If the application is subsequently allowed, it will be given priority for printing. See M.P.E.P. §1309.

Brian L. Johnson
Special Program Examiner
Technology Center 2100
Computer Architecture, Software and Information Security
571-272-3595

SDL: 03/08/05

UNITED STATES PATENT AND TRADEMARK OFFICE

Commissioner for Patents
United States Patent and Trademark Office
P.O. Box 1450
Alexandria, VA 22313-1450
www.uspto.gov

RABIN & BERDO, PC
1101 14TH STREET NW - SUITE 500
WASHINGTON, DC 20005

COPY MAILED

SEP 28 2007

OFFICE OF PETITIONS

In re Application of :
Chien-Ching Shen :
Application No. 10/647,264 : ON PETITION
Filed: June 26, 2003 :
Attorney Docket No. SUND 475 :

This is a decision on the petition under 37 CFR 1.137(b), filed April 24, 2007, to revive the above-identified application.

The petition is **GRANTED.**

Initially, it is noted that the petition states that a petition to revive was initially filed on February 21, 2007, as shown by the accompanying postcard receipt. It is noted that the petition submitted on February 21, 2007 is captioned for Application No. 10/674,264 rather than for this application. As a result of the incorrect caption on the petition, the papers filed on February 21, 2007 were associated with the case to which the petition was directed. Since the papers submitted contained sufficient information to associate those papers with this file, the papers will be moved from the incorrect application to this application.

Petitioner should ensure that the correct identifying data appears on all papers submitted to the USPTO in order to avoid delays in acting on the application. As the petition fee was filed in the correct application on April 24, 2007, the fee filed with the petition on February 21, 2007 will be refunded to petitioner's credit card in due course.

This application became abandoned for failure to submit corrected replacement drawings on or before September 15, 2006 in reply to the Notice of Allowability, mailed June 15, 2006, which set a period for reply of three (3) months. Accordingly, this application became abandoned on September 16, 2006. A Notice of Abandonment was mailed on February 7, 2007.

The petition satisfies the requirements of 37 CFR 1.137(b) in that petitioner has supplied (1) the required reply in the form of replacement drawings; (2) the petition fee of $1,500; and (3) a proper statement of unintentional delay. Accordingly, the failure to timely reply to the Notice of June 15, 2006 is accepted as being unintentionally delayed.

This application is being referred to Publishing Division for further processing in accordance with this decision accepting the unintentionally delayed submission of replacement drawings.

Telephone inquiries concerning this decision should be directed to the undersigned at (571) 272-3218.

Frances Hicks
Petitions Examiner
Office of Petitions

UNITED STATES PATENT AND TRADEMARK OFFICE

UNITED STATES DEPARTMENT OF COMMERCE
United States Patent and Trademark Office
Address: COMMISSIONER FOR PATENTS
P.O. Box 1450
Alexandria, Virginia 22313-1450
www.uspto.gov

APPL NO.	FILING OR 371 (c) DATE	ART UNIT	FIL FEE REC'D	ATTY.DOCKET NO	DRAWINGS	TOT CLMS	IND CLMS
10/647,269	08/22/2003	2154	888	9407-5	6	23	4

CONFIRMATION NO. 2069

CORRECTED FILING RECEIPT

OC000000011820739

Laura M. Kelley
Myers Bigel Sibley & Sajovec, P.A.
P.O. Box 37428
Raleigh, NC 27627

Date Mailed: 02/03/2004

Receipt is acknowledged of this regular Patent Application. It will be considered in its order and you will be notified as to the results of the examination. Be sure to provide the U.S. APPLICATION NUMBER, FILING DATE, NAME OF APPLICANT, and TITLE OF INVENTION when inquiring about this application. Fees transmitted by check or draft are subject to collection. Please verify the accuracy of the data presented on this receipt. **If an error is noted on this Filing Receipt, please write to the Office of Initial Patent Examination's Filing Receipt Corrections, facsimile number 703-746-9195. Please provide a copy of this Filing Receipt with the changes noted thereon. If you received a "Notice to File Missing Parts" for this application, please submit any corrections to this Filing Receipt with your reply to the Notice. When the USPTO processes the reply to the Notice, the USPTO will generate another Filing Receipt incorporating the requested corrections (if appropriate).**

Applicant(s)

Steven Lingafelt, Durham, NC;
Gerald Marko, North Glenn, CO;

Domestic Priority data as claimed by applicant

Foreign Applications

If Required, Foreign Filing License Granted: 11/17/2003

Projected Publication Date: 02/24/2005

Non-Publication Request: No

Early Publication Request: No

Title

Methods, systems and computer program products for providing status information to a device attached to an information infrastructure

Preliminary Class

709

LICENSE FOR FOREIGN FILING UNDER
Title 35, United States Code, Section 184
Title 37, Code of Federal Regulations, 5.11 & 5.15

GRANTED

The applicant has been granted a license under 35 U.S.C. 184, if the phrase "IF REQUIRED, FOREIGN FILING LICENSE GRANTED" followed by a date appears on this form. Such licenses are issued in all applications where the conditions for issuance of a license have been met, regardless of whether or not a license may be required as set forth in 37 CFR 5.15. The scope and limitations of this license are set forth in 37 CFR 5.15(a) unless an earlier license has been issued under 37 CFR 5.15(b). The license is subject to revocation upon written notification. The date indicated is the effective date of the license, unless an earlier license of similar scope has been granted under 37 CFR 5.13 or 5.14.

This license is to be retained by the licensee and may be used at any time on or after the effective date thereof unless it is revoked. This license is automatically transferred to any related applications(s) filed under 37 CFR 1.53(d). This license is not retroactive.

The grant of a license does not in any way lessen the responsibility of a licensee for the security of the subject matter as imposed by any Government contract or the provisions of existing laws relating to espionage and the national security or the export of technical data. Licensees should apprise themselves of current regulations especially with respect to certain countries, of other agencies, particularly the Office of Defense Trade Controls, Department of State (with respect to Arms, Munitions and Implements of War (22 CFR 121-128)); the Office of Export Administration, Department of Commerce (15 CFR 370.10 (j)); the Office of Foreign Assets Control, Department of Treasury (31 CFR Parts 500+) and the Department of Energy.

NOT GRANTED

No license under 35 U.S.C. 184 has been granted at this time, if the phrase "IF REQUIRED, FOREIGN FILING LICENSE GRANTED" DOES NOT appear on this form. Applicant may still petition for a license under 37 CFR 5.12, if a license is desired before the expiration of 6 months from the filing date of the application. If 6 months has lapsed from the filing date of this application and the licensee has not received any indication of a secrecy order under 35 U.S.C. 181, the licensee may foreign file the application pursuant to 37 CFR 5.15(b).

UNITED STATES PATENT AND TRADEMARK OFFICE

Commissioner for Patents
United States Patent and Trademark Office
P.O. Box 1450
Alexandria, VA 22313-1450
www.uspto.gov

FITZPATRICK CELLA HARPER & SCINTO
30 ROCKEFELLER PLAZA
NEW YORK NY 10112

COPY MAILED

SEP 0 2 2008

OFFICE OF PETITIONS

In re

Hasegawa, et al.
Application No. 10/647,287
Filed: August 26, 2003
Patent No. 7,368,866 B2
Issued: May 6, 2008
Attorney Docket No. 03500.017504

: DECISION REGARDING
: PATENT TERM ADJUSTMENT

This decision is in response to the "COMMENTS ON DETERMINATION OF PATENT TERM ADJUSTMENT", filed June 10, 2008, requesting correction of the patent term adjustment (PTA).

The request is **GRANTED**.

The patent term adjustment indicated on the patent is to be corrected by issuance of a certificate of correction showing a revised Patent Term Adjustment of **twenty-four (24) days**.

On May 6, 2008, the above-identified application matured into U.S. Patent No. 7,368,866 B2. The patent issued with a Patent Term Adjustment of one hundred forty-four (144) days.

However, as pointed out in the application for patent term adjustment, there was an error in the determination of the PTA. A review of the file reveals that applicants filed a "SECOND REQUEST FOR CONSIDERATION OF REFERENCES CITED IN FORM PTO 1449" on November 16, 2007, after the Office had mailed a Notice of Allowance on September 6, 2007. The Office mailed a response, a signed and dated copy of form PTO 1449, on March 31, 2008.

Accordingly, pursuant to 37 C.F.R. §1.704(c)(10), one hundred twenty (120) days of applicant delay should have been assessed.

In view thereof, the correct determination of patent term adjustment is **twenty-four (24) days** (158 days of PTO delay, reduced by 134 (14+120) days of applicant delay).

Accordingly, issuance of a certificate of correction pursuant to 35 U.S.C. 254 and 37 C.F.R. §1.322 is appropriate.

Give the basis for granting this decision, no fee is required and none has been charged. The Office thanks Patentees for their good faith and candor in bringing this matter to the attention of the Office.

The application file is being forwarded to the Certificates of Correction Branch for issuance of a certificate of correction in order to rectify the error regarding the patent term information. See 35 U.S.C. 254 and 37 C.F.R. §1.322. The certificate of correction will indicate that the term of the above-identified patent is extended or adjusted by **twenty-four (24) days**, subject to any disclaimers.

Telephone inquiries specific to this letter should be directed to Cliff Congo, Petitions Attorney, at (571)272-3207.

Nancy Johnson
Senior Legal Advisor
Office of Petitions

Enclosure: draft Certificate of Correction

UNITED STATES PATENT AND TRADEMARK OFFICE

DRAFT CERTIFICATE OF CORRECTION

PATENT : 7,368,866 B2

DATED : May 6, 2008

INVENTOR(S) : Hasegawa, et. al.

DRAFT

It is certified that error appears in the above-identified patent and that said Letters Patent is hereby corrected as shown below:

On the cover page,

[*] Notice: Subject to any disclaimer, the term of this patent is extended or adjusted under 35 USC 154(b) by (144) days

Delete the phrase "by 144 days" and insert – by 24 days—

UNITED STATES PATENT AND TRADEMARK OFFICE

Commissioner for Patents
United States Patent and Trademark Office
P.O. Box 1450
Alexandria, VA 22313-1450
www.uspto.gov

OBLON SPIVAK McCLELLAND
MAIER & NEUSTADT PC
1940 DUKE STREET
ALEXANDRIA, VA 22314

COPY MAILED

MAR 29 2006

OFFICE OF PETITIONS

In re Application of :
Hiroyuki Moro :
Application No. 10/647,291 : DECISION GRANTING PETITION
Filed: August 26, 2003 : UNDER 37 CFR 1.313(c)(2)
Attorney Docket No. 241856US2 :

This is a decision on the petition, filed March 20, 2006, under 37 CFR 1.313(c)(2) to withdraw the above-identified application from issue after payment of the issue fee.

The petition is **GRANTED**.

The above-identified application is withdrawn from issue for consideration of a submission under 37 CFR 1.114 (request for continued examination). See 37 CFR 1.313(c)(2).

Petitioner is advised that the issue fee paid on December 12, 2005 in the above-identified application cannot be refunded. If, however, the above-identified application is again allowed, petitioner may request that it be applied towards the issue fee required by the new Notice of Allowance.[1]

Telephone inquiries should be directed to the undersigned at (571) 272-3218.

This matter is being referred to Technology Center AU 2188 for processing of the request for continued examination under 37 CFR 1.114 and for consideration of the Information Disclosure Statement.

Frances Hicks
Petitions Examiner
Office of Petitions

C:\Documents and Settings\FHicks\My Documents\470\Mar9\647291.wpd

---

[1] *The request to apply the issue fee to the new Notice may be satisfied by completing and returning the new Part B – Fee(s) Transmittal Form (along with any balance due at the time of submission), which includes the following language thereon: "The Director of the USPTO is requested to apply the Issue Fee and Publication Fee (if any) or to re-apply any previously paid issue fee in the application identified above. Petitioner is advised that, whether a fee is indicated as being due or not, the Issue Fee Transmittal Form **must** be completed and timely submitted to avoid abandonment. Note the language in bold text on the first page of the Notice of Allowance and Fee(s) Due (PTOL-85).*

Approved
D.P.
4/21/2009
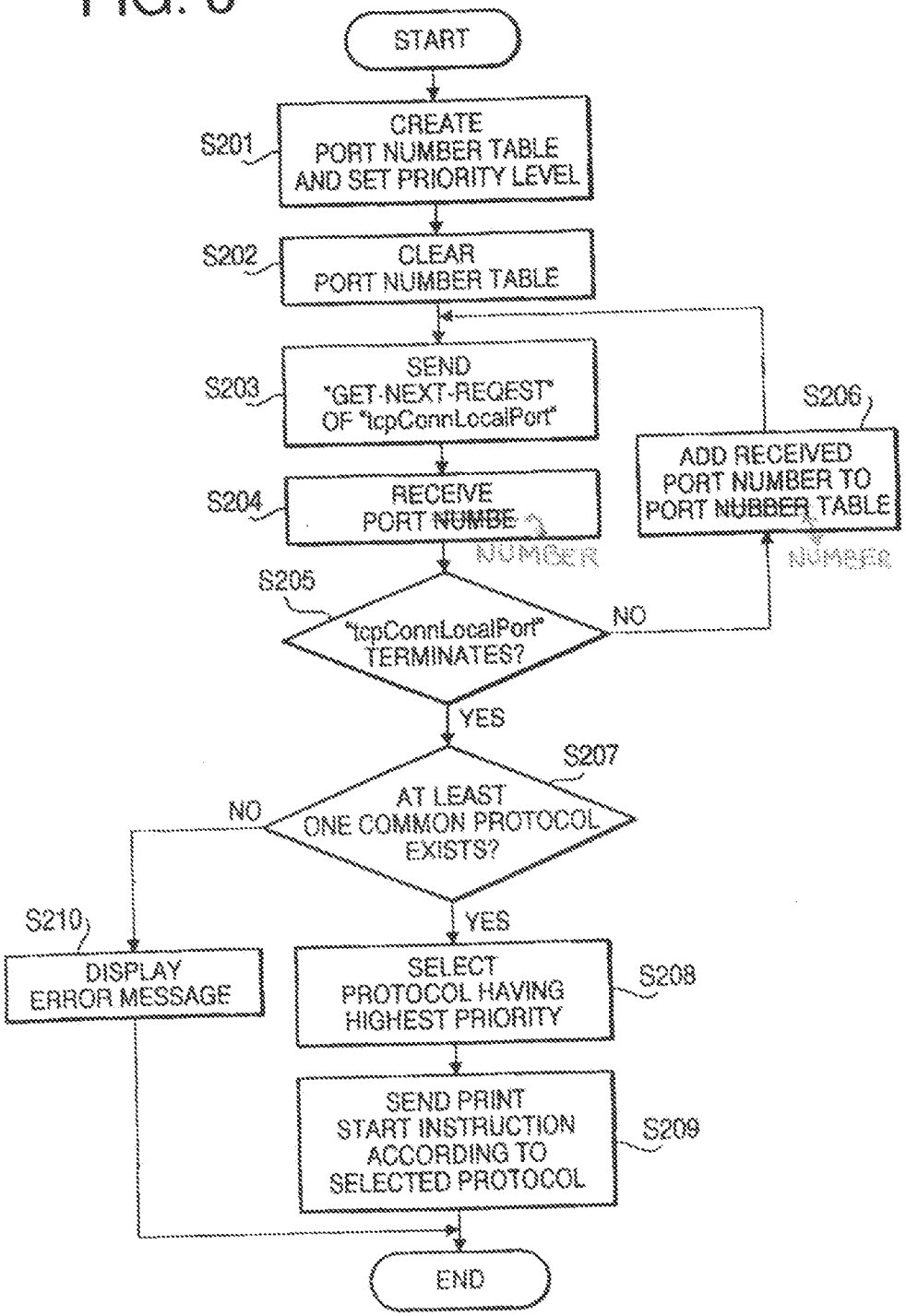
FIG. 6