UNITED STATES PATENT AND TRADEMARK OFFICE

COMMISSIONER FOR PATENTS
UNITED STATES PATENT AND TRADEMARK OFFICE
P.O. BOX 1450
ALEXANDRIA, VA 22313-1450
WWW.USPTO.GOV

Paper No. None

COPY MAILED
MAR 30 2006
OFFICE OF PETITIONS

PFIZER INC.
PATENT DEPARTMENT, MS8260-1611
EASTERN POINT ROAD
GROTON CT 06340

In re Application of Michael J. Munchhof et al. Application No. 10/667,183 Filed: September 17, 2003 Attorney Docket Number: PC25293A Title: NOVEL TRIAZOLE COMPOUNDS AS TRANSFORMING GROWTH FACTORS (TGF) INHIBITORS	DECISION ON PETITION UNDER 37 C.F.R. §1.137(b)

This is a decision on the petition, pursuant to 37 C.F.R. §1.137(b)[1], to revive the above-identified application, filed on January 9, 2006.

The above-identified application became abandoned for failure to submit the issue and publication fees in a timely manner in reply to the Notice of Allowance and Issue Fee Due, mailed September 13, 2005, which set a shortened statutory period for reply of three (3) months. No extensions of time are permitted

1 A grantable petition pursuant to 37 CFR 1.137(b) must be accompanied by:
(1) The reply required to the outstanding Office action or notice, unless previously filed;
(2) the petition fee as set forth in § 1.17(m);
(3) A statement that the entire delay in filing the required reply from the due date for the reply until the filing of a grantable petition pursuant to this paragraph was unintentional. The Commissioner may require additional information where there is a question whether the delay was unintentional, and;
(4) Any terminal disclaimer (and fee as set forth in § 1.20(d)) required pursuant to paragraph (d) of this section.

for transmitting issue fees or publication fees[2]. Accordingly, the above-identified application became abandoned on December 14, 2005.

With the present petition, Petitioner has submitted the petition fee, the publication fee, the issue fee, and the proper statement of unintentional delay.

As such, the petition is **GRANTED**.

The phone number for the Office of Patent Publication is (571) 272-4200. Telephone inquiries regarding *this decision* should be directed to the undersigned at (571) 272-3225.

Paul Shanoski
Senior Attorney
Office of Petitions
United States Patent and Trademark Office

2 See MPEP §710.02(e).

UNITED STATES PATENT AND TRADEMARK OFFICE

Commissioner for Patents
United States Patent and Trademark Office
P.O. Box 1450
Alexandria, VA 22313-1450
www.uspto.gov
OIW 02-05

CROMPTON CORPORATION
BENSON ROAD
MIDDLEBURY CT 06749

COPY MAILED

FEB 04 2005

OFFICE OF PETITIONS

In re Application of	:	
Denis Ghesquiere	:	
Application No. 10/667,190	:	ON PETITION
Filed: 17 September, 2003	:	
Attorney Docket No. 0201-PC	:	

This is a decision on the petition filed on 13 December, 2004, under 37 CFR 1.137(a)[1] to revive the above-identified application which is first treated as a petition to withdraw the holding of abandonment.

The petition is **dismissed**.

Any request for reconsideration of this decision must be submitted within **TWO (2) MONTHS** from the mail date of this decision. Extensions of time under 37 CFR 1.136(a) are permitted. The reconsideration request should include a cover letter entitled "Renewed Petition under 37 CFR 1.137(a)" or "Renewed Petition to withdraw the holding of abandonment," or as discussed below "Renewed Petition under 37 CFR 1.137(b)."

---

[1]A grantable petition under 37 CFR 1.137(a) must be accompanied by:

(1) the required reply, unless previously filed; In a nonprovisional application abandoned for failure to prosecute, the required reply may be met by the filing of a continuing application. In a nonprovisional utility or plant application filed on or after June 8, 1995, and abandoned for failure to prosecute, the required reply may also be met by the filing of a request for continued examination in compliance with § 1.114. In an application or patent, abandoned or lapsed for failure to pay the issue fee or any portion thereof, the required reply must be the payment of the issue fee or any outstanding balance thereof.

(2) the petition fee as set forth in 37 CFR 1.17(l);

(3) a showing to the satisfaction of the Commissioner that the entire delay in filing the required reply from the due date for the reply until the filing of a grantable petition pursuant to 37 CFR 1.137(a) was unavoidable; and

(4) any terminal disclaimer (and fee as set forth in 37 CFR 1.20(d)) required pursuant to 37 CFR 1.137(c)).

The application became abandoned on 18 February, 2004, for failure to timely file a response to the Notice to File Missing Parts of Nonprovisional Application mailed on 17 December, 2003, which set a two (2) month shortened period for reply. No extensions of the time for reply in accordance with 37 CFR 1.136(a) were obtained. Notice of Abandonment was mailed on 12 November, 2004.

Petitioner asserts that the Notice mailed on 17 December, 2003, was never received.

Petitioner has filed an executed oath or declaration and the late-filing surcharge with the present petition.

PETITION TO WITHDRAW THE HOLDING OF ABANDONMENT

Petitioner asserts that the Notice mailed on 17 December, 2003, was never received. A review of the record indicates no irregularity in the mailing of the Office action, and in the absence of any irregularity in the mailing, there is a strong presumption that the Office action was properly mailed to the address of record. This presumption may be overcome by a showing that the Office action was not in fact received. The showing required to establish the failure to receive an Office action must include a statement from the practitioner stating that the Office communication was not received by the practitioner and attesting to the fact that a search of the file jacket and docket records indicates that the Office communication was not received. A copy of the docket record where the non-received Office communication would have been entered had it been received and docketed must be attached to and referenced in practitioner's statement.[2] The showing outlined above may not be sufficient if there are circumstances that point to a conclusion that the Office communication may have been lost after receipt rather than a conclusion that the Office action was lost in the mail (e.g. if the practitioner has a history of not receiving Office actions).

The showing of record is insufficient to warrant withdrawal of the holding of abandonment. Petitioner has presented neither a statement from the practitioner attesting to the fact that a search of the file jacket and docket records indicates that the Office communication was not received nor a copy of the docket record where the non-received Office communication would have

[2] M.P.E.P. § 711.03(c); See Notice entitled "Withdrawing the Holding of Abandonment When Office Actions Are Not Received," 1156 O.G. 53 (November 16, 1993).

been entered had it been received and docketed attached to and referenced in petitioner's statement. As the required showing has not been presented, the petition must be dismissed.

PETITION UNDER 37 CFR 1.137(a)

The Commissioner may revive an abandoned application if the delay in responding to the relevant outstanding Office requirement is shown to the satisfaction of the Commissioner to be "unavoidable".[3] Decisions on reviving abandoned applications on the basis of "unavoidable" delay have adopted the reasonably prudent person standard in determining if the delay was unavoidable:

> The word 'unavoidable' . . . is applicable to ordinary human affairs, and requires no more or greater care or diligence than is generally used and observed by prudent and careful men in relation to their most important business. It permits them in the exercise of this care to rely upon the ordinary and trustworthy agencies of mail and telegraph, worthy and reliable employees, and such other means and instrumentalities as are usually employed in such important business. If unexpectedly, or through the unforeseen fault or imperfection of these agencies and instrumentalities, there occurs a failure, it may properly be said to be unavoidable, all other conditions of promptness in its rectification being present.[4]

The showing of record is inadequate to establish unavoidable delay within the meaning of 35 U.S.C. § 133 and 37 CFR 1.137(a).[5] Specifically, an application is "unavoidably" abandoned only where petitioner, or counsel for petitioner, takes all action necessary for a proper response to the outstanding Office action,

---

[3] 35 U.S.C. § 133.

[4] In re Mattullath, 38 App. D.C. 497, 514-15 (1912)(quoting Ex parte Pratt, 1887 Dec. Comm'r Pat. 31, 32-33 (1887)); see also Winkler v. Ladd, 221 F. Supp. 550, 552, 138 USPQ 666, 167-68 (D.D.C. 1963), aff'd, 143 USPQ 172 (D.C. Cir. 1963); Ex parte Henrich, 1913 Dec. Comm'r Pat. 139, 141 (1913). In addition, decisions on revival are made on a "case-by-case basis, taking all the facts and circumstances into account." Smith v. Mossinghoff, 671 F.2d 533, 538, 213 USPQ 977, 982 (D.C. Cir. 1982). Finally, a petition cannot be granted where a petitioner has failed to meet his or her burden of establishing that the delay was "unavoidable." Haines v. Quigg, 673 F. Supp. 314, 316-17, 5 USPQ2d 1130, 1131-32 (N.D. Ind. 1987).

[5] See MPEP 711(c)(III)(C)(2) for a discussion of the requirements for a showing of unavoidable delay.

but through the intervention of unforeseen circumstances, such as failure of mail, telegraph, facsimile, or the negligence of otherwise reliable employees, the response is not timely received in the Office.[6]

As the showing of record, petitioner's bald assertion that the Notice mailed on 17 December, 2003, was never received, in itself, is insufficient to satisfy the requirements of a grantable petition under 37 CFR 1.137(a), the petition will be dismissed.

ALTERNATIVE VENUE

Petitioner may wish to consider filing a renewed petition under 37 CFR 1.137(b), which now provides that where the delay in reply was unintentional, a petition may be filed to revive an abandoned application or a lapsed patent pursuant to 37 CFR 1.137(b). A grantable petition pursuant to 37 CFR 1.137(b) must be accompanied by:

(1) the required reply, unless previously filed. In a nonprovisional application abandoned for failure to prosecute, the required reply may be met by the filing of a continuing application. In a nonprovisional utility or plant application filed on or after 8 June, 1995, and abandoned for failure to prosecute, the required reply may also be met by the filing of a request for continued examination in compliance with § 1.114. In an application or patent, abandoned or lapsed for failure to pay the issue fee or any portion thereof, the required reply must be the payment of the issue fee or any outstanding balance thereof.

(2) the petition fee as set forth in 37 CFR 1.17(m);

(3) a statement that the entire delay in filing the required reply from the due date for the reply until the filing of a grantable petition pursuant to 37 CFR 1.137(b) was unintentional. The Commissioner may required additional information where there is a question whether the delay was unintentional; and

(4) any terminal disclaimer (and fee as set forth in 37 CFR 1.20(d)) required pursuant to 37 CFR 1.137(c)).

The filing of a petition under the unintentional standard cannot be intentionally delayed and therefore should be filed promptly. A person seeking revival due to unintentional delay cannot make a statement that the delay was unintentional unless the entire delay, including the delay from the date it was discovered that

---

[6] Ex parte Pratt, 1887 Dec. Comm'r Pat. 31 (Comm'r Pat. 1887).

the application was abandoned until the filing of the petition to revive under 37 CFR 1.137(b), was unintentional. A statement that the delay was unintentional is not appropriate if petitioner intentionally delayed the filing of a petition for revival under 37 CFR 1.137(b).

Should petitioner decide to file a petition under 37 CFR 1.137(b), the additional petition fee due would be $1,500.00 for other than a small entity.

A copy of the form for filing a petition under 37 CFR 1.137(b) to revive an application unintentionally abandoned is enclosed herewith for petitioner's convenience.

Further correspondence with respect to this matter should be addressed as follows:

By mail: Mail Stop Petition
Commissioner for Patents
P.O. Box 1450
Alexandria, VA 22313-1450

By FAX: (703)872-9306
Attn: Office of Petitions

By hand: Customer Service Window
Mail Stop Petition
Randolph Building
401 Dulany Street
Alexandria, VA 22314

Telephone inquiries concerning this matter may be directed to the undersigned at (571)272-3231.

DWood

Douglas I. Wood
Senior Petitions Attorney
Office of Petitions

Enclosure: Form PTO/SB/64
Privacy Act Statement

UNITED STATES PATENT AND TRADEMARK OFFICE

Commissioner for Patents
United States Patent and Trademark Office
P.O. Box 1450
Alexandria, VA 22313-1450
www.uspto.gov
DIW May-05

CROMPTON CORPORATION
BENSON ROAD
MIDDLEBURY CT 06749

COPY MAILED
MAY 0 3 2005
OFFICE OF PETITIONS

In re Application of	:	
Denis Ghesquiere	:	
Application No. 10/667,190	:	DECISION ON PETITION
Filed: 17 September, 2000	:	
Atty Docket No. 0201-PC	:	

This is a decision on the petition filed on 7 April, 2005, under 37 CFR 1.137(b)[1], to revive the above-identified application.

The petition is **GRANTED**.

The application became abandoned on 18 February, 2004, for failure to timely file a response to the Notice to File Missing Parts of Nonprovisional Application mailed on 17 December, 2003, which set a two (2) month shortened period for reply. No extensions of the time for reply in accordance with 37 CFR 1.136(a) were obtained. Notice of Abandonment was mailed on 12

[1]Effective December 1, 1997, the provisions of 37 CFR 1.137(b) now provide that where the delay in reply was unintentional, a petition may be filed to revive an abandoned application or a lapsed patent pursuant to 37 CFR 1.137(b). A grantable petition filed under the provisions of 37 CFR 1.137(b) must be accompanied by:

(1) the required reply, unless previously filed. In a nonprovisional application abandoned for failure to prosecute, the required reply may be met by the filing of a continuing application. In an application or patent, abandoned or lapsed for failure to pay the issue fee or any portion thereof, the required reply must be the payment of the issue fee or any outstanding balance thereof.

(2) the petition fee as set forth in 37 CFR 1.17(m);

(3) a statement that the entire delay in filing the required reply from the due date for the reply until the filing of a grantable petition pursuant to 37 CFR 1.137(b) was unintentional. The Commissioner may required additional information where there is a question whether the delay was unintentional; and

(4) any terminal disclaimer (and fee as set forth in 37 CFR 1.20(d)) required pursuant to 37 CFR 1.137(c)).

November, 2004. The petition under 37 CFR 1.137(a) filed on 13 December, 2004, was dismissed on 4 February, 2005.

This application is being referred to the Office of Initial Patent Examination for further processing.

Telephone inquiries concerning this matter may be directed to the undersigned at (571)272-3231.

DWood

Douglas I. Wood
Senior Petitions Attorney
Office of Petitions

UNITED STATES PATENT AND TRADEMARK OFFICE

UNITED STATES DEPARTMENT OF COMMERCE
United States Patent and Trademark Office
Address: COMMISSIONER FOR PATENTS
P.O. Box 1450
Alexandria, Virginia 22313-1450
www.uspto.gov

ALLEMAN HALL MCCOY RUSSELL & TUTTLE LLP
806 SW BROADWAY
SUITE 600
PORTLAND, OR 97205-3335

Mail Date: 04/21/2010

Applicant	: Herb Sorensen	: DECISION ON REQUEST FOR
Patent Number	: 7606728	: RECALCULATION of PATENT
Issue Date	: 10/20/2009	: TERM ADJUSTMENT IN VIEW
Appliction No	: 10/667,213	: OF WYETH AND NOTICE OF INTENT TO
Filed	: 09/19/2003	: ISSUE CERTIFICATE OF CORRECTION
		:

The Request for Recalculation is **GRANTED** to the extent indicated.

The patent term adjustment has been determined to be **1678** days. The USPTO will *sua sponte* issue a certificate of correction reflecting the amount of PTA days determined by the recalculation.

Prior to the issuance of the certificate of correction, the USPTO will afford patentee an opportunity to be heard and request reconsideration. Accordingly, patentee has **one month or thirty (30) days**, whichever is longer, to file a request for reconsideration of this patent term adjustment calculation. See 35 U.S.C. 154(b)(3)(B)(ii) and 37 CFR 1.322(a)(4). No extensions of time will be granted under 37 CFR 1.136.

Patentee should use document code PET.OP if electronically filing a request for reconsideration of this patent term adjustment calculation. The patentee must also include the information required by 37 CFR 1.705(b)(2) and the fee required by 37 CFR 1.18(e). If patentee does not file a timely request for reconsideration of this patent term adjustment calculation including the information required by 37 CFR 1.705(b)(2) and the fee required by 37 CFR 1.18(e), the USPTO will issue a certificate of correction reflecting the PTA determination noted above.

Patentee should be aware that in order to preserve the right to review in the United States District Court for the District of Columbia of the USPTO patent term adjustment determination, patentee must ensure that he or she also take the steps required under 35 U.S.C. 154(b)(4)(A) in a timely manner. Nothing in the request for recalculation should be construed as providing an alternative time frame for commencing a civil action under 35 U.S.C. 154(b)(4)(A).

Any questions concerning this decision should be directed to the Office of Patent Legal Administration at 571-272-7702.

UNITED STATES PATENT AND TRADEMARK OFFICE

COMMISSIONER FOR PATENTS
UNITED STATES PATENT AND TRADEMARK OFFICE
P.O. BOX 1450
ALEXANDRIA, VA 22313-1450
www.uspto.gov

JJGJR: 08-04

Paper No: __

FENWICK & WEST LLP
SILICON VALLEY CENTER
801 CALIFORNIA STREET
MOUNTAIN VIEW CA 94041

COPY MAILED
AUG 27 2004
OFFICE OF PETITIONS

In re Application of
Christiansen :
Application No. 10/667,241 : ON PETITION
Filed: 18 September, 2003 :
Attorney Docket No. 18602-08301 (P1547R1C1) :

This is in response to the petition under 37 C.F.R. §1.47(b), filed 12 May, 2004.[1]

The petition is **DISMISSED**.

NOTES:

(1) Any reply must include a renewed petition (and fee) must include a petition under 37

---

[1] The regulations at 37 C.F.R. 1.47 provide:

§ 1.47 Filing when an inventor refuses to sign or cannot be reached.

* * *

(b) Whenever all of the inventors refuse to execute an application for patent, or cannot be found or reached after diligent effort, a person to whom an inventor has assigned or agreed in writing to assign the invention, or who otherwise shows sufficient proprietary interest in the matter justifying such action, may make application for patent on behalf of and as agent for all the inventors. The oath or declaration in such an application must be accompanied by a petition including proof of the pertinent facts, a showing that such action is necessary to preserve the rights of the parties or to prevent irreparable damage, the fee set forth in §1.17(h), and the last known address of all of the inventors. An inventor may subsequently join in the application by filing an oath or declaration complying with §1.63.

(c) The Office will send notice of the filing of the application to all inventors who have not joined in the application at the address(es) provided in the petition under this section, and publish notice of the filing of the application in the *Official Gazette*. The Office may dispense with this notice provision in a continuation or divisional application, if notice regarding the filing of the prior application was given to the nonsigning inventor(s).

[47 Fed. Reg. 41275, Sept. 17, 1982, effective Oct. 1, 1982; 48 Fed. Reg. 2709, Jan. 20, 1983, effective Feb. 27, 1983; revised, 62 Fed. Reg. 53131, Oct. 10, 1997, effective Dec. 1, 1997; revised, 65 Fed. Reg. 54604, Sept. 8, 2000, effective Nov. 7, 2000]

BEST AVAILABLE COPY

C.F.R. §1.47 and must be submitted within two (2) months from the mail date of this decision. Extensions of time under 37 C.F.R. §1.136(a) are permitted. The reconsideration request should include a cover letter entitled "Petition under 37 C.F.R. §1.47";

(2) Thereafter, there will be no further reconsideration of this matter.

With regard to Petitioner's effort to satisfy the showing under the Rule with regard to the Examiner's requirement of 18 March, 2003, for a new oath/declaration by the now "non-signing" inventor and in response to the 7 November, 2003, Notice of Missing Parts (Filing Date Granted): Specifically, the record and the declarations/statements of facts of and document submission by Daniel R. Brownstone (Reg. No. 46,581) establish that:

- the Assignee Apple Computer, Inc., has a proprietary interest in the above-identified application with the assignment recorded at Reel/Frame No. 8106/0975;
- inventor Kevin M Christiansen (Mr. Christiansen) has been presented with the entire application (with amendment(s)) and has failed to sign the re-issue application consistent with the requirement of the Examiner; and
- .Petitioner has set forth in the petition the last known address of the non-signing inventor.

However, while Petitioner has submitted an oath/declaration, it is signed by Petitioner without a statement of the assignee or Petitioner that Petitioner is authorized to sign in compliance with 37 C.F.R. §1.63 and §1.64. (See: MPEP §409.03(b).)

ANALYSIS

The commentary at MPEP §409.03(b) states in pertinent part:

> (A) The 37 C.F.R. §1.47(b)applicant must make the oath required by 37 C.F.R. §1.63 and §1.64 or §1.175. Where a corporation is the 37 C.F.R. §1.47(b) applicant, an officer (President, Vice-President, Secretary, Treasurer, or Chief Executive Officer) thereof should normally sign the necessary oath or declaration. A corporation may authorize any person, including an attorney or agent registered to practice before the U.S. Patent and Trademark Office, to sign the application oath or declaration on its behalf. Where an oath or declaration is signed by a registered attorney or agent on behalf of a corporation, either proof of the attorney's or agent's authority in the form of a statement signed by an appropriate corporate officer must be submitted, or the attorney or agent may simply state that he

BEST AVAILABLE COPY

> or she is authorized to sign on behalf of the corporation. (Emphasis supplied.)

CONCLUSION

The materials submitted thus far do not clearly evidence Petitioner's authority to sign the oath or declaration on behalf of the assignee.

Petitioner must submit such a statement or an oath/declaration signed by the appropriate corporate officer of the assignee.

Therefore, the instant petition hereby is **dismissed**.

Further correspondence with respect to this matter should be addressed as follows:

By mail: (Effective 1 May, 2003)[2]
Commissioner for Patents
P.O. Box 1450
Alexandria, VA 22313-1450

By FAX: IFW Formal Filings
(703) 872-9306
(Effective 28 September, 2004: (571-273-0025)
ATTN.: Office of Petitions

By hand: Mail Stop: Petition
Customer Service Window
Lobby/Room 1B03
Crystal Plaza Two
220 20th Street S.
Arlington, VA 22202

[2] To determine the appropriate addresses for other subject-specific correspondence, refer to the USPTO Web site at www.uspto.gov.

BEST AVAILABLE COPY

Telephone inquiries regarding this decision should be directed to the undersigned at 703-305-9199.

John J. Gillon, Jr.
Senior Attorney
Office of Petitions

BEST AVAILABLE COPY

UNITED STATES PATENT AND TRADEMARK OFFICE

COMMISSIONER FOR PATENTS
UNITED STATES PATENT AND TRADEMARK OFFICE
P.O. BOX 1450
ALEXANDRIA, VA 22313-1450
www.uspto.gov

JJGJR.: 01-05

Paper No: __

FENWICK & WEST LLP
SILICON VALLEY CENTER
801 CALIFORNIA STREET
MOUNTAIN VIEW CA 94041

COPY MAILED

FEB 0 2 2005

OFFICE OF PETITIONS

In re Application of
Christiansen :
Application No. 10/667,241 : ON PETITION
Filed: 18 September, 2003 :
Attorney Docket No. 18602-08301 (P1547R1C1) :

This is in response to the renewed petition under 37 C.F.R. §1.47(b), filed 1 November, 2004.

The petition is **GRANTED**.

With regard to Petitioner's renewed effort to satisfy the showing under the Rule as to the Examiner's requirement of 18 March, 2003, for a new oath/declaration by the now "non-signing" inventor and in response to the 7 November, 2003, Notice of Missing Parts (Filing Date Granted):

Specifically, the record and the declarations/statements of facts of and document submission by Daniel R. Brownstone (Reg. No. 46,581) establish that:

- the Assignee Apple Computer, Inc., has a proprietary interest in the above-identified application with the assignment recorded at Reel/Frame No. 8106/0975;

- inventor Kevin M. Christiansen (Mr. Christiansen) has been presented with the entire application (with amendment(s)) and has failed to sign the re-issue application consistent with the requirement of the Examiner; and

- Petitioner has set forth in the petition the last known address of the non-signing inventor.

With the instant petition, Petitioner has submitted a signed oath/declaration with a statement of the assignee or Petitioner that Petitioner is authorized to sign in compliance with 37 C.F.R. §1.63 and §1.64. (See: MPEP §409.03(b).)

Lastly, Petitioner has submitted a declaration in compliance with 37 C.F.R. §1.63 and §1.64 and Petitioner has shown that such action is necessary to prevent irreparable damage.

This application and papers have been reviewed and found in compliance with 37 C.F.R. §1.47(b).

This application hereby is **ACCORDED status under 37 C.F.R. §1.47(b)**.

As provided under 37 C.F.R. §1.47(b), the Office will forward notice of this application's filing to the non-signing inventor at the address given in the petition.

Notice of the filing of this application also will be published in the Official Gazette.

This file is being released to OIPE for processing as necessary to reflect the instant decision before being released for examination in due course.

Telephone inquiries concerning this decision may be directed to the undersigned at (571) 272-3214.

John J. Gillon, Jr.
Senior Attorney
Office of Petitions

UNITED STATES PATENT AND TRADEMARK OFFICE

COMMISSIONER FOR PATENTS
UNITED STATES PATENT AND TRADEMARK OFFICE
P.O. BOX 1450
ALEXANDRIA, VA 22313-1450
www.uspto.gov

JJGJR.: 01-05

Paper No: __

KEVIN M. CHRISTIANSEN
20691 CARNIEL AVENUE
SARATOGA, CA 95070

COPY MAILED

FEB 02 2005

OFFICE OF PETITIONS

In re Application of
Christiansen :
Application No. 10/667,241 : COMMUNICATION
Filed: 18 September, 2003 :
Attorney Docket No. 18602-08301 (P1547R1C1) :

Dear Kevin M. Christiansen:

You are named as inventor in the above identified United States patent application, filed under the provisions of 35 U.S.C. §116 (United States Code), and 37 C.F.R. §1.47,[1] ¶b, Rules of Practice in Patent Cases. Should a patent be granted on the application you will be designated therein as inventor.

---

[1] The regulations at 37 C.F.R. §1.47 provide:

§ 1.47 Filing when an inventor refuses to sign or cannot be reached.

(a) If a joint inventor refuses to join in an application for patent or cannot be found or reached after diligent effort, the application may be made by the other inventor on behalf of himself or herself and the nonsigning inventor. The oath or declaration in such an application must be accompanied by a petition including proof of the pertinent facts, the fee set forth in §1.17(h), and the last known address of the nonsigning inventor. The nonsigning inventor may subsequently join in the application by filing an oath or declaration complying with §1.63.

(b) Whenever all of the inventors refuse to execute an application for patent, or cannot be found or reached after diligent effort, a person to whom an inventor has assigned or agreed in writing to assign the invention, or who otherwise shows sufficient proprietary interest in the matter justifying such action, may make application for patent on behalf of and as agent for all the inventors. The oath or declaration in such an application must be accompanied by a petition including proof of the pertinent facts, a showing that such action is necessary to preserve the rights of the parties or to prevent irreparable damage, the fee set forth in §1.17(h), and the last known address of all of the inventors. An inventor may subsequently join in the application by filing an oath or declaration complying with §1.63.

© The Office will send notice of the filing of the application to all inventors who have not joined in the application at the address(es) provided in the petition under this section, and publish notice of the filing of the application in the *Official Gazette*. The Office may dispense with this notice provision in a continuation or divisional application, if notice regarding the filing of the prior application was given to the nonsigning inventor(s).

[47 Fed. Reg. 41275, Sept. 17, 1982, effective Oct. 1, 1982; 48 Fed. Reg. 2709, Jan. 20, 1983, effective Feb. 27, 1983; revised, 62 Fed. Reg. 53131, Oct. 10, 1997, effective Dec. 1, 1997; revised, 65 Fed. Reg. 54604, Sept. 8, 2000, effective Nov. 7, 2000]

As a named inventor you are entitled to inspect any paper in the file wrapper of the application, order copies of all or any part thereof (at a prepaid cost per 37 C.F.R. §1.19) or make your position of record in the application. Alternatively, you may arrange to do any of the preceding through a registered patent attorney or agent presenting written authorization from you. If you care to join the application, counsel of record (see below) would presumably assist you. Joining in the application would entail the filing of an appropriate oath or declaration by you pursuant to 37 C.F.R. §1.63.

Requests for information regarding your application should be directed to the File Information Unit at (703) 308-2733.

Information regarding how to pay for and order a copy of the application, or a specific paper in the application, should be directed to Certification Division at (703) 308-9726 or toll-free: (800) 972-6382 (outside the Washington D.C. area).

Telephone inquiries concerning this letter may be directed to the undersigned at (571) 272-3214.

John J. Gillon, Jr.
Senior Attorney
Office of Petitions

Counsel of Record:
FENWICK & WEST LLP
SILICON VALLEY CENTER
801 CALIFORNIA STREET
MOUNTAIN VIEW CA 94041

UNITED STATES PATENT AND TRADEMARK OFFICE

Commissioner for Patents
United States Patent and Trademark Office
P.O. Box 1450
Alexandria, VA 22313-1450
www.uspto.gov

Paper No.

PATTI, HEWITT & AREZINA LLC
ONE NORTH LASALLE STREET
44TH FLOOR
CHICAGO IL 60602

MAILED

MAR 16 2009

OFFICE OF PETITIONS

In re Application of :
Magyar et al. :
Application No. 10/667,257 : ON PETITION
Filed: September 19, 2003 :
Atty Docket No. 920047-94539 :

This is in response to the "PETITION TO WITHDRAW THE HOLDING OF AN ABANDONMENT" filed August 26, 2008 (and resubmitted September 10, 2008).

The above-identified application became abandoned for failure to pay the Issue Fee and Publication Fee within three months of the mailing date, April 3, 2008, of the Notice of Allowance and Fee(s) Due. This Office action set a three-month nonextendable statutory period for reply. The issue fee and publication fee were received but determined to not be sufficient. No further payment received, the above-identified application became abandoned effective July 4, 2008. A courtesy Notice of Abandonment was mailed on August 1, 2008.

In response, applicant promptly filed the instant petition. Applicant acknowledges that the Issue Fee Transmittal, submitting the issue fee and publication fee, inadvertently checked "Box 4b, which states Applicant is no longer claiming SMALL ENTITY status." Moreover, the Credit Card form mailed along with the Issue Fee Transmittal incorrectly stated the amount of "1,700.00." Applicant states that the correct amount should have been $1,020.00.

Applicant's arguments have been considered, but not found persuasive to withdraw the holding of abandonment. At the time of payment of the issue fee, applicant is required to make a determination of continued entitlement to small entity status. By checking "Box 4b", applicant asserted a loss of entitlement to small entity status. As such, the payment of the issue fee and publication fee in less than the amount for a large entity was determined to be insufficient. Consequently, the application was properly deemed abandoned. Under these circumstances, withdrawal of the holding of abandonment is not warranted.

The petition under § 1.181 is **DISMISSED**.

Any request for reconsideration must be submitted within **TWO (2) MONTHS** from the mail date of this decision. Extensions of time under 37 C.F.R. §1.136(a) are not permitted. See 1.181(f).

Alternatively, applicant may seek revival under the provisions of 37 CFR 1.137(b). A grantable petition pursuant to 37 CFR 1.137(b) must be accompanied by:

(1) The reply required to the outstanding Office action or notice, unless previously filed;
(2) The petition fee as set forth in § 1.17(m);
(3) A statement that the entire delay in filing the required reply from the due date for the reply until the filing of a grantable petition pursuant to this paragraph was unintentional. The Director may require additional information where there is a question whether the delay was unintentional; and
(4) Any terminal disclaimer (and fee as set forth in § 1.20(d)) required pursuant to paragraph (d) of this section.

Further correspondence with respect to this decision should be addressed as follows:

By mail: Mail Stop Petition
Commissioner for Patents
P.O. Box 1450
Alexandria, VA 22313-1450

By fax: (571) 273-8300
ATTN: Office of Petitions

By hand: Customer Service Window
Randolph Building
401 Dulany Street
Alexandria, VA 22314

Telephone inquiries concerning this decision should be directed to the undersigned at (571) 272-3219.

Nancy Johnson
Senior Petitions Attorney
Office of Petitions

UNITED STATES PATENT AND TRADEMARK OFFICE

Commissioner for Patents
United States Patent and Trademark Office
P.O. Box 1450
Alexandria, VA 22313-1450
www.uspto.gov

Paper No.

PATTI, HEWITT & AREZINA LLC
ONE NORTH LASALLE STREET
44TH FLOOR
CHICAGO IL 60602

COPY MAILED

JUN 05 2009

OFFICE OF PETITIONS

In re Application of	:	
Magyar et al.	:	
Application No. 10/667,257	:	ON PETITION
Filed: September 19, 2003	:	
Atty Docket No. 920047-94539	:	

This is in response to the "PETITION FOR REVIVAL OF AN APPLICATION FOR PATENT ABANDONED UNINTENTIONALLY UNDER 37 CFR §1.137(B)" filed May 12, 2009.

The above-identified application became abandoned effective July 4, 2008 for failure to pay the Issue Fee and Publication Fee within three months of the mailing date, April 3, 2008, of the Notice of Allowance and Fee(s) Due. The issue fee and publication fee were received but determined to not be sufficient. By decision mailed March 16, 2009, a prior "PETITION TO WITHDRAW THE HOLDING OF AN ABANDONMENT" filed August 26, 2008 (and resubmitted September 10, 2008) was dismissed.

The petition under § 1.137(b) is **GRANTED**.

The petition includes the required reply[1] in the form of payment of the deficiency in payment of the Issue Fee ($113); payment of the petition fee set forth in 37 CFR § 1.17(m); and the required statement of unintentional delay. No terminal disclaimer is required.

[1] The publication fee was previously paid. There was no distinct but concurrent requirement for new drawings.

It is noted that the petition includes a general authorization to charge any required fees to a Credit Card. Such is improper. See 37 CFR 1.23(b). Fortunately, reliance on this authorization was not necessary to a favorable decision.

It is concluded that all requirements of 37 CFR 1.137(b) have been met.

The Office of Data Management (formerly known as the Office of Patent Publication) has been advised of this decision. The application is, thereby, forwarded for processing into a patent.

Telephone inquiries concerning this decision should be directed to the undersigned at (571) 272-3219.

Nancy Johnson
Senior Petitions Attorney
Office of Petitions

UNITED STATES PATENT AND TRADEMARK OFFICE

UNITED STATES DEPARTMENT OF COMMERCE
United States Patent and Trademark Office
Address: COMMISSIONER FOR PATENTS
P.O. Box 1450
Alexandria, Virginia 22313-1450
www.uspto.gov

HANLEY, FLIGHT & ZIMMERMAN, LLC
150 S. WACKER DRIVE
SUITE 2100
CHICAGO, IL 60606

Mail Date: 04/20/2010

Applicant	: Jason Dondlinger	: DECISION ON REQUEST FOR
Patent Number	: 7578097	: RECALCULATION of PATENT
Issue Date	: 08/25/2009	: TERM ADJUSTMENT IN VIEW
Appliction No	: 10/667,259	: OF WYETH AND NOTICE OF INTENT TO
Filed	: 09/19/2003	: ISSUE CERTIFICATE OF CORRECTION
		:

The Request for Recalculation is **GRANTED** to the extent indicated.

The patent term adjustment has been determined to be **110** days. The USPTO will *sua sponte* issue a certificate of correction reflecting the amount of PTA days determined by the recalculation.

Prior to the issuance of the certificate of correction, the USPTO will afford patentee an opportunity to be heard and request reconsideration. Accordingly, patentee has **one month or thirty (30) days**, whichever is longer, to file a request for reconsideration of this patent term adjustment calculation. See 35 U.S.C. 154(b)(3)(B)(ii) and 37 CFR 1.322(a)(4). No extensions of time will be granted under 37 CFR 1.136.

Patentee should use document code PET.OP if electronically filing a request for reconsideration of this patent term adjustment calculation. The patentee must also include the information required by 37 CFR 1.705(b)(2) and the fee required by 37 CFR 1.18(e). If patentee does not file a timely request for reconsideration of this patent term adjustment calculation including the information required by 37 CFR 1.705(b)(2) and the fee required by 37 CFR 1.18(e), the USPTO will issue a certificate of correction reflecting the PTA determination noted above.

Patentee should be aware that in order to preserve the right to review in the United States District Court for the District of Columbia of the USPTO patent term adjustment determination, patentee must ensure that he or she also take the steps required under 35 U.S.C. 154(b)(4)(A) in a timely manner. Nothing in the request for recalculation should be construed as providing an alternative time frame for commencing a civil action under 35 U.S.C. 154(b)(4)(A).

Any questions concerning this decision should be directed to the Office of Patent Legal Administration at 571-272-7702.

UNITED STATES PATENT AND TRADEMARK OFFICE

Commissioner for Patents
United States Patent and Trademark Office
P.O. Box 1450
Alexandria, VA 22313-1450
www.uspto.gov

SIEMENS CORPORATION
INTELLECTUAL PROPERTY DEPARTMENT
170 WOOD AVENUE SOUTH
ISELIN NJ 08830

COPY MAILED

FEB 14 2006

OFFICE OF PETITIONS

In re Application of	:	
Samer P. Wasif et al	:	
Application No. 10/667,263	:	ON PETITION
Filed: September 19, 2003	:	
Attorney Docket No. 2002P20734US01	:	

This is a decision on the petition, filed February 10, 2006, and supplemented on February 13, 2006, under 37 CFR 1.313(c)(2) to withdraw the above-identified application from issue after payment of the issue fee.

The petition is **GRANTED.**

The above-identified application is withdrawn from issue for consideration of a submission under 37 CFR 1.114 (request for continued examination). See 37 CFR 1.313(c)(2).

Petitioner is advised that the issue fee paid on December 2, 2005, in the above-identified application cannot be refunded. If, however, the above-identified application is again allowed, petitioner may request that it be applied towards the issue fee required by the new Notice of Allowance.[1]

Telephone inquiries should be directed to the undersigned at (571) 272-3208.

The examiner of Technology Center AU 3746 will consider the request for continued examination under 37 CFR 1.114.

Karen Creasy

Karen Creasy
Petitions Examiner
Office of Petitions
Office of the Deputy Commissioner
for Patent Examination Policy

---

[1] The request to apply the issue fee to the new Notice may be satisfied by completing and returning the new Issue Fee Transmittal Form PTOL-85(b), which includes the following language thereon: "Commissioner for Patents is requested to apply the Issue Fee and Publication Fee (if any) or re-apply any previously paid issue fee to the application identified above." Petitioner is advised that, whether a fee is indicated as being due or not, the Issue Fee Transmittal Form **must** be completed and timely submitted to avoid abandonment. Note the language in bold text on the first page of the Notice of Allowance and Fee(s) Due (PTOL-85).

UNITED STATES PATENT AND TRADEMARK OFFICE

COMMISSIONER FOR PATENTS
UNITED STATES PATENT AND TRADEMARK OFFICE
P.O. BOX 1450
ALEXANDRIA, VA 22313-1450
WWW.USPTO.GOV

Paper No. None

CANTOR COLBURN, LLP
55 GRIFFIN ROAD SOUTH
BLOOMFIELD CT 06002

COPY MAILED

MAY 24 2006

OFFICE OF PETITIONS

In re Application of	:	
Thomas J. Hartle et al.	:	
Application No. 10/667,265	:	DECISION ON PETITION
Filed: September 19, 2003	:	UNDER 37 C.F.R. §1.181
Attorney Docket No.: 125855-2	:	
Title: UNDERHOOD COMPONENTS	:	

This is a decision on the petition filed December 22, 2004, pursuant to 37 C.F.R. §1.181, requesting that the holding of abandonment in the above-identified application be withdrawn.

The Office regrets the period of delay in issuing this decision.

The above-identified application became abandoned for failure to reply in a timely manner to the non-final Office action, mailed April 15, 2004, which set a shortened statutory period for reply of three (3) months. No response was received, and no extensions of time under the provisions of 37 C.F.R. §1.136(a) were requested. Accordingly, the above-identified application became abandoned on July 16, 2004. A notice of abandonment was mailed on November 29, 2004.

With the present petition, Petitioner has alleged that the mailing was not received. The showing required to establish nonreceipt of an Office communication must include a statement from the practitioner stating that the Office communication was not received by the practitioner and attesting to the fact that a search of the file jacket and docket records indicates that the Office communication was not received. In addition, a copy of the docket record where the non-received Office communication would have been entered had it been received and docketed must be attached to and referenced in practitioner's statement[1].

1 See MPEP 711.03(c).

Petitioner has met the requirements of Delgar v. Schuyler, 172 USPQ 513 (D.D.C. 1971), in that he has asserted that he has searched both the file jacket and the docket record, and he has included a copy of the latter.

Considering the facts and circumstances of the delay at issue, as set forth on petition, it is concluded that Petitioner has met his burden of establishing that the mailing was not received.

Accordingly, the petition under 37 C.F.R. §1.181(a) is **GRANTED**. The holding of abandonment is **WITHDRAWN**.

The Technology Center will be advised of this decision. The Technology Center's technical support staff will re-mail the non-final Office action. The three-month extendable time period for responding to the Office action will be set to run from the mailing date of the re-mailed Office action.

Telephone inquiries regarding this decision should be directed to the undersigned at (571) 272-3225. All other inquiries concerning examination procedures or status of the application should be directed to the Technology Center.

Paul Shanoski

Paul Shanoski
Senior Attorney
Office of Petitions
United States Patent and Trademark Office

UNITED STATES PATENT AND TRADEMARK OFFICE

Commissioner for Patents
United States Patent and Trademark Office
P.O. Box 1450
Alexandria, VA 22313-1450
www.uspto.gov

SIEMENS CORPORATION
INTELLECTUAL PROPERTY DEPT.
170 WOOD AVENUE SOUTH
ISELIN, NJ 08830

COPY MAILED

JUL 27 2005

OFFICE OF PETITIONS

In re Application of	:
Thomas Berndt et al	:
Application No. 10/667,266	: DECISION ON PETITION
Filed: September 19, 2003	: UNDER 37 CFR 1.78(a)(3)
Attorney Docket No. 2002P02639WOUS	:

This is a decision on the petition filed May 16, 2005, which is being treated under 37 CFR 1.78(a)(3), to accept an unintentionally delayed claim under 35 U.S.C. §§ 120 and 365(c) for the benefit of priority to prior-filed PCT Application No. PCT/EP03/02977, filed March 21, 2003, set forth in the amendment submitted concurrently with the instant petition.

The petition is **GRANTED**.

A petition for acceptance of a claim for late priority under 37 CFR 1.78(a)(3) is only applicable to those applications filed on or after November 29, 2000. Further, the petition is appropriate only after the expiration of the period specified in 37 CFR 1.78(a)(2)(ii). In addition, the petition under 37 CFR 1.78(a)(3) must be accompanied by:

(1) the reference required by 35 U.S.C. § 120 and 37 CFR 1.78(a)(2)(i) of the prior-filed application, unless previously submitted;
(2) the surcharge set forth in § 1.17(t); and
(3) a statement that the entire delay between the date the claim was due under 37 CFR 1.78(a)(2)(ii) and the date the claim was filed was unintentional. The Commissioner may require additional information where there is a question whether the delay was unintentional.

The instant nonprovisional application was filed after November 29, 2000, and the claim herein for the benefit of priority to the above-noted, prior-filed PCT application is submitted after expiration of the period specified in 37 CFR 1.78(a)(2)(ii). Therefore, this is a proper petition under 37 CFR 1.78(a)(3).

The petition complies with the requirements for a grantable petition under 37 CFR 1.78(a)(3) in that (1) a reference to the above-noted, prior-filed PCT application has been included in an amendment to the first sentence of the specification following the title, as provided by 37 CFR

1.78(a)(2)(iii); (2) the surcharge fee required by 37 CFR 1.17(t) has been previously submitted; and (3) the petition contains a proper statement of unintentional delay. Accordingly, having found that the instant petition for acceptance of an unintentionally delayed claim for the benefit of priority under 35 U.S.C. §§ 120 and 365(c) to the above-noted, prior-filed PCT application satisfies the conditions of 37 CFR 1.78(a)(3), the petition is granted.

The granting of the petition to accept the delayed benefit claim to the prior-filed application under 37 CFR 1.78(a)(3) should not be construed as meaning that the instant application is entitled to the benefit of the prior-filed application. In order for the instant application to be entitled to the benefit of the prior-filed application, all other requirements under 35 U.S.C. §§ 120 and 365(c) and 37 CFR 1.78(a)(1) and (a)(2) must be met. Similarly, the fact that the corrected Filing Receipt accompanying this decision on petition includes the prior-filed application should not be construed as meaning that applicant is entitled to the claim for benefit of priority to the prior-filed application noted thereon. Accordingly, the examiner will, in due course, consider this benefit claim and determine whether the instant application is entitled to the benefit of the earlier filing date.

A corrected Filing Receipt, which includes the priority claim to the prior-filed application, accompanies this decision on petition.

Any inquiries concerning this decision may be directed to Wan Laymon at (571) 272-3220. All other inquiries concerning either the examination procedures or status of the application should be directed to the Technology Center.

This application is being forwarded to the examiner of Technology Center Art Unit 1762 for appropriate action on the amendment filed May 16, 2005, including consideration of applicant's entitlement to claim benefit of priority under 35 U.S.C. §§ 120 and 365(c) to the above-noted, prior-filed PCT application.

Frances Hicks

Frances Hicks
Lead Petitions Examiner
Office of Petitions
Office of the Deputy Commissioner
for Patent Examination Policy

ATTACHMENT Corrected Filing Receipt

UNITED STATES PATENT AND TRADEMARK OFFICE

Commissioner for Patents
United States Patent and Trademark Office
P.O. Box 1450
Alexandria, VA 22313-1450
www.uspto.gov

MAR 27 2007

Paper No. 03/27/07

James W. Hiney, Esq.
P. O. Box 818
Middleburg, VA 23060

In re Application of: James Williams Serial No.: 10/667277 Filed: September 19, 2003	PETITION FOR CORRECTION OF INVENTORSHIP UNDER 37 CFR § 1.48(a)

This is a decision on the petition filed December 21, 2006 to correct inventorship under 37 CFR 1.48 (a).

The petition is GRANTED.

In view of the papers filed December 21, 2006 it has been found that this nonprovisional application, as filed, through error and without deceptive intent, improperly set forth the inventorship, and accordingly, this application has been corrected in compliance with 37 CFR 1.48 (a). The inventorship of this application has been changed by deleting the name: C. Christopher Klepper

The application will be forwarded to the Office of Initial Patent Examination (OIPE) for issuance of a corrected filing receipt, and correction of Office records to reflect the inventorship as corrected.

Zandra V. Smith
Supervisory Patent Examiner,
Art Unit 2822

UNITED STATES PATENT AND TRADEMARK OFFICE

Commissioner for Patents
United States Patent and Trademark Office
P.O. Box 1450
Alexandria, VA 22313-1450
www.uspto.gov

VERIZON
PATENT MANAGEMENT GROUP
1515 N. COURTHOUSE ROAD
SUITE 500
ARLINGTON VA 22201-2909

COPY MAILED

JUL 15 2008

OFFICE OF PETITIONS

In re Application of	:	
David E. McDysan	:	
Application No. 10/667,278	:	DECISION GRANTING PETITION
Filed: September 22, 2003	:	UNDER 37 CFR 1.313(c)(2)
Attorney Docket No. RIC01060N	:	

This is a decision on the petition under 37 CFR 1.313(c)(2), filed July 9, 2008, to withdraw the above-identified application from issue after payment of the issue fee.

The petition is **GRANTED**.

The above-identified application is withdrawn from issue for consideration of a submission under 37 CFR 1.114 (request for continued examination). *See* 37 CFR 1.313(c)(2).

Petitioner is advised that the issue fee paid on June 23, 2008 cannot be refunded. If, however, this application is again allowed, petitioner may request that it be applied towards the issue fee required by the new Notice of Allowance.[1]

Telephone inquiries should be directed to Terri Williams at (571) 272-2991.

This application is being referred to Technology Center AU 2155 for processing of the request for continued examination under 37 CFR 1.114 and for consideration of the concurrently filed information disclosure statement.

Terri Williams
Petitions Examiner
Office of Petitions

---

[1] *The request to apply the issue fee to the new Notice may be satisfied by completing and returning the new Part B – Fee(s) Transmittal Form (along with any balance due at the time of submission). Petitioner is advised that the Issue Fee Transmittal Form* ***must*** *be completed and timely submitted to avoid abandonment of the application.*

UNITED STATES PATENT AND TRADEMARK OFFICE

Commissioner for Patents
United States Patent and Trademark Office
P.O. Box 1450
Alexandria, VA 22313-1450
www.uspto.gov

GENERAL ELECTRIC CO.
GLOBAL PATENT OPERATION
187 DANBURY ROAD
SUITE 204
WILTON CT 06897-4122

COPY MAILED

MAR 0 5 2008

OFFICE OF PETITIONS

In re Application of	:	
Boman, et al.	:	
Application No. 10/667,282	:	DECISION ON PETITION
Filed: 17 September, 2003	:	
Attorney Docket No. 185740	:	

This is a decision on the petition under 37 CFR 1.78(a)(6), filed 21 March, 2006, to accept an unintentionally delayed claim under 35 U.S.C. §119(e) for the benefit of the prior-filed provisional application set forth in the concurrently filed amendment.

The petition is directed to a moot issue and is hence **DISMISSED** in view of the request filed 22 May, 2006, withdrawing the petition under 37 CFR 1.78(a)(6). Petitioner's fee has being refunded to Deposit Account 10-0447. Should Petitioner later find that a petition fee was not refunded, Petitioner should request a refund from the Office of Finance and enclose therewith a copy of this decision.

Any inquiries concerning this decision may be directed to John Gillon at (571) 272-3214. All other inquiries concerning either the examination procedures or status of the application should be directed to the Technology Center.

The application is being forwarded to Technology Center AU 2612 for consideration by the examiner of the claim under 35 U.S.C. §119(e) for the benefit of priority to the prior-filed provisional application.

Anthony Knight
Supervisor
Office of Petitions

IFW/DAC

OIPE IAP78
MAR 21 2006
PATENT & TRADEMARK OFFICE

I hereby certify that this paper (along with any paper referred to as being attached or enclosed) is being deposited with the U.S. Postal Service on the date shown below with sufficient postage as First Class Mail, in an envelope addressed to: MS Petition, Commissioner for Patents, P.O. Box 1450, Alexandria, VA 22313-1450.

Dated: March 17, 2006 Signature: (Rebecca Butler-Gulnan)

Docket No.: 62929-00002USPT
(PATENT)

IN THE UNITED STATES PATENT AND TRADEMARK OFFICE

In re Patent Application of:
Hans Boman et al.

Application No.: 10/667282 Confirmation No.: 8635

Filed: September 17, 2003 Art Unit: 2131

For: METHOD AND SYSTEM FOR MONITORING CONTAINERS TO MAINTAIN THE SECURITY THEREOF Examiner: Not Yet Assigned

PETITION TO ACCEPT UNINTENTIONALLY-DELAYED PRIORITY CLAIM

MS Petition
Commissioner for Patents
P.O. Box 1450
Alexandria, VA 22313-1450

Dear Sir:

Pursuant to 35 USC § 119 and 37 CFR § 1.78(a)(4) and 1.78(a)(5), Applicants petition the Commissioner to consider Applicants' unintentionally-delayed priority claim under 35 USC § 119. The reference required by 35 USC § 119 and 37 CFR § 1.78(a)(4) is set forth in the concurrently-filed amendment.

03/04/2008 CKHLOK 00000004 10667282
01 FC:1999 130.00 OP

As required by 37 CFR § 1.78(a)(6)(iii), Applicants hereby assert that the entire delay between the date the priority claim was due under 37 CFR § 1.78(a)(5)(ii) and the date the priority claim is being filed was unintentional. In accordance with 37 CFR § 1.78(a)(6)(ii) and 37 CFR § 1.17(t), a check in the amount of $130.00 is attached to this Petition to cover the cost of the surcharged required by 37 CFR § 1.17(t). In light of the above, Applicants respectfully request the Commissioner to consider and grant this petition.

Should there be any additional fees, the Commissioner is hereby authorized to charge such fees as may be required by this paper to Deposit Account Number 10-0447. If there is an excess, please credit the same to Deposit Account No. 10-0447.

DALLAS2 1149079v1 62929-00002

Adjustment date: 03/04/2008 CKHLOK
03/22/2006 TBESHAH1 00000013 100447 10667282
01 FC:1454 1240.00 CR -130.00 OP

03/22/2006 TBESHAH1 00000013 100447 10667282
01 FC:1454 1240.00 DA 130.00 OP

Dated: March 17, 2006

Respectfully submitted,

By _____

Ross T. Robinson
Registration No.: 47,031
JENKENS & GILCHRIST, A PROFESSIONAL CORPORATION
1445 Ross Avenue, Suite 3700
Dallas, Texas 75202
(214) 855-4500
Attorneys For Applicant

UNITED STATES PATENT & TRADEMARK OFFICE
Washington, D.C. 20231

REQUEST FOR PATENT FEE REFUND

1 Date of Request: _____ 2 Serial/Patent # 10/667,282

	3 Please refund the following fee(s):	4 PAPER NUMBER	5 DATE FILED	6 AMOUNT
	Filing			$
	Amendment			$
	Extension of Time			$
	Notice of Appeal/Appeal			$
X	Petition		03/21/06	$ 1,240.00
	Issue			$
	Cert of Correction/Terminal Disc.			$
	Maintenance			$
	Assignment			$
	Other			$

7 TOTAL AMOUNT OF REFUND $ 1,240.00

8 TO BE REFUNDED BY:

	Treasury Check
	Credit Deposit A/C #:

9 1 0 -- 0 4 4 7

10 REASON:

	Overpayment
	Duplicate Payment
X	No Fee Due (Explanation):

Petition withdrawn

11 REFUND REQUESTED BY:

TYPED/PRINTED NAME: gillon TITLE: atty

SIGNATURE: /John Gillon/ PHONE: 23214

OFFICE: OP

****

THIS SPACE RESERVED FOR FINANCE USE ONLY:

APPROVED: [illegible] DATE: 3/4/08

Instructions for completion of this form appear on the back. After completion, attach white and yellow copies to the official file and mail or hand-carry to:

Office of Finance
Refund Branch
Crystal Park One, Room 802B

FORM PTO 1577
(01/90)

UNITED STATES PATENT AND TRADEMARK OFFICE

COMMISSIONER FOR PATENTS
UNITED STATES PATENT AND TRADEMARK OFFICE
P.O. BOX 1450
ALEXANDRIA, VA 22313-1450
www.uspto.gov

DNAX RESEARCH INC.
LEGAL DEPARTMENT
901 CALIFORNIA AVENUE
PALO ALTO CA 94304

COPY MAILED

FEB 26 2009

OFFICE OF PETITIONS

In re Application of	:	
CHIRICA et al.	:	DECISION ON APPLICATION
Application No. 10/667,289	:	FOR PATENT TERM ADJUSTMENT
Filed: September 18, 2003	:	
Attorney Docket No. DX01074B	:	

This is a decision on the "APPLICATION FOR PATENT TERM ADJUSTMENT INCLUDING REQUEST FOR RECONSIDERATION OF PATENT TERM AJDUSTMENT INDICATED IN NOTICE OF ALLOWANCE (37 C.F.R. § 1.705(b)" filed June 6, 2008. Applicants request that the initial determination of patent term adjustment under 35 U.S.C. 154(b) be corrected from 482 days to 651 days.

The application for patent term adjustment is **DISMISSED**.

On March 11, 2008, the Office mailed the Determination of Patent Term Adjustment under 35 U.S.C. 154(b) in the above-identified application. The Notice stated that the patent term adjustment (PTA) to date is 482 days. On June 6, 2008, applicants timely submitted the instant application for patent term adjustment[1]. Applicants state that the patent issuing from the application is not subject to a terminal disclaimer.

Applicants dispute the period of adjustment of 543 days entered pursuant to 37 CFR 1.702(a)(1) and 1.703(a)(1) for Office delay in failing to mail the first Office action under 35 U.S.C. 132 no later than 14 months after the actual filing date of the application. Applicants assert that 543 days of patent term

[1] The Office records show that the issue fee was also received on June 9, 2008.

adjustment under 37 CFR 1.702(a)(1) and 1.703(a)(1) is in error because the Office failed to appreciate that the Restriction Requirement mailed on May 15, 2006, was withdrawn by the nonfinal Office action of October 31, 2006. Applicants contend that the Restriction Requirement should more properly have been vacated and that the October 31, 2006 mailing date of the nonfinal Office action should have been used to calculate the period of adjustment pursuant to 37 CFR 1.702(a)(1) and 1.703(a)(1).[1]

RELEVANT STATUTES AND REGULATIONS

35 U.S.C. 154(b)(1)(A)(i) provides that:

— Subject to the limitations under paragraph (2), if the issue of an original patent is delayed due to the failure of the Patent and Trademark Office to—

(i) provide at least one of the notifications under section 132 of this title or a notice of allowance under section 151 of this title not later than 14 months after—

(I) the date on which an application was filed under section 111(a) of this title; or

(II) the date on which an international application fulfilled the requirements of section 371 of this title[.]

37 CFR 1.702 provides that:

(a) Failure to take certain actions within specified time frames. Subject to the provisions of 35 U.S.C. 154(b) and this subpart, the term of an original patent shall be adjusted if the issuance of the patent was delayed due to the failure of the Office to:

[1] Applicants state in footnote one of the instant application for patent term adjustment that this identical issue was raised in a sister application, No. 10/667,290, in which the Examiner indicated in a second Restriction Requirement that the original Restriction Requirement was vacated. However, the Office notes that the proper procedure for when an error in an Office action is brought to the attention of the Office is for the Examiner to withdraw the previous Office action, mail a corrected or supplemental Office action, and set an appropriate period for reply.

(1) Mail at least one of a notification under 35 U.S.C. 132 or a notice of allowance under 35 U.S.C. 151 not later than fourteen months after the date on which the application was filed under 35 U.S.C. 111(a) or fulfilled the requirements of 35 U.S.C. 371 in an international application[.]

37 CFR 1.703 provides, in pertinent part, that:

(a) The period of adjustment under § 1.702(a) is the sum of the following periods:

(1) The number of days, if any, in the period beginning on the day after the date that is fourteen months after the date on which the application was filed under 35 U.S.C. 111(a) or fulfilled the requirements of 35 U.S.C. 371 and ending on the date of mailing of either an action under 35 U.S.C. 132, or a notice of allowance under 35 U.S.C. 151, whichever occurs first[.]

OPINION

Applicants' arguments and evidence have been considered. In light of the application history, it has been determined that the period of adjustment of 543 days for Office delay pursuant to 37 CFR 1.702(a)(1) is correct. It is undisputed that the Office mailed an action under 35 U.S.C. 132 in the form of a Restriction Requirement on May 15, 2006, fourteen months and 543 days after the actual filing date of this application. On August 15, 2006, applicants filed a response within three months of the mailing date of the Restriction Requirement. On October 31, 2006, the Office mailed a nonfinal Office action, which states in pertinent part:

> [] Applicant's request for the withdrawal of the restriction requirement filed 8/15/2006 is acknowledged. Applicant requests the withdrawal based on the preliminary amendments filed 9/18/2003. Therefore, Office will withdraw the restriction requirement of 5/15/2006. Claims 24-31 are pending and are examined.

Nonfinal Office action dated 10/31/06, p. 2.

The subsequent mailing of another Office action under 35 U.S.C. 132 does not alter the date used in calculation of the period of adjustment. Pursuant to 35 U.S.C. 154(b)(1)(A), applicants are only entitled to day-to-day restoration of term lost as a result of delay created by the Office, after the first 14 months of pendency of the application before the Office, to the extent that the Office failed to make an objection or argument under 35 U.S.C. 132 until May 15, 2006. The fact that the Office later withdrew the Restriction Requirement does not negate the fact that the Office took action within the meaning of 37 CFR 1.702(a)(1) on May 15, 2006. Thus, it is correct for the Office to use the date of May 15, 2006, in calculating the period of adjustment due to the examination delay in initially acting on this application. See Changes to Implement Patent Term Adjustment under Twenty-Year Patent Term; Final Rule, 65 Fed. Reg. 54366 (September 18, 2000). Accordingly, the period of adjustment of 543 days is correct and will not be changed.

In view thereof, the patent term adjustment at the time of the mailing of the notice of allowance remains 482 days.

The $200.00 fee set forth in 37 CFR 1.18(e) is acknowledged. No additional fees are required.

The application is being forwarded to the Office of Data Management for issuance of the patent.

The patent term adjustment indicated on the patent (as shown on the Issue Notification mailed about three weeks prior to patent issuance) will include any additional adjustment accrued both for Office delay in issuing the patent more than four months after payment of the issue fee and satisfaction of all outstanding requirements, and for the Office taking in excess of three years to issue the patent.

Telephone inquiries specific to this matter should be directed to Christina Tartera Donnell, Senior Petitions Attorney, at (571) 272-3211.

Nancy Johnson
Senior Petitioners Attorney
Office of Petitions

UNITED STATES PATENT AND TRADEMARK OFFICE

Commissioner for Patents
United States Patent and Trademark Office
P.O. Box 1450
Alexandria, VA 22313-1450
www.uspto.gov

DNAX RESEARCH INC.
LEGAL DEPARTMENT
901 CALIFORNIA AVENUE
PALO ALTO, CA 94304

COPY MAILED

FEB 04 2008

OFFICE OF PETITIONS

In re Application of :
Madaline Chirica et al :
Application No. 10/667,290 : ON PETITION
Filed: September 18, 2003 :
Attorney Docket No. DX01074B1

This is a decision on the petition, filed January 31, 2008 under 37 CFR 1.313(c)(2) to withdraw the above-identified application from issue after payment of the issue fee.

The petition is **GRANTED**.

The above-identified application is withdrawn from issue for consideration of a submission under 37 CFR 1.114 (request for continued examination). See 37 CFR 1.313(c)(2).

Petitioner is advised that the issue fee paid on December 21, 2007 in the above-identified application cannot be refunded. If, however, the above-identified application is again allowed, petitioner may request that it be applied towards the issue fee required by the new Notice of Allowance.[1]

Telephone inquiries should be directed to Irvin Dingle at (571) 272-3210.

This matter is being referred to Technology Center AU 1647 for processing of the request for continued examination under 37 CFR 1.114 and for consideration of the concurrently filed Information Disclosure Statement.

Irvin Dingle
Petitions Examiner
Office of Petitions

---

[1] The request to apply the issue fee to the new Notice may be satisfied by completing and returning the new Issue Fee Transmittal Form PTOL-85(b), which includes the following language thereon: Commissioner for Patents is requested to apply the Issue Fee and Publication Fee (if any) or re-apply any previously paid issue fee to the application identified above. Petitioner is advised that, whether a fee is indicated as being due or not, the Issue Fee Transmittal Form **must** be completed and timely submitted to avoid abandonment. Note the language in bold text on the first page of the Notice of Allowance and Fee(s) Due (PTOL-85).

UNITED STATES PATENT AND TRADEMARK OFFICE

COMMISSIONER FOR PATENTS
UNITED STATES PATENT AND TRADEMARK OFFICE
P.O. BOX 1450
ALEXANDRIA, VA 22313-1450
www.uspto.gov

Paper No.

DNAX RESEARCH INC.
LEGAL DEPARTMENT
901 CALIFORNIA AVENUE
PALO ALTO CA 94304

COPY MAILED

FEB 2 0 2008

OFFICE OF PETITIONS

In re Application of	:	
Chirica et al.	:	ON APPLICATION
Application No. 10/667,290	:	FOR
Filed: September 18, 2003	:	PATENT TERM ADJUSTMENT
Attorney Docket No. DX01074B1	:	

This is in response to the APPLICATION FOR PATENT TERM ADJUSTMENT INCLUDING REQUEST FOR RECONSIDERATION OF PATENT TERM ADJUSMENT INDICATED IN NOTICE OF ALLOWANCE (37 C.F.R. §1.705)(b)) December 20, 2007. Applicants request correction of the patent term adjustment indicated in the Notice of Allowance mailed October 3, 2007 from five hundred forty-three (543) days to seven hundred thirteen (713) days.

On October 3, 2007, the Office mailed a Determination of Patent Term Adjustment under 35 U.S.C. 154(b) in the above-identified application. The Notice stated that the patent term adjustment (PTA) to date is 543 days. On December 20, 2007, applicants filed the instant paper.

However, prior to a decision on the application for patent term adjustment being rendered, on January 31, 2008, applicant filed a petition to withdraw from issue along with a request for continued examination (RCE). By decision mailed February 4, 2008, the withdrawal from issue was granted. Prosecution was reopened.

In view thereof, a decision is being **held in abeyance** until after the mailing of any new Notice of Allowance and the filing (or resubmission) of any application for patent term adjustment under 37 CFR 1.705(b). A new determination of patent term

adjustment will accompany any new Notice of Allowance and will include any further adjustments or reductions accrued to date. Applicant must submit a timely application for patent term adjustment in response to any new Notice of Allowance. An application for patent term adjustment under 37 CFR 1.705(b) is properly filed after the mailing of the Notice of Allowance on which the application issues and prior to payment of the issue fee (or a request for reapplication of the issue fee) in response to that Notice. A copy of this decision should accompany the application for patent term adjustment, along with a request to apply the fee set forth in 37 CFR 1.18(e) paid on December 20, 2007.

Technology Center AU 1647 has been advised of this decision. The application is, thereby, forwarded to the Technology Center for consideration of the RCE by the examiner.

Telephone inquiries specific to this decision should be directed to the undersigned at (571) 272-3219.

Nancy Johnson
Senior Petitions Attorney
Office of Petitions

UNITED STATES PATENT AND TRADEMARK OFFICE

COMMISSIONER FOR PATENTS
UNITED STATES PATENT AND TRADEMARK OFFICE
P.O. BOX 1450
ALEXANDRIA, VA 22313-1450
www.uspto.gov

Paper No.

DNAX RESEARCH INC.
LEGAL DEPARTMENT
901 CALIFORNIA AVENUE
PALO ALTO CA 94304

COPY MAILED

JUL 07 2008

OFFICE OF PETITIONS

In re Application of	:	
Chirica et al.	:	ON APPLICATION
Application No. 10/667,290	:	FOR
Filed: September 18, 2003	:	PATENT TERM ADJUSTMENT
Attorney Docket No. DX01074B1	:	

This is in response to the APPLICATION FOR PATENT TERM ADJUSTMENT INCLUDING REQUEST FOR RECONSIDERATION OF PATENT TERM ADJUSTMENT INDICATED IN NOTICE OF ALLOWANCE (37 C.F.R. §1.705)(b)) filed June 6, 2008. Applicants request correction of the patent term adjustment indicated in the Notice of Allowance mailed March 11, 2008 from five hundred forty-three (543) days to seven hundred thirteen (713) days.

The application for patent term adjustment is **GRANTED to the extent indicated herein**.

The Office has updated the PAIR screen to reflect that the correct Patent Term Adjustment (PTA) determination at the time of the mailing of the Notice of Allowance is six hundred seventy-two **(672)** days. A copy of the updated PAIR screen, showing the correct determination, is enclosed.

By decision mailed February 4, 2008, this application was withdrawn from issue. Accordingly, on decision mailed February 20, 2008, the decision on an application for patent term adjustment (including fee) timely filed December 20, 2007 was held in abeyance until the mailing of a new Determination of Patent Term Adjustment.

On March 11, 2008, the Office mailed a new Determination of Patent Term Adjustment under 35 U.S.C. 154(b) in the above-identified application. The Notice stated that the patent term adjustment (PTA) to date is 543 days. The instant application for patent term adjustment was timely resubmitted.[1] Applicants state that the determination is in error due to failure to appreciate that the first requirement for restriction in the case had been vacated based on an Office error. Applicants assert that the correct patent term adjustment under 37 C.F.R. § 1.702(a)(1) is 713 days. Applicants state that there was no circumstance that constitutes a failure to engage in reasonable efforts to conclude processing or examination of the application.

A review of the record confirms that on November 1, 2006, a restriction requirement vacating the May 15, 2006 action was mailed. In this instance, the November 1, 2006 date will be used in calculating the period of adjustment under § 1.702(a)(1). Thus, the period of adjustment is 713 days, counting the number of days beginning on November 19, 2004 and ending on November 1, 2006.

However, there was a circumstance that constitutes a failure to engage by applicants. A review of the record also reveals that an additional period of reduction of 41 days pursuant to 37 CFR 1.704(c)(10) should have been entered. A Notice of Allowance was mailed on October 3, 2007. Applicants filed a Request for Continued Examination (RCE) and IDS (and petition to withdraw from issue) on January 31, 2008. Prior to filing the RCE, applicant paid the Issue Fee. This set the calculation of the period of reduction pursuant to 37 CFR 1.704(b), if any, for applicant delay. The filing of the RCE and IDS after the mailing of the Notice of Allowance constituted a failure to engage pursuant to 37 CFR 1.704(c)(10). This period is 41 days, counting the number of days in the period beginning on January 31, 2008, the date of filing of the RCE and IDS and ending on March 11, 2008, the date of mailing of the new Notice of Allowance in response.

In view thereof, the correct initial determination of the patent term adjustment at the time of the mailing of the notice of allowance on March 11, 2008 is six hundred seventy-two (672) days (713 - 41).

---

[1] PALM records indicate that the issue fee was paid on June 9, 2008.

Payment of the fee set forth in 37 CFR 1.18(e) on December 20, 2007 is acknowledged. No additional fee is required.

The application is being forwarded to the Office of Data Management for issuance of a patent. The patent term adjustment indicated on the patent (as shown on the Issue Notification mailed about three weeks prior to patent issuance) will include any additional adjustment accrued both for Office delay in issuing the patent more than four months after payment of the issue fee and satisfaction of all outstanding requirements, and for the Office taking in excess of three years to issue the patent (to the extent that the three-year period does not overlap with periods already accorded and the period is not consumed by the request for continued examination).

Telephone inquiries specific to this matter should be directed to the undersigned at (571) 272-3219.

Nancy Johnson
Senior Petitions Attorney
Office of Petitions

Enclosure: Copy of REVISED PTA calculation

Day : Wednesday

PALM INTRANET

Date: 7/2/2008
Time: 16:26:16

PTA Calculations for Application: 10/667290			
Application Filing Date:	09/18/2003	PTO Delay (PTO):	543
Issue Date of Patent:		Three Years:	0
Pre-Issue Petitions:	0	Applicant Delay (APPL):	0
Post-Issue Petitions:	0	Total PTA (days):	672
PTO Delay Adjustment:	129		

File Contents History

Number	Date	Contents Description	PTO	APPL	START
97	07/02/2008	ADJUSTMENT OF PTA CALCULATION BY PTO		41	
96	07/02/2008	ADJUSTMENT OF PTA CALCULATION BY PTO		543	
95	07/02/2008	ADJUSTMENT OF PTA CALCULATION BY PTO	713		
89	03/11/2008	MAIL NOTICE OF ALLOWANCE			
88	03/06/2008	ISSUE REVISION COMPLETED			
87	03/06/2008	DOCUMENT VERIFICATION			
86	03/06/2008	NOTICE OF ALLOWANCE DATA VERIFICATION COMPLETED			
85	03/03/2008	NOTICE OF ALLOWABILITY			
84	09/18/2003	INFORMATION DISCLOSURE STATEMENT CONSIDERED			
83	01/31/2008	INFORMATION DISCLOSURE STATEMENT CONSIDERED			
77	02/20/2008	MAIL-PETITION DECISION - DISMISSED			
76	02/20/2008	PETITION DECISION - DISMISSED			
75	02/19/2008	DATE FORWARDED TO EXAMINER			
74	01/31/2008	REQUEST FOR CONTINUED EXAMINATION (RCE)			
73	02/19/2008	DISPOSAL FOR A RCE/CPA/129 (EXPRESS ABANDONMENT IF CPA)			
72	01/31/2008	INFORMATION DISCLOSURE STATEMENT (IDS) FILED			
71	02/04/2008	MAIL-RECORD PETITION DECISION OF GRANTED TO WITHDRAW FROM ISSUE			
70	02/04/2008	RECORD PETITION DECISION OF GRANTED TO WITHDRAW FROM ISSUE			
69	01/31/2008	INFORMATION DISCLOSURE STATEMENT (IDS) FILED			

68	09/18/2003	INFORMATION DISCLOSURE STATEMENT (IDS) FILED			
67	01/31/2008	PETITION ENTERED			
66	01/31/2008	WORKFLOW - REQUEST FOR RCE - BEGIN			
65	01/15/2008	APPLICATION IS CONSIDERED READY FOR ISSUE			
64	12/21/2007	ISSUE FEE PAYMENT VERIFIED			
63	12/20/2007	PETITION ENTERED			
62	12/21/2007	ISSUE FEE PAYMENT RECEIVED			
61	10/18/2007	SEQUENCE FORWARDED TO PUBS ON TAPE			
60	10/08/2007	EXPORT TO INITIAL DATA CAPTURE			
59	10/03/2007	MAIL NOTICE OF ALLOWANCE			
58	10/02/2007	ISSUE REVISION COMPLETED			
57	10/02/2007	DOCUMENT VERIFICATION			
56	10/02/2007	NOTICE OF ALLOWANCE DATA VERIFICATION COMPLETED			
55	10/01/2007	NOTICE OF ALLOWABILITY			
54	07/28/2005	INFORMATION DISCLOSURE STATEMENT CONSIDERED			
53	09/21/2007	INFORMATION DISCLOSURE STATEMENT CONSIDERED			
52	09/21/2007	INFORMATION DISCLOSURE STATEMENT (IDS) FILED			
51	09/27/2007	DATE FORWARDED TO EXAMINER			
50	09/21/2007	REQUEST FOR CONTINUED EXAMINATION (RCE)			
49	09/27/2007	DISPOSAL FOR A RCE/CPA/129 (EXPRESS ABANDONMENT IF CPA)			
48	09/21/2007	INFORMATION DISCLOSURE STATEMENT (IDS) FILED			
47	09/21/2007	INFORMATION DISCLOSURE STATEMENT (IDS) FILED			
46	07/28/2005	INFORMATION DISCLOSURE STATEMENT (IDS) FILED			
45	09/21/2007	WORKFLOW - REQUEST FOR RCE - BEGIN			
44	08/03/2007	FINISHED INITIAL DATA CAPTURE			
43	06/29/2007	EXPORT TO INITIAL DATA CAPTURE			
42	06/26/2007	MAIL NOTICE OF ALLOWANCE			
41	06/26/2007	MAIL EXAMINER'S AMENDMENT			
40	06/21/2007	ISSUE REVISION COMPLETED			

39	06/21/2007	DOCUMENT VERIFICATION			
38	06/21/2007	NOTICE OF ALLOWANCE DATA VERIFICATION COMPLETED			
37	06/21/2007	CASE DOCKETED TO EXAMINER IN GAU			
36	06/21/2007	EXAMINER'S AMENDMENT COMMUNICATION			
35	06/21/2007	NOTICE OF ALLOWABILITY			
34	06/12/2007	DATE FORWARDED TO EXAMINER			
33	06/08/2007	RESPONSE AFTER NON-FINAL ACTION			
32	03/23/2007	MAIL NON-FINAL REJECTION			
31	03/19/2007	NON-FINAL REJECTION			
30	01/06/2007	DATE FORWARDED TO EXAMINER			
29	12/22/2006	RESPONSE TO ELECTION / RESTRICTION FILED			
28	12/22/2006	REQUEST FOR EXTENSION OF TIME - GRANTED			
27	11/01/2006	MAIL RESTRICTION REQUIREMENT			
26	10/30/2006	REQUIREMENT FOR RESTRICTION / ELECTION			
25	08/21/2006	DATE FORWARDED TO EXAMINER			
24	08/15/2006	RESPONSE TO ELECTION / RESTRICTION FILED			
23	08/15/2006	REQUEST FOR EXTENSION OF TIME - GRANTED			
22	05/15/2006	MAIL RESTRICTION REQUIREMENT	543		-1
21	05/12/2006	REQUIREMENT FOR RESTRICTION / ELECTION			
20	07/28/2005	REFERENCE CAPTURE ON IDS			
19.7	07/28/2005	INFORMATION DISCLOSURE STATEMENT (IDS) FILED			
18	03/24/2004	IFW TSS PROCESSING BY TECH CENTER COMPLETE			
17.7	09/18/2003	INFORMATION DISCLOSURE STATEMENT (IDS) FILED			
16	09/18/2003	PRELIMINARY AMENDMENT			
15	03/24/2004	CASE DOCKETED TO EXAMINER IN GAU			
14	03/03/2004	APPLICATION RETURN FROM OIPE			
13	03/03/2004	APPLICATION IS NOW COMPLETE			
10	03/01/2004	PRE-EXAM OFFICE ACTION WITHDRAWN			
9	03/01/2004	APPLICATION RETURN TO OIPE			
8	03/01/2004	APPLICATION DISPATCHED FROM OIPE			
7	03/01/2004	APPLICATION IS NOW COMPLETE			
6	02/20/2004	CRF IS GOOD TECHNICALLY / ENTERED INTO DATABASE			

5	09/18/2003	CRF DISK HAS BEEN RECEIVED BY PREEXAM / GROUP / PCT			
4	12/01/2003	CASE CLASSIFIED BY OIPE			
3	12/01/2003	CLEARED BY OIPE CSR			
2	10/30/2003	IFW SCAN & PACR AUTO SECURITY REVIEW			
1	09/18/2003	INITIAL EXAM TEAM NN			

Search Another: Application# Search

EXPLANATION OF PTA CALCULATION

EXPLANATION OF PTE CALCULATION

To go back, right click here and select Back. To go forward, right click here and select Forward. To refresh, right click here and select Refresh.

Back to OASIS | Home page

UNITED STATES PATENT AND TRADEMARK OFFICE

Commissioner for Patents
United States Patent and Trademark Office
P.O. Box 1450
Alexandria, VA 22313-1450
www.uspto.gov

Paper No.

DNAX RESEARCH INC.
LEGAL DEPARTMENT
901 CALIFORNIA AVENUE
PALO ALTO CA 94304

MAILED

AUG 03 2009

OFFICE OF PETITIONS

In re Patent No. 7,411,041	:	
Chirica et al.	:	DECISION DISMISSING
Application No. 10/667290	:	REQUEST FOR
Issue Date: August 12, 2008	:	RECONSIDERATION OF
Filed: September 18, 2003	:	PATENT TERM ADJUSTMENT
Attorney Docket No. ELN-002	:	UNDER 37 CFR 1.705(d)

This is a decision on the "REQUEST FOR RECONSIDERATION OF PATENT TERM ADJUSTMENT UNDER 37 CFR §1.705(d)," filed October 10, 2008, requesting that the patent term adjustment determination for the above-identified patent be changed from six hundred seventy-two (672) days to nine hundred ninety-six (996) days.

The request for reconsideration is granted to the extent that the determination has been reconsidered; however, the request for reconsideration of patent term adjustment is **DISMISSED** with respect to making any change in the patent adjustment determination under 35 U.S.C. § 154(b) of 672 days.

BACKGROUND

On August 12, 2008, the application matured into U.S. Patent No. 7,411,041, with a revised patent term adjustment of 672 days. On October 10, 2008, patentees timely submitted this request for reconsideration of patent term adjustment (with required fee), asserting that the correct number of days of Patent Term Adjustment is 996 days.

STATUTE AND REGULATION

35 U.S.C. § 154(b) as amended by § 4402 of the American Inventors Protection Act of 1999[1] (AIPA) provides that:

> ADJUSTMENT OF PATENT TERM. –
>
> (1) PATENT TERM GUARANTEES. –
>
> (A) GUARANTEE OF PROMPT PATENT AND TRADEMARK OFFICE RESPONSES. – Subject to the limitations under paragraph (2), if the issue of an original patent is delayed due to the failure of the Patent and Trademark Office to –
>
> (i) provide at least one of the notifications under section 132 of this title or a notice of allowance under section 151 of this title not later than 14 months after –
>
> (I) the date on which an application was filed under section 111(a) of this title; or
>
> (II) the date on which an international application fulfilled the requirements of section 371 of this title;
>
> (ii) respond to a reply under section 132, or to an appeal taken under section 134, within 4 months after the date on which the reply was filed or the appeal was taken;
>
> (iii) act on an application within 4 months after the date of a decision by the Board of Patent Appeals and Interferences under section 134 or 135 or a decision by a Federal court under section 141, 145, or 146 in a case in which allowable claims remain in the application; or
>
> (iv) issue a patent within 4 months after the date on which the issue fee was paid under section 151 and all outstanding requirements were satisfied, the term of the patent shall be extended 1 day for each day after the end of the period specified in clause (i), (ii), (iii), or (iv), as the case may be, until the action described in such clause is taken.
>
> (B) GUARANTEE OF NO MORE THAN 3-YEAR APPLICATION PENDENCY. – Subject to the limitations under paragraph (2), if the issue of an original patent is delayed due to the failure of the United States Patent and Trademark Office to issue a patent within 3 years after the actual filing date of the application in the United States, not including –

[1] Public Law 106-113, 113 Stat. 1501, 1501A-557 through 1501A-560 (1999).

(i) any time consumed by continued examination of the application requested by the applicant under section 132(b);

(ii) any time consumed by a proceeding under section 135(a), any time consumed by the imposition of an order under section 181, or any time consumed by appellate review by the Board of Patent Appeals and Interferences or by a Federal court; or

(iii) any delay in the processing of the application by the United States Patent and Trademark Office requested by the applicant except as permitted by paragraph (3)(C), the term of the patent shall be extended 1 day for each day after the end of that 3-year period until the patent is issued.

(C) GUARANTEE OR ADJUSTMENTS FOR DELAYS DUE TO INTERFERENCES, SECRECY ORDERS, AND APPEALS. — Subject to the limitations under paragraph (2), if the issue of an original patent is delayed due to —

(i) a proceeding under section 135(a);

(ii) the imposition of an order under section 181; or

(iii) appellate review by the Board of Patent Appeals and Interferences or by a Federal court in a case in which the patent was issued under a decision in the review reversing an adverse determination of patentability, the term of the patent shall be extended 1 day for each day of the pendency of the proceeding, order, or review, as the case may be.

(2) LIMITATIONS. —

(A) IN GENERAL. — To the extent that periods of delay attributable to grounds specified in paragraph (1) overlap, the period of any adjustment granted under this subsection shall not exceed the actual number of days the issuance of the patent was delayed.

The implementing regulation, **37 CFR § 1.702**, provides grounds for adjustment of patent term due to examination delay under the Patent Term Guarantee Act of 1999 (original applications, other than designs, filed on or after May 29, 2000).

(a) Failure to take certain actions within specified time frames. Subject to the provisions of 35 U.S.C. 154(b) and this subpart, the term of an original patent shall be

adjusted if the issuance of the patent was delayed due to the failure of the Office to:

(1) Mail at least one of a notification under 35 U.S.C. 132 or a notice of allowance under 35 U.S.C. 151 not later than fourteen months after the date on which the application was filed under 35 U.S.C. 111(a) or fulfilled the requirements of 35 U.S.C. 371 in an international application;

(2) Respond to a reply under 35 U.S.C. 132 or to an appeal taken under 35 U.S.C. 134 not later than four months after the date on which the reply was filed or the appeal was taken;

(3) Act on an application not later than four months after the date of a decision by the Board of Patent Appeals and Interferences under 35 U.S.C. 134 or 135 or a decision by a Federal court under 35 U.S.C. 141, 145, or 146 where at least one allowable claim remains in the application; or

(4) Issue a patent not later than four months after the date on which the issue fee was paid under 35 U.S.C. 151 and all outstanding requirements were satisfied.

(b) Failure to issue a patent within three years of the actual filing date of the application. Subject to the provisions of 35 U.S.C. 154(b) and this subpart, the term of an original patent shall be adjusted if the issuance of the patent was delayed due to the failure of the Office to issue a patent within three years after the date on which the application was filed under 35 U.S.C. 111(a) or the national stage commenced under 35 U.S.C. 371(b) or (f) in an international application, but not including[2]:

In pertinent part, 37 CFR § 1.703 provides for calculation of the periods, as follows:

Period of adjustment of patent term due to examination delay.

(a) The period of adjustment under § 1.702(a) is the sum of the following periods:

---

[2] (1) Any time consumed by continued examination of the application under 35 U.S.C. 132(b);

(2) Any time consumed by an interference proceeding under 35 U.S.C. 135(a);

(3) Any time consumed by the imposition of a secrecy order under 35 U.S.C. 181;

(4) Any time consumed by review by the Board of Patent Appeals and Interferences or a Federal court; or

(5) Any delay in the processing of the application by the Office that was requested by the applicant.

(1) The number of days, if any, in the period beginning on the day after the date that is fourteen months after the date on which the application was filed under 35 U.S.C. 111(a) or fulfilled the requirements of 35 U.S.C. 371 and ending on the date of mailing of either an action under 35 U.S.C. 132, or a notice of allowance under 35 U.S.C. 151, whichever occurs first;

(2) The number of days, if any, in the period beginning on the day after the date that is four months after the date a reply under § 1.111 was filed and ending on the date of mailing of either an action under 35 U.S.C. 132, or a notice of allowance under 35 U.S.C. 151, whichever occurs first;

(3) The number of days, if any, in the period beginning on the day after the date that is four months after the date a reply in compliance with § 1.113(c) was filed and ending on the date of mailing of either an action under 35 U.S.C. 132, or a notice of allowance under 35 U.S.C. 151, whichever occurs first;

(4) The number of days, if any, in the period beginning on the day after the date that is four months after the date an appeal brief in compliance with § 41.37 of this title was filed and ending on the date of mailing of any of an examiner's answer under § 41.39 of this title, an action under 35 U.S.C. 132, or a notice of allowance under 35 U.S.C. 151, whichever occurs first;

(5) The number of days, if any, in the period beginning on the day after the date that is four months after the date of a final decision by the Board of Patent Appeals and Interferences or by a Federal court in an appeal under 35 U.S.C. 141 or a civil action under 35 U.S.C. 145 or 146 where at least one allowable claim remains in the application and ending on the date of mailing of either an action under 35 U.S.C. 132 or a notice of allowance under 35 U.S.C. 151, whichever occurs first; and

(6) The number of days, if any, in the period beginning on the day after the date that is four months after the date the issue fee was paid and all outstanding requirements were satisfied and ending on the date a patent was issued.

(b) The period of adjustment under § 1.702(b) is the number of days, if any, in the period beginning on the day after the date that is three years after the date on which

the application was filed under 35 U.S.C. 111(a) or the national stage commenced under 35 U.S.C. 371(b) or (f) in an international application and ending on the date a patent was issued, but not including the sum of the following periods[3]:

37 CFR 1.703(f) provides that:

> The adjustment will run from the expiration date of the patent as set forth in 35 U.S.C. 154(a)(2). To the extent that periods of delay attributable to the grounds specified in §1.702 overlap, the period of adjustment granted under this section shall not exceed the actual number of days the issuance of the patent was delayed. The term of a patent entitled to adjustment under § 1.702 and this section shall be adjusted for the sum of the periods calculated under paragraphs (a) through (e) of this section, to the extent that such periods are not overlapping, less the sum of the periods calculated under § 1.704. The date indicated on any certificate of mailing or transmission under § 1.8 shall not be taken into account in this calculation.

---

[3] (1) The number of days, if any, in the period beginning on the date on which a request for continued examination of the application under 35 U.S.C. 132(b) was filed and ending on the date the patent was issued;

(2)(i) The number of days, if any, in the period beginning on the date an interference was declared or redeclared to involve the application in the interference and ending on the date that the interference was terminated with respect to the application; and (ii) The number of days, if any, in the period beginning on the date prosecution in the application was suspended by the Office due to interference proceedings under 35 U.S.C. 135(a) not involving the application and ending on the date of the termination of the suspension;

(3)(i) The number of days, if any, the application was maintained in a sealed condition under 35 U.S.C. 181; (ii) The number of days, if any, in the period beginning on the date of mailing of an examiner's answer under § 41.39 of this title in the application under secrecy order and ending on the date the secrecy order was removed; (iii) The number of days, if any, in the period beginning on the date applicant was notified that an interference would be declared but for the secrecy order and ending on the date the secrecy order was removed; and (iv) The number of days, if any, in the period beginning on the date of notification under § 5.3(c) of this chapter and ending on the date of mailing of the notice of allowance under 35 U.S.C. 151; and,

(4) The number of days, if any, in the period beginning on the date on which a notice of appeal to the Board of Patent Appeals and Interferences was filed under 35 U.S.C. 134 and § 41.31 of this title and ending on the date of the last decision by the Board of Patent Appeals and Interferences or by a Federal court in an appeal under 35 U.S.C. 141 or a civil action under 35 U.S.C. 145, or on the date of mailing of either an action under 35 U.S.C. 132, or a notice of allowance under 35 U.S.C. 151, whichever occurs first, if the appeal did not result in a decision by the Board of Patent Appeals and Interferences.

OPINION

The application matured into U.S. patent No. 7,411,041, on August 12, 2008, with a revised patent term adjustment of six hundred seventy-two (672) days. Patentees argue that the determination of 672 days remains in error in that pursuant to 35 U.S.C. § 154(b) the Office failed to issue a patent within three years of the actual filing date of the above-referenced application in accordance with 37 CFR § 1.702(b) **and** failed to take certain action(s) into account, and within the time frames specified in 37 CFR § 1.702(a), as interpreted in Wyeth et al. v. Dudas, 580 F. Supp. 2d 138, 88 U.S.P.Q. 2d 1538 (D.D.C. 2008).

Specifically, patentees argue for an additional period of delay under § 154(b)(1)(B) from the day after the date that is three years after filing the application (September 19, 2006) and ending on the date that the first RCE was filed (September 21, 2007), or 368 days.

Patentees next assert that the Office delay of 713 days by decision mailed July 7, 2008[4], overlaps with the period of delay of 368 days under § 154(b)(1)(B), by 44 days. Specifically, Patentees assert a period of overlap beginning on the date that is fourteen months after the date on which the application was filed (September 18, 2003), and ending on the date of mailing of the Restriction Requirement mailed November 1, 2006, overlaps the period of delay beginning on the day after the date that is three years after filing the application (September 19, 2006), and ending with the filing of the first RCE (September 21, 2007), by 44 days. Removing this overlap, the resulting non-overlap period of delay under § 154(b)(1)(A) is 669 (713 - 44) days.

Patentees do not contest the period of Applicant delay of 41 days by decision mailed July 7, 2008[5].

---

[4] The decision agreed with Applicants calculation of Office delay of 713 days under 37 CFR 1.703(a)(1) beginning on the date that is fourteen months after the date on which the application was filed (September 18, 2003), and ending on the date of mailing of the Restriction Requirement mailed November 1, 2006, and not based upon a Restriction Requirement mailed May 15, 2006, said mailing having been vacated by the Examiner.

[5] The decision included Applicant delay of 41 days under 37 CFR 1.702(c)(10).

The sum of the non-overlapping delays as calculated by Patentees, therefore, is 669 + 368 = 1037 days.

The Office agrees that the RCE was filed 368 days from the day after the date that is three years after filing the application. However, the Office does not agree that the delay of 713 days should be offset by 44 days, or that patentees should accrue an additional period of delay under § 154(b)(1)(B) of 368 days. At issue is whether patentees should accrue 368 days of patent term adjustment under § 154(b)(1)(B) and whether the 713 days of patent term adjustment under 37 CFR 1.703(a)(1) should be offset by 44 days of overlap.

The Office does not agree and contends that both periods of 368 days and 44 days overlap. Patentees' interpretation of the period of overlap has been considered and found to be incorrect. Patentees' calculation of the period of overlap is inconsistent with the Office's interpretation of this provision. 35 U.S.C. 154(b)(2)(A) limits the adjustment of patent term, as follows:

> to the extent that the periods of delay attributable to grounds specified in paragraph (1) overlap, the period of any adjustment granted under this subsection shall not exceed the actual number of days the issuance of the patent was delayed.

Likewise, 37 CFR 1.703(f) provides that:

> To the extent that periods of delay attributable to the grounds specified in §1.702 overlap, the period of adjustment granted under this section shall not exceed the actual number of days the issuance of the patent was delayed.

As explained in *Explanation of 37 CFR 1.703(f) and of the United States Patent and Trademark Office Interpretation of 35 U.S.C. 154(b)(2)(A)*, 69 Fed. Reg. 34283 (June 21, 2004), the Office interprets 35 U.S.C. 154(b)(2)(A) as permitting either patent term adjustment under 35 U.S.C. 154(b)(1)(A)(i)-(iv), or patent term adjustment under 35 U.S.C. 154(b)(1)(B), but not as permitting patent term adjustment under both 35 U.S.C. 154(b)(1)(A)(i)-(iv) and 154(b)(1)(B). Accordingly, the Office implements the overlap provision as follows:

> If an application is entitled to an adjustment under 35 U.S.C. 154(b)(1)(B), the entire period during which the application was pending (except for periods excluded under 35 U.S.C. 154(b)(1)(B)(i)-(iii)), and not just the period beginning three years after the actual filing date of the application, is the period of delay under 35 U.S.C. 154(b)(1)(B) in determining whether periods of delay overlap under 35 U.S.C. 154(b)(2)(A). Thus, any days of delay for Office issuance of the patent more than 3 years after the filing date of the application, which overlap with the days of patent term adjustment accorded prior to the issuance of the patent will not result in any additional patent term adjustment. See 35 U.S.C. 154(b)(1)(B), 35 U.S.C. 154(b)(2)(A), and 37 CFR § 1.703(f). See *Changes to Implement Patent Term Adjustment Under Twenty Year Term; Final Rule*, 65 Fed. Reg. 54366 (Sept. 18, 2000). See also *Revision of Patent Term Extension and Patent Term Adjustment Provisions; Final Rule*, 69 Fed. Reg. 21704 (April 22, 2004), 1282 Off. Gaz. Pat. Office 100 (May 18, 2004). See also *Explanation of 37 CFR 1.703(f) and of the United States Patent and Trademark Office Interpretation of 35 U.S.C. 154(b)(2)(A)*, 69 Fed. Reg. 34283 (June 21, 2004).

The current wording of § 1.703(f) was revised in response to the misinterpretation of this provision by a number of applicants. The rule was slightly revised to more closely track the corresponding language of 35 U.S.C. 154(b)(2)(A). The relevant portion differs only to the extent that the statute refers back to provisions of the statute whereas the rule refers back to sections of the rule. This was not a substantive change to the rule nor did it reflect a change of the Office's interpretation of 35 U.S.C. 154(b)(2)(A). As stated in the *Explanation of 37 CFR 1.703(f) and of the United States Patent and Trademark Office Interpretation of 35 U.S.C. 154(b)(2)(A)*, the Office has consistently taken the position that if an application is entitled to an adjustment under the three-year pendency provision of 35 U.S.C. 154(b)(1)(B), the entire period during which the application was pending before the Office (except for periods excluded under 35 U.S.C. 154(b)(1)(B)(i)-(iii)), and not just the period beginning three years after the actual filing date of the application, is the relevant period under 35 U.S.C. 154(b)(1)(B) in determining whether periods of delay "overlap" under 35 U.S.C. 154(b)(2)(A).

This interpretation is consistent with the statute. Taken together the statute and rule provide that to the extent that periods of delay attributable to grounds specified in 35 U.S.C. 154(b)(1) and in corresponding §1.702 overlap, the period of adjustment granted shall not exceed the actual number of days the issuance of the patent was delayed. The grounds specified in these sections cover the A) guarantee of prompt Patent and Trademark Office responses, B) guarantee of no more than 3 year application pendency, and C) guarantee or adjustments for delays due to interference, secrecy orders and appeals. A section by section analysis of 35 U.S.C. 154(b)(2)(A) specifically provides that:

> Section 4402 imposes limitations on restoration of term. In general, pursuant to [35 U.S.C.] 154(b)(2)(A)-(C), total adjustments granted for restorations under [35 U.S.C. 154](b)(1) are reduced as follows: (1) To the extent that there are multiple grounds for extending the term of a patent that may exist simultaneously (e.g., delay due to a secrecy order under [35 U.S.C.] 181 and administrative delay under [35 U.S.C.] 154(b)(1)(A)), the term should not be extended for each ground of delay but only for the actual number of days that the issuance of a patent was delayed; See 145 Cong. Rec. S14,718[6]

As such, the period for over 3 year pendency does not as argued by patentees overlap only to the extent that the actual dates in the period beginning three years after the date on which the application was filed overlap with the actual dates in the periods for failure of the Office to take action within specified time frames. In other words, consideration of the overlap does not begin three years after the filing date of the application.

In this instance, the relevant period under 35 U.S.C. 154(b)(1)(B) in determining whether periods of delay "overlap" under 35 U.S.C. 154(b)(2)(A) is the period beginning on the filing date of the application, September 18, 2003, and ending on the date of filing of the first request for continued examination (RCE) on September 21, 2007. 713 days of patent

---

[6] The AIPA is title IV of the Intellectual Property and Communications Omnibus Reform Act of 1999 (S. 1948), which was incorporated and enacted as law as part of Pub. L. 106-113. The Conference Report for H.R. 3194, 106th Cong. 1st Sess. (1999), which resulted in Pub. L. 106-113, does not contain any discussion (other than the incorporated language) of S. 1948. A section-by-section analysis of S. 1948, however, was printed in the Congressional Record at the request of Senator Lott, See 145 Cong. Rec. S14,708-26 (1999)(daily ed. Nov. 17, 1999).

term adjustment were accorded prior to the filing of the request for continued examination for the Office failing to respond within specified time frames during the pendency of the application. All of these 713 days overlap with the 368 of patent term adjustment under 37 CFR 1.702(b). Accordingly, at issuance, the Office properly entered zero (0) additional days of patent term adjustment for the Office taking in excess of 3 years to issue the patent.

In view thereof, the Office affirms that the revised determination of patent term adjustment at the time of the issuance of the patent is 672 days (713 - 41).

CONCLUSION

The Office acknowledges that patentees previously submitted the $200 fee set forth in §1.18(e). No additional fees are required.

Telephone inquiries specific to this matter should be directed to Attorney Derek Woods, at (571) 272-3232.

Nancy Johnson
Senior Petitions Attorney
Office of Petitions

UNITED STATES PATENT AND TRADEMARK OFFICE

Commissioner for Patents
United States Patent and Trademark Office
P.O. Box 1450
Alexandria, VA 22313-1450
www.uspto.gov

OBLON, SPIVAK, MCCLELLAND, MAIER & NEUSTADT, P.C.
1940 DUKE STREET
ALEXANDRIA VA 22314

COPY MAILED

JUN 16 2005

OFFICE OF PETITIONS

In re Application of
Kiyonori Tsuda
Application No. 10/667,301
Filed: September 23, 2003
Attorney Docket Number: 243014US3

ON PETITION

This is a decision on the petition filed December 1, 2004, entitled "Petition Under 37 CFR 1.137(a) Requesting The Withdrawal of Holding of Abandonment Due to Unavoidable Delay". The petition is treated as a Petition to Withdraw Holding of Abandonment, under 37 CFR 1.181.

The petition under 37 CFR 1.181 is **GRANTED**.

The application became abandoned on February 16, 2004, for failure to file a timely response to the Notice to File Missing Parts mailed December 15, 2003, which set a two (2) month statutory period for reply. Accordingly, a Notice of Abandonment was mailed November 12, 2004.

Petitioner asserts that the Notice to File Missing Parts was never received.

The file record discloses that the Notice to File Missing Parts was mailed to the address of record. However, petitioner contends that it was not received. In support of this contention, an explanation of the docketing procedures and pages from the docketing system, wherein receipt of the Notice to File Missing Parts would have been entered, had it been received, accompanies the petition. The statement and attachments corroborate non-receipt of the Notice to File Missing Parts.

In view of the facts set forth in the petition, it is concluded that the Notice to File Missing Parts was never received. Accordingly, the petition under 37 CFR 1.137(a) is not treated and the holding of abandonment is withdrawn. Since no petition fee is due none has been charged.

Receipt of the response to the Notice to File Missing Parts mailed December 15, 2003, in the form of a properly executed Declaration and Power of Attorney and surcharge for late submission, is acknowledged.

This matter is being referred to the Office of Initial Patent Examination for further pre-examination processing.

Telephone inquiries concerning this matter may be directed to the undersigned Petitions Attorney at (571) 272-3212.

Patricia Faison-Ball

Patricia Faison-Ball
Senior Petitions Attorney
Office of Petitions

UNITED STATES PATENT AND TRADEMARK OFFICE

COMMISSIONER FOR PATENTS
UNITED STATES PATENT AND TRADEMARK OFFICE
P.O. BOX 1450
ALEXANDRIA, VA 22313-1450
www.uspto.gov

HUNTON & WILLIAMS LLP
INTELLECTUAL PROPERTY DEPARTMENT
1900 K STREET, N.W.
SUITE 1200
WASHINGTON, DC 20006-1109

COPY MAILED
OCT 0 3 2006
OFFICE OF PETITIONS

In re Application of	:	
John Hane	:	
Application No. 10/667,330	:	ON PETITION
Filed: September 23, 2003	:	
Attorney Docket No. 57132.000007	:	

This is a decision in response to the petition under 37 CFR 1.137(b), filed April 24, 2006, to revive the above-identified application.

The petition is **GRANTED**.

This application became abandoned for failure to timely reply to the final Office action mailed October 20, 2005. A Notice of Abandonment was subsequently mailed on July 24, 2006.

The present petition included a Request for Continued Examination (RCE). Petitioner explains that the RCE was inadvertently not filed when the amendment and extension of time were filed on April 20, 2006.

The application is revived for consideration of a submission under 37 CFR 1.114 (request for continued examination).

Telephone inquiries concerning this decision should be directed to the undersigned at (571) 272-3204.

The application file is being forwarded to Technology Center AU 2612, for further processing of the request for continued examination under 37 CFR 1.114.

Sherry D. Brinkley
Petitions Examiner
Office of Petitions

UNITED STATES PATENT AND TRADEMARK OFFICE

UNITED STATES DEPARTMENT OF COMMERCE
United States Patent and Trademark Office
Address: COMMISSIONER FOR PATENTS
P.O. Box 1450
Alexandria, Virginia 22313-1450
www.uspto.gov

HUNTON & WILLIAMS LLP
INTELLECTUAL PROPERTY DEPARTMENT
1900 K STREET, N.W.
SUITE 1200
WASHINGTON, DC 20006-1109

Mail Date: 04/21/2010

Applicant	: John Hane	: DECISION ON REQUEST FOR
Patent Number	: 7589626	: RECALCULATION of PATENT
Issue Date	: 09/15/2009	: TERM ADJUSTMENT IN VIEW
Appliction No	: 10/667,330	: OF WYETH AND NOTICE OF INTENT TO
Filed	: 09/23/2003	: ISSUE CERTIFICATE OF CORRECTION
		:

The Request for Recalculation is **GRANTED** to the extent indicated.

The patent term adjustment has been determined to be **41** days. The USPTO will *sua sponte* issue a certificate of correction reflecting the amount of PTA days determined by the recalculation.

Prior to the issuance of the certificate of correction, the USPTO will afford patentee an opportunity to be heard and request reconsideration. Accordingly, patentee has **one month or thirty (30) days**, whichever is longer, to file a request for reconsideration of this patent term adjustment calculation. See 35 U.S.C. 154(b)(3)(B)(ii) and 37 CFR 1.322(a)(4). No extensions of time will be granted under 37 CFR 1.136.

Patentee should use document code PET.OP if electronically filing a request for reconsideration of this patent term adjustment calculation. The patentee must also include the information required by 37 CFR 1.705(b)(2) and the fee required by 37 CFR 1.18(e). If patentee does not file a timely request for reconsideration of this patent term adjustment calculation including the information required by 37 CFR 1.705(b)(2) and the fee required by 37 CFR 1.18(e), the USPTO will issue a certificate of correction reflecting the PTA determination noted above.

Patentee should be aware that in order to preserve the right to review in the United States District Court for the District of Columbia of the USPTO patent term adjustment determination, patentee must ensure that he or she also take the steps required under 35 U.S.C. 154(b)(4)(A) in a timely manner. Nothing in the request for recalculation should be construed as providing an alternative time frame for commencing a civil action under 35 U.S.C. 154(b)(4)(A).

Any questions concerning this decision should be directed to the Office of Patent Legal Administration at 571-272-7702.

UNITED STATES PATENT AND TRADEMARK OFFICE

Commissioner for Patents
United States Patent and Trademark Office
P.O. Box 1450
Alexandria, VA 22313-1450
www.uspto.gov

ROSENBERG, KLEIN & LEE
3458 ELLICOTT CENTER DRIVE-SUITE 101
ELLICOTT CITY MD 21043

COPY MAILED

JAN 31 2008

OFFICE OF PETITIONS

In re Application of	:	
Kuo-Tseng Lin	:	
Application No.10/667,341	:	DECISION ON PETITION
Filed:September 23, 2003	:	
Attorney Docket No.MR1035-1111/CIP	:	

This is a decision on the petition under the unintentional provisions of 37 CFR 1.137(b), filed June 28, 2007, to revive the above-identified application.

The petition is **DISMISSED**.

Any request for reconsideration of this decision must be submitted within TWO (2) MONTHS from the mail date of this decision. Extensions of time under 37 CFR 1.136(a) are permitted. The reconsideration request should include a cover letter entitled "Renewed Petition under 37 CFR 1.137(b)." This is **not** a final agency action within the meaning of 5 U.S.C. § 704.

The application became abandoned for failure to timely reply to the Restriction Requirement mailed November 22, 2004.

A grantable petition under 37 CFR 1.137(b) must be accompanied by: (1) the required reply, unless previously filed; (2) the petition fee as set forth in 37 CFR 1.17(m); (3) a statement that the entire delay in filing the required reply from the due date for the reply until the filing of a grantable petition pursuant to 37 CFR 1.137(b) was unintentional; and (4) any terminal disclaimer (and fee as set forth in 37 CFR 1.20(d)) required by 37 CFR 1.137(d). Where there is a question as to whether either the abandonment or the delay in filing a petition under 37 CFR 1.137 was unintentional, the Director may require additional information. *See* MPEP 711.03(c)(II)(C) and (D). The instant petition lacks item (3).

There are three periods to be considered during the evaluation of a petition under 37 CFR 1.137(b):

(1) the delay in reply that originally resulted in the abandonment;

(2) the delay in filing an initial petition pursuant to 37 CFR 1.137(b) to revive the application; and

(3) the delay in filing a grantable petition pursuant to 37 CFR 1.137(b) to revive the application.

Currently, the delay has not been shown to the satisfaction of the Director to be unintentional for periods (1) and (2).

As to Period (1):

The patent statute at 35 U.S.C. § 41(a)(7) authorizes the Director to revive an "unintentionally abandoned application." The legislative history of Public Law 97-247 reveals that the purpose of 35 U.S.C. § 41(a)(7) is to permit the Office to have more discretion than in 35 U.S.C. §§ 133 or 151 to revive abandoned applications in appropriate circumstances, but places a limit on this discretion, stating that "[u]nder this section a petition accompanied by either a fee of $500 or a fee of $50 **would not be granted where the abandonment** or the failure to pay the fee for issuing the patent **was intentional** as opposed to being unintentional or unavoidable." [emphasis added]. See H.R. Rep. No. 542, 97th Cong., 2d Sess. 6-7 (1982), *reprinted in* 1982 U.S.C.C.A.N. 770-71. The revival of an intentionally abandoned application is antithetical to the meaning and intent of the statute and regulation.

35 U.S.C. § 41(a)(7) authorizes the Director to accept a petition "for the revival of an unintentionally abandoned application for a patent." As amended December 1, 1997, 37 CFR 1.137(b)(3) provides that a petition under 37 CFR 1.137(b) must be accompanied by a statement that the delay was unintentional, but provides that "[t]he Commissioner may require additional information where there is a question whether the delay was unintentional." Where, as here, there is a question whether the initial delay was unintentional, the petitioner must meet the burden of establishing that the delay was unintentional within the meaning of 35 U.S.C. § 41(a)(7) and 37 CFR 1.137(b). *See* In re Application of G, 11 USPQ2d 1378, 1380 (Comm'r Pats. 1989); 37 CFR 1.137(b). Here, in view of the inordinate delay (2 ½ years)

in resuming prosecution, there is a question whether the entire delay was unintentional. Petitioner should note that the issue is not whether some of the delay was unintentional by any party; rather, the issue is whether the entire delay has been shown to the satisfaction of the Director to be unintentional.

The question under 37 CFR 1.137(b) for period (1) is whether the delay on the part of the party having the right or authority to reply to avoid abandonment (or not reply) was unintentional. Accordingly, any renewed petition must clearly identify the party having the right to reply to avoid abandonment on December 23, 2004. That party, in turn must explain what effort(s) was made to further reply to the outstanding Office action and, further, why no reply was filed. If no effort was made to further reply, then that party must explain why the delay in this application does not result from a deliberate course of action (or inaction). Likewise, as Rosenberg, Klein & Lee was counsel of record at the time of abandonment, Rosenberg, Klein & Lee should explain why this application became abandoned while it was under their control and what efforts Rosenberg, Klein & Lee made to further reply of itself and with whom this matter was discussed outside of Rosenberg, Klein & Lee. Copies of any correspondence relating to the filing, or to not filing a further reply to the outstanding Office action are required from responsible person(s), and whoever else was involved with this application at the time of abandonment. Statements are required from any and all persons then at Rosenberg, Klein & Lee, and the responsible person(s) having firsthand knowledge of the circumstances surrounding the lack of a reply to the outstanding Office action. As the courts have made clear, it is pointless for the USPTO to revive a long abandoned application without an adequate showing that the delay did not result from a deliberate course of action. *See* Lawman Armor v. Simon, 2005 U.S. Dist. LEXIS 10843, 74 USPQ2d 1633 (DC EMich 2005); Field Hybrids, LLC v. Toyota Motor Corp., 2005 U.S. Dist. LEXIS 1159 (D. Minn Jan. 27, 2005); Lumenyte Int'l Corp. v. Cable Lite Corp., Nos. 96-1011, 96-1077, 1996 U.S. App. LEXIS 16400, 1996 WL 383927 (Fed. Cir. July 9, 1996) (unpublished) (patents held unenforceable due to a finding of inequitable conduct in submitting an inappropriate statement that the abandonment was unintentional).

As to Period (2):

Likewise, where the applicant deliberately chooses not to seek or persist in seeking the revival of an abandoned application, or where the applicant deliberately chooses to delay seeking the revival of an abandoned application, the resulting delay in

seeking revival of the abandoned application cannot be considered as "unintentional" within the meaning of 37 CFR 1.137(b). *See* MPEP 711.03(c).

The language of both 35 U.S.C. § 41(a)(7) and 37 CFR 1.137(b) are clear and unambiguous, and, furthermore, without qualification. That is, the delay in filing the reply during prosecution, as well as in filing the petition seeking revival, must have been, without qualification, "unintentional" for the reply to now be accepted on petition. The Office requires that the entire delay be at least unintentional as a prerequisite to revival of an abandoned application to prevent abuse and injury to the public. *See* H.R. Rep. No. 542, 97th Cong., 2d Sess. 7 (1982), reprinted in 1982 U.S.C.C.A.N. 771 ("[i]n order to prevent abuse and injury to the public the Commissioner . . . could require applicants to act promptly after becoming aware of the abandonment"). The December 1997 change to 37 CFR 1.137 did not create any new right to overcome an intentional delay in seeking revival, or in renewing an attempt at seeking revival, of an abandoned application. *See* Changes to Patent Practice and Procedure; Final Rule Notice, 62 Fed. Reg. 53131, 53160 (October 10, 1997), 1203 Off. Gaz. Pat. Office 63, 87 (October 21, 1997), which clearly stated that any protracted delay (here, over two years) could trigger, as here, a request for additional information. As the courts have since made clear, a protracted delay in seeking revival, as here, requires a petitioner's detailed explanation seeking to excuse the delay as opposed to USPTO acceptance of a general allegation of unintentional delay. *See* Lawman Armor v. Simon, 2005 U.S. Dist. LEXIS 10843, 74 USPQ2d 1633, at 1637-8 (DC EMich 2005); Field Hybrids, LLC v. Toyota Motor Corp., 2005 U.S. Dist. LEXIS 1159 (D. Minn Jan. 27, 2005) at *21-*23. Statements are required from any and all persons then at Rosenberg, Klein & Lee and the responsible person(s) having firsthand knowledge of the circumstances surrounding the protracted delay, after the abandonment date, in seeking revival.

As noted in MPEP 711.03(c)(II), subsection D, in instances in which such petition was not filed within 1 year of the date of abandonment of the application, applicants should include:

> (A) the date that the applicant first became aware of the abandonment of the application; and
> (B) a showing as to how the delay in discovering the abandoned status of the application occurred despite the exercise of due care or diligence on the part of the applicant.

In either instance, applicant's failure to carry the burden of proof to establish that the "entire" delay was "unavoidable" or "unintentional" may lead to the denial of a petition under 37 CFR 1.137(b), regardless of the circumstances that originally resulted in the abandonment of the application. *See also* New York University v. Autodesk, 2007 U.S. DIST LEXIS, U.S.District LEXIS 50832, *10 -*12 (S.D.N.Y. 2007)(protracted delay in seeking revival undercuts assertion of unintentional delay).

Any renewed petition may be addressed as follows:

By Mail: Mail Stop PETITION
Commissioner for Patents
P. O. Box 1450
Alexandria, VA 22313-1450

By hand: U. S. Patent and Trademark Office
Customer Service Window, Mail Stop Petitions
Randolph Building
401 Dulany Street
Alexandria, VA 22314

The centralized facsimile number is **(571) 273-8300.**

Correspondence regarding this decision may also be filed through the electronic filing system of the USPTO.

To expedite consideration, petitioner may wish to contact the undersigned regarding the filing of the renewed petition under 37 CFR 1.137(b).

Telephone inquiries concerning this decision should be directed to the undersigned at (571) 272-3208.

Karen Creasy

Karen Creasy
Petitions Examiner
Office of Petitions

UNITED STATES PATENT AND TRADEMARK OFFICE

Commissioner for Patents
United States Patent and Trademark Office
P.O. Box 1450
Alexandria, VA 22313-1450
www.uspto.gov

COPY MAILED
AUG 29 2008

ROSENBERG,KLEIN & LEE
3458 ELLICOTT CENTER DRIVE-SUITE 101
ELLICOTT CITY MD 21043

In re Application of	:	
Kuo-Tseng Lin	:	
Application No. 10/667,341	:	ON PETITION
Filed: September 23, 2003	:	
Attorney Docket No. MR1035-1111/CIP	:	

This is a decision on the renewed petition under the unintentional provisions of 37 CFR 1.137(b), filed June 2, 2008, to revive the above-identified application.

The petition is **DISMISSED**.

Any request for reconsideration of this decision must be submitted within TWO (2) MONTHS from the mail date of this decision. Extensions of time under 37 CFR 1.136(a) are permitted. The reconsideration request should include a cover letter entitled "Renewed Petition under 37 CFR 1.137(b)." This is **not** a final agency action within the meaning of 5 U.S.C. § 704.

The application became abandoned for failure to timely reply to the Restriction Requirement mailed November 22, 2004.

A grantable petition under 37 CFR 1.137(b) must be accompanied by: (1) the required reply, unless previously filed; (2) the petition fee as set forth in 37 CFR 1.17(m); (3) a statement that the entire delay in filing the required reply from the due date for the reply until the filing of a grantable petition pursuant to 37 CFR 1.137(b) was unintentional; and (4) any terminal disclaimer (and fee as set forth in 37 CFR 1.20(d)) required by 37 CFR 1.137(d). Where there is a question as to whether either the abandonment or the delay in filing a petition under 37 CFR 1.137 was unintentional, the Director may require additional information. See MPEP 711.03(c)(II)(C) and (D). The instant petition lacks item(s) (3).

A statement from Ms. Chin-Ping Yu to explain the unintentional delay is required.

Further correspondence with respect to this matter should be addressed as follows:

By Mail: Mail Stop PETITION
Commissioner for Patents
P. O. Box 1450
Alexandria, VA 22313-1450

By hand: U. S. Patent and Trademark Office
Customer Service Window, Mail Stop Petitions
Randolph Building
401 Dulany Street
Alexandria, VA 22314

The centralized facsimile number is **(571) 273-8300.**

Telephone inquiries concerning this decision should be directed to the undersigned at (571) 272-3208.

Karen Creasy

Karen Creasy
Petitions Examiner
Office of Petitions

UNITED STATES PATENT AND TRADEMARK OFFICE

Commissioner for Patents
United States Patent and Trademark Office
P.O. Box 1450
Alexandria, VA 22313-1450
www.uspto.gov

COPY MAILED
SEP 29 2008
OFFICE OF PETITIONS

ROSENBERG, KLEIN & LEE
3458 ELLICOTT CENTER DRIVE-SUITE 101
ELLICOTT CITY MD 21043

In re Application of	:	
Kuo-Tseng Lin	:	
Application No. 10/667,341	:	DECISION GRANTING PETITION
Filed: September 23, 2003	:	UNDER 37 CFR 1.137(b)
Attorney Docket No. MR1035-1111/CIP	:	

This is a supplemental decision on the renewed petition under 37 CFR 1.137(b), filed June 2, 2008, to revive the above-identified application.

The petition is **GRANTED**.

The petition satisfies the conditions for revival pursuant to the provisions of 37 CFR 1.137(b) in that (1) the reply in the form of an amendment/election; (2) the petition fee; and (3) the required statement of unintentional delay have been received. Accordingly, the reply to the Restriction Requirement mailed November 22, 2004, is accepted as having been unintentionally delayed.

Telephone inquiries concerning this decision should be directed to the undersigned at (571) 272-3208.

This matter is being referred to Technology Center AU 2873 to consider the reply received June 28, 2007.

Karen Creasy

Karen Creasy
Petitions Examiner
Office of Petitions

UNITED STATES PATENT AND TRADEMARK OFFICE

UNITED STATES DEPARTMENT OF COMMERCE
United States Patent and Trademark Office
Address: COMMISSIONER FOR PATENTS
P.O. Box 1450
Alexandria, Virginia 22313-1450
www.uspto.gov

STERNE, KESSLER, GOLDSTEIN & FOX P.L.L.C.
1100 NEW YORK AVENUE, N.W.
WASHINGTON, DC 20005

Mail Date: 04/21/2010

Applicant	: Maurice Caldwell	: DECISION ON REQUEST FOR
Patent Number	: 7668086	: RECALCULATION of PATENT
Issue Date	: 02/23/2010	: TERM ADJUSTMENT IN VIEW
Appliction No	: 10/667,385	: OF WYETH AND NOTICE OF INTENT TO
Filed	: 09/23/2003	: ISSUE CERTIFICATE OF CORRECTION
		:

The Request for Recalculation is **GRANTED** to the extent indicated.

The patent term adjustment has been determined to be **1888** days. The USPTO will *sua sponte* issue a certificate of correction reflecting the amount of PTA days determined by the recalculation.

Prior to the issuance of the certificate of correction, the USPTO will afford patentee an opportunity to be heard and request reconsideration. Accordingly, patentee has **one month or thirty (30) days**, whichever is longer, to file a request for reconsideration of this patent term adjustment calculation. See 35 U.S.C. 154(b)(3)(B)(ii) and 37 CFR 1.322(a)(4). No extensions of time will be granted under 37 CFR 1.136.

Patentee should use document code PET.OP if electronically filing a request for reconsideration of this patent term adjustment calculation. The patentee must also include the information required by 37 CFR 1.705(b)(2) and the fee required by 37 CFR 1.18(e). If patentee does not file a timely request for reconsideration of this patent term adjustment calculation including the information required by 37 CFR 1.705(b)(2) and the fee required by 37 CFR 1.18(e), the USPTO will issue a certificate of correction reflecting the PTA determination noted above.

Patentee should be aware that in order to preserve the right to review in the United States District Court for the District of Columbia of the USPTO patent term adjustment determination, patentee must ensure that he or she also take the steps required under 35 U.S.C. 154(b)(4)(A) in a timely manner. Nothing in the request for recalculation should be construed as providing an alternative time frame for commencing a civil action under 35 U.S.C. 154(b)(4)(A).

Any questions concerning this decision should be directed to the Office of Patent Legal Administration at 571-272-7702.

UNITED STATES PATENT AND TRADEMARK OFFICE

Commissioner for Patents
United States Patent and Trademark Office
P.O. Box 1450
Alexandria, VA 22313-1450
www.uspto.gov

POSZ & BETHARDS PLC
11250 ROGER BACON DR
SUITE 10
RESTON VA 20190

COPY MAILED

DEC 23 2004

OFFICE OF PETITIONS

In re Application of	:	
Takeda, et a.	:	
Application No. 10/667,404	:	DECISION ON
Filed: September 23, 2003	:	PETITION
Attorney Docket No. 26E-002	:	

This is in response to the petition to revive an unintentionally abandoned application under 37 CFR 1.137(b), filed December 7, 2004.

The petition under 37 CFR 1.137(b) is **GRANTED**.

The above-identified application became abandoned for failure to timely pay the issue fee and publication fees as required by the Notice of Allowance mailed on July 21, 2004. This notice set a statutory period for reply of three months. No issue fee and publication fee having been received, the above-identified application became abandoned on October 22, 2004. A Notice of Abandonment was mailed on December 2, 2004.

With the instant petition, petitioner paid the petition fee together with the publication and issue fees, and made the proper statement of unintentional delay.

The $1,370 petition fee, $1,370 issue fee, and $300 publication fee have been charged to Deposit Account No. 50-1147, as authorized.

The application is being forwarded to the Office of Patent Publication for processing into a patent.

Telephone inquiries related to this decision should be directed to the undersigned at (571)272-3207.

Cliff Congo
Petitions Attorney
Office of Petitions

UNITED STATES PATENT AND TRADEMARK OFFICE

Commissioner for Patents
United States Patent and Trademark Office
P.O. Box 1450
Alexandria, VA 22313-1450
www.uspto.gov

G. DONALD WEBER, JR.
18442 TAFT AVENUE
VILLA PARK CA 92861

MAILED

NOV 09 2009

OFFICE OF PETITIONS

In re Patent No. 6,918,141	:	
Issue Date: July 19, 2005	:	
Application No. 10/667,417	:	DECISION ON PETITION
Filed: September 23, 2003	:	
Attorney Docket No. PDI-35	:	

This is a decision on the petition under 37 CFR 1.378(c), filed September 04, 2009, to accept the unintentionally delayed payment of a maintenance fee for the above-identified patent.

The petition is **GRANTED**.

This patent expired on July 19, 2009 for failure to pay the three (3) and one-half year maintenance fee. Since this petition was submitted within twenty-four months after the six-month grace period provided in 37 CFR 1.362(e), the petition was timely filed under the provisions of 37 CFR 1.378(c).

The maintenance fee is hereby accepted and the above-identified patent is reinstated as of the mail date of this decision.

Telephone inquiries concerning this decision should be directed to the undersigned at (571) 272-4231.

The patent file is being forwarded to Files Repository.

Michelle R. Eason
Paralegal Specialist
Office of Petitions

UNITED STATES PATENT AND TRADEMARK OFFICE

COMMISSIONER FOR PATENTS
UNITED STATES PATENT AND TRADEMARK OFFICE
P.O. BOX 1450
ALEXANDRIA, VA 22313-1450
WWW.USPTO.GOV

Paper No. None

MILLER THOMPSON, LLP
Scotia Plaza
40 King Street West, Suite 5800
TORONTO ON M5H 3S1 CA CANADA

COPY MAILED
MAY 05 2006
OFFICE OF PETITIONS

In re Application of Steve Brnjac Application No. 10/667,422 Filed: September 23, 2003 Attorney Docket Number: 062349-0001 Title: RETRACTABLE HOOK ASSEMBLY FOR MOUNTING ON A SURFACE	:	DECISION ON PETITION UNDER 37 C.F.R. §1.137(b)

This is a decision on the petition filed February 13, 2006, pursuant to 37 C.F.R. §1.137(b)[1], to revive the above-identified application.

The above-identified application became abandoned for failure to reply within the meaning of 37 CFR §1.113 in a timely manner to the final Office action mailed March 23, 2005, which set a shortened statutory period for reply of three (3) months. An after-final amendment was received on May 6, 2005, and an advisory action was mailed on May 20, 2005. On June 2, 2005, a second after-final amendment was received. No extensions of

1 A grantable petition pursuant to 37 CFR 1.137(b) must be accompanied by:
(1) The reply required to the outstanding Office action or notice, unless previously filed;
(2) The petition fee as set forth in § 1.17(m);
(3) A statement that the entire delay in filing the required reply from the due date for the reply until the filing of a grantable petition pursuant to this paragraph was unintentional. The Commissioner may require additional information where there is a question whether the delay was unintentional, and;
(4) Any terminal disclaimer (and fee as set forth in § 1.20(d)) required pursuant to paragraph (d) of this section.

time under the provisions of 37 CFR §1.136(a) were obtained, and no further responses were received. Accordingly, the above-identified application became abandoned on June 24, 2005. A notice of abandonment was mailed on January 9, 2006.

With this petition, Petitioner has submitted the petition fee, and the required statement of unintentional delay. A terminal disclaimer is not required.

The amendment of June 2, 2005 has been reviewed by the Examiner, and it has been deemed to constitute the required reply.

As such, the petition is **GRANTED**.

The Technology Center will be notified of this decision, so that the amendment of June 2, 2005 can be further processed.

Petitioner has also submitted a one-month extension of time. An extension of time under 37 C.F.R. §1.136 must be filed prior to the expiration of the maximum extendable period for reply[2]. Accordingly, since the $ 60 extension of time submitted with the petition on February 13, 2006 was subsequent to the maximum extendable period for reply, this fee is unnecessary and will be credited to petitioner's deposit account.

Telephone inquiries regarding *this decision* should be directed to the undersigned at (571) 272-3225. All other inquiries concerning examination procedures or status of the application should be directed to the Technology Center.

It is noted that the address listed on the petition differs from the address of record. The application file does not indicate a change of correspondence address has been filed in this case, although the address given on the petition differs from the address of record. If petitioner desires to receive future correspondence regarding this application, the change of correspondence address must be submitted. A courtesy copy of this decision will be mailed to petitioner. However, all future correspondence will be directed to the address of record until such time as appropriate instructions are received to the contrary. Petitioner will not receive future correspondence related to this application unless Change of Correspondence Address, Patent Form (PTO/SB/122) is submitted for the above-identified application. For petitioner's convenience, a blank

---

2 See In re Application of S., 8 USPQ2d 1630, 1631 (Comm'r Pats. 1988).

Change of Correspondence Address, Patent Form (PTO/SB/122), may be found at http://www.uspto.gov/web/forms/sb0122.pdf.

Paul Shanoski
Senior Attorney
Office of Petitions
United States Patent and Trademark Office

cc: EUGENE GIERCZAK
20 Queen Street West, Suite 2500
TORONTO ON M5H 3S1 CA CANADA

UNITED STATES PATENT AND TRADEMARK OFFICE

COMMISSIONER FOR PATENTS
UNITED STATES PATENT AND TRADEMARK OFFICE
P.O. BOX 1450
ALEXANDRIA, VA 22313-1450
www.uspto.gov

Paper No.

KENYON & KENYON LLP
1500 K STREET N.W.
SUITE 700
WASHINGTON DC 20005

COPY MAILED
JUN 26 2006
OFFICE OF PETITIONS

In re Application of :
Tokura et al. : DECISION ON PETITION
Application No. 10/667,451 :
Filed: September 23, 2003 :
Attorney Docket No. 10517/185 :

This is a decision on the "REQUEST FOR RESCINDMENT OF NOTICE OF ABANDONMENT" filed June 10, 2005. This request was recently forwarded to the undersigned for consideration.

The above-identified application became abandoned for failure to file a timely and proper reply to the non-final Office action mailed October 28, 2004. The Office action set a three-month shortened statutory period for reply, with extensions of time obtainable under § 1.136(a). No reply considered received and no extension obtained, the above-identified application became abandoned on January 29, 2005. A Notice of Abandonment was mailed on May 31, 2005.

In response, petitioner timely filed the instant petition. Petitioner states that on January 12, 2005, applicants filed a Response to Office action, as evidenced by the attached copies along with a PTO stamped postcard indicating that the Response was filed on January 12, 2005.

A postcard receipt, which itemizes and properly identifies the items, which are being filed, serves as *prima facie* evidence of receipt in the Office of all items listed thereon on the date stamped thereon by the Office. See MPEP 503. A review of

petitioner's postcard receipt reveals that: 1) it was date stamped as received in the USPTO on January 12, 2005; 2) it specifically identifies the items being filed, including "Response to Office Action (7 pages)" and "Request for Approval of Drawing Corrections (1 pg., Fig. 3)" and 3) it lacks any annotation of non-receipt of any item denoted on the postcard. Thus, the evidence shows that the response as re-supplied on petition was timely filed on June 10, 2005.

In view thereof, the Notice of Abandonment mailed May 31, 2005 is **VACATED** and the holding of abandonment is hereby **WITHDRAWN**.

The petition under § 1.181 is **GRANTED**.

No fee is required on petition under § 1.181.

Technology Center AU 3681 has been advised of this decision. The application file is, thereby, forwarded to the Technology Center's technical support staff to withdraw the holding of abandonment and consideration of the response to the non-final Office action mailed October 28, 2004 as resubmitted on petition filed June 10, 2005.

Telephone inquiries specific to this decision should be directed to the undersigned at (571) 272-3219.

Nancy Johnson
Senior Petitions Attorney
Office of Petitions

UNITED STATES PATENT AND TRADEMARK OFFICE

UNITED STATES DEPARTMENT OF COMMERCE
United States Patent and Trademark Office
Address: COMMISSIONER FOR PATENTS
P.O. Box 1450
Alexandria, Virginia 22313-1450
www.uspto.gov

HUNTON & WILLIAMS LLP/RAMBUS INC.
INTELLECTUAL PROPERTY DEPARTMENT
1900 K STREET, N.W.
SUITE 1200
WASHINGTON, DC 20006-1109

Mail Date: 04/21/2010

Applicant	: Anthony Bessios	: DECISION ON REQUEST FOR
Patent Number	: 7620116	: RECALCULATION of PATENT
Issue Date	: 11/17/2009	: TERM ADJUSTMENT IN VIEW
Appliction No	: 10/667,492	: OF WYETH AND NOTICE OF INTENT TO
Filed	: 09/23/2003	: ISSUE CERTIFICATE OF CORRECTION
		:

The Request for Recalculation is **GRANTED** to the extent indicated.

The patent term adjustment has been determined to be **1644** days. The USPTO will *sua sponte* issue a certificate of correction reflecting the amount of PTA days determined by the recalculation.

Prior to the issuance of the certificate of correction, the USPTO will afford patentee an opportunity to be heard and request reconsideration. Accordingly, patentee has **one month or thirty (30) days**, whichever is longer, to file a request for reconsideration of this patent term adjustment calculation. See 35 U.S.C. 154(b)(3)(B)(ii) and 37 CFR 1.322(a)(4). No extensions of time will be granted under 37 CFR 1.136.

Patentee should use document code PET.OP if electronically filing a request for reconsideration of this patent term adjustment calculation. The patentee must also include the information required by 37 CFR 1.705(b)(2) and the fee required by 37 CFR 1.18(e). If patentee does not file a timely request for reconsideration of this patent term adjustment calculation including the information required by 37 CFR 1.705(b)(2) and the fee required by 37 CFR 1.18(e), the USPTO will issue a certificate of correction reflecting the PTA determination noted above.

Patentee should be aware that in order to preserve the right to review in the United States District Court for the District of Columbia of the USPTO patent term adjustment determination, patentee must ensure that he or she also take the steps required under 35 U.S.C. 154(b)(4)(A) in a timely manner. Nothing in the request for recalculation should be construed as providing an alternative time frame for commencing a civil action under 35 U.S.C. 154(b)(4)(A).

Any questions concerning this decision should be directed to the Office of Patent Legal Administration at 571-272-7702.

UNITED STATES PATENT AND TRADEMARK OFFICE

Commissioner for Patents
United States Patent and Trademark Office
P.O. Box 1450
Alexandria, VA 22313-1450
www.uspto.gov

KELLEY DRYE & WARREN LLP
3050 K STREET, NW
SUITE 400
WASHINGTON, DC 20007

COPY MAILED

JUL 29 2008

OFFICE OF PETITIONS

In re Application of	:	
Hugh Trout, III, et al.	:	
Application No. 10/667,521	:	DECISION ON PETITION
Filed: September 23, 2003	:	TO WITHDRAW
Attorney Docket No.	:	FROM RECORD
	:	

This is a decision on the Request to Withdraw as attorney or agent of record under 37 C.F.R. § 1.36(b), filed January 18, 2008.

The request is **APPROVED**.

A grantable request to withdraw as attorney/agent of record must be signed by every attorney/agent seeking to withdraw or contain a clear indication that one attorney is signing on behalf of another/others. A request to withdraw will not be approved unless at least 30 (thirty) days would remain between the date of approval and the later of the expiration date of a time to file a response or the expiration date of the maximum time period which can be extended under 37 C.F.R. § 1.136(a).

The request was signed by John Coulby on behalf of all attorneys of record who are associated with customer No. 25243.

All attorneys/agents associated with the Customer Number 25243 have been withdrawn.

Applicant is reminded that there is no attorney of record at this time.

The correspondence address of record has been changed and the new correspondence address is the address indicated below.

There are no pending Office actions at the present time.

Telephone inquiries concerning this decision should be directed to undersigned at 571-272-1642.

April M. Wise
Petitions Examiner
Office of Petitions

cc: HUGH H. TROUT, III, MD
8218 WISCONSIN AVENUE
SUITE 204
BETHESDA, MD 20814

UNITED STATES PATENT AND TRADEMARK OFFICE

UNITED STATES DEPARTMENT OF COMMERCE
United States Patent and Trademark Office
Address: COMMISSIONER FOR PATENTS
P.O. Box 1450
Alexandria, Virginia 22313-1450
www.uspto.gov

APPLICATION NUMBER	FILING OR 371(C) DATE	FIRST NAMED APPLICANT	ATTY. DOCKET NO./TITLE
10/667,521	09/23/2003	Hugh Trout III	

CONFIRMATION NO. 1449

POWER OF ATTORNEY NOTICE

OC000000031218570

25243
KELLEY DRYE & WARREN LLP
3050 K STREET, NW
SUITE 400
WASHINGTON, DC 20007

Date Mailed: 07/28/2008

NOTICE REGARDING CHANGE OF POWER OF ATTORNEY

This is in response to the Power of Attorney filed 01/18/2008.

- The withdrawal as attorney in this application has been accepted. Future correspondence will be mailed to the new address of record. 37 CFR 1.33.

/amwise/

Office of Data Management, Application Assistance Unit (571) 272-4000, or (571) 272-4200, or 1-888-786-0101

UNITED STATES PATENT AND TRADEMARK OFFICE

COMMISSIONER FOR PATENTS
UNITED STATES PATENT AND TRADEMARK OFFICE
P.O. BOX 1450
ALEXANDRIA, VA 22313-1450
www.uspto.gov

COPY MAILED
JUL 05 2006
OFFICE OF PETITIONS

WARNER NORCROSS & JUDD LLP
900 FIFTH THIRD CENTER
111 LYON STREET, N.W.
GRAND RAPIDS, MI 49503-2487

In re Application of
Bradley D. Miller, et al.
Application No. 10/667,527
Filed: September 22, 2003
Attorney Docket No. 45781.83588-001

ON PETITION

This is a decision on the petition, filed February 13, 2006, to revive the above-identified application under the provisions of 37 CFR 1.137(b).

The petition is **GRANTED**.

The above-identified application became abandoned for failure to respond in a timely manner to the Notice of Allowability mailed June 24, 2005. A Notice of Abandonment was mailed on October 28, 2005. In response, on February 13, 2006, the present petition was filed.

The petition is found to comply with the requirements of 37 CFR 1.137(b).

The application is being referred to the Office of Publications to oversee the review of the drawing filed February 13, 2006.

Telephone inquires related to this decision may be directed to the undersigned at (571) 272-3204. Status inquires related to processing at Publishing Division should be directed to (571) 272-4200.

Sherry D. Brinkley
Petitions Examiner
Office of Petitions

UNITED STATES PATENT AND TRADEMARK OFFICE

Commissioner for Patents
United States Patent and Trademark Office
P.O. Box 1450
Alexandria, VA 22313-1450
www.uspto.gov

PATRICK HAGAN
1601 MARKET STREET
SUITE 2400
PHILADELPHIA PA 19103

COPY MAILED

NOV 0 4 2005

OFFICE OF PETITIONS

In re Application of :
SURETTE :
Application No. 10/667,529 :
Filed: September 22, 2003 :
Attorney Docket No. 3009-P02297US2 :

DECISION
ON PETITION

This is a decision on the petition under 37 CFR 1.137(b), filed August 1, 2005, to revive the above-identified application.

The petition is **GRANTED**.

The above-identified application became abandoned for failure to reply in a timely manner to the non-final office action mailed November 4, 2004, which set a shortened statutory period for reply of three (3) months. No extensions of time under the provisions of 37 CFR 1.136(a) were obtained. Accordingly, the application became abandoned on February 5, 2005.

The petition satisfies the conditions for revival pursuant to the provisions of 37 CFR 1.137(b) in that (1) the reply in the form of an amendment and argument; (2) the petition fee of $750; and (3) the required statement of unintentional delay have been received. Accordingly, the reply to the non-final action of November 4, 2004 is accepted as having been unintentionally delayed.

Telephone inquiries concerning this decision should be directed to Denise Pothier at (571) 272-4787.

The application matter is being forwarded to Technology Center Art Unit 1651.

Frances Hicks
Petitions Examiner
Office of Petitions

UNITED STATES PATENT AND TRADEMARK OFFICE

Commissioner for Patents
United States Patent and Trademark Office
P.O. Box 1450
Alexandria, VA 22313-1450
www.uspto.gov

JUN 07 2004

GREENBERG TRAURIG LLP
2450 COLORADO AVENUE, SUITE 400E
SANTA MONICA CA 90404

In re Application of	:	
Solomon Emeth	:	
Serial No.: 10/667,553	:	DECISION ON PETITION
Filed: September 22, 2003	:	
For: Billboard Garment	:	

This is in response to the petition applicant filed on October 14, 2003 to make the above-identified application special under the provisions of 37 CFR 1.102(d).

Applicant has satisfied the provisions set forth in M.P.E.P. 708.02, VIII, thus the petition is **GRANTED**.

The application will be forwarded to the examiner for action on the merits commensurate with this decision.

Should there be any questions with regard to this letter please contact John Kittle by letter addressed to the Director, Technology Center 3700/2900, P.O. Box 1450 Alexandria, VA 22313-1450, or by telephone at (703) 308-0873 or by facsimile transmission at (703) 308-3139.

John E. Kittle

John E. Kittle
Director
Technology Center 3700/2900

UNITED STATES PATENT AND TRADEMARK OFFICE

Commissioner for Patents
United States Patent and Trademark Office
P.O. Box 1450
Alexandria, VA 22313-1450
www.uspto.gov

LEYDIG VOIT & MAYER, LTD
TWO PRUDENTIAL PLAZA
180 NORTH STETSON AVENUE
SUITE 4900
CHICAGO IL 60601-6731

COPY MAILED

JUL 0 6 2007

OFFICE OF PETITIONS

In re Application of	:	
Garth Boehm, et al.	:	
Application No. 10/667,570	:	DECISION ON PETITION
Filed: September 22, 2003	:	TO WITHDRAW
Attorney Docket No. 224559	:	FROM RECORD
	:	

This is a decision on the Request to Withdraw as attorney or agent of record under 37 C.F.R. § 1.36(b) filed January 25, 2007.

The request is **APPROVED**.

A grantable request to withdraw as attorney/agent of record must be signed by every attorney/agent seeking to withdraw or contain a clear indication that one attorney is signing on behalf of another/others. A request to withdraw will not be approved unless at least 30 (thirty) days would remain between the date of approval and the later of the expiration date of a time to file a response or the expiration date of the maximum time period which can be extended under 37 C.F.R. § 1.136(a).

The request was signed by Jeremy C. Lowe on behalf of all attorneys of record who are associated with this application.

All attorneys/agents associated with this application have been withdrawn.

Applicant is reminded that there is no attorney of record at this time.

The request to change the correspondence of record is not acceptable as the requested correspondence address is not that of: (1) the first named signing inventor; or (2) an intervening assignee of the entire interest under 37 C.F.R 3.71. All future communications from the Office will be directed to the first named signing inventor at the first copied address below until otherwise properly notified by the applicant.

In order to request or take action in a patent matter, the assignee must establish its ownership of the patent to the satisfaction of the Director. In this regard, a Statement under 37 CFR 3.73(b) must have either: (i) documentary evidence of a chain of title from the original owner to the assignee (*e.g.*, copy of an executed assignment), and a statement affirming that the documentary evidence of the chain of title from the original owner to the assignee was or concurrently is being submitted for recordation pursuant to § 3.11; or (ii) a statement specifying where documentary evidence of a chain of title from the original owner to the assignee is recorded in the assignment records of the Office (*e.g.*, reel and frame number).

There are no pending Office actions at the present time.

Telephone inquiries concerning this decision should be directed to undersigned at 571-272-1642.

April M. Wise
April M. Wise
Petitions Examiner
Office of Petitions

cc: GARTH BOEHM
530 MOUNTAIN DRIVE
WESTFIELD, NJ 07090

cc: PATRICK HALLORAN, PH.D. JD
3141 MUIRFIELD ROAD
CENTER VALLEY, PA 18034

SPE RESPONSE FOR CERTIFICATE OF CORRECTION

Paper No.: _____

DATE : 07/15/09

TO SPE OF : ART UNIT 3761

SUBJECT : Request for Certificate of Correction for Appl. No.: 10667580 Patent No.: 7488303 B1

Please respond to this request for a certificate of correction within 7 days.

FOR IFW FILES:

Please review the requested changes/corrections as shown in the **COCIN** document(s) in the IFW application image. No new matter should be introduced, nor should the scope or meaning of the claims be changed.

Please complete the response (see below) and forward the completed response to scanning using document code **COCX**.

FOR PAPER FILES:

Please review the requested changes/corrections as shown in the attached certificate of correction. Please complete this form (see below) and forward it with the file to:

Certificates of Correction Branch (C of C)
Randolph Square 9D40-D
Palm Location 7580

You can fax the Directors/SPE response to 571-270-9990

Lamonte Newsome

Certificates of Correction Branch

703-756-1574

Thank You For Your Assistance

The request for issuing the above-identified correction(s) is hereby:
Note your decision on the appropriate box.

- ◆ **Approved** — **All** changes apply.
- ❑ **Approved in Part** — Specify below which changes **do not** apply.
- ❑ **Denied** — State the reasons for denial below.

Formatted: Bullets and Numbering

Comments: _____ aa

All changes are approved

SPE RESPONSE FOR CERTIFICATE OF CORRECTION

/T. Zalukaeva/ 3761

SPE Art Unit

UNITED STATES PATENT AND TRADEMARK OFFICE

Commissioner for Patents
United States Patent and Trademark Office
P.O. Box 1450
Alexandria, VA 22313-1450
www.uspto.gov

RADER FISHMAN & GRAUER PLLC
LION BUILDING
1233 20TH STREET N.W., SUITE 501
WASHINGTON, DC 20036

COPY MAILED

MAR 0 4 2005

OFFICE OF PETITIONS

In re Application of	:	
Takashi Nakazawa, et al.	:	
Application No. 10/667,598	:	ON PETITION
Filed: September 23, 2003	:	
Attorney Docket No. NIL-199	:	

This is a decision on the petition under 37 CFR 1.137(b), filed January 7, 2005, 2004, to revive the above-identified application.

The petition is **GRANTED.**

The above-identified application became abandoned for failure to reply in a timely manner to the non-final Office action mailed February 2, 2004, which set a shortened statutory period for reply of three (3) months. No extensions of time under the provisions of 37 CFR 1.136(a) were obtained. Accordingly, the application became abandoned on May 3, 2004.

Telephone inquiries concerning this decision should be directed to the undersigned at (571) 272-3229.

The application matter is being referred to Technology Center 2800, Art Unit 2832 for further processing.

Retta Williams

Retta Williams
Petitions Examiner
Office of Petitions
Office of the Deputy Commissioner
for Patent Examination Policy

UNITED STATES PATENT AND TRADEMARK OFFICE

Commissioner for Patents
United States Patent and Trademark Office
P.O. Box 1450
Alexandria, VA 22313-1450
www.uspto.gov

McGuireWoods LLP
1750 Tyson Boulevard, Suite 1800
McLean, VA 22102

COPY MAILED
MAY 0 9 2006
OFFICE OF PETITIONS

In re Application of :
Dureseti Chidambarrao et al :
Application No. 10/667,601 : DECISION GRANTING PETITION
Filed: September 23, 2003 : UNDER 37 CFR 1.313(c)(2)
Attorney Docket No. FIS920030186US1 :

This is a decision on the petition, filed May 5, 2006, under 37 CFR 1.313(c)(2) to withdraw the above-identified application from issue after payment of the issue fee.

The petition is **GRANTED**.

The above-identified application is withdrawn from issue for consideration of a submission under 37 CFR 1.114 (request for continued examination). See 37 CFR 1.313(c)(2).

Petitioner is advised that the issue fee paid on March 30, 2006 in the above-identified application cannot be refunded. If, however, the above-identified application is again allowed, petitioner may request that it be applied towards the issue fee required by the new Notice of Allowance.[1]

Telephone inquiries should be directed to the undersigned at (571) 272-3218.

This matter is being referred to Technology Center AU 2812 for processing of the request for continued examination under 37 CFR 1.114 and for consideration of the concurrently filed amendment and Information Disclosure Statement.

Frances Hicks
Petitions Examiner
Office of Petitions

C:\Documents and Settings\FHicks\My Documents\470\may9\667601.wpd

---

[1] *The request to apply the issue fee to the new Notice may be satisfied by completing and returning the new Part B – Fee(s) Transmittal Form (along with any balance due at the time of submission), which includes the following language thereon: "The Director of the USPTO is requested to apply the Issue Fee and Publication Fee (if any) or to re-apply any previously paid issue fee in the application identified above. Petitioner is advised that, whether a fee is indicated as being due or not, the Issue Fee Transmittal Form* ***must*** *be completed and timely submitted to avoid abandonment. Note the language in bold text on the first page of the Notice of Allowance and Fee(s) Due (PTOL-85).*

UNITED STATES PATENT AND TRADEMARK OFFICE

UNITED STATES DEPARTMENT OF COMMERCE
United States Patent and Trademark Office
Address: COMMISSIONER FOR PATENTS
P.O. Box 1450
Alexandria, Virginia 22313-1450
www.uspto.gov

STERNE, KESSLER, GOLDSTEIN & FOX P.L.L.C.
1100 NEW YORK AVENUE, N.W.
WASHINGTON, DC 20005

Mail Date: 04/21/2010

Applicant	: Maurice Caldwell	: DECISION ON REQUEST FOR
Patent Number	: 7664134	: RECALCULATION of PATENT
Issue Date	: 02/16/2010	: TERM ADJUSTMENT IN VIEW
Appliction No	: 10/667,604	: OF WYETH AND NOTICE OF INTENT TO
Filed	: 09/23/2003	: ISSUE CERTIFICATE OF CORRECTION
		:

The Request for Recalculation is **GRANTED** to the extent indicated.

The patent term adjustment has been determined to be **1879** days. The USPTO will *sua sponte* issue a certificate of correction reflecting the amount of PTA days determined by the recalculation.

Prior to the issuance of the certificate of correction, the USPTO will afford patentee an opportunity to be heard and request reconsideration. Accordingly, patentee has **one month or thirty (30) days**, whichever is longer, to file a request for reconsideration of this patent term adjustment calculation. See 35 U.S.C. 154(b)(3)(B)(ii) and 37 CFR 1.322(a)(4). No extensions of time will be granted under 37 CFR 1.136.

Patentee should use document code PET.OP if electronically filing a request for reconsideration of this patent term adjustment calculation. The patentee must also include the information required by 37 CFR 1.705(b)(2) and the fee required by 37 CFR 1.18(e). If patentee does not file a timely request for reconsideration of this patent term adjustment calculation including the information required by 37 CFR 1.705(b)(2) and the fee required by 37 CFR 1.18(e), the USPTO will issue a certificate of correction reflecting the PTA determination noted above.

Patentee should be aware that in order to preserve the right to review in the United States District Court for the District of Columbia of the USPTO patent term adjustment determination, patentee must ensure that he or she also take the steps required under 35 U.S.C. 154(b)(4)(A) in a timely manner. Nothing in the request for recalculation should be construed as providing an alternative time frame for commencing a civil action under 35 U.S.C. 154(b)(4)(A).

Any questions concerning this decision should be directed to the Office of Patent Legal Administration at 571-272-7702.

UNITED STATES PATENT AND TRADEMARK OFFICE

Commissioner for Patents
United States Patent and Trademark Office
P.O. Box 1450
Alexandria, VA 22313-1450
www.uspto.gov

MAILED

NOV 30 2005

TECHNOLOGY CENTER 2100

LEE & HAYES PLLC
421 W RIVERSIDE AVENUE
SUITE 500
SPOKANE, WA 99201

In re Application of:
ENGLAND, et al.
Application Serial No.: 10/667,612
Filed: September 22, 2003
For: **SECURE EXECUTION OF PROGRAM CODE**

DECISION ON
PETITION *under 37 CFR 1.102*

This is a decision on the petition, filed on November 7, 2005 under MPEP 708.01(I), requesting an expedited action on the merits. This petition has been considered as a request to affirm that this application is under "special" status in accordance with 37 CFR 1.102.

This application is a continuation of SN 09/287,393 filed April 6, 1999.

708.01 [R-2] List of Special Cases, states in part:
(I) Applications pending more than 5 years, ***including those which, by relation to a prior United States application, have an effective pendency of more than 5 years***. See MPEP § 707.02. [emphasis added]

In accordance with MPEP section 708.01(I), applications pending over 5 years, including those which by relation to a prior United States application, should be considered special. This application by virtue of its prolonged pendency is considered special in accordance with PTO policy.

Accordingly, the petition is **Granted**.

The examiner will be notified that this application should be considered as "special" and appropriate for expedited action. If the application is subsequently allowed, it will be given priority for printing. See M.P.E.P. §1309.

Brian L. Johnson
Special Program Examiner
Technology Center 2100
Computer Architecture, Software, and Information Security

UNITED STATES PATENT AND TRADEMARK OFFICE

Pet. Sec.

COMMISSIONER FOR PATENTS
UNITED STATES PATENT AND TRADEMARK OFFICE
P.O. BOX 1450
ALEXANDRIA, VA 22313-1450
www.uspto.gov

JUN 18 2004

VP
PAPER NO. ___

In re Application of
Donald E. Govani et al.
Serial Number: 10/667619
Filed: September 22, 2003
For: METHOD OF PREPARING A SYNTHETIC FUEL FROM COAL

PETITION UNDER MPEP 708.02 VI

This is in response to the petition filed September 22, 2003, requesting that the above-identified application be granted Special Status pursuant to 708.02 VI of the MPEP and 37 CFR 1.102(c) (**no fee required**).

The request for Special Status considered under Section 708.02 VI is granted because criteria under 37 CFR 1.102(c) has been met.

Accordingly the petition is **GRANTED.**

Marian C Knode

Marian C. Knode, Special Programs Examiner
Technology Center 1700
Chemical and Materials Engineering

Michael B. Martin
Patent & Licensing Department
Nalco Chemical Company
One Nalco Center
Naperville IL 60563-1198

UNITED STATES PATENT AND TRADEMARK OFFICE

Commissioner for Patents
United States Patent and Trademark Office
P.O. Box 1450
Alexandria, VA 22313-1450
www.uspto.gov

COPY MAILED

DEC 07 2005

OFFICE OF PETITIONS

LEONG C. LEI
PMB #1008
1867 YGNACIO VALLEY RD
WALNUT CREEK, CA 94598

In re Application of
HSIEH
Application No. 10/667,620
Filed: September 22, 2003
Attorney Docket No. FP10761

DECISION
ON PETITION

This is a decision on the petition under 37 CFR 1.137(b), filed November 16, 2005, to revive the above-identified application.

The petition is **GRANTED**.

The application became abandoned for failure submit the issue fee and publication fee in a timely manner in reply to the Notice of Allowance and Fee(s) Due, mailed October 6, 2004, which set a statutory period for reply of three (3) months. Accordingly, the application became abandoned on January 7, 2005.

The petition satisfies the conditions for revival pursuant to the provisions of 37 CFR 1.137(b) in that (1) the reply in the form of the issue fee and the publication fee; (2) the petition fee of $750; and (3) the required statement of unintentional delay have been received. Accordingly, the issue fee payment and the publication fee payment are accepted as having been unintentionally delayed.

Telephone inquiries concerning this decision should be directed to the undersigned at (571) 272-4787.

The application matter is referred to the Office of Patent Publication.

Denise Pothier
Petitions Examiner
Office of Petitions

UNITED STATES PATENT AND TRADEMARK OFFICE

Commissioner for Patents
United States Patent and Trademark Office
P.O. Box 1450
Alexandria, VA 22313-1450
www.uspto.gov

HEWLETT PACKARD COMPANY
INTELLECTUAL PROPERTY ADMINISTRATION
P.O. BOX 272400, 3404 E. HARMONY ROAD
FORT COLLINS, CO 80527-2400

COPY MAILED

JAN 11 2008

OFFICE OF PETITIONS

In re Application of	:	
Michael L. Witkoski et al	:	
Application No. 10/667,649	:	ON PETITION
Filed: September 22, 2003	:	
Attorney Docket No. 200303410-5	:	

This is a decision on the petition filed August 31, 2007 under 37 CFR 1.137(b), to revive the above-identified application.

The petition is **GRANTED.**

The above-identified application became abandoned for failure to submit the Issue fee and Publication fee in a timely manner in reply to the Notice of Allowance mailed May 17, 2007, which set a statutory period for reply of three (3) months. Accordingly, the above-identified application became abandoned on August 18, 2007.

The petition satisfies the conditions for revival pursuant to the provisions of 37 CFR 1.137(b) in that (1) the reply in the form of payment of the Issue fee and Publication fee; (2) the petition fee; and (3) the required statement of unintentional delay have been received. Accordingly, the issue fee is accepted as having been unintentionally delayed.

Telephone inquiries concerning this decision should be directed to the undersigned at (571) 272-3210.

This matter is being referred to the Publishing Division for further processing.

Irvin Dingle
Petitions Examiner
Office of Petitions

UNITED STATES PATENT AND TRADEMARK OFFICE

COMMISSIONER FOR PATENTS
UNITED STATES PATENT AND TRADEMARK OFFICE
P.O. BOX 1450
ALEXANDRIA, VA 22313-1450
www.uspto.gov

MAIL

SEP 21 2005

DIRECTOR OFFICE
TECHNOLOGY CENTER 2100

Michael B. Johannesen, Esq.
Lowenstein Sandler, P.C.
65 Livingston Avenue
Roseland NJ 07068

In re Application of: PHENIX, et al.
Application No. 10/667,650
Filed: September 22, 2003
For: SYSTEM AND METHOD FOR REPRESENTING A RELATIONAL DATABASE AS A JAVA OBJECT

DECISION ON PETITION TO MAKE SPECIAL (ACCELERATED EXAMINATION) UNDER M.P.E.P. §708.02 (VIII)

This is a response to the petition filed 22 September 2003 under 37 C.F.R. §1.102(d) and M.P.E.P. §708.02 (VIII): Accelerated Examination, to make the above-identified application special.

The Petition is **DISMISSED**.

M.P.E.P. §708.02, Section VIII which sets out the prerequisites for a grantable petition for Accelerated Examination under 37 C.F.R. §1.102(d) states in relevant part:

A new application (one which has not received any examination by the examiner) may be granted special status provided that applicant (and this term includes applicant's attorney or agent) complies with each of the following items:

(a) Submits a petition to make special accompanied by the fee set forth in **37 CFR 1.17(h)**;

(b) Presents all claims directed to a single invention, or if the Office determines that all the claims presented are not obviously directed to a single invention, will make an election without traverse as a prerequisite to the grant of special status;

(c) Submits a statement(s) that a pre-examination search was made, listing the field of search by class and subclass, publication, Chemical Abstracts, foreign patents, etc. The pre-examination search must be directed to the invention as claimed in the application for which special status is requested. A search made by a foreign patent office satisfies this requirement;

(d) Submits one copy each of the references deemed most closely related to the subject matter encompassed by the claims if said references are not already of record; and

(e) Submits a detailed discussion of the references, which discussion points out, with the particularity required by 37 CFR 1.111 (b) and (c), how the claimed subject matter is patentable over the references.

In those instances where the request for this special status does not meet all the prerequisites set forth above, **applicant will be notified and the defects in the request will be stated**. The application will remain in the status of a new application awaiting action in its regular turn. In those instances where a request is defective in one or more respects, applicant will be given one opportunity to perfect the request in a renewed petition to make special. If perfected, the request will then be granted. If not perfected in the first renewed petition, any additional renewed petitions to make special may or may not be considered at the discretion of the Technology Center (TC) Special Program Examiner.

The petition filed 22 September 2003 fails to adequately meet requirement (e) of the criteria set forth above. The discussion of the references does not point out with the particularity required by 37 CFR 1.111(b) and (c) how the claimed subject matter is patentable over the references.

The statement purporting to distinguish independent claim 1 from each reference recites all of the limitations of claim 1. I.e., the statement purports that the entirety of claim 1 is not taught by any of the references deemed most closely related. Such a statement is not a sufficient detailed description. (It is suggested that if the identical statement is being made to distinguish each reference from an independent claim, as in the instant petition, then the statement should simply be made once in the petition. (E.g., "Regarding independent claim 1, none of the references disclose . . . .")) Also, the discussion of the references is not sufficiently detailed. The description of each reference is only a few sentences long and gives only a cursory description.

Additionally, the petition fails to identify which references are deemed most closely related by applicants. The petition states that "Woolcott pointed out three references deemed most closely related to the claimed subject matter". However, applicants are required to identify which references are deemed most closely related. Also, only those references which are deemed most closely related should be listed in the petition. References considered by applicant to be "of interest" should not be included.

Petition to Make Special **DISMISSED**.

Petitioner is given one opportunity to perfect the petition. Any request for reconsideration must be filed within TWO MONTHS of the mail date of this decision.

Until the renewed petition is submitted, the application will be returned to the examiner's docket to await treatment on the merits in the normal order of examination.

Pinchus M. Laufer

Pinchus M. Laufer
Special Program Examiner
Technology Center 2100
Computer Architecture, Software and Information Security
571-272-3599

ds

UNITED STATES PATENT AND TRADEMARK OFFICE

Commissioner for Patents
United States Patent and Trademark Office
P.O. Box 1450
Alexandria, VA 22313-1450
www.uspto.gov

January 25, 2010

Harry B. Shubin
Millen, White, Zelano & Branigan, P.C.
2200 Clarendon Blvd., Suite 1400
Arlington, VA 22201

Patent No: 7,476,635 B2
Application No.: 10/667,654
Applicant: Christophe Chau, et al.
Issued: January 13, 2009
Title: **PROCESS FOR MAKING SUPPORTED THIN ZEOLITE MEMBRANE**

Request for Certificate of Correction:

Consideration has been given to your request for the issuance of a certificate of correction for the above- identified patent under the provisions of Rule 1.323.

A petition under C.F.R. 1.182 is required to correct the alleged errors in incorrect inventor's name or order of the inventor's names, since inventor's names are printed solely in accordance with the typed/printer names (not the signatures), and since unsigned declarations, non-initialed and non-dated changes are not taken into consideration. Therefore, no correction is in order here under the provisions of Rule 1.323, unless a petition is granted (*See M.P.E.P.605.04 b).*

In view of the foregoing, your request in this matter is hereby denied.

Any petition under 1.182 should be directed to the following address or facsimile number:

By mail: Mail Stop PETITIONS
Commissioner for Patents
Post Office Box 1450
Alexandria, VA 22313-1450

By hand: Customer Service Window

Mail Stop Petitions
Randolph Building
401 Dulany Street
Alexandria, VA 22314

By fax: (571) 273-0025
ATTN: Office of Petitions

/Virginia Tolbert/
Virginia Tolbert
For Mary Diggs, Supervisor
Decisions and Certificate of Correction
(571) 272-0460 (voice)
(571) 270-9892 (fax)

vt

UNITED STATES PATENT AND TRADEMARK OFFICE

Commissioner for Patents
United States Patent and Trademark Office
P.O. Box 1450
Alexandria, VA 22313-1450
www.uspto.gov

C. IRVIN MCCLELLAND
OBLON, SPIVAK, MCCLELLAND, MAIER & NEUSTADT, P.C.
1940 DUKE STREET
ALEXANDRIA VA 22314

COPY MAILED
OCT 2 6 2006
OFFICE OF PETITIONS

In re Application of	:	
Hiroshi Takei, et al.	:	
Application No. 10/667,671	:	DECISION GRANTING PETITION
Filed: September 23, 2003	:	UNDER 37 CFR 1.313(c)(2)
Attorney Docket No. 242831US0	:	

This is a decision on the petition under 37 CFR 1.313(c)(2), filed October 24, 2006, to withdraw the above-identified application from issue after payment of the issue fee.

The petition is **GRANTED**.

The above-identified application is withdrawn from issue for consideration of a submission under 37 CFR 1.114 (request for continued examination). *See* 37 CFR 1.313(c)(2).

Petitioner is advised that the issue fee paid on September 19, 2006 cannot be refunded. If, however, this application is again allowed, petitioner may request that it be applied towards the issue fee required by the new Notice of Allowance.[1]

Telephone inquiries should be directed to April Wise at (571) 272-1642.

This application is being referred to Technology Center AU 1712 for processing of the request for continued examination under 37 CFR 1.114 and for consideration of the concurrently filed information disclosure statement.

Frances Hicks
Frances M. Hicks
Petitions Examiner
Office of Petitions

---

[1] *The request to apply the issue fee to the new Notice may be satisfied by completing and returning the new Part B – Fee(s) Transmittal Form (along with any balance due at the time of submission). Petitioner is advised that the Issue Fee Transmittal Form* ***must*** *be completed and timely submitted to avoid abandonment of the application.*

UNITED STATES PATENT AND TRADEMARK OFFICE

Commissioner for Patents
United States Patent and Trademark Office
P.O. Box 1450
Alexandria, VA 22313-1450
www.uspto.gov

JOHN BARNEY
111 CAMBRIDGE DRIVE
MCMURRAY PA 15317

COPY MAILED

APR 30 2008

OFFICE OF PETITIONS

In re Application of	:	
John Barney	:	
Application No. 10/667,673	:	ON PETITION
Filed: September 22, 2003	:	
Attorney Docket No. 020614	:	

This is a decision on the petition under 37 CFR 1.137(b), filed August 8, 2007, to revive the above-identified application.

The petition under 37 CFR 1.137(b) is **GRANTED**.

The above-identified application became abandoned for failure to timely file a response to the non-final Office action mailed September 16, 2005. This Office action set a shortened statutory period for reply of three (3) months. No reply having been received, the application became abandoned on December 17, 2005. The Office mailed a Notice of Abandonment on March 24, 2006.

With the instant petition, applicant paid the petition fee, made the proper statement of unintentional delay, and submitted the required reply in the form of an Amendment.

It is not apparent whether the person signing the statement of unintentional delay was in a position to have firsthand or direct knowledge of the facts and circumstances of the delay at issue. Nevertheless, such statement is being treated as having been made as the result of a reasonable inquiry into the facts and circumstances of such delay. See 37 CFR 10.18(b) and Changes to Patent Practice and Procedure; Final Rule Notice, 62 Fed. Reg. 53131, 53178 (October 10, 1997), 1203 Off. Gaz. Pat. Office 63, 103 (October 21, 1997). In the event that such an inquiry has not been made, petitioner must make such an inquiry. If such inquiry results in the discovery that it is not correct that the entire delay in filing the required reply from the due date for the reply until the filing of a grantable petition pursuant to 37 CFR 1.137(b) was unintentional, petitioner must notify the Office.

The file does not indicate a change of address has been submitted, although the address given on the petition differs from the address of record. If appropriate, a change of address should be filed in accordance with MPEP 601.03. A courtesy copy of this decision is being mailed to the address given on the petition; however, the Office will mail all future correspondence solely to the address of record.

The matter is being forwarded to Group Art Unit 3654 for consideration of the Amendment filed August 8, 2007.

Telephone inquiries concerning this decision should be directed to the undersigned at (571)272-3207.

Cliff Congo
Petitions Attorney
Office of Petitions

cc: Roberto Capriotti
535 Smithfield Street
Pittsburgh, PA 15222-3212

UNITED STATES PATENT AND TRADEMARK OFFICE

Commissioner for Patents
United States Patent and Trademark Office
P.O. Box 1450
Alexandria, VA 22313-1450
www.uspto.gov

LEYDIG VOIT & MAYER, LTD
TWO PRUDENTIAL PLAZA, SUITE 4900
180 NORTH STETSON AVENUE
CHICAGO IL 60601-6731

COPY MAILED

JUL 23 2007

OFFICE OF PETITIONS

In re Application of

BOEHM, Garth
Application No. 10/667,676
Filed: September 22, 2003
Attorney Docket No. **224562**

DECISION ON PETITION
TO WITHDRAW
FROM RECORD

This is a decision on the Request to Withdraw as attorney or agent of record under 37 C.F.R. § 1.36(b), filed April 27, 2007 and May 23, 2007.

The request is **NOT APPROVED**.

A grantable request to withdraw as attorney/agent of record must be signed by every attorney/agent seeking to withdraw or contain a clear indication that one attorney is signing on behalf of another/others. A request to withdraw will not be approved unless at least 30 (thirty) days would remain between the date of approval and the later of the expiration date of a time to file a response or the expiration date of the maximum time period which can be extended under 37 C.F.R. § 1.136(a).

The request cannot be approved because no reasons for withdrawal have been provided. The Office cannot, at this time, determine whether practitioner's request is one of the mandatory or permissive reasons enumerated in 37 CFR 10.40. Any subsequent requests must include reasons for withdrawal. Please note that there is a space provided for on PTO/SB/83 (Request to Withdraw as Attorney or Agent) to supply practitioner's reasons.

All future communications from the Office will continue to be directed to the above-listed address until otherwise notified by applicant.

Telephone inquiries concerning this decision should be directed to Michelle R. Eason at 571-272- 4231.

Terri Williams

Terri Williams
Petitions Examiner
Office of Petitions

cc: **PATRICK HALLORAN, PH.D., J.D.**
3141 MUIRFIELD RD.
CENTER VALLEY, PA 18034

UNITED STATES PATENT AND TRADEMARK OFFICE

Commissioner for Patents
United States Patent and Trademark Office
P.O. Box 1450
Alexandria, VA 22313-1450
www.uspto.gov
DIW Feb-08

XIAOOHUA HUANG
P.O. BOX 9980
SAN JOSE CA 95157

COPY MAILED

FEB 07 2008

OFFICE OF PETITIONS

In re Application of	:	
Xioahua Huang	:	
Application Number: 10/667679	:	ON PETITION
Filing Date: 09/22/2003	:	
For: CAM CELLS FOR HIGH SPEED	:	
AND LOWER POWER CONTENT	:	
ADDRESSABLE MEMORY (CAM) AND	:	
TERNARY CONTENT ADDRESSABLE	:	
MEMORY (TCAM)	:	

This is a decision on the petition filed on January 14, 2008, under 37 CFR 1.137(a),[1] to revive the above-identified application.

The petition is **dismissed**.

Any request for reconsideration of this decision must be submitted within **TWO (2) MONTHS** from the mail date of this decision. Extensions of time under 37 CFR 1.136(a) are permitted. The reconsideration request should include a cover letter entitled "Renewed Petition under 37 CFR 1.137(a)" or

---

[1] A grantable petition under 37 CFR 1.137(a) must be accompanied by:

(1) the required reply, unless previously filed; In a nonprovisional application abandoned for failure to prosecute, the required reply may be met by the filing of a continuing application. In a nonprovisional utility or plant application filed on or after June 8, 1995, and abandoned for failure to prosecute, the required reply may also be met by the filing of a request for continued examination in compliance with § 1.114. In an application or patent, abandoned or lapsed for failure to pay the issue fee or any portion thereof, the required reply must be the payment of the issue fee or any outstanding balance thereof. In an application, abandoned for failure to pay the publication fee, the required reply must include payment of the publication fee.

(2) the petition fee as set forth in 37 CFR 1.17(l);

(3) a showing to the satisfaction of the Commissioner that the entire delay in filing the required reply from the due date for the reply until the filing of a grantable petition pursuant to 37 CFR 1.137(a) was unavoidable; and

(4) any terminal disclaimer (and fee as set forth in 37 CFR 1.20(d)) required pursuant to 37 CFR 1.137(c)).

"Renewed Petition to withdraw the holding of abandonment," or as discussed below "Renewed Petition under 37 CFR 1.137(b)."

The application became abandoned on June 4, 2005, for failure to timely file a response to the Office action requiring restriction and/or election mailed on May 3, 2005, which set a one (1) month shortened statutory period for reply. On July 2, 2005, an untimely amendment in response to the restriction requirement was filed. Notice of Abandonment was mailed on February 16, 2006.

The Director may revive an abandoned application if the delay in responding to the relevant outstanding Office requirement is shown to the satisfaction of the Director to be "unavoidable".[2] Decisions on reviving abandoned applications on the basis of "unavoidable" delay have adopted the reasonably prudent person standard in determining if the delay was unavoidable:

> The word 'unavoidable' . . . is applicable to ordinary human affairs, and requires no more or greater care or diligence than is generally used and observed by prudent and careful men in relation to their most important business. It permits them in the exercise of this care to rely upon the ordinary and trustworthy agencies of mail and telegraph, worthy and reliable employees, and such other means and instrumentalities as are usually employed in such important business. If unexpectedly, or through the unforeseen fault or imperfection of these agencies and instrumentalities, there occurs a failure, it may properly be said to be unavoidable, all other conditions of promptness in its rectification being present.[3]

The showing of record is inadequate to establish unavoidable delay within the meaning of 35 U.S.C. § 133 and 37 CFR 1.137(a).[5] Specifically, an application is "unavoidably" abandoned only where petitioner, or counsel for petitioner, takes all action

---

[2] 35 U.S.C. § 133.

[3] In re Mattullath, 38 App. D.C. 497, 514-15 (1912)(quoting Ex parte Pratt, 1887 Dec. Comm'r Pat. 31, 32-33 (1887)); see also Winkler v. Ladd, 221 F. Supp. 550, 552, 138 USPQ 666, 167-68 (D.D.C. 1963), aff'd, 143 USPQ 172 (D.C. Cir. 1963); Ex parte Henrich, 1913 Dec. Comm'r Pat. 139, 141 (1913). In addition, decisions on revival are made on a "case-by-case basis, taking all the facts and circumstances into account." Smith v. Mossinghoff, 671 F.2d 533, 538, 213 USPQ 977, 982 (D.C. Cir. 1982). Finally, a petition cannot be granted where a petitioner has failed to meet his or her burden of establishing that the delay was "unavoidable." Haines v. Quigg, 673 F. Supp. 314, 316-17, 5 USPQ2d 1130, 1131-32 (N.D. Ind. 1987).

necessary for a proper response to the outstanding Office action, but through the intervention of unforeseen circumstances, such as failure of mail, telegraph, facsimile, or the negligence of otherwise reliable employees, the response is not timely received in the Office.[4]

Petitioner states, in pertinent part:

> Since we moved, address change, and received the letter mailed out from PTO on May 3, 2005. lately and I responded in June 16, 2005. Then in 2/16/2006, PTO office mailed out abandoned letter. Since 08/2005, I have been in deep depresion (*sic*) and most time stay in Hospital, and not allowed to work until recently. I am able to read and learned that this patent was abandoned.

Petitioner has included a letter from Dr. Joseph Weintraub, Diplomate of the American Board of Psychiatry, stating that he has been treating Mr. Huang for several years for depression, at times severe. Dr. Weintraub's letter further states that "During the past year [Mr. Huang] has mostly been unable to work because of severe depression."

The showing of record, for the entire period of abandonment, does not rise to the level of unavoidable delay. While physical or mental incapacitation can be a cause of delay, a showing of "unavoidable" delay based upon incapacitation must establish, at the outset, that petitioner's incapacitation was of such a nature and degree as to render petitioner unable to conduct business (*e.g.*, correspond with the Office) during the period between June 4, 2005 and January 14, 2008. Simply put, unavoidable delay must be shown for the entire period between when the date when a reply was due and the date when the petition to revive was filed. Such a showing must be supported by a statement from the petitioner's treating physician, and such statement must provide the nature of petitioner's incapacitation during the above-mentioned period.

At the outset, it is noted that the petition states that petitioner's depression began in August, 2005. The application became abandoned, however, on June 4, 2005. Petitioner must explain why the entire delay in filing a proper response was unavoidable.

---

[4] Ex parte Pratt, 1887 Dec. Comm'r Pat. 31 (Comm'r Pat. 1887).

Further, while petitioner has provided a statement from his physician, the statement appears to be dated "10-9-07," and would therefore cover only the period from October 9, 2006, through October 9, 2007. As petitioner must show that the entire period of delay, as stated above, was unavoidable, the statement provided is insufficient to show unavoidable delay from June 4, 2005, the date the application became abandoned, until January 14, 2008, the date a petition under 37 CFR 1.137(a) was filed. If petitioner was incapacitated for a longer period, petitioner may wish to provide a more detailed statement stating the period of incapacitation. If the delay was unavoidable due to other reasons, any renewed petition must explain why the delay was unavoidable.

In summary, the showing of record is insufficient to establish unavoidable delay within the meaning of 35 U.S.C. § 133 and 37 CFR 1.137(a). As petitioner has not shown that he exercised the standard of care observed by a reasonable person in the conduct of his or her most important business, the petition will be dismissed.[5]

ALTERNATIVE VENUE

Petitioner may wish to consider filing a renewed petition under 37 CFR 1.137(b), which now provides that where the delay in reply was unintentional, a petition may be filed to revive an abandoned application or a lapsed patent pursuant to 37 CFR 1.137(b). A grantable petition pursuant to 37 CFR 1.137(b) must be accompanied by:

(1) the required reply, unless previously filed. In a nonprovisional application abandoned for failure to prosecute, the required reply may be met by the filing of a continuing application. In a nonprovisional utility or plant application filed on or after 8 June, 1995, and abandoned for failure to prosecute, the required reply may also be met by the filing of a request for continued examination in compliance with § 1.114. In an application or patent, abandoned or lapsed for failure to pay the issue fee or any portion thereof, the required reply must be the payment of the issue fee or any outstanding balance thereof. In an application, abandoned for failure to pay the publication fee, the required reply must include payment of the publication fee.

(2) the petition fee as set forth in 37 CFR 1.17(m);

---

[5] See note 7, supra.

(3) a statement that the entire delay in filing the required reply from the due date for the reply until the filing of a grantable petition pursuant to 37 CFR 1.137(b) was unintentional. The Commissioner may required additional information where there is a question whether the delay was unintentional; and

(4) any terminal disclaimer (and fee as set forth in 37 CFR 1.20(d)) required pursuant to 37 CFR 1.137(c)).

The filing of a petition under the unintentional standard cannot be intentionally delayed and therefore should be filed promptly. A person seeking revival due to unintentional delay cannot make a statement that the delay was unintentional unless the entire delay, including the delay from the date it was discovered that the application was abandoned until the filing of the petition to revive under 37 CFR 1.137(b), was unintentional. A statement that the delay was unintentional is not appropriate if petitioner intentionally delayed the filing of a petition for revival under 37 CFR 1.137(b).

Should petitioner decide to file a petition under 37 CFR 1.137(b), the additional petition fee due would be $770.00 for a small entity.

A copy of the form for filing a petition under 37 CFR 1.137(b) to revive an application unintentionally abandoned is enclosed herewith for petitioner's convenience.

Further correspondence with respect to this matter should be addressed as follows:

By mail: Mail Stop Petition
Commissioner for Patents
P.O. Box 1450
Alexandria, VA 22313-1450

By FAX: (571) 273-8300
Attn: Office of Petitions

By hand: Customer Service Window
Mail Stop Petition
Randolph Building
401 Dulany Street
Alexandria, VA 22314

Telephone inquiries concerning this matter may be directed to the undersigned at (571) 272-3231.

D Wood

Douglas I. Wood
Senior Petitions Attorney
Office of Petitions

Enclosure: Form PTO/SB/64

PTO/SB/64 (01-08)
Approved for use through 02/29/2008. OMB 0651-0031
U.S. Patent and Trademark Office; U.S. DEPARTMENT OF COMMERCE
Under the Paperwork Reduction Act of 1995, no persons are required to respond to a collection of information unless it displays a valid OMB control number.

PETITION FOR REVIVAL OF AN APPLICATION FOR PATENT ABANDONED UNINTENTIONALLY UNDER 37 CFR 1.137(b)

Docket Number (Optional)

First named inventor:

Application No.: Art Unit:

Filed: Examiner:

Title:

Attention: Office of Petitions
Mail Stop Petition
Commissioner for Patents
P.O. Box 1450
Alexandria, VA 22313-1450
FAX (571) 273-8300

NOTE: If information or assistance is needed in completing this form, please contact Petitions Information at (571) 272-3282.

The above-identified application became abandoned for failure to file a timely and proper reply to a notice or action by the United States Patent and Trademark Office. The date of abandonment is the day after the expiration date of the period set for reply in the office notice or action plus an extensions of time actually obtained.

APPLICANT HEREBY PETITIONS FOR REVIVAL OF THIS APPLICATION

NOTE: A grantable petition requires the following items:
(1) Petition fee;
(2) Reply and/or issue fee;
(3) Terminal disclaimer with disclaimer fee - required for all utility and plant applications filed before June 8, 1995; and for all design applications; and
(4) Statement that the entire delay was unintentional.

1. Petition fee

☐ Small entity-fee $ _____ (37 CFR 1.17(m)). Applicant claims small entity status. See 37 CFR 1.27.

☐ Other than small entity – fee $ _____ (37 CFR 1.17(m))

2. Reply and/or fee

A. The reply and/or fee to the above-noted Office action in the form of _____(identify type of reply):

☐ has been filed previously on _____.
☐ is enclosed herewith.

B. The issue fee and publication fee (if applicable) of $ _____.

☐ has been paid previously on _____.
☐ is enclosed herewith.

This collection of information is required by 37 CFR 1.137(b). The information is required to obtain or retain a benefit by the public which is to file (and by the USPTO to process) an application. Confidentiality is governed by 35 U.S.C. 122 and 37 CFR 1.11 and 1.14. This collection is estimated to take 1.0 hour to complete, including gathering, preparing, and submitting the completed application form to the USPTO. Time will vary depending upon the individual case. Any comments on the amount of time you require to complete this form and/or suggestions for reducing this burden, should be sent to the Chief Information Officer, U.S. Patent and Trademark Office, U.S. Department of Commerce, P.O. Box 1450, Alexandria, VA 22313-1450. DO NOT SEND FEES OR COMPLETED FORMS TO THIS ADDRESS. **SEND TO: Mail Stop Petition, Commissioner for Patents, P.O. Box 1450, Alexandria, VA 22313-1450.**

If you need assistance in completing the form, call 1-800-PTO-9199 and select option 2.

Under the Paperwork Reduction Act of 1995, no persons are required to respond to a collection of information unless it displays a valid OMB control number.

3. Terminal disclaimer with disclaimer fee

☐ Since this utility/plant application was filed on or after June 8, 1995, no terminal disclaimer is required.

☐ A terminal disclaimer (and disclaimer fee (37 CFR 1.20(d)) of $ _____ for a small entity or $ _____ for other than a small entity) disclaiming the required period of time is enclosed herewith (see PTO/SB/63).

4. STATEMENT: The entire delay in filing the required reply from the due date for the required reply until the filing of a grantable petition under 37 CFR 1.137(b) was unintentional. [NOTE: The United States Patent and Trademark Office may require additional information if there is a question as to whether either the abandonment or the delay in filing a petition under 37 CFR 1.137(b) was unintentional (MPEP 711.03(c), subsections (III)(C) and (D)).]

WARNING:

Petitioner/applicant is cautioned to avoid submitting personal information in documents filed in a patent application that may contribute to identity theft. Personal information such as social security numbers, bank account numbers, or credit card numbers (other than a check or credit card authorization form PTO-2038 submitted for payment purposes) is never required by the USPTO to support a petition or an application. If this type of personal information is included in documents submitted to the USPTO, petitioners/applicants should consider redacting such personal information from the documents before submitting them to the USPTO. Petitioner/applicant is advised that the record of a patent application is available to the public after publication of the application (unless a non-publication request in compliance with 37 CFR 1.213(a) is made in the application) or issuance of a patent. Furthermore, the record from an abandoned application may also be available to the public if the application is referenced in a published application or an issued patent (see 37 CFR 1.14). Checks and credit card authorization forms PTO-2038 submitted for payment purposes are not retained in the application file and therefore are not publicly available.

Signature	Date
Typed or printed name	Registration Number, if applicable
Address	Telephone Number
Address	

Enclosures:
- ☐ Fee Payment
- ☐ Reply
- ☐ Terminal Disclaimer Form
- ☐ Additional sheets containing statements establishing unintentional delay
- ☐ Other: _____

CERTIFICATE OF MAILING OR TRANSMISSION [37 CFR 1.8(a)]

I hereby certify that this correspondence is being:

☐ Deposited with the United States Postal Service on the date shown below with sufficient postage as first class mail in an envelope addressed to: Mail Stop Petition, Commissioner for Patents, P. O. Box 1450, Alexandria, VA 22313-1450.

☐ Transmitted by facsimile on the date shown below to the United States Patent and Trademark Office at (571) 273-8300.

Date	Signature
	Typed or printed name of person signing certificate

Privacy Act Statement

The **Privacy Act of 1974 (P.L. 93-579)** requires that you be given certain information in connection with your submission of the attached form related to a patent application or patent. Accordingly, pursuant to the requirements of the Act, please be advised that: (1) the general authority for the collection of this information is 35 U.S.C. 2(b)(2); (2) furnishing of the information solicited is voluntary; and (3) the principal purpose for which the information is used by the U.S. Patent and Trademark Office is to process and/or examine your submission related to a patent application or patent. If you do not furnish the requested information, the U.S. Patent and Trademark Office may not be able to process and/or examine your submission, which may result in termination of proceedings or abandonment of the application or expiration of the patent.

The information provided by you in this form will be subject to the following routine uses:

1. The information on this form will be treated confidentially to the extent allowed under the Freedom of Information Act (5 U.S.C. 552) and the Privacy Act (5 U.S.C 552a). Records from this system of records may be disclosed to the Department of Justice to determine whether disclosure of these records is required by the Freedom of Information Act.
2. A record from this system of records may be disclosed, as a routine use, in the course of presenting evidence to a court, magistrate, or administrative tribunal, including disclosures to opposing counsel in the course of settlement negotiations.
3. A record in this system of records may be disclosed, as a routine use, to a Member of Congress submitting a request involving an individual, to whom the record pertains, when the individual has requested assistance from the Member with respect to the subject matter of the record.
4. A record in this system of records may be disclosed, as a routine use, to a contractor of the Agency having need for the information in order to perform a contract. Recipients of information shall be required to comply with the requirements of the Privacy Act of 1974, as amended, pursuant to 5 U.S.C. 552a(m).
5. A record related to an International Application filed under the Patent Cooperation Treaty in this system of records may be disclosed, as a routine use, to the International Bureau of the World Intellectual Property Organization, pursuant to the Patent Cooperation Treaty.
6. A record in this system of records may be disclosed, as a routine use, to another federal agency for purposes of National Security review (35 U.S.C. 181) and for review pursuant to the Atomic Energy Act (42 U.S.C. 218(c)).
7. A record from this system of records may be disclosed, as a routine use, to the Administrator, General Services, or his/her designee, during an inspection of records conducted by GSA as part of that agency's responsibility to recommend improvements in records management practices and programs, under authority of 44 U.S.C. 2904 and 2906. Such disclosure shall be made in accordance with the GSA regulations governing inspection of records for this purpose, and any other relevant (*i.e.*, GSA or Commerce) directive. Such disclosure shall not be used to make determinations about individuals.
8. A record from this system of records may be disclosed, as a routine use, to the public after either publication of the application pursuant to 35 U.S.C. 122(b) or issuance of a patent pursuant to 35 U.S.C. 151. Further, a record may be disclosed, subject to the limitations of 37 CFR 1.14, as a routine use, to the public if the record was filed in an application which became abandoned or in which the proceedings were terminated and which application is referenced by either a published application, an application open to public inspection or an issued patent.
9. A record from this system of records may be disclosed, as a routine use, to a Federal, State, or local law enforcement agency, if the USPTO becomes aware of a violation or potential violation of law or regulation.

SPE RESPONSE FOR CERTIFICATE OF CORRECTION

Paper No.:20050630

DATE : June 30, 2005

TO SPE OF : ART UNIT 1774

SUBJECT : Request for Certificate of Correction on Patent No.: 6,794,006

A response is requested with respect to the accompanying request for a certificate of correction.

Please complete this form and return with file, within **7** days to:
Certificates of Correction Branch - PK 3-910
Palm location **7590** - Tel. No. 305-8201

With respect to the change(s) requested, correcting Office and/or Applicant's errors, should the patent read as shown in the certificate of correction? No new matter should be introduced, nor should the scope or meaning of the claims be changed.

Thank You For Your Assistance **Certificates of Correction Branch**

The request for issuing the above-identified correction(s) is hereby:
Note your decision on the appropriate box.

☒ **Approved** **All** changes apply.

☐ **Approved in Part** Specify below which changes **do not** apply.

☐ **Denied** State the reasons for denial below.

Comments:

SPE: Rena Dye **Art Unit** 1774

UNITED STATES PATENT AND TRADEMARK OFFICE

UNITED STATES DEPARTMENT OF COMMERCE
United States Patent and Trademark Office
Address: COMMISSIONER FOR PATENTS
P.O. Box 1450
Alexandria, Virginia 22313-1450
www.uspto.gov

PHILIP S. JOHNSON
JOHNSON & JOHNSON
ONE JOHNSON & JOHNSON PLAZA
NEW BRUNSWICK, NJ 08933-7003

Mail Date: 04/20/2010

Applicant	: Mark A. Heldreth	: DECISION ON REQUEST FOR
Patent Number	: 7632283	: RECALCULATION of PATENT
Issue Date	: 12/15/2009	: TERM ADJUSTMENT IN VIEW
Appliction No	: 10/667,685	: OF WYETH AND NOTICE OF INTENT TO
Filed	: 09/22/2003	: ISSUE CERTIFICATE OF CORRECTION
		:

The Request for Recalculation is **GRANTED** to the extent indicated.

The patent term adjustment has been determined to be **611** days. The USPTO will *sua sponte* issue a certificate of correction reflecting the amount of PTA days determined by the recalculation.

Prior to the issuance of the certificate of correction, the USPTO will afford patentee an opportunity to be heard and request reconsideration. Accordingly, patentee has **one month or thirty (30) days**, whichever is longer, to file a request for reconsideration of this patent term adjustment calculation. See 35 U.S.C. 154(b)(3)(B)(ii) and 37 CFR 1.322(a)(4). No extensions of time will be granted under 37 CFR 1.136.

Patentee should use document code PET.OP if electronically filing a request for reconsideration of this patent term adjustment calculation. The patentee must also include the information required by 37 CFR 1.705(b)(2) and the fee required by 37 CFR 1.18(e). If patentee does not file a timely request for reconsideration of this patent term adjustment calculation including the information required by 37 CFR 1.705(b)(2) and the fee required by 37 CFR 1.18(e), the USPTO will issue a certificate of correction reflecting the PTA determination noted above.

Patentee should be aware that in order to preserve the right to review in the United States District Court for the District of Columbia of the USPTO patent term adjustment determination, patentee must ensure that he or she also take the steps required under 35 U.S.C. 154(b)(4)(A) in a timely manner. Nothing in the request for recalculation should be construed as providing an alternative time frame for commencing a civil action under 35 U.S.C. 154(b)(4)(A).

Any questions concerning this decision should be directed to the Office of Patent Legal Administration at 571-272-7702.

UNITED STATES PATENT AND TRADEMARK OFFICE

Commissioner for Patents
United States Patent and Trademark Office
P.O. Box 1450
Alexandria, VA 22313-1450
www.uspto.gov

Timothy B. Scull
Merchant & Gould P.C.
P.O. Box 2903
Minneapolis, MN 55402-0903

MAILED

DEC 21 2007

TECHNOLOGY CENTER 2100

In re Application of:
Javier F. Delgado et al
Appl. No.: 10/667,688
Filed: September 22, 2003
For: Method and System For Distributing and Installing Software

DECISION ON PETITION
UNDER 37 CFR § 1.59

This is a decision on petitions under 37 CFR § 1.59(b), filed on October 22, 2007, to expunge information submitted pursuant to MPEP § 724.05.

The petitions are **DISMISSED**.

Petitioner requests that the information submitted on October 22, 2007 be expunged from the record if found not to be important to a reasonable examiner in deciding whether to allow the application to issue as a patent. The petition fee set forth in 37 CFR § 1.17(g) has been paid.

The petition is premature because the application has not been allowed or abandoned. Accordingly, it is not appropriate to make a final determination of whether or not the material requested to be expunged is "material," with "materiality" being defined as any information which the examiner considers as being important to a determination of patentability of the claims. Thus, the petition to expunge must be dismissed at this time.

During prosecution on the merits, the examiner will determine whether or not the information submitted on October 22, 2007considered to be "material." Once prosecution on the merits is closed, applicant may re-submit petitions to expunge the information. No further fee is required for such a second submission of a petition under 37 CFR § 1.59 to expunge information. If the information is not considered by the examiner to be material, the information will be expunged from the application and may be returned to applicant.

The identified documents are currently not available for public view.

Any inquiry concerning this decision should be directed to the undersigned whose telephone number is (571) 272-3591

/Gail Hayes/
Gail Hayes, SPRE/QAS
Technology Center 2100
Computer Architecture, Software, and
Information Security

UNITED STATES PATENT AND TRADEMARK OFFICE

Commissioner for Patents
United States Patent and Trademark Office
P.O. Box 1450
Alexandria, VA 22313-1450
www.uspto.gov

MAILED

SEP 23 2009

Technology Center 2100

Timothy B. Scull
Merchant & Gould P. C.
P.O. Box 2903
Minneapolis, MN 55402-0903

In re Application of:
Javier F. Delgado et al
Appl. No.: 10/667688
Filed: September 22, 2003
Docket No: MS302387.1/6001.268US01
For: METHOD AND SYSTEM FOR DISTRIBUTING AND INSTALLING SOFTWARE

DECISION ON PETITION UNDER 37 CFR § 1.59

This is a decision on a petition under 37 CFR § 1.59(b), filed on October 22, 2007 to expunge information submitted pursuant to MPEP § 724.05.

The petition is **GRANTED**.

Petitioner requests that the Information Disclosure Statement filed October 22, 2007, be expunged from the record. Petitioner states that either (A) that the information contains trade secret material, proprietary material and/or material that is subject to a protective order which has not been made public; or (B) that the information submitted was unintentionally submitted and the failure to obtain its return would cause irreparable harm to the party who submitted the information or to the party in interest on whose behalf the information was submitted, and the information has not otherwise been made public. The petition fee set forth in 37 CFR 1.17(g) has been paid.

As noted in MPEP 724.04:

> With the mailing of the notice of abandonment, if a petition to expunge has been filed, irrespective of whether the materials are found to be material to patentability, the petition to expunge will be granted and the materials expunged

A decision dismissing the petition as premature was mailed on December 21, 2007. However, no final decision accompanied the Notice of Abandonment mailed July 14, 2008. Therefore, this decision is now being mailed to complete the record.

It should be noted that no determination of materiality has been made regarding the submitted material and that the IDS has not been made available to the public by the Office.

Applicant is required to retain the expunged material(s) for the life of any patent which issues on the above-identified application.

The expunged material has been removed from the official file.

Any inquiry concerning this decision should be directed to the undersigned whose telephone number is (571) 272-3591

/Gail Hayes/

Gail Hayes, SPRE/QAS
Technology Center 2100
Computer Architecture, Software, and
Information Security

UNITED STATES PATENT AND TRADEMARK OFFICE

UNITED STATES DEPARTMENT OF COMMERCE
United States Patent and Trademark Office
Address: COMMISSIONER FOR PATENTS
P.O. Box 1450
Alexandria, Virginia 22313-1450
www.uspto.gov

APPLICATION NO.	FILING DATE	FIRST NAMED INVENTOR	ATTORNEY DOCKET NO.	CONFIRMATION NO.
10/667,688	09/22/2003	Javier F. Delgado	MS302387.1/6001.268US01	9384

7590 09/23/2009

Homer Knearl
Merchant & Gould P.C.
P.O. Box 2903
Minneapolis, MN 55402-0903

EXAMINER
KANG, INSUN

ART UNIT	PAPER NUMBER
2193	

MAIL DATE	DELIVERY MODE
09/23/2009	PAPER

Please find below and/or attached an Office communication concerning this application or proceeding.

The time period for reply, if any, is set in the attached communication.

UNITED STATES PATENT AND TRADEMARK OFFICE

UNITED STATES DEPARTMENT OF COMMERCE
United States Patent and Trademark Office
Address: COMMISSIONER FOR PATENTS
P.O. Box 1450
Alexandria, Virginia 22313-1450
www.uspto.gov

APPLICATION NO.	FILING DATE	FIRST NAMED INVENTOR	ATTORNEY DOCKET NO.	CONFIRMATION NO.
10/667,690	09/22/2003	Andrew Doddington	14846-15	9387

7590 04/26/2010
MICHAEL B. JOHANNESEN, ESQ.
LOWENSTEIN SANDLER, P.C.
65 LIVINGSTON AVENUE
ROSELAND, NJ 07068

EXAMINER
LOVEL, KIMBERLY M

ART UNIT	PAPER NUMBER
2167	

MAIL DATE	DELIVERY MODE
04/26/2010	PAPER

Please find below and/or attached an Office communication concerning this application or proceeding.

The time period for reply, if any, is set in the attached communication.

UNITED STATES PATENT AND TRADEMARK OFFICE

COMMISSIONER FOR PATENTS
UNITED STATES PATENT AND TRADEMARK OFFICE
P.O. BOX 1450
ALEXANDRIA, VA 22313-1450
www.uspto.gov

Michael B. Johannesen, Esq.
LOWENSTEIN SANDLER P.C.
65 Livingston Avenue
Roseland, NJ 07068

In re Application of:
A. DODDINGTON
Application No. 10/667,690
Filed: September 22, 2003
For: SYSTEMS AND METHODS FOR DECOUPLING DATA PRESENTATION LAYER AND DATA GATHERING AND STOARAGE LAYER IN A DISTRIBUTED DATA PROCESSING SYSTEM

DECISION ON PETITION TO MAKE SPECIAL

This is a decision on the petition, filed on 22 September 2003, under 37 C.F.R. §102(d) and M.P.E.P. § 708.02(VIII): Accelerated Examination, to make the above-identified application special.

The petition is **GRANTED**.

M.P.E.P. § 708.02, Section VIII which sets out the prerequisites for a grantable petition for Accelerated Examination under 37 C.F.R. § 102(d) states in relevant part:

> A new application (one which has not received any examination by the examiner) may be granted special status provided that applicant (and this term includes applicant's attorney or agent) complies with each of the following items:
>
> (A) Submits a petition to make special accompanied by the fee set forth in 37 CFR 1.17(h);
>
> (B) Presents all claims directed to a single invention, or if the Office determines that all the claims presented are not obviously directed to a single invention, will make an election without traverse as a prerequisite to the grant of special status;
>
> (C) Submits a statement(s) that a pre-examination search was made, listing the field of search by class and subclass, publication, Chemical Abstracts, foreign patents, etc. A search made by a foreign patent office satisfies this requirement;
>
> (D) Submits one copy each of the references deemed most closely related to the subject matter encompassed by the claims if said references are not already of record; and
>
> (E) Submits a detailed discussion of the references, which discussion points out, with the particularity required by 37 CFR 1.111 (b) and (c), how the claimed subject matter is patentable over the references.

Applicant's submission of 22 September 2003 meets all the criteria set out above. Accordingly, the petition is **GRANTED**. The application file is being recorded for accelerated examination in accordance with M.P.E.P. § 708.02. If the application is subsequently allowed, it will be given priority for printing. See M.P.E.P. § 1309.

/Vincent N. Trans/
Vincent N. Trans, SPRE/QAS
Technology Center 2100
Computer Architecture and Software
571-272-3613

UNITED STATES PATENT AND TRADEMARK OFFICE

Commissioner for Patents
United States Patent and Trademark Office
P.O. Box 1450
Alexandria, VA 22313-1450
www.uspto.gov

LAW OFFICE OF DONALD L.
WENSKAY
P.O. Box 7206
Ranco Santa Fe CA 92067

COPY MAILED

DEC 1 4 2007

OFFICE OF PETITIONS

In re Application of	:	
Meada et al.	:	
Application No. 10/667712	:	
Filing or 371(c) Date: 09/22/2003	:	ON PETITION
Attorney Docket Number:	:	
JP920020148US1	:	

This is a decision on the petition to revive the application under the unintentional provisions of 37 CFR 1.137(b), filed November 17, 2007.

This Petition is hereby **granted**.

The above-identified application became abandoned for failure to timely and properly reply to the non-final Office action, mailed March 15, 2006. The Office action set a three (3) month period for reply from the mail date of the Office action. Extensions of time were available under 37 CFR 1.136(a). No reply having been received, the application became abandoned on June 16, 2006. A Notice of Abandonment was mailed January 18, 2007.

Applicant files the present petition and includes an Amendment in response to the Office action. The petition satisfies the conditions for revival pursuant to the provisions of 37 CFR 1.137(b) in that the petition includes (1) the reply; (2) the petition fee; and (3) the required statement of unintentional delay. Accordingly, the reply is accepted as having been unintentionally delayed.

The application is being referred to Technology Center Art Unit 2161 for processing of the Amendment/reply filed with the petition in due course.

Telephone inquiries concerning this decision should be directed to the undersigned at (571) 272-3232.

Derek L. Woods
Attorney
Office of Petitions

UNITED STATES PATENT AND TRADEMARK OFFICE

Commissioner for Patents
United States Patent and Trademark Office
P.O. Box 1450
Alexandria, VA 22313-1450
www.uspto.gov

FARRIS LAW PC
5291 COLONY DRIVE NORTH
SAGINAW MI 48638

COPY MAILED

AUG 06 2007

OFFICE OF PETITIONS

In re Application of	:	
Philip C. Backus	:	
Application No. 10/667,731	:	ON PETITION
Filed: September 22, 2003	:	
Attorney Docket No. 7239.3001.001	:	

This is a decision on the petition to withdraw the holding of abandonment under 37 CFR 1.181, filed July 7, 2007.

The petition is **GRANTED**.

This application was held abandoned for failure to timely file a response to the Notice of Non-Compliant Amendment mailed July 19, 2006. This Office action set an extendable period for reply of one (1) month. No reply having been received, the application became abandoned on August 20, 2006. A Notice of Abandonment was mailed on February 8, 2007.

Petitioner contends that he did timely file a reply on July 28, 2006. Petitioner explains that the reply was accidentally filed in application no. 10/667,371, not 10/667,731. A review of application no. 10/667,731

As set forth in the Manual of Patent Examining Procedure § 724.05:

> Where the Office can determine the correct application file that the papers were actually intended for, based on identifying information in the heading of the papers (e.g. application number, filing date, title of invention and inventor(s) name(s)), the Office will transfer the papers to the correct application file for which they were intended without the need of a petition.

Here, apart from the application number, the response did contain the correct identifying information (specifically the attorney docket number, the title of invention, the inventor, the filing date, and Examiner's name). Accordingly, it is concluded that the Office could have determined the correct application file for which the response was intended.

In view thereof, **THE HOLDING OF ABANDONMENT IS WITHDRAWN.**

The matter is being forwarded to Group Art Unit 3782 for consideration of the amendment filed July 28, 2006 (copy supplied with the instant petition).

Telephone inquiries regarding this decision should be directed to the undersigned at (571)272-3207.

Cliff Congo
Petitions Attorney
Office of Petitions

UNITED STATES PATENT AND TRADEMARK OFFICE

Commissioner for Patents
United States Patent and Trademark Office
P.O. Box 1450
Alexandria, VA 22313-1450
www.uspto.gov

ROBERT E STRAUSS
80519 DUNBAR DRIVE
INDIO CA 92201

COPY MAILED
AUG 1 8 2006
OFFICE OF PETITIONS

In re Application of	:	
Stevenson, et al.	:	
Application No. 10/667,746	:	ON PETITION
Filed: September 22, 2003	:	
Attorney Docket No. STEV-110C	:	

This is a decision on the petition to revive an abandoned application under 37 CFR 1.137(b), filed December 22, 2005.

The petition under 37 CFR 1.137(b) is **GRANTED**.

The above-identified application became abandoned for failure to timely file a response to the non-final Office action mailed April 1, 2005, which set a shortened statutory period for reply of three (3) months. No extensions of time under 37 CFR 1.136(a) were purchased. Accordingly, no reply having received, the application became abandoned on July 2, 2005. The mailing of this decision precedes the mailing of a Notice of Abandonment.

With the instant petition, petitioner paid the petition fee, submitted the required reply in the form of an Amendment, and made the proper statement of unintentional delay.

The matter is being forwarded to Group Art Unit 1762 for consideration of the Amendment filed December 22, 2005.

Telephone inquiries related to this decision should be directed to the undersigned at (571)272-3207.

Cliff Congo
Petitions Attorney
Office of Petitions

IFW DAC

UNITED STATES PATENT AND TRADEMARK OFFICE

Commissioner for Patents
United States Patent and Trademark Office
P.O. Box 1450
Alexandria, VA 22313-1450
www.uspto.gov

OIPE IAP96
AUG 21 2006
PATENT & TRADEMARK OFFICE

ROBERT E STRAUSS
80519 DUNBAR DRIVE
INDIO CA 92201

COPY MAILED
AUG 18 2006
OFFICE OF PETITIONS

In re Application of	:	
Stevenson, et al.	:	
Application No. 10/667,746	:	ON PETITION
Filed: September 22, 2003	:	
Attorney Docket No. STEV-110C	:	

This is a decision on the petition to revive an abandoned application under 37 CFR 1.137(b), filed December 22, 2005.

The petition under 37 CFR 1.137(b) is **GRANTED**.

The above-identified application became abandoned for failure to timely file a response to the non-final Office action mailed April 1, 2005, which set a shortened statutory period for reply of three (3) months. No extensions of time under 37 CFR 1.136(a) were purchased. Accordingly, no reply having received, the application became abandoned on July 2, 2005. The mailing of this decision precedes the mailing of a Notice of Abandonment.

With the instant petition, petitioner paid the petition fee, submitted the required reply in the form of an Amendment, and made the proper statement of unintentional delay.

The matter is being forwarded to Group Art Unit 1762 for consideration of the Amendment filed December 22, 2005.

Telephone inquiries related to this decision should be directed to the undersigned at (571)272-3207.

Cliff Congo
Petitions Attorney
Office of Petitions

UNITED STATES DEPARTMENT OF COMMERCE
Patent and Trademark Office
ASSISTANT SECRETARY OF COMMERCE AND
COMMISSIONER OF PATENTS AND TRADEMARKS
P.O. BOX 1450
Alexandria, VA 22313-1450

April 19, 2006

Patent No.: 7,011,642 B2
Applicant : Michael T. Greene, et al.
Issued : March 14, 2006
For : **EXTERNAL FIXATION DEVICE FOR CRANIALMAXILLOFACIAL DISTRACTION**

Re: Request for Certificate of Correction

Consideration has been given your request for the issuance of a certificate of correction under the provisions of Rule 1.322.

The inventors' names are printed in accordance with the typed names on the Declaration filed January 16, 2004, therefore the error was the result of applicants' failure to comply with the requirement that the correct names be indicated on the Declaration or Oath. No correction is in order here under the provisions of Rule 1.322.

In view of the foregoing, your request is hereby denied. However, further consideration will be given your request, upon receipt of a request under the provisions of Rule 1.323. accompanying the appropriate fee of $100.

Further correspondence concerning this matter should be filed and directed to:

U.S. Department of Commerce
Patent & Trademark Office
Washington, D.C. 20231
Attn: Certificate of Corrections Branch

For Cecelia Newman
Decisions & Certificates
of Correction Branch
703-308-9390 ext. 111

Thomas C. Saitta/Roger Towers, P.A.
1301 Riverplace Boulevard – Suite 1500
Jacksonville, FL 32207

UNITED STATES PATENT AND TRADEMARK OFFICE

UNITED STATES DEPARTMENT OF COMMERCE
United States Patent and Trademark Office
Address: COMMISSIONER FOR PATENTS
P.O. Box 1450
Alexandria, Virginia 22313-1450
www.uspto.gov

PHILIP S. JOHNSON
JOHNSON & JOHNSON
ONE JOHNSON & JOHNSON PLAZA
NEW BRUNSWICK, NJ 08933-7003

Mail Date: 04/20/2010

Applicant	: Ray C. Wasielewski	: DECISION ON REQUEST FOR
Patent Number	: 7591854	: RECALCULATION of PATENT
Issue Date	: 09/22/2009	: TERM ADJUSTMENT IN VIEW
Appliction No	: 10/667,763	: OF WYETH AND NOTICE OF INTENT TO
Filed	: 09/22/2003	: ISSUE CERTIFICATE OF CORRECTION
		:

The Request for Recalculation is **GRANTED** to the extent indicated.

The patent term adjustment has been determined to be **1081** days. The USPTO will *sua sponte* issue a certificate of correction reflecting the amount of PTA days determined by the recalculation.

Prior to the issuance of the certificate of correction, the USPTO will afford patentee an opportunity to be heard and request reconsideration. Accordingly, patentee has **one month or thirty (30) days**, whichever is longer, to file a request for reconsideration of this patent term adjustment calculation. See 35 U.S.C. 154(b)(3)(B)(ii) and 37 CFR 1.322(a)(4). No extensions of time will be granted under 37 CFR 1.136.

Patentee should use document code PET.OP if electronically filing a request for reconsideration of this patent term adjustment calculation. The patentee must also include the information required by 37 CFR 1.705(b)(2) and the fee required by 37 CFR 1.18(e). If patentee does not file a timely request for reconsideration of this patent term adjustment calculation including the information required by 37 CFR 1.705(b)(2) and the fee required by 37 CFR 1.18(e), the USPTO will issue a certificate of correction reflecting the PTA determination noted above.

Patentee should be aware that in order to preserve the right to review in the United States District Court for the District of Columbia of the USPTO patent term adjustment determination, patentee must ensure that he or she also take the steps required under 35 U.S.C. 154(b)(4)(A) in a timely manner. Nothing in the request for recalculation should be construed as providing an alternative time frame for commencing a civil action under 35 U.S.C. 154(b)(4)(A).

Any questions concerning this decision should be directed to the Office of Patent Legal Administration at 571-272-7702.

UNITED STATES PATENT AND TRADEMARK OFFICE

UNITED STATES DEPARTMENT OF COMMERCE
United States Patent and Trademark Office
Address: COMMISSIONER FOR PATENTS
P.O. Box 1450
Alexandria, Virginia 22313-1450
www.uspto.gov

PHILIP S. JOHNSON
JOHNSON & JOHNSON
ONE JOHNSON & JOHNSON PLAZA
NEW BRUNSWICK, NJ 08933-7003

Mail Date: 05/17/2010

Applicant : Ray C. Wasielewski
Patent Number : 7591854
Issue Date : 09/22/2009
Application No : 10/667,763
Filed : 09/22/2003

: NOTICE CONCERNING IMPROPER
: CALCULATION OF PATENT TERM
: ADJUSTMENT BASED UPON USPTO
: IMPROPERLY MEASURING REDUCTION
: PERIOD UNDER 37 CFR 1.704(c)(10).

The United States Patent and Trademark Office (USPTO) discovered that in processing the recent recalculation decisions mailed in response to patentee's filed Request for Recalculation of Patent Term Adjustment in view of Wyeth, the USPTO improperly measured the reduction period for reductions under 37 CFR 1.704(c)(10). Pursuant to 37 CFR 1.704(c)(10), patentee's reduction begins on the date of filing the amendment under 37 CFR 1.312 ("1.312 amendment") or other related paper and ends on the date that the Office mails a response to the filing of the 1.312 amendment or other paper. It has been discovered that during the recalculation, the calculation failed to the limit the reduction to the mail date of the response to the 1.312 amendment or other paper. Accordingly, patentee's reductions were greater than warranted.

This notice **VACATES** the previous GRANTED request for recalculation and provides patentee with a revised GRANTED recalculation.

The patent term adjustment has been determined to be **1173** days. The USPTO will *sua sponte* issue a certificate of correction reflecting the amount of patent term adjustment (PTA) days determined by the recalculation.

Prior to the issuance of the certificate of correction, the USPTO will afford patentee an opportunity to be heard and request reconsideration. Accordingly, patentee has **one month or thirty (30) days** from the mail date of this notice, whichever is longer, to file a request for reconsideration of this PTA calculation. See 35 U.S.C. § 154(b)(3)(B)(ii) and 37 CFR 1.322(a)(4).

Patentee should use document code PET.OP if electronically filing a request for reconsideration of this PTA calculation. The patentee must also include the information required by 37 CFR 1.705(b)(2), and the fee required by 37 CFR 1.18(e). If patentee does not file a timely request for reconsideration of this PTA calculation, including the information required by 37 CFR 1.705(b)(2) and the fee required by 37 CFR 1.18(e), the USPTO will issue a certificate of correction reflecting the PTA determination noted above.

Patentee should be aware that in order to preserve the right of review of the USPTO's PTA determination in the United States District Court for the District of Columbia, patentee must ensure that the steps required under 35 U.S.C. § 154 (b)(4) are taken in a timely manner. Nothing in the request for recalculation should be construed as providing an alternative time frame for commencing a civil action under 35 U.S.C. § 154(b)(4).

UNITED STATES PATENT AND TRADEMARK OFFICE

COMMISSIONER FOR PATENTS
UNITED STATES PATENT AND TRADEMARK OFFICE
P.O. BOX 1450
ALEXANDRIA, VA 22313-1450
www.uspto.gov

DEC -1 2004

In re Application of	:	
Gary F. Lake	:	
Serial No. 10/667,767	:	DECISION ON PETITION
Filed: September 22, 2003	:	TO MAKE SPECIAL
For: CLIPBOARD	:	

Applicant's petition, filed July 8, 2004, requests that this application be rendered special for examination in that applicant is over sixty-five (65) years of age.

The petition has been reviewed and is found to be in compliance with the requirements for special status as set forth in Section 708.02(IV) of the Manual of Patent Examining Procedure (MPEP).

PETITION GRANTED.

E. Rollins-Cross, Director
Technology Center 3700

James G. O'Neill
Klein, O'Neill & Singh, LLP
2 Park Plaza, Suite 510
Irvine, CA 92614

UNITED STATES PATENT AND TRADEMARK OFFICE

Commissioner for Patents
United States Patent and Trademark Office
P.O. Box 1450
Alexandria, VA 22313-1450
www.uspto.gov

STAAS & HALSEY LLP
SUITE 700
1201 NEW YORK AVENUE, N.W.
WASHINGTON, DC 20005

COPY MAILED

JUL 16 2008

OFFICE OF PETITIONS

In re Application of	:	
Yoshifusa Togawa	:	
Application No. 10/667,790	:	DECISION GRANTING PETITION
Filed: September 23, 2003	:	UNDER 37 CFR 1.313(c)(2)
Attorney Docket No. 1614.1026D	:	

This is a decision on the petition under 37 CFR 1.313(c)(2), filed July 9, 2008, to withdraw the above-identified application from issue after payment of the issue fee.

The petition is **GRANTED**.

The above-identified application is withdrawn from issue for consideration of a submission under 37 CFR 1.114 (request for continued examination). *See* 37 CFR 1.313(c)(2).

Petitioner is advised that the issue fee paid on April 23, 2008 cannot be refunded. If, however, this application is again allowed, petitioner may request that it be applied towards the issue fee required by the new Notice of Allowance.[1]

Telephone inquiries regarding this decision should be directed to undersigned at (571) 272-1642.

This application is being referred to Technology Center AU 2116 for processing of the request for continued examination under 37 CFR 1.114 and for consideration of the concurrently filed information disclosure statement.

April M. Wise
Petitions Examiner
Office of Petitions

[1] *The request to apply the issue fee to the new Notice may be satisfied by completing and returning the new Part B – Fee(s) Transmittal Form (along with any balance due at the time of submission). Petitioner is advised that the Issue Fee Transmittal Form* ***must*** *be completed and timely submitted to avoid abandonment of the application.*

SPE RESPONSE FOR CERTIFICATE OF CORRECTION

Paper No.: ——

DATE : 4/23/09

TO SPE OF : ART UNIT 2116

SUBJECT : Request for Certificate of Correction for Appl. No.: 10/667790 Patent No.: 7461278 B2

Please respond to this request for a certificate of correction within 7 days.

FOR IFW FILES:

Please review the requested changes/corrections as shown in the **COCIN** document(s) in the IFW application image. No new matter should be introduced, nor should the scope or meaning of the claims be changed.

Please complete the response (see below) and forward the completed response to scanning using document code **COCX**.

FOR PAPER FILES:

Please review the requested changes/corrections as shown in the attached certificate of correction. Please complete this form (see below) and forward it with the file to:

Certificates of Correction Branch (C of C)
Randolph Square 9D62-B
Palm Location 7580

Virginia Tolbert
Certificates of Correction Branch
703-756-1591

Thank You For Your Assistance

The request for issuing the above-identified correction(s) is hereby:
Note your decision on the appropriate box.

- ☑ **Approved** — **All** changes apply.
- ☐ **Approved in Part** — Specify below which changes **do not** apply.
- ☐ **Denied** — State the reasons for denial below.

Comments:

The correction should be entered in accordance with 37CFR 1.78(a)(2), 37CFR 1.322 and in light of the transmittal letter filed 9/23/03 (see preliminary amendment to specification filed on page 2 thereof).

/Thomas Lee/ — **SPE**

2115 — **Art Unit**

UNITED STATES PATENT AND TRADEMARK OFFICE

Commissioner for Patents
United States Patent and Trademark Office
P.O. Box 1450
Alexandria, VA 22313-1450
www.uspto.gov

THE NOBLITT GROUP, PLLC
4800 NORTH SCOTTSDALE ROAD
SUITE 6000
SCOTTSDALE AZ 85251

MAILED

JUL 0 2 2009

OFFICE OF PETITIONS

In re Application of	:	
Fowler et al.	:	
Application No. 10/667,805	:	ON PETITION
Filed: September 22, 2003	:	
Attorney Docket No. 10039.0100	:	

This is a decision on the petition under 37 C.F.R. § 1.137(b), filed May 20, 2009, to revive the above-identified application.

The petition is **GRANTED**.

The petition satisfies the requirements of 37 CFR 1.137(b) in that petitioner has supplied (1) the reply in the form of a Notice of Appeal and a Request for Reconsideration After Final Office Action, (2) the petition fee, and (3) a proper statement of unintentional delay.

The Notice of Appeal filed May 20, 2009, has been entered and made of record. Accordingly, the 2-month period for filing the appeal brief accompanied by the fee required by law, runs from the date of this decision.

As Power of Attorney was only recently given to the petitioner, it is not apparent whether the statement of unintentional delay was signed by a person who would have been in a position of knowing that the entire delay in filing the required reply from the due date for the reply until the filing of a grantable petition pursuant to 37 CFR 1.137(b) was unintentional. Nevertheless, in accordance with 37 CFR 10.18, the statement is accepted as constituting a certification of unintentional delay. However, in the event that petitioner has no knowledge that the delay was unintentional, petitioner must make such an inquiry to ascertain that, in fact, the delay was unintentional. If petitioner discovers that the delay was intentional, petitioner must notify the Office.

Telephone inquiries concerning this decision should be directed to the undersigned at (571) 272-3206.

This matter is being referred to Technology Center AU 2163 for further processing of the Notice of Appeal.

Liana Walsh
Petitions Examiner
Office of Petitions

UNITED STATES PATENT AND TRADEMARK OFFICE

Commissioner for Patents
United States Patent and Trademark Office
P.O. Box 1450
Alexandria, VA 22313-1450
www.uspto.gov

THE FARRELL LAW FIRM, P.C.
333 EARLE OVINGTON BOULEVARD
SUITE 701
UNIONDALE, NY 11553

COPY MAILED

JAN 0 2 2008

OFFICE OF PETITIONS

In re Application of Cho et al. :
Application No. 10/667,811 : Decision on Petition
Filing Date: September 22, 2003 :
Attorney Docket No. 678-1121 :

This is a decision on the petition under 37 CFR 1.181, filed August 30, 2007, to withdraw the holding of abandonment.

The petition is **granted**.

The Office mailed a final Office action on October 27, 2006. The Office action set a three (3) month shortened statutory period for reply.

The file wrapper for the instant application contains a RCE and request for a two-month extension of time filed March 29, 2007. A review of Office financial records indicate the Office also received the required fees for the RCE and two-month extension of time on March 29, 2007. The transmittal sheet bears a certificate of mailing date of March 27, 2007.

The Office mailed a Notice of Abandonment on July 12, 2007. The Notice states the application is abandoned due applicant's failure to timely file a proper reply to the October 27, 2006 final Office action.

The Notice of Abandonment is incorrect. A proper reply was timely filed in response to the final Office action. The Notice of Abandonment is hereby vacated and the holding of abandonment withdrawn.

Technology Center Art Unit 2838 will be informed of the instant decision and the application will be further examined in due course.

Telephone inquiries regarding this communication should be directed to Petitions Attorney Steven Brantley at (571) 272-3203.

Charles Steven Brantley
Senior Petitions Attorney
Office of Petitions

UNITED STATES PATENT AND TRADEMARK OFFICE

Commissioner for Patents
United States Patent and Trademark Office
P.O. Box 1450
Alexandria, VA 22313-1450
www.uspto.gov

CALFEE HALTER & GRISWOLD
800 SUPERIOR AVENUE
SUITE 1400
CLEVELAND, OH 44114

COPY MAILED
SEP 0 3 2004
OFFICE OF PETITIONS

In re Application of
Theodore D. Wakefield II
Application No. 10/667,815
Filed: September 22, 2003
Attorney Docket No. 12873.04635

ON PETITION

This is a decision on the petition under 37 CFR 1.137(b), filed August 18, 2004, to revive the above-identified application.

The petition is GRANTED.

The above-identified application became abandoned for failure to submit the issue/publication fee in a timely manner in reply to the Notice of Allowance mailed March 5, 2004, which set a statutory period for reply of three (3) months. Accordingly, the above-identified application became abandoned on June 8, 2004.

Telephone inquiries concerning this decision should be directed to Wan Laymon at (703) 306-5685.[1]

This matter is being referred to Publishing Division.

Wan Laymon
Petitions Examiner
Office of Petitions
Office of the Deputy Commissioner
for Patent Examination Policy

[1] Effective September 27, 2004, the phone number will be 571-272-3220.

UNITED STATES PATENT AND TRADEMARK OFFICE

Commissioner for Patents
United States Patent and Trademark Office
P.O. Box 1450
Alexandria, VA 22313-1450
www.uspto.gov

Michael B. Johannesen, Esq.
Lowenstein Sandler, P.C.
65 Livingston Avenue
Roseland, NJ 07068

MAILED

SEP 05 2006

Technology Center 2100

In re Application of: John PHENIX
Application No. 10/667,816
Filed: 22 September 2003
For: UTILITY FOR IDENTIFYING DIFFERENCES BETWEEN TWO JAVA OBJECTS

DECISION ON PETITION TO MAKE SPECIAL (ACCELERATED EXAMINATION) UNDER M.P.E.P. §708.02 (VIII)

This is a decision on the petition filed 22 September 2003, under 37 C.F.R. 102(d) and M.P.E.P. § 708.02(VIII): Accelerated Examination, to make the above-identified application special.

The Petition is **DISMISSED**.

M.P.E.P. § 708.02, Section VIII which sets out the prerequisites for a grantable petition for Accelerated Examination under 37 C.F.R. § 102(d) states in relevant part:

A new application (one which has not received any examination by the examiner) may be granted special status provided that applicant (and this term includes applicant's attorney or agent) complies with each of the following items:

(a) Submits a petition to make special accompanied by the fee set forth in 37 CFR 1.17(h);

(b) Presents all claims directed to a single invention, or if the Office determines that all the claims presented are not obviously directed to a single invention, will make an election without traverse as a prerequisite to the grant of special status;

(c) Submits a statement(s) that a pre-examination search was made, listing the field of search by class and subclass, publication, Chemical Abstracts, foreign patents, etc. The pre-examination search must be directed to the invention as claimed in the application for which special status is requested. A search made by a foreign patent office satisfies this requirement;

(d) Submits one copy each of the references deemed most closely related to the subject matter encompassed by the claims if said references are not already of record; and

(e) Submits a detailed discussion of the references, which discussion points out, with the particularity required by 37 CFR 1.111 (b) and (c), how the claimed subject matter is patentable over the references.

In this case, the petition fails to adequately meet the requirement (e) as set forth supra. Responsive to requirement (e), applicant must provide a "detailed discussion of the references, which discussion points out, with the particularity required by 37 CFR 1.111 (b) and (c), how the claimed subject matter is patentable over the references." Petitioner should ensure that the above discussion is directed to *how the language of each of the independent claims are specifically distinguishable and patentable from the references* provided pursuant to requirement (d) supra.

The petition filed 22 September 2003 identifies specifics of the independent claim language (claim 1) and suggests those claim limitations do not appear in the identified reference(s). However, the identified language, i.e. "comparing two objects recursively" and "recording the differences so that the differences may be put into human-readable form" are not set forth in independent claim 1 as alleged. The petition does not specifically recite language or limitations from the independent claim to properly compare/contrast the claimed invention with respect to the prior art in the identified references in accordance with the requirements of 37 CFR 1.111 (b) and (c). Petitioner is required to submit a detailed discussion that includes accurately identified claim limitations with particularity for each independent-claim that shows how the claimed invention distinguishes over the relevant teachings of each reference.

Applicant's petition further fails to provide a "detailed discussion of the references" with the requisite particularity that illuminates the salient prior art issues relative to the claimed subject matter. Petitioner's **cursory treatment** of the references does not detail, with the particularity called for under section (e), the relevancy of the prior art pedagogy in order to sufficiently set forth a case distinguishing the limitations claimed to be patentable in relation to the given reference.

In the discussion of the references, Petitioner is required to point out (substantively detail) the prior art elements and associations germane to the claims to fully flesh-out the comparison between the referenced prior art and Applicant's claimed features. The petition must specifically show, for each independent-claim, specific language that distinguishes over each given reference in order to specify "how the claimed subject matter is patentable over the references."

Finally, with reference to the selected seven references cited as "being of possible additional interest (additional references)", it is unclear to the deciding official if these references are deemed to be "most closely related to the subject matter encompassed by the claims" or not since although cited, no detailed discussion in accordance with the requirements of 37 CFR 1.111(b) and (c) is present. Only those references deemed to be the most closely related to the subject matter encompassed by the claims should be submitted and discussed.

Petition to Make Special **DISMISSED**.

Petitioner is given one opportunity to perfect the petition. Any request for reconsideration must be filed within TWO MONTHS of the mail date of this decision.

Until the renewed petition is submitted, the application will be returned to the examiner's docket to await treatment on the merits in the normal order of examination.

Brian L. Johnson
Special Program Examiner
Technology Center 2100
Computer Architecture, Software and Information Security
571-272-3595

UNITED STATES PATENT AND TRADEMARK OFFICE

Commissioner for Patents
United States Patent and Trademark Office
P.O. Box 1450
Alexandria, VA 22313-1450
www.uspto.gov

JOHN S REID
1926 SOUTH VALLEYVIEW LANE
SPOKANE WA 99212-0157

COPY MAILED
JUN 1 8 2004
OFFICE OF PETITIONS

In re Application of	:	
Cole, et al.	:	
Application No. 10/667,831	:	DECISION ON PETITION
Filed: September 22, 2003	:	
Attorney Docket No. FO01-P03	:	

This is a decision on the paper titled "PETITION TO ACCEPT DRAWING AND ACCORD FILING DATE", filed April 15, 2004 (Certificate of Mailing dated April 12, 2004), which is being treated as a petition under 37 CFR 1.53 to accord the above identified application a filing date of September 22, 2003, with Figure 5 of the drawings as a part of the original disclosure.

The petition is **GRANTED**.

Application papers in the above-identified application were filed on September 22, 2003. However, on March 10, 2004, the Initial Patent Examination Division mailed applicant a "Notice of Omitted Items(s) in a Nonprovisional Application." Applicants were notified that the application papers had been accorded a filing date; however, Figure 5 of the drawings described in the specification appeared to have been omitted.

In response, applicants filed the instant petition on April 15, 2004. Accompanying the petition was Figure 5 of the drawings. Applicants maintain that the application as originally filed included Figure 5 of the drawings. In support thereof, applicants submitted a postcard receipt identifying this application, itemizing "Drawings: 20 sheets" as enclosed, bearing a United States Patent and Trademark Office date-stamp of September 22, 2003, and lacking any notation of non receipt of any item listed.

A postcard receipt which itemizes and properly identifies the items which are being filed serves as *prima facie* evidence of receipt in the Office of all items listed thereon on the date stamped thereon by the Office. See MPEP 503.

Given the basis for granting this petition, the petition fee of $130 will be refunded to petitioner under separate cover.

The application is being forwarded to the Office of Initial Patent Examination (OIPE) for further processing with a filing date of September 22, 2003, using the application papers received in the Office on that date and Figure 5 of the drawings as resupplied on petition filed April 15, 2003.

Telephone inquiries related to this decision should be directed to Petitions Attorney Cliff Congo at 703-305-0272.

Kenya A. McLaughlin / for.

Charles Pearson
Director
Office of Petitions

I hereby certify that this correspondence is being deposited with the United States Postal Service as first class mail in an envelope addressed to the Commissioner for Patents, P.O. Box 1450, Arlington, VA 22313-1450.
Date of Deposit: April 12, 2004
Typed Name of Person Mailing Paper or Fee: John S. Reid

Signature: John S. Reid

OIPE JC102 APR 15 2004 PATENT & TRADEMARK OFFICE

PATENT APPLICATION

DOCKET NO. FO01-P03

IN THE
UNITED STATES PATENT AND TRADEMARK OFFICE

INVENTORS: Stephen P. COLE et al. **CONFIRMATION NO. 1005**

SERIAL NO.: 10/667,831 **GROUP ART UNIT: n/a**

FILING DATE: September 22, 2003 **EXAMINER: n/a**

TITLE: METHOD OF OBTAINING PORE PRESSURE AND FLUID SATURATION CHANGES IN SUBTERRANEAN RESERVOIRS BY FORWARD MODELING

MAIL STOP DAC
COMMISSIONER FOR PATENTS
P.O. BOX 1450
ARLINGTON, VA 22313-1450

PETITION TO ACCEPT DRAWING AND ACCORD FILING DATE

SIR OR MADAM:

This Petition is in response to the March 10, 2004 "Notice Of Omitted Items In A Non-Provisional Patent Application".

Adjustment date: 06/16/2004 AKELLEY
04/19/2004 AWONDAF1 00000070 10667831
01 FC:1460 -130.00 OP

Petition

The Applicants hereby petition the Commissioner accept the attached copy of Figure 5 of application serial number 10/667,831, and accord the application the original filing date of September 22, 2003. The Applicants' reasons in support of this petition are as follows:

04/19/2004 AWONDAF1 00000070 10667831
01 FC:1460 130.00 OP

S/N: 10/001,297
Case 10011080-1
Amendment "B"

Refund Ref: 06/16/2004 AKELLEY 0000136918
CHECK Refund Total: $130.00

September 22, 2003. Timely and favorable consideration of this Petition is respectfully requested.

Respectfully submitted,

Stephen P. COLE et al.

Date: April 12, 2004

By _____
John S. Reid
Attorney and agent for Applicant
Reg. No. 36,369
Phone: (509) 534-5789

UNITED STATES PATENT AND TRADEMARK OFFICE

COMMISSIONER FOR PATENTS
UNITED STATES PATENT AND TRADEMARK OFFICE
P.O. BOX 1450
ALEXANDRIA, VA 22313-1450
www.uspto.gov

MAILED

APR 12 2004

Director's Office
Group 3700

John D. Gugliotta
202 Delaware Building
137 South Main Street
Akron, OH 44308

In re application of
James R. Bowers

Serial Number: 10/667836
Filed: September 23, 2003

DECISION ON PETITION TO MAKE SPECIAL UNDER 37 CFR. 1.102(c)

For: **AUTOMATED CONDENSATE DRAIN SYSTEM**

This is a decision on the petition filed on September 23, 2003, under 37 CFR. 1.102(c) to make special the above identified application because of the age/health of the applicant. Since the requirements of the M.P.E.P Section 708.02 IV have been met, the petition will be GRANTED.

The examiner is directed (1) to make an interference search for possible interfering applications, (2) to promptly examine this application out of turn, and (3) if any interfering application is discovered, to examine such application simultaneously and state in the first official letter of such application that it is being taken out of turn because of a possible interference.

Petitioner is advised that this application will continue to be special, throughout its entire prosecution and pendency, including interference or appeal, if any, only is Petitioner makes a prompt bona-fide effort, in response to each Office action, to place the application in condition for allowance, even if it is necessary to conduct an interview with the Examiner to accomplish this purpose.

Summary: Decision on Petition **GRANTED**.

Richard A. Bertsch
Director
Technology Center 3700
(703) 308-0975

rt: 4/9/04

UNITED STATES PATENT AND TRADEMARK OFFICE

Commissioner for Patents
United States Patent and Trademark Office
P.O. Box 1450
Alexandria, VA 22313-1450
www.uspto.gov

LOUIS P. HERZBERG
IBM CORPORATION
INTELLECTUAL PROPERTY LAW DEPT.
P.O. BOX 218
YORKTOWN HEIGHTS NY 10598

COPY MAILED

OCT 09 2007

OFFICE OF PETITIONS

In re Application of	:	
Jian Zhang et al	:	
Application No. 10/667,841	:	DECISION GRANTING PETITION
Filed: September 22, 2003	:	UNDER 37 CFR 1.137(b)
Attorney Docket No. CN920020006US1	:	

This is a decision on the petition under 37 CFR 1.137(b), filed May 3, 2007, to revive the above-identified application.

The petition is **GRANTED**.

The petition satisfies the conditions for revival pursuant to the provisions of 37 CFR 1.137(b) in that (1) the reply in the form of the issue and publication fee; (2) the petition fee; and (3) the required statement of unintentional delay have been received. Accordingly, the reply to the Notice of Allowance of November 14, 2006, is accepted as having been unintentionally delayed.

Telephone inquiries concerning this decision should be directed to the undersigned at (571) 272-3208.

This matter is being referred to Patent Publication.

Karen Creasy

Karen Creasy
Petitions Examiner
Office of Petitions

UNITED STATES PATENT AND TRADEMARK OFFICE

Commissioner for Patents
United States Patent and Trademark Office
P.O. Box 1450
Alexandria, VA 22313-1450
www.uspto.gov

THOMAS K. HONG
1666 QUEEN STREET EAST, UNIT 18
TORONTO ON M4L 1G3 CA CANADA

COPY MAILED

DEC 22 2005

OFFICE OF PETITIONS

In re Application of
Thomas Hong
Application No. 10/667,844
Filed: September 23, 2003
Attorney Docket Number: 67 TH-10-US
Title of Invention: PAINT STIRRING DEVICE

ON PETITION

This is a decision on the petition filed November 7, 2005, under 37 CFR 1.137(a) to revive the above-identified application.

The petition to revive under 37 CFR § 1.137(a) is **DISMISSED**.

Any request for reconsideration must be submitted within TWO (2) MONTHS from the mail date of this decision. Extensions of time under 37 CFR § 1.136(a) are permitted. The reconsideration request should include a cover letter entitled "Renewed Petition under 37 CFR § 1.137(a)." This is **not** a final agency action within the meaning of 5 U.S.C. § 704.

This above-identified application became abandoned for failure to timely file a complete reply to the non-final Office Action of December 29, 2004. A Notice of Non-Compliant Amendment (37 CFR 1.121) was mailed on March 7, 2005 which set an extendable reply period of one month. This application became abandoned on April 8, 2005. A Notice of Abandonment was mailed on September 8, 2005.

PETITION TO REVIVE UNDER 37 CFR § 1.137(a)

A grantable petition under 37 CFR § 1.137(a) must be accompanied by:

(1) the required reply,[1]

---

[1] In a nonprovisional application abandoned for failure to prosecute, the required reply may be met by the filing of a continuing application. In an application or patent, abandoned or lapsed for failure to pay the issue fee or any portion thereof, the required reply must be the payment of the issue fee or any outstanding balance thereof.

(2) the petition fee,

(3) a showing to the satisfaction of the Director that the entire delay in filing the required reply from the due date for the reply until the filing of a grantable petition pursuant to this paragraph was unavoidable, and

(4) a terminal disclaimer and fee if the application was filed on or before June 8, 1995 or if the application is a design application.

The instant petition lacks items (1) and (3).

As to item (1), petitioner has failed to submit a reply to the Notice of Non-Compliant amendment. A response to the Notice of Non-Compliant amendment must be submitted with any petition under 37 CFR 1.137.

As to item (3), the showing of record is not sufficient to establish to the satisfaction of the Director that the delay was unavoidable within the meaning of 37 CFR §1.137(a).

The Office may revive an abandoned application if the delay in responding to the relevant outstanding office requirement is shown to the satisfaction of the Commissioner to have been "unavoidable." See, 37 CFR § 1.137(a)(3). Decisions on reviving abandoned applications have adopted the reasonably prudent person standard in determining if the delay was unavoidable. Ex parte Pratt, 1887 Dec. Comm'r Pat. 31, 32-33 (Comm'r Pat. 1887) (the term "unavoidable" is applicable to ordinary human affairs, and requires no more greater care or diligence than is generally used and observed by prudent and careful men in relation to their most important business."); In re Mattullath, 38 App. D.C. 497, 514-15 (D.C. Cir. 1912); Ex parte Henrich, 1913 Dec. Comm'r Pat. 139, 141 (Comm'r Pat. 1913). In addition, decisions on revival are made on a "case by case basis, taking all the facts and circumstances into account." Smith v. Mossinghoff, 671 F.2d 533, 538, 213 USPQ 977, 982 (D.C. Cir. 1982). A petition to revive an application as unavoidably abandoned cannot be granted where petitioner has failed to meet his or her burden of establishing the cause of the unavoidable delay. Haines v. Quigg, 673 F. Supp. 314, 5 USPQ2D 1130 (N.D. Ind. 1987).

The showing of record is inadequate to establish unavoidable delay within the meaning of 35 U.S.C. § 133 and 37 CFR 1.137(a).[2] Specifically, an application is "unavoidably" abandoned only where petitioner, or counsel for petitioner, takes all action necessary for a proper response to the outstanding Office action, but through the intervention of unforeseen circumstances, such as failure of mail, telegraph, facsimile, or the negligence of otherwise reliable employees, the response is not timely received in the Office.[3]

Petitioner states that the abandonment was unavoidable and applicant has not lost interest in the issuance of the application.

Petitioner's arguments have been considered but they are not persuasive. Petitioner has failed to provide any statements or evidence to establish the failure to reply to the Notice of Non-Compliant Amendment was unavoidably delayed. It is not sufficient that petitioner merely states that the delay is unavoidable. Petitioner should provide facts and evidence that may warrant a finding of unavoidable delay within the meaning of 37

---

[2] See MPEP 711(c)(III)(c)(2) for a discussion of the requirements for a showing of unavoidable delay.

[3] Ex parte Pratt, 1887 Dec. Comm'r Pat. 31 (Comm'r Pat. 1887).

CFR 1.137(a).

Alternative Venue

Petitioner may wish to consider filing a petition to revive based on unintentional abandonment under 37 CFR 1.137(b). A grantable petition pursuant to 37 C.F.R. § 1.137(b) must be accompanied by the required reply, the required petition fee ($750.00 for small entity), and a statement that the **entire** delay in filing the required reply from the due date for the reply until the filing of a grantable petition pursuant to 37 C.F.R. § 1.137(b) was unintentional.

The filing of a petition under 37 C.F.R. § 1.137(b) cannot be intentionally delayed, and therefore, must be filed promptly. A person seeking revival due to unintentional delay cannot make a statement that the delay was unintentional unless the entire delay, including the delay from the date it was discovered that the application was abandoned until the filing of the petition to revive under 37 C.F.R. § 1.137(b), was unintentional. A statement that the delay was unintentional is not appropriate if petitioner intentionally delayed the filing of a petition for revival under 37 C.F.R. § 1.137(b).

Further correspondence with respect to this matter should be addressed as follows:

By mail:	Mail Stop Petition Commissioner for Patents P.O. Box 1450 Alexandria, VA 22313-1450
By facsimile:	(571) 273-8300
By delivery service: (FedEx, UPS, DHL, etc.)	U.S. Patent and Trademark Office Randolph Building 401 Dulany Street Alexandria, VA 22314

Telephone inquiries should be directed to the undersigned at (571) 272-3215.

Charlema R. Grant

Charlema R. Grant
Petitions Attorney
Office of Petitions

UNITED STATES PATENT AND TRADEMARK OFFICE

Commissioner for Patents
United States Patent and Trademark Office
P.O. Box 1450
Alexandria, VA 22313-1450
www.uspto.gov

MAILED
FROM DIRECTOR'S OFFICE

NOV 06 2006

TECHNOLOGY CENTER 3600

FULBRIGHT & JAWORSKI, LLP
666 FIFTH AVE
NEW YORK NY 10103-3198

In re application of	:	**DECISION ON PETITION**
Edward Ikeguichi et al	:	**TO MAKE SPECIAL FOR**
Application No. 10/667,848	:	**NEW APPLICATION**
Filed: September 22, 2003	:	**UNDER 37 CFR 1.102**
For: SYSTEM AND METHOD FOR CONTINUOUS DATA ANALYSIS OF AN ONGOING CLINICAL TRIAL		

This is a decision on the petition filed on September 20, 2006 to make the above-identified application special for accelerated examination procedure under 37 C.F.R. § 1.102.

The petition to make the application special is **DENIED**.

REGULATION AND PRACTICE

To be eligible for accelerated examination under 37 C.F.R. § 1.102 and pursuant to the "Changes to Practice for Petitions in Patent Applications to Make Special and for Accelerated Examination" published in the Federal Register on June 26, 2006 (71 Fed. Reg. 36323), the following conditions must be satisfied:

1. The application must be a non-reissue utility or design application filed under 37 CFR 1.111(a);
2. The application, the petition and the required fees must be filed electronically using the USPTO's electronic filing system (EFS), or EFS-web; if not filed electronically, a statement asserting that EFS and EFS-web were not available during the normal business hours;
3. The application, at the time of filing, must be complete under 37 CFR 1.51 and in condition for examination;
4. The application must contain three or fewer independent claims and twenty or fewer total claims and the claims must be directed to a single invention.

The petition to make special filed under 37 C.F.R. § 1.102(c) is not acceptable because it was not filed with the application as required in the above Federal Register Notice of June 26, 2006. It appears that the petition was filed under the guidelines for making an application special that were in effect prior to August 25, 2006. As of August 25, 2006 the new guidelines replaced the old guidelines. Since applicants' petition was received on September 20, 2006 the petition must be considered under the new guidelines and thus is properly **DENIED**.

For the above-stated reason, the petition is denied. Therefore, the application will be examined in its regular turn.

Any inquiry regarding this decision should be directed to Randolph A. Reese, Special Program Examiner, at (571) 272-6619.

Randolph A. Reese
Special Program Examiner
Technology Center 3600

SPE RESPONSE FOR CERTIFICATE OF CORRECTION

Paper No.: _____

DATE : 3/28/05

TO SPE OF : ART UNIT 3662

SUBJECT : Request for Certificate of Correction on Patent No.: 6809684 B2

A response is requested with respect to the accompanying request for a certificate of correction.

Please complete this form and return with file, within 7 days to:
Certificates of Correction Branch - PK 3-915
Palm location **7580** - Tel. No. 305-8309

With respect to the change(s) requested, correcting Office and/or Applicant's errors, should the patent read as shown in the certificate of correction? No new matter should be introduced, nor should the scope or meaning of the claims be changed.

Virginia Tolbert

Thank You For Your Assistance — **Certificates of Correction Branch**

The request for issuing the above-identified correction(s) is hereby:
Note your decision on the appropriate box.

- ☐ **Approved** — All changes apply.
- ☒ **Approved in Part** — Specify below which changes **do not** apply.
- ☐ **Denied** — State the reasons for denial below.

Comments:

See continuing sheet.

Thomas H. Parsons — **SPE**

3662 — **Art Unit**

1. The changes to column 1 are denied. Applicant's specification states that the documents cited in the section applicant wishes to change are incorporated by reference (p. 2, lines 17-18). In order to incorporate a document by reference into an application, that reference must be identified sufficiently that one could identify that reference. The filed specification, p. 2, lines 23-24 does not appear to provide enough information for one to identify application 10/668,011 from it. At best, one would be able to identify 60/413251. While 10/668,011 is a non-provisional of 60/413251, a non-provisional can contain additional disclosures that were not in the provisional. Additionally, 10/668,011 is a non-provisional of several different provisional, and so many differ in scope from 60/413251 due to these additional disclosures. The filed specification did not provide the necessary notice that application 10/668,011 was incorporated by reference into the patent. Thus, any change that would suggest application 10/668,011 is incorporated by reference into this patent is improper.

2. The change to column 6 is approved.

UNITED STATES PATENT AND TRADEMARK OFFICE

UNITED STATES DEPARTMENT OF COMMERCE
United States Patent and Trademark Office
Address: COMMISSIONER FOR PATENTS
P.O. Box 1450
Alexandria, Virginia 22313-1450
www.uspto.gov

FINNEGAN, HENDERSON, FARABOW, GARRETT & DUNNER LLP
901 NEW YORK AVENUE, NW
WASHINGTON, DC 20001-4413

Mail Date: 04/26/2010

Applicant	: Takehiko Nakano	: DECISION ON REQUEST FOR
Patent Number	: 7614087	: RECALCULATION of PATENT
Issue Date	: 11/03/2009	: TERM ADJUSTMENT IN VIEW
Appliction No	: 10/667,872	: OF WYETH AND NOTICE OF INTENT TO
Filed	: 09/22/2003	: ISSUE CERTIFICATE OF CORRECTION
		:

The Request for Recalculation is **GRANTED** to the extent indicated.

The patent term adjustment has been determined to be **899** days. The USPTO will *sua sponte* issue a certificate of correction reflecting the amount of PTA days determined by the recalculation.

Prior to the issuance of the certificate of correction, the USPTO will afford patentee an opportunity to be heard and request reconsideration. Accordingly, patentee has **one month or thirty (30) days**, whichever is longer, to file a request for reconsideration of this patent term adjustment calculation. See 35 U.S.C. 154(b)(3)(B)(ii) and 37 CFR 1.322(a)(4). No extensions of time will be granted under 37 CFR 1.136.

Patentee should use document code PET.OP if electronically filing a request for reconsideration of this patent term adjustment calculation. The patentee must also include the information required by 37 CFR 1.705(b)(2) and the fee required by 37 CFR 1.18(e). If patentee does not file a timely request for reconsideration of this patent term adjustment calculation including the information required by 37 CFR 1.705(b)(2) and the fee required by 37 CFR 1.18(e), the USPTO will issue a certificate of correction reflecting the PTA determination noted above.

Patentee should be aware that in order to preserve the right to review in the United States District Court for the District of Columbia of the USPTO patent term adjustment determination, patentee must ensure that he or she also take the steps required under 35 U.S.C. 154(b)(4)(A) in a timely manner. Nothing in the request for recalculation should be construed as providing an alternative time frame for commencing a civil action under 35 U.S.C. 154(b)(4)(A).

Any questions concerning this decision should be directed to the Office of Patent Legal Administration at 571-272-7702.

UNITED STATES PATENT AND TRADEMARK OFFICE

UNITED STATES DEPARTMENT OF COMMERCE
United States Patent and Trademark Office
Address: COMMISSIONER FOR PATENTS
P.O. Box 1450
Alexandria, Virginia 22313-1450
www.uspto.gov

SPRINT
6391 SPRINT PARKWAY
KSOPHT0101-Z2100
OVERLAND PARK, KS 66251-2100

Mail Date: 04/21/2010

Applicant	: Manish Mangal	: DECISION ON REQUEST FOR
Patent Number	: 7634558	: RECALCULATION of PATENT
Issue Date	: 12/15/2009	: TERM ADJUSTMENT IN VIEW
Appliction No	: 10/667,881	: OF WYETH AND NOTICE OF INTENT TO
Filed	: 09/22/2003	: ISSUE CERTIFICATE OF CORRECTION
		:

The Request for Recalculation is **GRANTED** to the extent indicated.

The patent term adjustment has been determined to be **1560** days. The USPTO will *sua sponte* issue a certificate of correction reflecting the amount of PTA days determined by the recalculation.

Prior to the issuance of the certificate of correction, the USPTO will afford patentee an opportunity to be heard and request reconsideration. Accordingly, patentee has **one month or thirty (30) days**, whichever is longer, to file a request for reconsideration of this patent term adjustment calculation. See 35 U.S.C. 154(b)(3)(B)(ii) and 37 CFR 1.322(a)(4). No extensions of time will be granted under 37 CFR 1.136.

Patentee should use document code PET.OP if electronically filing a request for reconsideration of this patent term adjustment calculation. The patentee must also include the information required by 37 CFR 1.705(b)(2) and the fee required by 37 CFR 1.18(e). If patentee does not file a timely request for reconsideration of this patent term adjustment calculation including the information required by 37 CFR 1.705(b)(2) and the fee required by 37 CFR 1.18(e), the USPTO will issue a certificate of correction reflecting the PTA determination noted above.

Patentee should be aware that in order to preserve the right to review in the United States District Court for the District of Columbia of the USPTO patent term adjustment determination, patentee must ensure that he or she also take the steps required under 35 U.S.C. 154(b)(4)(A) in a timely manner. Nothing in the request for recalculation should be construed as providing an alternative time frame for commencing a civil action under 35 U.S.C. 154(b)(4)(A).

Any questions concerning this decision should be directed to the Office of Patent Legal Administration at 571-272-7702.

UNITED STATES PATENT AND TRADEMARK OFFICE

COMMISSIONER FOR PATENTS
UNITED STATES PATENT AND TRADEMARK OFFICE
P.O. BOX 1450
ALEXANDRIA, VA 22313-1450
www.uspto.gov

JUN 17 2004

Nathaniel Tran
3205 Aspen Grove
Irvine, CA 92618-4085

In re Application of	:	
Nathenial Tran	:	
Serial No.: 10/667,882	:	DECISION ON PETITION
Filed: September 22, 2003	:	

This is in response to applicants' " Petition to Make Special " filed September 22, 2003. The delay is regretted.

Applicant's statement has been considered. Requirements under MPEP 708.02 X have been met. Accordingly, the petition is granted. The prosecution will proceed according to the procedure set forth under MPEP708.02. There is no provision for "withdrawal" from this special status.

Petition Granted.

Cecilia Tsang
Special Program Examiner, TC1600

UNITED STATES PATENT AND TRADEMARK OFFICE

Commissioner for Patents
United States Patent and Trademark Office
P.O. Box 1450
Alexandria, VA 22313-1450
www.uspto.gov
DIW Oct-06

NATHANIEL TUE TRAN
42065 ZEVO DRIVE
SUITE #9
TEMECULA CA 92590

COPY MAILED
OCT 0 5 2006
OFFICE OF PETITIONS

In re Application of	:	
Nathaniel Tue Tran	:	DECISION ON PETITION TO
Application No. 10/667,882	:	WITHDRAW HOLDING OF
Filed: 22 September, 2003	:	ABANDONMENT
Atty Docket No. Biomarker	:	

This is a decision on the "REQUEST FOR RECONSIDERATION OF HOLDING OF ABANDONMENT" filed on 11 July, 2006, which is treated as a petition to withdraw the holding of abandonment in the above-identified application.

The petition is **GRANTED**.

A Notice of Abandonment was mailed on 12 May, 2006, stating that the application was abandoned for failure to timely file a proper reply to the Notice mailed on 31 October, 2005.

A review of the record reveals that on 31 October, 2005, a Notice of Fee Deficiency was mailed, stating that $125.00 was due for the presentation of excess claims, setting a one (1) month shortened period for reply. On 17 November, 2005, a Fee Transmittal, including a $125.00 payment, was filed.

Petitioner asserts that the Notice of Abandonment should be withdrawn because a timely reply was filed.

Upon review, it is noted that the reply filed on 17 November, 2005, was a timely and proper response to the Notice mailed on 31 October, 2005. As such, there is no abandonment in fact. The Office regrets the error.

The holding of abandonment is withdrawn. The Notice of Abandonment is vacated.

The application is referred to Technology Center Art Unit 1634 for further processing.

Telephone inquiries concerning this matter may be directed to the undersigned at (571) 272-3231.

D Wood

Douglas I. Wood
Senior Petitions Attorney
Office of Petitions

UNITED STATES PATENT AND TRADEMARK OFFICE

Commissioner for Patents
United States Patent and Trademark Office
P.O. Box 1450
Alexandria, VA 22313-1450
www.uspto.gov

MORRISON & FOERSTER LLP
1650 TYSONS BOULEVARD
SUITE 400
MCLEAN VA 22102

COPY MAILED

OCT 2 2 2007

OFFICE OF PETITIONS

In re Application of	:	
Gert Heidenreich	:	
Application No. 10/667,890	:	DECISION ON PETITION
Filed: September 23, 2003	:	TO WITHDRAW
Attorney Docket No. 449122063400	:	FROM RECORD
	:	

This is a decision on the Request to Withdraw as attorney or agent of record under 37 C.F.R. § 1.36(b) filed May 25, 2007.

The request is **DISMISSED** as moot.

A review of the file record indicates that the power of attorney to Morrison & Foerster, LLP has been revoked by the assignee of the patent application on August 8, 2007. Accordingly, the request to withdraw under 37 C.F.R. § 1.36(b) is moot.

All future communications from the Office will continue to be directed to the below-listed address until otherwise notified by applicant.

Telephone inquires concerning this decision should be directed to undersigned at 571-272-1642.

April M. Wise
Petitions Examiner
Office of Petitions

cc: KEVIN R. SPIVAK
BELL, BOYD & LLOYD, LLC
70 WEST MADISON STREET
SUITE 3100
CHICAGO, IL 60602-4207

UNITED STATES PATENT AND TRADEMARK OFFICE

Commissioner for Patents
United States Patent and Trademark Office
P.O. Box 1450
Alexandria, VA 22313-1450
www.uspto.gov

Paper No.

FINNEGAN, HENDERSON, FARABOW,
GARRETT & DUNNER, L.L.P.
1300 I Street, NW
Washington DC 20005-3315

COPY MAILED

SEP 2 0 2006

OFFICE OF PETITIONS

Patent No. 7,067,259	:	LETTER REGARDING
Issue Date: June 27, 2006	:	PATENT TERM ADJUSTMENT
Application No. 10/667,891	:	AND
Filed: September 23, 2003	:	NOTICE OF INTENT TO ISSUE
Atty Docket No. 03495.0294	:	CERTIFICATE OF CORRECTION

This letter is in response to the "NOTICE OF ERROR IN THE DETERMINATION OF PATENT TERM ADJUSTMENT" filed August 2, 2006. Pursuant to patentees' duty of good faith and candor to the Office, patentees disclose that the Patent Term Adjustment indicated on the patent should be twenty-eight (28) days not fifty-seven (57) days.

The request for reconsideration of patent term adjustment indicated in the patent is **GRANTED**.

The patent term adjustment indicated in the patent is to be corrected by issuance of a certificate of correction showing a revised Patent Term Adjustment of twenty-eight (28) days.

On June 27, 2006, this application matured into U.S. Patent No. 7,067,259, with a revised patent term adjustment of 57 days. Patentees disclose an incorrect Patent Term Adjustment on the basis that the Office incorrectly docketed receipt of the issue fee payment on October 29, 2005, when in fact the issue fee was filed on November 29, 2005.

Patentees are correct. Thus, pursuant to § 1.703(a)(6), a period of adjustment of 90 days, not 119 day, should have been entered for Office delay in issuing the patent more than four

months after the date, November 29, 2005, the issue fee was paid and all outstanding requirements were satisfied (from March 30, 2006 to June 27, 2006).

In view thereof, the patent should have issued with a revised patent term adjustment of twenty-eight (28) days.

As this letter was submitted as an advisement to the Office of an error in Patentees' favor, the Office will not assess the $200.00 application fee under 37 CFR 1.705(b). The Office thanks patentees for their good faith and candor in bringing this to the attention of the Office.

The application file is being forwarded to the Certificates of Correction Branch for issuance of a certificate of correction in order to rectify this error. The Office will issue a certificate of correction indicating that the term of the above-identified patent is extended or adjusted by twenty-eight (28) days.

Telephone inquiries specific to this matter should be directed to the undersigned at (571) 272-3219.

Nancy Johnson
Senior Petitions Attorney
Office of Petitions

Enclosure: Copy of DRAFT Certificate of Correction

UNITED STATES PATENT AND TRADEMARK OFFICE

CERTIFICATE OF CORRECTION

PATENT : 7,067,259 B2

DATED : June 27, 2006

INVENTOR(S) : Roth et al.

DRAFT

It is certified that error appears in the above-identified patent and that said Letters Patent is hereby corrected as shown below:

On the cover page,

[*] Notice: Subject to any disclaimer, the term of this patent is extended or adjusted under 35 USC 154(b) by (57) days

Delete the phrase "by 57" and insert – by 28 days--

UNITED STATES PATENT AND TRADEMARK OFFICE

Commissioner for Patents
United States Patent and Trademark Office
P.O. Box 1450
Alexandria, VA 22313-1450
www.uspto.gov

OBER / KALER
C/O ROYAL W. CRAIG
120 EAST BALTIMORE STREET
BALTIMORE MD 21202

COPY MAILED

AUG 3 1 2006

OFFICE OF PETITIONS

In re Application of
Jong Mu Choi et al.
Application No. 10/667,929
Filed: September 22, 2003
Attorney Docket No.: SEMIRE-PA-US-7

ON PETITION

This is a decision on the petition filed February 16, 2006 under 37 CFR 1.137(b),[1] to revive the above-identified application.

The petition is **GRANTED**.

This application became abandoned for failure to timely reply to the non-Final Office Action mailed July 1, 2005. A shortened statutory period of three months was set for replying to the non-Final Office Action. No extensions of time having been requested, this application became abandoned October 4, 2005. Accordingly, a Notice of Abandonment was mailed February 8, 2006.

This matter is being referred to Technology Center 2687 for appropriate action on the amendment filed February 16, 2006.

Telephone inquiries concerning this matter should be directed to the undersigned Petitions Attorney at (571) 272-3212.

Patricia Faison-Ball
Senior Petitions Attorney
Office of Petitions

---

[1]Effective December 1, 1997, the provisions of 37 CFR 1.137(b) now provide that where the delay in reply was unintentional, a petition may be filed to revive an abandoned application or a lapsed patent pursuant to 37 CFR 1.137(b). A grantable petition filed under the provisions of 37 CFR 1.137(b) must be accompanied by:

(1) the required reply, unless previously filed. In a nonprovisional application abandoned for failure to prosecute, the required reply may be met by the filing of a continuing application. In a nonprovisional application filed on or after June 8, 1995, and abandoned for failure to prosecute, the required reply may also be met by the filing of a request for continued examination in compliance with § 1.114. In an application or patent, abandoned or lapsed for failure to pay the issue fee or any portion thereof, the required reply must be the payment of the issue fee or any outstanding balance thereof. In an application abandoned for failure to pay the publication fee, the required reply must include payment of the publication fee.

(2) the petition fee as set forth in 37 CFR 1.17(m);

(3) a statement that the entire delay in filing the required reply from the due date for the reply until the filing of a grantable petition pursuant to 37 CFR 1.137(b) was unintentional. The Commissioner may required additional information where there is a question whether the delay was unintentional; and

(4) any terminal disclaimer (and fee as set forth in 37 CFR 1.20(d)) required pursuant to 37 CFR 1.137(c)).

UNITED STATES PATENT AND TRADEMARK OFFICE

Commissioner for Patents
United States Patent and Trademark Office
P.O. Box 1450
Alexandria, VA 22313-1450
www.uspto.gov

CHOATE, HALL & STEWART LLP
TWO INTERNATIONAL PLACE
BOSTON, MA 02110

MAILED

JUL 19 2010

OFFICE OF PETITIONS

In re Application of
Richard J. Cohen, et al.
Application No. 10/667,956
Filed: September 22, 2003
Attorney Docket No. 0492611-0513

DECISION ON PETITION
TO WITHDRAW
FROM RECORD

This is a decision on the Request to Withdraw as attorney or agent of record under 37 C.F.R. § 1.36(b), filed May 28, 2010.

The request is **NOT APPROVED**.

A grantable request to withdraw as attorney/agent of record must be signed by every attorney/agent seeking to withdraw or contain a clear indication that one attorney is signing on behalf of another/others.

The Office will no longer accept address changes to a new practitioner of law firm filed with a Request, absent the filing of a power of attorney to the new representative. The Office will either change the correspondence address of record to the most current address information provided for the assignee of the entire interest whose properly became of record under 37 CFR 3.71 or, the most current address information provided for the first named inventor.

Accordingly, the request to withdraw from record cannot be approved because the request does not include an acceptable current correspondence address for future communications from the Office.

All future communications from the Office will continue to be directed to the above-listed address until otherwise notified by applicant.

Telephone inquiries concerning this decision should be directed to undersigned at 571-272-1642. All other inquiries concerning the examination or status of this application should be directed to the Technology Center.

/AMW/
April M. Wise
Petitions Examiner
Office of Petitions

SPE RESPONSE FOR CERTIFICATE OF CORRECTION

Paper No.: _____

DATE : 06/07/2007

TO SPE OF : ART UNIT 1700 (1755)

SUBJECT : Request for Certificate of Correction on Patent No.: 7,160,837
Attn: Lynn Hailey

A response is requested with respect to the accompanying request for a certificate of correction.

Please complete this form and return with file, within 7 days to:
Certificates of Correction Branch - PK 3-922
Palm location 7580 - Tel. No. 305-8309

With respect to the change(s) requested, correcting Office and/or Applicant's errors, should the patent read as shown in the certificate of correction? No new matter should be introduced, nor should the scope or meaning of the claims be changed.

Ok to make dependency change in claim 10 as requested in C of C?

Ernest C. White, LIE305-8339
Certificates of Correction Branch

Thank You For Your Assistance

The request for issuing the above-identified correction(s) is hereby:
Note your decision on the appropriate box.

- [x] **Approved** — All changes apply.
- [ ] **Approved in Part** — Specify below which changes **do not** apply.
- [ ] **Denied** — State the reasons for denial below.

Comments:

Second submission

Patricia L. Harley
AU 1755
9/17/07

SPE Art 1755

J.A. LORENZO
SUPERVISORY PATENT EXAMINER

PTOL-308 (REV. 7/03) U.S. DEPARTMENT OF COMMERCE Patent and Trademark Office

SPE RESPONSE FOR CERTIFICATE OF CORRECTION

Paper No.: _____

DATE : 06/07/2007

TO SPE OF : ART UNIT 1700 (1755)

SUBJECT : Request for Certificate of Correction on Patent No.: 7,160,837
Attn: Lynn Hailey

A response is requested with respect to the accompanying request for a certificate of correction.

Please complete this form and return with file, within **7** days to:
Certificates of Correction Branch - PK 3-922
Palm location **7580** - Tel. No. 305-8309

With respect to the change(s) requested, correcting Office and/or Applicant's errors, should the patent read as shown in the certificate of correction? No new matter should be introduced, nor should the scope or meaning of the claims be changed.

Ok to make dependency change in claim 10 as requested in C of C?

Ernest C. White, LIE305-8339
Certificates of Correction Branch

Thank You For Your Assistance

The request for issuing the above-identified correction(s) is hereby:
Note your decision on the appropriate box.

- ☐ **Approved** — All changes apply.
- ☒ **Approved in Part** — Specify below which changes **do not** apply.
- ☒ **Denied** — State the reasons for denial below.

Comments:
Claim 10 (orig. cl. 26) depended from cl. 8 (orig. cl. 21) and was never amended to depend from cl. 13 (orig. cl. 2). Amending the claim now requires renumbering of additional claims - See Attachments

J.A. LORENGO
SUPERVISORY PATENT EXAMINER

SPE Art

UNITED STATES PATENT AND TRADEMARK OFFICE

CERTIFICATE OF CORRECTION

PATENT NO. : 7,160,837

DATED : January 9, 2007

INVENTOR(S) : Norifumi HASEGAWA

It is certified that an error appears in the above-identified patent and that said Letters Patent is hereby corrected as shown below:

Column 8, line 41 (claim 10, line 2), "8" should read – 13 – ; and

Column 10, line 25 (claim 25, line 7) , delete "insoluble".

Mailing address of sender:

Patent No. 7,160,837

No. of add'l copies
@ .30 per page

Bacon & Thomas, PLLC
625 Slaters Lane 4th Floor
Alexandria, Va. 22314
TEL (703) 683-0500
FAX (703) 683-1080

MAY 2 4 2007

OIPE IAP59
MAY 2 1 2007
PATENT & TRADEMARK OFFICE

CQ C $

IN THE UNITED STATES PATENT AND TRADEMARK OFFICE

U.S. Patent No. 7,160,837	Examiner: Patricia L. Hailey
Norifumi HASEGAWA	
Issued: January 9, 2007	Art Unit: 1755
Serial No.: 10/667,974	
Filed: September 23, 2003	
For: MIXED CONDUCTOR AND MIXED CONDUCTOR PRODUCING METHOD	

Certificate
MAY 2 4 2007
of Correction

REQUEST FOR CERTIFICATE OF CORRECTION

Commissioner for Patents
P.O. Box 1450
Alexandria, VA 22313-1450

Sir:

It is respectfully requested that a Certificate of Correction per the attached be issued for the captioned patent.

Please note that claim 8 (original claim 21) and claim 10 (original claim 26) are redundant. Claim 10, presented as claim 26, was intended to depend from claim 2 which issued as claim 13.

A check in the amount of $100.00 is submitted herewith to cover the fee required by 37 CFR 1.20(a).

Respectfully submitted,
BACON & THOMAS, PLLC

By: George A. Loud
Registration No. 25,814

05/23/2007 HBERHE 00000013 7160837
01 FC:1811 100.00 OP

Date: May 21, 2007

BACON & THOMAS, PLLC
625 Slaters Lane, 4th Floor
Alexandria, Virginia 22314
Telephone: (703) 683-0500

MAY 2 4 2007.

Claims as issued

Appl. No. 10/667,974
Amendment dated: October 6, 2005
Reply to OA of: June 6, 2005

This listing of claims will replace all prior versions and listings of claims in the application.

Listing of Claims:

1 ~~1~~(currently amended). A mixed conductor in the form of a single material comprising an electron conductor portion made of an inorganic material and a proton conductor portion made of an inorganic material, said electron conductor portion and said proton conductor portion being fixed together by at least one of covalent bonding, intercalation and inclusion so as not to dissolve in water.

13 ~~2~~ (currently amended). A mixed conductor in the form of a single material comprising an electron conductor portion ~~made of an inorganic material obtained by carbonizing an organic material~~ and a proton conductor portion made of an inorganic material, said electron conductor portion and said proton conductor portion being fixed together by at least one of covalent bonding, intercalation and inclusion, and wherein said electron conductor portion is made of an inorganic material obtained by carbonizing an organic material.

2 ~~3~~(currently amended). The mixed conductor in the form of a single material according to claim 1, wherein said electron conductor portion is obtained by carbonizing at least one organic compound selected from the group consisting of aliphatic hydrocarbons, aromatic hydrocarbons and derivatives of aliphatic hydrocarbons and aromatic hydrocarbons.

4(canceled).

3
~~5~~(currently amended). The mixed conductor in the form of a single material according to claim 1, wherein said electron conductor portion is a carbonaceous material selected from the group consisting of graphite and carbon nanotubes.

4
~~6~~(currently amended). The mixed conductor in the form of a single material according to claim 1, wherein said proton conductor portion contains at least one member selected from the group consisting of phosphorus-containing compounds, sulfur-containing compounds, carboxylic acids, and inorganic solid-state acids.

5
~~7~~(currently amended). The mixed conductor in the form of a single material according to claim 1, wherein the electron conductor portion is fixed to the proton conductor portion by a covalent bond.

8(canceled).

9(canceled).

6
~~10~~(currently amended). The mixed conductor in the form of a single material according to claim 1, wherein said electron conductor portion has consecutive carbon-carbon bonds including a carbon-carbon double bond.

7
~~11~~(currently amended). The mixed conductor in the form of a single material according to claim 1, wherein said electron conductor portion is obtained by carbonizing an organic compound having one of or both of a carbon-carbon double bond and a carbon-carbon triple bond.

~~8~~ 17
~~12~~(currently amended). A method for producing a mixed conductor in the form of a single material comprising:

a first step of obtaining a high molecular precursor by polymerizing an organic compound having one of or both of a carbon-carbon double bond and a carbon-carbon triple bond with a proton conducting material; and

a second step of pyrolyzing the precursor obtained in the first step in an inert atmosphere.

22 ~~18~~(currently amended). A method for producing a mixed conductor <u>in the form of a single material</u> comprising:

a first step of obtaining a high molecular precursor by dispersing a proton conducting material into an organic compound polymer having one of or both of a carbon-carbon double bond and a carbon-carbon triple bond; and

a second step of pyrolyzing the precursor obtained in the first step in an inert atmosphere.

18 ~~14~~(previously presented). The mixed conductor producing method according to claim 17 ~~12~~, wherein the organic compound having one of or both of the carbon-carbon double bond and the carbon-carbon triple bond is an aliphatic hydrocarbon or an aromatic hydrocarbon.

19 ~~15~~(previously presented). The mixed conductor producing method according to claim 18 ~~14~~, wherein said organic compound is at least one member selected from the group consisting of polyacetylene, resorcinol, phenol, phenylphenol, polyaniline, polypyrrole, polythiophene, phenylphosphonic acid, and phenylsilane alkoxide.

20 ~~16~~(currently amended). The mixed conductor producing method according to claim 17 ~~12~~, wherein said proton conducting material is at least one member selected from the group consisting of phosphoric acid, phosphates, sulfuric acid, sulfates, tungsten oxide hydroxide, rhenium oxide hydroxide, silicon oxide, tin oxide, ~~zirconia~~ <u>zirconium</u> oxide, tungstophosphoric acid, and tungstosilicic acid.

23 ~~17~~(currently amended). A mixed conductor producing method wherein an organic compound having a π bond is dehydration-condensation polymerized and bound with a compound having movable protons to obtain a precursor having proton conduction, and [[an]] energy is applied to said precursor under an inert gas atmosphere to thereby impart electron conduction to the precursor.

24 ~~18~~(currently amended). A mixed conductor in the form of a single material comprising an electron conductor portion made of an inorganic material and a proton conductor portion made of an inorganic material, said electron conductor portion and said proton conductor portion being fixed together to form a catalyst support ~~insoluble~~ which does not dissolve in water and a noble metal catalyst supported on said catalyst.

21 ~~19~~(original). The mixed conductor producing method according to claim 17 ~~12~~, comprising a third step of causing the precursor burned in the second step to support a noble metal catalyst.

25 ~~20~~(currently amended). A mixed conductor in the form of a single material comprising an electron conductor portion made of an inorganic material obtained by carbonizing an inorganic material and a proton conductor portion made of an inorganic material, said electron conductor portion and said proton conductor portion being fixed together to form a catalyst support ~~insoluble~~ which does not dissolve in water and a noble metal catalyst supported on said catalyst support.

8 ~~21~~(currently amended). The mixed conductor in the form of a single material according to claim 1 wherein said electron conductor portion is selected from the group consisting of carbonaceous materials, gold, palladium, platinum, magnesium, lithium, titanium, and alloys thereof; and

the proton conductor portion is made of at least one member selected from the group consisting of carbonic acid, boric acid, phosphoric acid, phosphoric acid esters,

sulfuric acid, sulfuric acid esters, tungsten oxide hydroxide, rhenium oxide hydroxide, silicon oxide, tin oxide, ~~zirconia~~ zirconium oxide, tungstophosphoric acid, and tungstosilicic acid.

9 ~~22~~(currently amended). The mixed conductor in the form of a single material according to claim 8 ~~21~~ wherein said electron conductor portion is a carbonaceous material.

14 ~~23~~(currently amended). The mixed conductor in the form of a single material according to claim 13 ~~22~~ wherein said proton conductor portion is formed of phosphoric acid groups and said carbonaceous material has a graphite structure.

15 ~~24~~(currently amended). The mixed conductor in the form of a single material according to claim 13 ~~22~~ wherein said proton conductor portion is at least one member selected from the group consisting of phosphoric acid, phosphates, sulfuric acid, sulfates, tungsten oxide hydroxide, rhenium oxide hydroxide, silicon oxide, tin oxide, ~~zirconia~~ zirconium oxide, tungstophosphoric acid, and tungstosilicic acid.

16 ~~25~~(currently amended). The mixed conductor in the form of a single material according to claim 15 ~~24~~ wherein said electron conductor portion has a graphite structure.

10 ~~26~~(currently amended). The mixed conductor in the form of a single material according to claim 8 ~~20~~ wherein said electron conductor portion is selected from the group consisting of carbonaceous materials, gold, palladium, platinum, magnesium, lithium, titanium, and alloys thereof; and

the proton conductor portion is made of at least one member selected from the group consisting of carbonic acid, boric acid, phosphoric acid, phosphoric acid esters, sulfuric acid, sulfuric acid esters, tungsten oxide hydroxide, rhenium oxide hydroxide, silicon oxide, tin oxide, ~~zirconia~~ zirconium oxide, tungstophosphoric acid, and tungstosilicic acid.

11 ~~27~~(currently amended). The mixed conductor in the form of a single material according to claim 10 ~~26~~ wherein said electron conductor portion is a carbonaceous material.

12 ~~28~~(currently amended). The mixed conductor in the form of a single material according to claim 11 ~~27~~ wherein said proton conductor portion is formed of phosphoric acid groups and said carbonaceous material has a graphite structure.

26 ~~29~~(currently amended). The mixed conductor in the form of a single material according to claim 25 ~~29~~ wherein said proton conductor portion is at least one member selected from the group consisting of phosphoric acid, phosphates, sulfuric acid, sulfates, tungsten oxide hydroxide, rhenium oxide hydroxide, silicon oxide, tin oxide, ~~zirconia~~ zirconium oxide, tungstophosphoric acid, and tungstosilicic acid.

27 ~~30~~(currently amended). The mixed conductor in the form of a single material according to claim 26 ~~29~~ wherein said electron conductor portion has a graphite structure.

28 l ~~31~~(new). A mixed conductor in the form of a single material comprising an electron conductor portion made of an inorganic material and a proton conductor portion made of an inorganic material, said electron conductor portion and said proton conductor portion being fixed together by intercalation so as not to dissolve in water.

29 ~~32~~(new). A mixed conductor in the form of a single material comprising an electron conductor portion made of an inorganic material and a proton conductor portion made of an inorganic material, said electron conductor portion and said proton conductor portion being fixed together by inclusion so as not to dissolve in water.

Claims if cl. 26 had been amended to depend from cl. 2

Appl. No. 10/667,974
Amendment dated: October 6, 2005
Reply to OA of: June 6, 2005

This listing of claims will replace all prior versions and listings of claims in the application.

Listing of Claims:

1 ~~1~~(currently amended). A mixed conductor in the form of a single material comprising an electron conductor portion made of an inorganic material and a proton conductor portion made of an inorganic material, said electron conductor portion and said proton conductor portion being fixed together by at least one of covalent bonding, intercalation and inclusion so as not to dissolve in water.

10 ~~2~~(currently amended). A mixed conductor in the form of a single material comprising an electron conductor portion ~~made of an inorganic material obtained by carbonizing an organic material~~ and a proton conductor portion made of an inorganic material, said electron conductor portion and said proton conductor portion being fixed together by at least one of covalent bonding, intercalation and inclusion, and wherein said electron conductor portion is made of an inorganic material obtained by carbonizing an organic material.

2 ~~3~~(currently amended). The mixed conductor in the form of a single material according to claim 1, wherein said electron conductor portion is obtained by carbonizing at least one organic compound selected from the group consisting of aliphatic hydrocarbons, aromatic hydrocarbons and derivatives of aliphatic hydrocarbons and aromatic hydrocarbons.

4(canceled).

3 ~~4~~ ~~5~~(currently amended). The mixed conductor in the form of a single material according to claim 1, wherein said electron conductor portion is a carbonaceous material selected from the group consisting of graphite and carbon nanotubes.

4 ~~5~~ ~~6~~(currently amended). The mixed conductor in the form of a single material according to claim 1, wherein said proton conductor portion contains at least one member selected from the group consisting of phosphorus-containing compounds, sulfur-containing compounds, carboxylic acids, and inorganic solid-state acids.

5 ~~6~~ ~~7~~(currently amended). The mixed conductor in the form of a single material according to claim 1, wherein the electron conductor portion is fixed to the proton conductor portion by a covalent bond.

8(canceled).

9(canceled).

6 ~~10~~(currently amended). The mixed conductor in the form of a single material according to claim 1, wherein said electron conductor portion has consecutive carbon-carbon bonds including a carbon-carbon double bond.

7 ~~11~~(currently amended). The mixed conductor in the form of a single material according to claim 1, wherein said electron conductor portion is obtained by carbonizing an organic compound having one of or both of a carbon-carbon double bond and a carbon-carbon triple bond.

17 ~~12~~(currently amended). A method for producing a mixed conductor in the form of a single material comprising:

a first step of obtaining a high molecular precursor by polymerizing an organic compound having one of or both of a carbon-carbon double bond and a carbon-carbon triple bond with a proton conducting material; and

a second step of pyrolyzing the precursor obtained in the first step in an inert atmosphere.

22 ~~13~~(currently amended). A method for producing a mixed conductor <u>in the form of a single material</u> comprising:

a first step of obtaining a high molecular precursor by dispersing a proton conducting material into an organic compound polymer having one of or both of a carbon-carbon double bond and a carbon-carbon triple bond; and

a second step of pyrolyzing the precursor obtained in the first step in an inert atmosphere.

18 ~~14~~(previously presented). The mixed conductor producing method according to claim ~~12~~ 17, wherein the organic compound having one of or both of the carbon-carbon double bond and the carbon-carbon triple bond is an aliphatic hydrocarbon or an aromatic hydrocarbon.

19 ~~15~~(previously presented). The mixed conductor producing method according to claim ~~14~~ 18, wherein said organic compound is at least one member selected from the group consisting of polyacetylene, resorcinol, phenol, phenylphenol, polyaniline, polypyrrole, polythiophene, phenylphosphonic acid, and phenylsilane alkoxide.

20 ~~16~~(currently amended). The mixed conductor producing method according to claim 12, wherein said proton conducting material is at least one member selected from the group consisting of phosphoric acid, phosphates, sulfuric acid, sulfates, tungsten oxide hydroxide, rhenium oxide hydroxide, silicon oxide, tin oxide, ~~zirconia~~ <u>zirconium</u> oxide, tungstophosphoric acid, and tungstosilicic acid.

23 ~~17~~(currently amended). A mixed conductor producing method wherein an organic compound having a π bond is dehydration-condensation polymerized and bound with a compound having movable protons to obtain a precursor having proton conduction, and [[an]] energy is applied to said precursor under an inert gas atmosphere to thereby impart electron conduction to the precursor.

24 ~~18~~(currently amended). A mixed conductor <u>in the form of a single material</u> comprising an electron conductor <u>portion</u> made of an inorganic material and a proton conductor <u>portion</u> made of an inorganic material, said electron conductor <u>portion</u> and said proton conductor <u>portion</u> being fixed together to form a catalyst support ~~insoluble~~ <u>which does not dissolve</u> in water and a noble metal catalyst supported on said catalyst.

21 ~~19~~(original). The mixed conductor producing method according to claim ~~12~~ 17, comprising a third step of causing the precursor burned in the second step to support a noble metal catalyst.

25 ~~20~~(currently amended). A mixed conductor <u>in the form of a single material</u> comprising an electron conductor <u>portion</u> made of an inorganic material obtained by carbonizing an inorganic material and a proton conductor <u>portion</u> made of an inorganic material, said electron conductor <u>portion</u> and said proton conductor <u>portion</u> being fixed together to form a catalyst support ~~insoluble~~ <u>which does not dissolve</u> in water and a noble metal catalyst supported on said catalyst support.

8 ~~21~~(currently amended). The mixed conductor <u>in the form of a single material</u> according to claim 1 wherein said electron conductor <u>portion</u> is selected from the group consisting of carbonaceous materials, gold, palladium, platinum, magnesium, lithium, titanium, and alloys thereof; and

the proton conductor <u>portion</u> is made of at least one member selected from the group consisting of carbonic acid, boric acid, phosphoric acid, phosphoric acid esters,

sulfuric acid, sulfuric acid esters, tungsten oxide hydroxide, rhenium oxide hydroxide, silicon oxide, tin oxide, ~~zirconia~~ zirconium oxide, tungstophosphoric acid, and tungstosilicic acid.

9 ~~22~~(currently amended). The mixed conductor in the form of a single material according to claim ~~21~~ 8 wherein said electron conductor portion is a carbonaceous material.

11 ~~23~~(currently amended). The mixed conductor in the form of a single material according to claim ~~2~~ 10 wherein said proton conductor portion is formed of phosphoric acid groups and said carbonaceous material has a graphite structure.

12 ~~24~~(currently amended). The mixed conductor in the form of a single material according to claim ~~2~~ 10 wherein said proton conductor portion is at least one member selected from the group consisting of phosphoric acid, phosphates, sulfuric acid, sulfates, tungsten oxide hydroxide, rhenium oxide hydroxide, silicon oxide, tin oxide, ~~zirconia~~ zirconium oxide, tungstophosphoric acid, and tungstosilicic acid.

13 ~~25~~(currently amended). The mixed conductor in the form of a single material according to claim ~~24~~ 12 wherein said electron conductor portion has a graphite structure.

14 ~~26~~(currently amended). The mixed conductor in the form of a single material according to claim ~~21~~ 22 wherein said electron conductor portion is selected from the group consisting of carbonaceous materials, gold, palladium, platinum, magnesium, lithium, titanium, and alloys thereof; and

the proton conductor portion is made of at least one member selected from the group consisting of carbonic acid, boric acid, phosphoric acid, phosphoric acid esters, sulfuric acid, sulfuric acid esters, tungsten oxide hydroxide, rhenium oxide hydroxide, silicon oxide, tin oxide, ~~zirconia~~ zirconium oxide, tungstophosphoric acid, and tungstosilicic acid.

15 ~~27~~(currently amended). The mixed conductor in the form of a single material according to claim 14 ~~26~~ wherein said electron conductor portion is a carbonaceous material.

16 ~~28~~(currently amended). The mixed conductor in the form of a single material according to claim 15 ~~27~~ wherein said proton conductor portion is formed of phosphoric acid groups and said carbonaceous material has a graphite structure.

26 ~~29~~(currently amended). The mixed conductor in the form of a single material according to claim 25 ~~20~~ wherein said proton conductor portion is at least one member selected from the group consisting of phosphoric acid, phosphates, sulfuric acid, sulfates, tungsten oxide hydroxide, rhenium oxide hydroxide, silicon oxide, tin oxide, ~~zirconia~~ zirconium oxide, tungstophosphoric acid, and tungstosilicic acid.

27 ~~30~~(currently amended). The mixed conductor in the form of a single material according to claim 26 ~~29~~ wherein said electron conductor portion has a graphite structure.

28 ~~31~~(new). A mixed conductor in the form of a single material comprising an electron conductor portion made of an inorganic material and a proton conductor portion made of an inorganic material, said electron conductor portion and said proton conductor portion being fixed together by intercalation so as not to dissolve in water.

29 ~~32~~(new). A mixed conductor in the form of a single material comprising an electron conductor portion made of an inorganic material and a proton conductor portion made of an inorganic material, said electron conductor portion and said proton conductor portion being fixed together by inclusion so as not to dissolve in water.

UNITED STATES PATENT AND TRADEMARK OFFICE

Commissioner for Patents
United States Patent and Trademark Office
P.O. Box 1450
Alexandria, VA 22313-1450
www.uspto.gov

COPY MAILED

SEP 28 2006

OFFICE OF PETITIONS

ORUM & ROTH
53 W. JACKSON BLVD
CHICAGO IL 60604

In re Application of	:	
Denis Jolivet	:	
Application No. 10/667,989	:	DECISION ON PETITION
Filed: September 22, 2003	:	TO WITHDRAW
Attorney Docket No. 13600	:	FROM RECORD
	:	

This is a decision on the Request to Withdraw as attorney or agent of record under 37 C.F.R. § 1.36(b), filed July 16, 2006.

The request is **APPROVED**.

A review of the file record indicates that Catherine L. Glemrich: (1) does not have power of attorney in this patent application; and (2) has been employed or otherwise engaged in the proceedings in this patent application. In view of the present decision, Catherine L. Glemrich has been withdrawn from the present application and may not prepare or submit papers under 37 C.F.R. § 1.34, or correspond in any manner in this application unless appointed in an acceptable power of attorney under 37 C.F.R. § 1.32(b).

The request was signed by Catherine L. Glemrich attorney/agent of record on behalf of herself.

Catherine L. Glemrich has been withdrawn as attorney or agent of record; all other attorneys remain of record.

All future communications from the Office will continue to be directed to the above-listed address until otherwise properly notified by the applicant.

Telephone inquiries concerning this decision should be directed to Charles Smoot at 571-272-3299.

David Bucci
Petitions Examiner
Office of Petitions

UNITED STATES PATENT AND TRADEMARK OFFICE

COMMISSIONER FOR PATENTS
UNITED STATES PATENT AND TRADEMARK OFFICE
P.O. BOX 1450
ALEXANDRIA, VA 22313-1450
www.uspto.gov

SEED INTELLECTUAL PROPERTY LAW GROUP, PLLC
701 FIFTH AVENUE, SUITE 5400
SEATTLE, WA 98104-7092

COPY MAILED

SEP 13 2007

OFFICE OF PETITIONS

In re Application of
Denis Jolivet
Application No. 10/667,989
Filed: September 22, 2003
Attorney Docket No. 481062.408C1

ON PETITION

This is a decision on the petition under 37 CFR 1.137(b) filed on March 8, 2007, to revive the above-identified application.

The application became abandoned for failure to timely file a proper reply to the Ex Parte Quayle action mailed June 28, 2006.

The petition satisfies the requirements of 37 CFR 1.137(b), in that, petitioner has supplied (1) the reply in the form of an amendment to the claims and specification; (2) the petition feé of $1,500; and (3) an adequate statement of unintentional delay. Therefore, the petition is **GRANTED**.

The Office acknowledges receipt of seven (7) sheets of replacement drawings, containing Figures 1-7, filed on March 8, 2007.

This application file is being referred to Technology Center Art Unit 2872, for review of the amendment to the claims and specification filed on March 8, 2007.

Telephone inquiries concerning this decision should be directed to the undersigned at (571) 272-3226.

Andrea Smith
Petitions Examiner
Office of Petitions

UNITED STATES PATENT AND TRADEMARK OFFICE

Commissioner for Patents
United States Patent and Trademark Office
P.O. Box 1450
Alexandria, VA 22313-1450
www.uspto.gov

STEPTOE & JOHNSON LLP
2121 AVENUE OF THE STARS
SUITE 2800
LOS ANGELES CA 90067

MAILED

JUL 21 2010

OFFICE OF PETITIONS

In re Application of	:	
Julie Theel	:	DECISION ON PETITION
Application No. 10/668,049	:	TO WITHDRAW
Filed: September 22, 2003	:	FROM RECORD
Attorney Docket No. Theel.PetToy	:	

This is a decision on the Request to Withdraw as attorney or agent of record under 37 C.F.R. § 1.36(b), filed June 29, 2010.

The request is **NOT APPROVED** because it is moot.

A review of the file record indicates that on July 20, 2010 the power of attorney to Steptoe & Johnson LLP was revoked by the applicant of the patent application. Accordingly, the request to withdraw under 37 C.F.R. § 1.36(b) is moot.

All future communications from the Office will be directed to the below-listed address until otherwise notified by applicant.

Telephone inquires concerning this decision should be directed to the undersigned at 571-272- 7751. All other inquires concerning either the examination or status of the application should be directed to the Technology Center.

Joan Olszewski
Petitions Examiner
Office of Petitions

cc: LAW OFFICES OF CLEMENT CHENG
17220 NEWHOPE STREET #127
FOUNTAIN VALLEY CA 92708

UNITED STATES PATENT AND TRADEMARK OFFICE

Commissioner for Patents
United States Patent and Trademark Office
P.O. Box 1450
Alexandria, VA 22313-1450
www.uspto.gov

Date Mailed : 1-24-07

Patent No.: 6,966,545 B1
Patent Issued : November 22, 2005
Inventor(s): Ralf Eising, et. al.
Title: CHAIN BLOCK
Docket No.: MOS)1 P-103

Re: Request for Certificate of Correction

Consideration has been given your request for the issuance of a certificate of correction for the above-identified patent under the provisions of Rule 1.322.

The alleged error in col. 5, line 42, claim 11 is printed in accordance with the record.

In view of the foregoing, your request is hereby denied. However, further consideration will be given upon receipt of a request for reconsideration directed to Decisions & Certificates of Correction Branch along with a fee of $100.00.

Eva James
For Cecelia B. Newman
Certificate of Correction Branch
(703) 308-9390 ext. 124 or ext. 102

Frederick S. Burkhart
Van Dyke, Gardner, Linn & Burkhart, LLP
2851 Charlevoix Dr., S.E., Box 888695
Grand Rapids, MI 49588-8695

ej

UNITED STATES PATENT AND TRADEMARK OFFICE

COMMISSIONER FOR PATENTS
UNITED STATES PATENT AND TRADEMARK OFFICE
P.O. BOX 1450
ALEXANDRIA, VA 22313-1450
WWW.USPTO.GOV

Paper No. None

COPY MAILED

JUL 11 2005

OFFICE OF PETITIONS

Jeffrey C. Hood
Meyertons, Hood, Kivlin, Kowert & Goetzel PC
P.O. Box 398
Austin TX 78767

In re Application of
Leonid A. Bekker
Application No. 10/668,062
Filed: September 22, 2003
Attorney Docket No.:
5707-05100
Title: METHOD AND APPARATUS TO ACHIEVE ACCURATE FAN TACHOMETER WITH PROGRAMMABLE LOOK-UP TABLE

DECISION ON PETITION

This is a decision on the petition filed June 15, 2005, requesting that the above-identified application, including Figures 1-3, be accorded a filing date of September 22, 2003 as part of the original disclosure.

The application was deposited on September 22, 2003. However, on May 19, 2005, the Office of Initial Patent Examination (OIPE) mailed a "Notice of Incomplete Nonprovisional Application" (notice), stating that the application had not been accorded a filing date, and advising applicants that a filing date would be accorded upon the deposit of drawings.

In response, on June 15, 2005, applicants filed the present petition. The petition is further accompanied by a copy of 3 sheets of drawings containing Figures 1-3, along with a copy of applicants' postcard receipt acknowledging receipt of "3 page(s) Drawings (formal)(Figs. 1-3)" in the United States Patent and Trademark Office (Office) on September 22, 2003. Applicants request that Figures 1-3 be accorded a filing date of September 22, 2003.

No sheets of drawings have been located among the application papers in the electronic file. However, the evidence is convincing that the application papers deposited on September 22, 2003 included 3 sheets of drawings, and each of 3 sheets was subsequently misplaced in the Office.

Therefore, the application, including Figures 1-3, was complete on filing and entitled to a filing date of September 22, 2003 as part of the original disclosure.

Accordingly, the petition is **GRANTED**.

The notice mailed May 19, 2005 was sent in error, and is hereby **VACATED**. Therefore, no petition fee is necessary, and the petition fee has been refunded to Petitioner's Deposit Account.

OIPE will be notified that the application should receive a filing date of September 22, 2003, using the original application papers filed on that date, as well as Figures 1-3 submitted on June 15, 2005, and it will be noted in Office records that these 3 sheets of drawings were present on filing.

The general phone number for the Office of Petitions which should be used for status requests is (571) 272-3282. Telephone inquiries regarding this decision should be directed to the undersigned at (571) 272-3225.

Paul Shanoski
Senior Attorney
Office of Petitions
United States Patent and Trademark Office

UNITED STATES PATENT AND TRADEMARK OFFICE

COMMISSIONER FOR PATENTS
UNITED STATES PATENT AND TRADEMARK OFFICE
P.O. BOX 1450
ALEXANDRIA, VA 22313-1450
www.uspto.gov

David W Barman
1101 NE 176 Terrace
North Miami Beach, FL 33162

COPY MAILED

FEB 07 2005

OFFICE OF PETITIONS

In re Application of :
John Blount :
Application No. 10/668,070 :
Filed: September 22, 2003 : ON PETITION
Attorney Docket Number: :
610-001 :

This is a decision in response to the Petition Under 37 CFR 1.182, filed November 18, 2004, requesting the application be accorded a filing date of September 22, 2003, including drawing Figure 5 described in the specification.

The petition is **granted**.

The application was filed on September 22, 2003. However, on September 16, 2004, the Office of Initial Patent Examination mailed a Notice of Omitted Item(s) in a Nonprovisional Application, noting that the application had been accorded a filing; however, Figure 5 described in the specification appeared to have been omitted from the application.

In response, Applicant files the instant petition wherein Applicant avers that drawing Figure 5 was included among 6 drawing sheets originally filed with the application on September 22, 2003, and was received by this Office as evidenced by the return-receipt postcard. In support, Applicant provides a copy of a return receipt postcard acknowledging receipt of, *inter alia*, 6 sheets drawings on September 22, 2003.

A review of the return receipt postcard reveals that Petitioner is correct. The postcard acknowledges receipt of, *inter alia*, 6 sheets drawings on September 22, 2003. Petitioner has also re-submitted drawing Figure 5 with the instant petition.

Evidence of receipt of any correspondence filed in the Patent and Trademark Office can be obtained by submitting a self-

addressed postcard properly itemizing and identifying the paper or papers being filed. Upon receipt of the correspondence, the Patent and Trademark Office will check the listing on the post card against the papers submitted, making sure that all items listed are present and will then stamp the postcard with an Official date stamp and place the postcard in the outgoing mail. "A postcard receipt which itemizes and properly identifies the papers which are being filed serves as *prima facie* evidence of receipt in the PTO of all items listed thereon by the PTO." MPEP § 503.

The copy of drawing Figure 5, supplied with the instant petition on November 18, 2004, will be used for examination purposes.

A refund of the petition fee has been scheduled as authorized in the instant petition.

The application will be returned to the Office of Initial Patent Examination for further processing as a nonprovisional application with a filing date of September 22, 2003, and an indication that 6 sheets of drawings were present on filing, including drawing Figure 5, using the drawing Figure 5 filed with the instant petition on November 18, 2004.

Telephone inquiries concerning this matter should be directed to the undersigned at (571) 272-3232.

Derek L. Woods
Petitions Attorney
Office of Petitions

SPE RESPONSE FOR CERTIFICATE OF CORRECTION

Paper No.: _____

DATE : 04/29/10

TO SPE OF : ART UNIT 3738

SUBJECT : Request for Certificate of Correction for Appl. No.: 10668077 Patent No.: 7435255

Please respond to this request for a certificate of correction within 7 days.

FOR IFW FILES:

Please review the requested changes/corrections as shown in the **COCIN** document(s) in the IFW application image. No new matter should be introduced, nor should the scope or meaning of the claims be changed.

Please complete the response (see below) and forward the completed response to scanning using document code **COCX**.

FOR PAPER FILES:

Please review the requested changes/corrections as shown in the attached certificate of correction. Please complete this form (see below) and forward it with the file to:

Certificates of Correction Branch (C of C)
Randolph Square 9D40-D
Palm Location 7580

You can fax the Directors/SPE response to 571-270-9990

Lamonte Newsome
Certificates of Correction Branch
703-756-1574

Thank You For Your Assistance

The request for issuing the above-identified correction(s) is hereby:
Note your decision on the appropriate box.

- ☒ **Approved** — **All** changes apply.
- ☐ **Approved in Part** — Specify below which changes **do not** apply.
- ☐ **Denied** — State the reasons for denial below.

Comments: _____

CORINNE McDERMOTT
SUPERVISORY PATENT EXAMINER
TECHNOLOGY CENTER 3700

SPE

3738
Art Unit

UNITED STATES PATENT AND TRADEMARK OFFICE

Commissioner for Patents
United States Patent and Trademark Office
P.O. Box 1450
Alexandria, VA 22313-1450
www.uspto.gov

JOHN S. PRATT, ESQ.
KILPATRICK STOCKTON, LLP
1100 PEACHTREE STREET
ATLANTA, GA 30309

COPY MAILED

JUL 1 0 2008

OFFICE OF PETITIONS

In re Application of	:	
BOWLIN, et al.	:	
Application No. 10/668,085	:	DECISION ON PETITION
Filed: September 22, 2003	:	TO WITHDRAW
Attorney Docket No. **OGA-006.02**	:	FROM RECORD
	:	

This is a decision on the Request to Withdraw as attorney or agent of record under 37 C.F.R. § 1.36(b), filed August 28, 2007.

The request is **DISMISSED** as moot.

A review of the file record indicates that the power of attorney to **KILPATRICK STOCKTON, LLP** has been revoked by the assignee of the patent application on December 21, 2007. Accordingly, the request to withdraw under 37 C.F.R. § 1.36(b) is moot.

All future communications from the Office will continue to be directed to the below-listed address until otherwise notified by applicant.

Telephone inquires concerning this decision should be directed to the undersigned at 571-272-7253.

Monica A. Graves
Petitions Examiner
Office of Petitions

cc: **FOLEY HOAG, LLP**
PATENT GROUP, WORLD TRADE CENTER WEST
155 SEAPORT BOULEVARD
BOSTON, MA 02110

UNITED STATES PATENT AND TRADEMARK OFFICE

Commissioner for Patents
United States Patent and Trademark Office
P.O. Box 1450
Alexandria, VA 22313-1450
www.uspto.gov

STANDLEY LAW GROUP LLP
495 METRO PLACE SOUTH
SUITE 210
DUBLIN, OH 43017

COPY MAILED

AUG 3 1 2005

OFFICE OF PETITIONS

In re Application of	:
Charlie Sherlock	:
Application No. 10/668,093	: DECISION GRANTING PETITION
Filed: September 19, 2003	: UNDER 37 CFR 1.313(c)(2)
Attorney Docket No. FRK 1648-004	:

This is a decision on the petition, filed August 30, 2005, under 37 CFR 1.313(c)(2) to withdraw the above-identified application from issue after payment of the issue fee.

The petition is **GRANTED**.

The above-identified application is withdrawn from issue for consideration of a submission under 37 CFR 1.114 (request for continued examination). See 37 CFR 1.313(c)(2).

Petitioner is advised that the issue fee paid on August 25, 2005 in the above-identified application cannot be refunded. If, however, the above-identified application is again allowed, petitioner may request that it be applied towards the issue fee required by the new Notice of Allowance.[1]

Telephone inquiries should be directed to the undersigned at (571) 272-3218.

This matter is being referred to Technology Center AU 2632 for processing of the request for continued examination under 37 CFR 1.114 and for consideration of the Information Disclosure Statement.

Frances Hicks
Petitions Examiner
Office of Petitions

---

[1] *The request to apply the issue fee to the new Notice may be satisfied by completing and returning the new Issue Fee Transmittal Form PTOL-85(b), which includes the following language thereon: "Commissioner for Patents is requested to apply the Issue Fee and Publication Fee (if any) or re-apply any previously paid issue fee to the application identified above." Petitioner is advised that, whether a fee is indicated as being due or not, the Issue Fee Transmittal Form* ***must*** *be completed and timely submitted to avoid abandonment. Note the language in bold text on the first page of the Notice of Allowance and Fee(s) Due (PTOL-85).*

UNITED STATES PATENT AND TRADEMARK OFFICE

Commissioner for Patents
United States Patent and Trademark Office
P.O. Box 1450
Alexandria, VA 22313-1450
www.uspto.gov

MICHAEL MARQUAND
20 FAIRBANKS
SUITE 198
IRVINE CA 92618

COPY MAILED

NOV 0 8 2005

OFFICE OF PETITIONS

In re Application of :
Nunez :
Application No. 10/668,102 :
Filed: September 22, 2003 :
Attorney Docket No. 10486/7 // :
0109204.00131US2
For: DOCUBASE INDEXING, SEARCHING
AND DATA RETRIEVAL

DECISION
ON PETITION

This is a decision on the petition under 37 CFR 1.137(b), filed September 19, 2005, to revive the above-identified application.

This application became abandoned for failure to timely pay the issue fee and publication fee and submit corrected formal drawings within three (3) months of the mailing of the August 16, 2004 Notice of Allowance and Fee(s) Due and Notice of Allowability, respectively. Accordingly, this application became abandoned on November 17, 2004. A Notice of Abandonment was mailed on March 23, 2005.

Applicant has submitted a proper reply in the form of corrected formal drawings, the issue fee, the publication fee and a completed PTOL-85, an acceptable statement of the unintentional nature of the delay in responding to the August 16, 2004 Notice of Allowance and Fee(s) Due, and the petition fee.

The petition is **granted**.

The revocation/power of attorney/ change of correspondence address document will not be entered and processed at this time because (1) petitioner has not provided evidence that MatrixOne, Inc. is the owner of the invention at issue (the copy of the assignment from Centor Software Corporation to MatrixOne, Inc. does not establish what rights Centor Software

possessed) and (2) even if MatrixOne, Inc. Had been shown to be the owner of the invention at issue, it is not clear that Gary D. Hall has authority to bind MatrixOne, Inc. A courtesy copy of this decision will be mailed to the address listed on the petition.

This application is being forwarded to Publishing Division for processing into a patent.

Telephone inquiries concerning this matter may be directed to the undersigned at (571) 272-3230.

E. Shirene Willis

E. Shirene Willis
Senior Petitions Attorney
Office of Petitions

cc: RONALD R. DEMSHER
WILMER CUTLER PICKERING HALE AND DORR LLP
60 STATE STREET
BOSTON, MA 02109

UNITED STATES PATENT AND TRADEMARK OFFICE

Commissioner for Patents
United States Patent and Trademark Office
P.O. Box 1450
Alexandria, VA 22313-1450
www.uspto.gov

William H. Dippert, Esq.
c/o Reed Smith LLP
29th Floor
599 Lexington Avenue
New York NY 10022-7650

COPY MAILED

NOV 0 2 2004

OFFICE OF PETITIONS

In re Application of Anati, Glukhov, Atsmon & Speyer Application No. 10/668,109 Filed: September 22, 2003 Attorney Docket No. 100/03740 For: A METHOD AND SYSTEM FOR REMOTELY AUTHENTICATING IDENTIFICATION DEVICES	DECISION ACCORDING STATUS UNDER 37 CFR 1.47(a)

This is in response to the petition under 37 CFR 1.47(a), filed July 7, 2004.

The petition is granted.

Petitioners have shown that the non-signing inventor, Maxim Glukhov, cannot be located. Specifically, the declaration/statement of facts of Jonatan Milberg establishes that despite attempts to locate the inventor through the mail, through inquiries of his former employer and neighbors, through inquiries of the post office, through telephone information searches, and through a visit to his last known address, that Mr. Glukhov cannot be located. Petitioners have dilgently searched for Mr. Glukhov. Petitioners have submitted a declaration in compliance with 37 CFR 1.63 and 1.64.

This application and papers have been reviewed and found in compliance with 37 CFR 1.47(a). This application is hereby accorded Rule 1.47(a) status.

As provided in Rule 1.47(c), this Office will forward notice of this application's filing to the non-signing inventor at the address given in the petition. Notice of the filing of this application will also be published in the Official Gazette.

After this decision is mailed, the above-identified application will be forwarded to Technology Center AU 2655 for examination in due course.

Telephone inquiries should be directed to the undersigned at (571) 272-3230.

E. Shirene Willis

E. Shirene Willis
Petitions Attorney
Office of Petitions

UNITED STATES PATENT AND TRADEMARK OFFICE

Commissioner for Patents
United States Patent and Trademark Office
P.O. Box 1450
Alexandria, VA 22313-1450
www.uspto.gov

DAVID J. THIBODEAU
HAMILTON, BROOK, SMITH & REYNOLDS, P. C.
530 VIRGINIA ROAD
P.O. BOX 9133
CONCORD, MASSACHUSETTS 01742-9133

MAILED

DEC 17 2004

Technology Center 2100

In re Application of: Hinshaw et al.
Application No. 10/668,113
Filed: September 18, 2003
For: PROGRAMMABLE STREAMING DATA PROCESSOR FOR DATABASE APPLIANCE HAVING MULTIPLE PROCESSING UNIT GROUPS

DECISION ON PETITION TO MAKE SPECIAL (ACCELERATED EXAMINATION) UNDER M.P.E.P. §708.02 (VIII)

This is a response to the petition filed March 5, 2004, under 37 C.F.R. §1.102(d) and M.P.E.P. §708.02 (VII [sic]): Accelerated Examination, to make the above-identified application special.

The Petition is **DISMISSED**.

M.P.E.P. §708.02, Section VIII which sets out the prerequisites for a grantable petition for Accelerated Examination under 37 C.F.R. §1.102(d) states in relevant part:

A new application (one which has not received any examination by the examiner) may be granted special status provided that applicant (and this term includes applicant's attorney or agent) complies with each of the following items:

(a) Submits a petition to make special accompanied by the **fee set forth in 37 CFR 1.17(h)**;

(b) Presents all claims directed to a single invention, or if the Office determines that all the claims presented are not obviously directed to a single invention, will make an election without traverse as a prerequisite to the grant of special status;

(c) Submits a statement(s) that a pre-examination search was made, listing the field of search by class and subclass, publication, Chemical Abstracts, foreign patents, etc. **The pre-examination search must be directed to the invention as claimed in the application for which special status is requested.** A search made by a foreign patent office satisfies this requirement;

(d) Submits one copy each of the references deemed most closely related to the subject matter encompassed by the claims if said references are not already of record; and

(e) Submits a detailed discussion of the references, which discussion points out, with the particularity required by 37 CFR 1.111 (b) and (c), how the claimed subject matter is patentable over the references.

In those instances where the request for this special status does not meet all the prerequisites set forth above, **petitioner will be notified and the defects in the request will be stated**. The application will remain in the status of a new application awaiting action in its regular turn. In those instances where a request is defective in one or more respects, petitioner will be given one opportunity to perfect the request in a renewed petition to make special. If perfected, the request will then be granted. If not perfected in the first renewed petition, any additional renewed petitions to make special may or may not be considered at the discretion of the Group Special Program Examiner.

The petition filed March 5, 2004 fails to adequately meet requirements (c) and (e) of the criteria set forth above.

With respect to requirement (c), the pre-examination search has not been directed to the invention as claimed in the application for which special status is requested. It is noted that the search terms (listed on page 2 of the petition to make special) include "database", "distributed processing" and other similar terms. Such terms are broad as compared to the language of the claims, which includes such terms as "asymmetric data processor", programmable streaming data processor", "job processing unit" and the like. Furthermore, other relevant terms (which are recited in the claims) include: nodes, networks, and similar terms. These terms have apparently not been used in the search. Therefore, the ***pre-examination search has not been directed to the invention as claimed in the application for which special status is requested.***

With respect to requirement (e), a complete detailed discussion of the (aforementioned most closely related) references has not been provided with the necessary specificity required under 37 CFR 1.111 (b) and (c). Petitioner's submission is deficient in that it merely paraphrases the disclosure and/or abstracts (see for example, the discussion of U. S. Patent 6,415,373, which merely paraphrases the title) provided in each reference accompanied by a single statement that all the references do not include the features of the claimed invention. That is, the submission does not satisfy the requirement, as it does not provide a ***detailed discussion*** of the references and it does not point out how the ***claimed subject matter is patentable over the references.***

Petitioner should ensure that the above discussion is directed to how the language of ***each of*** the independent claims is specifically distinguishable and patentable from the references provided in requirement (d) above.

Petition to Make Special **DISMISSED**.

Petitioner is given one opportunity to perfect the petition. Any request for reconsideration must be filed within TWO MONTHS of the mail date of this decision.

Until the renewed petition is submitted, the application will be returned to the examiner's docket to await treatment on the merits in the normal order of examination.

Brian L. Johnson
Special Program Examiner
Technology Center 2100
Computer Architecture, Software and Information Security
571-272-3595

HMJ: 12/06/04

UNITED STATES PATENT AND TRADEMARK OFFICE

UNITED STATES DEPARTMENT OF COMMERCE
United States Patent and Trademark Office
Address: COMMISSIONER FOR PATENTS
P.O. Box 1450
Alexandria, Virginia 22313-1450
www.uspto.gov

HAMILTON, BROOK, SMITH & REYNOLDS, P.C.
530 VIRGINIA ROAD
P.O. BOX 9133
CONCORD, MA 01742-9133

Mail Date: 04/21/2010

Applicant	: Foster D. Hinshaw	: DECISION ON REQUEST FOR
Patent Number	: 7577667	: RECALCULATION of PATENT
Issue Date	: 08/18/2009	: TERM ADJUSTMENT IN VIEW
Appliction No	: 10/668,113	: OF WYETH AND NOTICE OF INTENT TO
Filed	: 09/18/2003	: ISSUE CERTIFICATE OF CORRECTION
		:

The Request for Recalculation is **GRANTED** to the extent indicated.

The patent term adjustment has been determined to be **1690** days. The USPTO will *sua sponte* issue a certificate of correction reflecting the amount of PTA days determined by the recalculation.

Prior to the issuance of the certificate of correction, the USPTO will afford patentee an opportunity to be heard and request reconsideration. Accordingly, patentee has **one month or thirty (30) days**, whichever is longer, to file a request for reconsideration of this patent term adjustment calculation. See 35 U.S.C. 154(b)(3)(B)(ii) and 37 CFR 1.322(a)(4). No extensions of time will be granted under 37 CFR 1.136.

Patentee should use document code PET.OP if electronically filing a request for reconsideration of this patent term adjustment calculation. The patentee must also include the information required by 37 CFR 1.705(b)(2) and the fee required by 37 CFR 1.18(e). If patentee does not file a timely request for reconsideration of this patent term adjustment calculation including the information required by 37 CFR 1.705(b)(2) and the fee required by 37 CFR 1.18(e), the USPTO will issue a certificate of correction reflecting the PTA determination noted above.

Patentee should be aware that in order to preserve the right to review in the United States District Court for the District of Columbia of the USPTO patent term adjustment determination, patentee must ensure that he or she also take the steps required under 35 U.S.C. 154(b)(4)(A) in a timely manner. Nothing in the request for recalculation should be construed as providing an alternative time frame for commencing a civil action under 35 U.S.C. 154(b)(4)(A).

Any questions concerning this decision should be directed to the Office of Patent Legal Administration at 571-272-7702.

UNITED STATES PATENT AND TRADEMARK OFFICE

Commissioner for Patents
United States Patent and Trademark Office
P.O. Box 1450
Alexandria, VA 22313-1450
www.uspto.gov

MAILED

MAY 17 2010

OFFICE OF PETITIONS

NAWCWD
CODE K00000D
STOP 1009
1 ADMINISTRATION CIRCLE
CHINA LAKE, CA 93555-6100

In re Patent No. 6,827,310	:	
Issue Date: December 7, 2004	:	
Application No. 10/668,126	:	ON PETITION
Filed: September 22, 2003	:	
Attorney Docket No.: 83166	:	

This is a decision on the petition, filed March 8, 2010, under 37 CFR 1.378(c) to accept the unintentionally delayed payment of a maintenance fee for the above-identified patent.

The petition is **GRANTED**.

This patent expired on December 7, 2008 for failure to pay the first maintenance fee. Since this petition was submitted within twenty-four months after the six-month grace period provided in 37 CFR 1.362(e), the petition was timely filed under the provisions of 37 CFR 1.378(c).

A petition to accept the unintentionally delayed payment of a maintenance fee under 35 U.S.C. 41(c) and 37 CFR 1.378(c) must be accompanied by: (1) a statement that the delay was unintentional; (2) payment of the appropriate maintenance fee, unless previously submitted; (3) payment of the surcharge set forth in 37 CFR 1.20(i)(2).

Petitioner provided an adequate statement of unintentional delay and the requisite maintenance fee; however, petitioner submitted a $700 for the surcharge required by 37 CFR 1.20(i)(2). Since the surcharge required under 37 CFR 1.20(i)(2) is $1,640, the surcharge fee deficiency of $940 is being charged to counsel's deposit account as authorized.

In view of the above, the petition is found to comply with the requirements of 37 CFR 1.378(c).

The 3 ½ year maintenance fee in this case is hereby accepted and the above-identified patent is reinstated as of the mail date of this decision.

It is noted that on March 11, 2010 petitioner submitted a duplicate copy of the present petition, including the fee payment of $1,680. Accordingly, the $1,680 overpaid is being credited counsel's deposit account.

Telephone inquiries concerning this matter may be directed to the undersigned at (571) 272-3204.

Sherry D. Brinkley
Petitions Examiner
Office of Petitions

UNITED STATES PATENT AND TRADEMARK OFFICE

COMMISSIONER FOR PATENTS
UNITED STATES PATENT AND TRADEMARK OFFICE
P.O. BOX 1450
ALEXANDRIA, VA 22313-1450
WWW.USPTO.GOV

Paper No. None

David M. Carter
Carter, DeLuca, Farrell & Schmidt, LLP
Suite 225
445 Broad Hollow Road
Melville NY 11747

COPY MAILED

APR 14 2004

OFFICE OF PETITIONS

In re Application of :
William M. Bouverie :
Application No. 10/668,127 :
Filed: September 22, 2003 :
Attorney Docket No. 772-39 :
Title: ADJUSTABLE SENSOR :
ASSEMBLY FOR PRINTERS :

DECISION ON PETITION
UNDER 37 C.F.R. §1.182

This is a decision on the Petition under 37 C.F.R. §1.182, filed February 9, 2004, requesting that one drawing sheet containing Figure ten (10) be accorded a filing date of September 22, 2003, as part of the original disclosure.

On September 22, 2003, the above-identified application was filed. On December 16, 2003, the Office of Initial Patent Examination (OIPE) mailed a "Notice to file missing parts of nonprovisional application (notice)", stating that the application had been accorded a filing date of September 22, 2003, and advising applicant that Figure ten (10) appeared to have been omitted. The notice further indicated that an executed oath or declaration and the surcharge associated with the late filing of an oath or declaration would be required.

In response, on February 9, 2004, applicants filed the present petition. The petition is further accompanied by the petition fee, one (1) drawing sheet containing the missing figure, and a copy of Petitioner's itemized postcard.

Receipt of the declaration and the surcharge associated with the late filing of the same is acknowledged.

Upon review of the record, Figure ten (10) has not been located among the application papers. Petitioner has included a copy of his return postcard, which indicates that eight (8) sheets of drawings were filed with the Office on September 22, 2003. As Petitioner would like the Office to hold that nine (9) sheets of drawings were included on filing, this presents a bit of a problem. Petitioner explains that there was an error on both the postcard receipt and the Utility Patent Application Transmittal sheet, and that both should have indicated that nine (9) sheets of drawings were filed.

It is noted that the Utility Patent Application Transmittal sheet also states that eight (8) sheets of drawings were included on filing.

The argument and evidence presented are not persuasive.

Regarding the petitioner's argument, the PTO file is the official record of the papers originally filed in this application. A review of the official file reveals that Figure ten (10) was not included on filing. An applicant alleging that a paper was filed in the Office and later misplaced has the burden of proving the allegation by a preponderance of the evidence.

Regarding the evidence the petitioner has submitted, both the transmittal sheet and the postcard receipt cut against petitioner's assertion that nine (9) sheets of drawings were filed in the Office on September 22, 2003. As petitioner is no doubt aware, the PTO has a well established and well publicized practice of providing a receipt for papers filed in the PTO to any applicant desiring a receipt. The practice requires that any paper for which a receipt is desired be filed in the PTO with a self-addressed postcard identifying the paper. A postcard receipt which *itemizes and properly identifies* the papers which are being filed serves as prima facie evidence of receipt in the PTO of all the items listed thereon on the date stamped thereon by the PTO[1].

Both the Utility Patent Application Transmittal and the copy of the postcard receipt supplied by the petitioner indicate that eight (8) sheets of drawings were deposited with the Office, and a review of the file has located eight (8) sheets of drawings. As such, it certainly appears that both the postcard and the Transmittal sheet correctly reflect what was filed on that day.

As such, the petition must be dismissed.

---

1 See MPEP 503.

The drawing sheet containing Figure ten (10) which was filed with the instant petition will not be entered.

The petition fee of $130.00 will not be refunded, as this petition was not necessitated by any error on the part of the Office.

A preliminary amendment requesting the entry of this sheet of drawings should be filed before first action on the merits, at which time the sheet of drawings will of course be reviewed by the Examiner for new matter[2]. The amendment is not new matter if the substance was a part of the disclosure of the prior application. If the amendment is determined to constitute new matter, petitioner will either have to amend the specification so that these materials are not required, or accept the filing date of this petition, February 9, 2004, as the date of filing for the application.

The application file is being returned to the Office of Initial Patent Examination for further processing with a filing date of September 22, 2003, using only the application papers filed on that date.

Any inquiries related to this decision should be directed to the undersigned at (703) 305-0011.

Paul Shanoski
Senior Attorney
Office of Petitions
United States Patent and Trademark Office

2 See MPEP 608.02(a).

UNITED STATES PATENT AND TRADEMARK OFFICE

UNITED STATES DEPARTMENT OF COMMERCE
United States Patent and Trademark Office
Address: COMMISSIONER FOR PATENTS
P.O. Box 1450
Alexandria, Virginia 22313-1450
www.uspto.gov

INTEL CORPORATION
c/o CPA Global
P.O. BOX 52050
MINNEAPOLIS, MN 55402

Mail Date: 04/21/2010

Applicant	: Anil K. Kumar	: DECISION ON REQUEST FOR
Patent Number	: 7606353	: RECALCULATION of PATENT
Issue Date	: 10/20/2009	: TERM ADJUSTMENT IN VIEW
Appliction No	: 10/668,137	: OF WYETH AND NOTICE OF INTENT TO
Filed	: 09/22/2003	: ISSUE CERTIFICATE OF CORRECTION
		:

The Request for Recalculation is **GRANTED** to the extent indicated.

The patent term adjustment has been determined to be **1585** days. The USPTO will *sua sponte* issue a certificate of correction reflecting the amount of PTA days determined by the recalculation.

Prior to the issuance of the certificate of correction, the USPTO will afford patentee an opportunity to be heard and request reconsideration. Accordingly, patentee has **one month or thirty (30) days**, whichever is longer, to file a request for reconsideration of this patent term adjustment calculation. See 35 U.S.C. 154(b)(3)(B)(ii) and 37 CFR 1.322(a)(4). No extensions of time will be granted under 37 CFR 1.136.

Patentee should use document code PET.OP if electronically filing a request for reconsideration of this patent term adjustment calculation. The patentee must also include the information required by 37 CFR 1.705(b)(2) and the fee required by 37 CFR 1.18(e). If patentee does not file a timely request for reconsideration of this patent term adjustment calculation including the information required by 37 CFR 1.705(b)(2) and the fee required by 37 CFR 1.18(e), the USPTO will issue a certificate of correction reflecting the PTA determination noted above.

Patentee should be aware that in order to preserve the right to review in the United States District Court for the District of Columbia of the USPTO patent term adjustment determination, patentee must ensure that he or she also take the steps required under 35 U.S.C. 154(b)(4)(A) in a timely manner. Nothing in the request for recalculation should be construed as providing an alternative time frame for commencing a civil action under 35 U.S.C. 154(b)(4)(A).

Any questions concerning this decision should be directed to the Office of Patent Legal Administration at 571-272-7702.

UNITED STATES PATENT AND TRADEMARK OFFICE

Commissioner for Patents
United States Patent and Trademark Office
P.O. Box 1450
Alexandria, VA 22313-1450
www.uspto.gov

Greenblum & Bernstein, P.L.C.
1950 Roland Clarke Place
Reston, VA 20191

COPY MAILED

MAY 1 8 2004

OFFICE OF PETITIONS

In re Application of
Steiner et al.
Application No. 10/668,145
Filed: September 24,2003
Attorney Docket No. P23913

DECISION GRANTING PETITION

This is a decision on the petition under 37 CFR 1.53, filed April 7, 2004, requesting that the above-identified application be accorded a filing date of September 24, 2003, with pages 20-21 of the specification as part of the original disclosure.

On September 24, 2003, applicants filed the above-identified application. On April 1, 2004, the Office of Initial Patent Examination mailed a Notice of Omitted Item(s) in a Nonprovisional Application, stating that the application had been accorded a filing date of September 24, 2003, and advising applicants that pages 20-21 of the specification appeared to have been omitted.

In response, on April 7, 2004, applicants filed the present petition and a copy of applicants' postcard receipt acknowledging receipt of "Specification: 22 pages (w/abstract)." Additionally, applicants submitted a copy of pages 20-21 of the specification with the present petition.

Upon review of the record, pages 20-21, deposited on September 24, 2003, have not been located among the application papers. However, the evidence is convincing that the application papers deposited on September 24, 2003, included pages 20-21 of the specification, which was subsequently misplaced in the United States Patent and Trademark Office. Therefore, the application, including pages 20-21 of the specification, was complete on filing and will be granted a filing date of September 24, 2003.

Accordingly, the petition is granted. The Notice of Omitted Item(s) in a Nonprovisional Application was sent in error and is hereby vacated. The $130.00 petition fee will be refunded to Deposit Account No. 19-0089.

The application will be processed with a filing date of September 24, 2003, using pages 20-21 of the specification submitted on petition.

Any inquiries related to this decision should be directed to the undersigned at (703) 306-5589.

Christina Tartera Donnell

Christina Tartera Donnell
Senior Petitions Attorney
Office of Petitions

UNITED STATES PATENT AND TRADEMARK OFFICE

Commissioner for Patents
United States Patent and Trademark Office
P.O. Box 1450
Alexandria, VA 22313-1450
www.uspto.gov

APR - 9 2007

Charles Gorenstein
Birch, Stewart, Kolash & Birch, LLP
8110 Gatehouse Road, Suite 100 East
P.O. Box 747
Falls Church, Virginia 22040-0747

In re Application of Takafuji et al.	:	
Application Number : 10/668,186	:	DECISION ON
Filed: September 24, 2003	:	PETITION TO
Attorney Docket Number: 1248-0673P	:	WITHDRAW
For: Single-Crystal Silicon Substrate, SOI Substrate, Semiconductor Device, Display Device, And Manufacturing Method of Semiconductor Device	:	FINALITY

This decision is in response to petitioner's "PETITION UNDER 37 C.F.R. § 1.181 WITHDRAWAL OF FINALITY OF OUTSTANDING OFFICE ACTION" filed 5 December 2006, to invoke the supervisory authority of the Director of the USPTO to review the action of the examiner in the above-identified application. The petition is before the Director of Technology Center 2800 for review.

The petition is **GRANTED** to the extent indicated below.

The final rejection mailed 5 December 2006 introduced a new ground of rejection that was not necessitated by the petitioner's amendment filed 8 May 2006. Claim 22 was originally indicated as being allowable over the cited art of record in the office action mailed 7 February 2006. A new ground of rejection was made in the final rejection mailed 5 October 2006 and the allowability of claim 22 was withdrawn. Claim 22 was not amended by the petitioner and therefore did not necessitate the new grounds of rejection. The finality will be withdrawn, the Office will send out a non-final office action and the shorten statutory period will be restarted.

Sharon A. Gibson, Director
Technology Center 2800 – Semiconductors, Electrical and Optical Systems and Components

2133

UNITED STATES PATENT AND TRADEMARK OFFICE

COMMISSIONER FOR PATENTS
UNITED STATES PATENT AND TRADEMARK OFFICE
P.O. BOX 1450
ALEXANDRIA, VA 22313-1450
www.uspto.gov

BIRCH STEWART KOLASCH & BIRCH
PO BOX 747
FALLS CHURCH VA 22040-0747

COPY MAILED

JAN 23 2004

OFFICE OF PETITIONS

In re Application of
Steve Lee et al.
Application No. 10/668,220
Filed: September 24, 2003
Attorney Docket No. 0941-0844P

DECISION REFUSING STATUS
UNDER 37 CFR 1.47(a)

This is in response to the petition filed under 37 CFR 1.47(a) on September 24,- 2003.

The petition is **DISMISSED**.

Rule 47 applicant is given TWO MONTHS from the mailing date of this decision to respond, correcting the below-noted deficiencies. Any response should be entitled "Request for Reconsideration of Petition Under 37 CFR 1.47(a). and may include an oath or declaration executed by the inventor. **Failure to respond will result in abandonment of the application**. Any extensions of time will be governed by 37 CFR 1.136(a).

The above-identified application was filed on September 24, 2003, with a declaration naming Steve Lee and Donnie Wu as joint inventors and signed by inventor Lee only. The present petition was also filed on September 9, 2003 requesting status under 37 CFR 1.47 claiming that joint inventor Wu could not be located.

A grantable petition under 37 CFR 1.47(a) requires: (1) proof that the non-signing inventor cannot be reached or refuses to sign the oath or declaration after having been presented with the application papers (specification, claims and drawings); (2) an acceptable oath or declaration in compliance with 35 U.S.C. §§ 115 and 116; (3) the petition fee; and (4) a statement of the last known address of the non-signing inventor. Applicant lacks items (1) set forth above.

The present petition lacks items (1).

Petitioners must present a showing that diligent efforts have been made to locate the non-signing inventor.[1] No evidence has been presented, only a statement that proof of the pertinent facts regarding the unavailability of the non signing inventor would be filed. It is averred that such statement would set forth that a diligent effort was made to reach Donnie Wu.

Until such time as pertinent facts regarding the diligent efforts made to reach Donnie Wu has been presented, status under 37 CFR 1.47 will not be accorded.

Further correspondence with respect to this matter should be addressed as follows:

By mail: Assistant Commissioner for Patents
Box DAC
Washington, D.C. 20231

By FAX: (703) 872-9306

Telephone inquiries concerning this matter may be directed to the undersigned Petitions Attorney at (703)305-4497.

Patricia Faison-Ball

Patricia Faison-Ball
Senior Petitions Attorney
Office of Petitions

[1] MPEP 409.03(d).

UNITED STATES PATENT AND TRADEMARK OFFICE

Commissioner for Patents
United States Patent and Trademark Office
P.O. Box 1450
Alexandria, VA 22313-1450
www.uspto.gov

BIRCH STEWART KOLASCH & BIRCH
PO BOX 747
FALLS CHURCH, VA 22040-0747

COPY MAILED

OCT 17 2006

OFFICE OF PETITIONS

In re Application of
Steve Lee et al.
Application No. 10/668,220
Filed: September 24, 2003
Attorney Docket No. 0941-0844P

DECISION ACCORDING STATUS
UNDER 37 CFR 1.47(a)

This is in response to the request for reconsideration filed March 23, 2004, under 37 CFR 1.47(a).

The petition is **GRANTED**.

The above-identified application was filed on September 24, 2003 with a petition to accord status under 37 CFR 1.47 because while joint inventor Steve Lee had signed the oath or declaration, joint inventor Donnie Wu refused to do so. The petition filed with the application was dismissed in a decision mailed January 23, 2004 because no proof was presented to support the claim that non-signing inventor Wu refused to execute the oath or declaration..

A grantable petition under 37 CFR 1.47(a) requires:

(1) proof that the non-signing inventor cannot be reached or refuses to sign the oath or declaration after having been presented with the application papers (specification, claims and drawings);

(2) an acceptable oath or declaration in compliance with 35 U.S.C. §§ 115 and 116;

(3) the petition fee; and

(4) a statement of the last known address of the non-signing inventor.

In response to the decision dismissing the petition filed with the application, the instant renewed petition establishes that Mr. Wu verbally refused to cooperate with the filing of the instant application in a telephone conversation with joint inventor Lee.

All requirements under 37 CFR 1.47(a) therefore having been met, as provided in Rule 1.47(c), this Office will forward notice of this application's filing to the non-signing inventors at the addresses given in the petition. Notice of the filing of this application will also be published in the Official Gazette.

This matter is being referred to the Office of Initial Patent Examination for further pre-examination processing.

Telephone inquiries related to this decision should be directed to the undersigned Petitions Attorney at (571) 272-3212.

Patricia Faison-Ball

Patricia Faison-Ball
Senior Petitions Attorney
Office of Petitions

UNITED STATES PATENT AND TRADEMARK OFFICE

Commissioner for Patents
United States Patent and Trademark Office
P.O. Box 1450
Alexandria, VA 22313-1450
www.uspto.gov

ERIC ROBINSON
PMB 955
21010 SOUTHBANK ST.
POTOMAC FALLS VA 20165

COPY MAILED

AUG 14 2005

OFFICE OF PETITIONS

ON PETITION

In re Application of	:
Mitsuaki Osame et al	:
Application No. 10/668,247	:
Filed: September 24, 2003	:
Attorney Docket No. 0756-7202	:

This is a decision on the petition, filed August 12, 2005, under 37 CFR 1.313(c)(2) to withdraw the above-identified application from issue after payment of the issue fee.

The petition is **GRANTED.**

The above-identified application is withdrawn from issue for consideration of a submission under 37 CFR 1.114 (request for continued examination). See 37 CFR 1.313(c)(2).

Petitioner is advised that the issue fee paid on July 13, 2005 in the above-identified application cannot be refunded. If, however, the above-identified application is again allowed, petitioner may request that it be applied towards the issue fee required by the new Notice of Allowance.[1]

Telephone inquiries should be directed to the undersigned at (571) 272-3208.

The examiner of Technology Center AU 2819 will consider the request for continued examination under 37 CFR 1.114.

Karen Creasy

Karen Creasy
Petitions Examiner
Office of Petitions
Office of the Deputy Commissioner
for Patent Examination Policy

---

[1] The request to apply the issue fee to the new Notice may be satisfied by completing and returning the new Issue Fee Transmittal Form PTOL-85(b), which includes the following language thereon: "Commissioner for Patents is requested to apply the Issue Fee and Publication Fee (if any) or re-apply any previously paid issue fee to the application identified above." Petitioner is advised that, whether a fee is indicated as being due or not, the Issue Fee Transmittal Form **must** be completed and timely submitted to avoid abandonment. Note the language in bold text on the first page of the Notice of Allowance and Fee(s) Due (PTOL-85).

UNITED STATES PATENT AND TRADEMARK OFFICE

COMMISSIONER FOR PATENTS
UNITED STATES PATENT AND TRADEMARK OFFICE
P.O. BOX 1450
ALEXANDRIA, VA 22313-1450
www.uspto.gov

Paper No. _____

Date : August 15, 2005

TO : Director, Office of Patent Publication

FROM : Office of the Deputy Commissioner
for Patent Examination Policy

SUBJECT : Withdrawal from Issue of

Applicant(s) :Mitsuaki Osame et al
Application No. :10/668,247
Filed :September 24, 2003

The above-identified application has been assigned Patent No. 6,933,913 and an issue date of August 23, 2005.

It is hereby directed that this application be withdrawn from issue at the request of the applicant.

Do not refund the issue fee.

The following erratum should be published in the Official Gazette if the above-identified application is published in the OG of August 23, 2005:

"All reference to Patent No. 6,933,913 to Mitsuaki Osame et al of Japan for CLOCKED INVERTER, NAND, NOR AND SHIFT REGISTER appearing in the Official Gazette of August 23, 2005 should be deleted since no patent was granted."

Karen Creasy

Karen Creasy
Petitions Examiner
Office of Petitions
Office of the Deputy Commissioner
for Patent Examination Policy

cc: Paul Harrison, MDW-4B03,(FAX-273-5468)
Deneise Boyd, MDE-3D39 (FAX-273-5124)
Mary Louise McAskill, ST-8C15 (FAX 305-4372)
Niomi Farmer, ST-8C14 (FAX-305-4372)
Mary E. Johnson (Cookie), MDE-7C71 (FAX 273-0038
Duane Davis P/OPC MDE-7D89
Tamara Greene, ST-8C13

UNITED STATES PATENT AND TRADEMARK OFFICE

COMMISSIONER FOR PATENTS
UNITED STATES PATENT AND TRADEMARK OFFICE
P.O. BOX 1450
ALEXANDRIA, VA 22313-1450
www.uspto.gov

PRAXAIR, INC.
LAW DEPARTMENT – M1 557
39 OLD RIDGEBURY ROAD
DANBURY, CT 06810-5113

COPY MAILED
AUG 29 2008

In re Application of :
Thomas J. Hunt et al :
Application No. 10/668,255 : ON PETITION
Filed: September 24, 2003 :
Attorney Docket No. 21256 :

This is a decision on the petition under 37 CFR 1.137(b), filed April 28, 2008, to revive the above-identified application.

The petition is **DISMISSED.**

Any request for reconsideration of this decision must be submitted within TWO (2) MONTHS from the mail date of this decision. Extensions of time under 37 CFR 1.136(a) are permitted. The reconsideration request should include a cover letter entitled "**Renewed Petition under 37 CFR 1.137(b)**." This is **not** final agency action within the meaning of 5 U.S.C. § 704.

A grantable petition under 37 CFR 1.137(b) must be accompanied by: (1) the required reply, unless previously filed; (2) the petition fee as set forth in 37 CFR 1.17(m); (3) a statement that the entire delay in filing the required reply from the due date for the reply until the filing of a grantable petition pursuant to 37 CFR 1.137(b) was unintentional; and (4) any terminal disclaimer (and fee as set forth in 37 CFR 1.20(d)) required by 37 CFR 1.137(c). Where there is a question as to whether either the abandonment or the delay in filing a petition under 37 CFR 1.137 was unintentional, the Commissioner may require additional information. See MPEP 711.03(c)(III)(C) and (D). The instant petition lack(s) item(s) (1).

The application became abandoned for failure to timely file a reply within the meaning of 37 CFR 1.113 to the final Office action of January 8, 2007. The proposed reply required for consideration of a petition to revive must be a Notice of Appeal (and appeal fee required by 37 CFR 41.20(b)(2)), an amendment that *prima facie* places the application in condition for allowance, a Request for Continued Examination (RCE) and submission (37 CFR 1.114), or the filing of a continuing application under 37 CFR 1.53(b). *See* MPEP 711.03(c)(III)(A)(2). Since the amendment submitted does not *prima facie* place the application in condition for allowance, the reply required must be a Notice of Appeal (and appeal fee), RCE, or the filing of a continuing application under 37 CFR 1.53(b).

Further correspondence with respect to this matter should be addressed as follows:

By mail: Mail Stop PETITION
Commissioner for Patents
Post Office Box 1450
Alexandria, VA 22313-1450

By hand: Customer Service Window
Randolph Building
401 Dulany Street
Alexandria, VA 22314

By facsimile: (571) 273-8300
ATTN: Office of Petitions

Telephone inquiries concerning this decision should be directed to the undersigned at (571) 272-3210.

Irvin Dingle
Petitions Examiner
Office of Petitions

Attachment: Advisory Action

Advisory Action Before the Filing of an Appeal Brief	Application No.	Applicant(s)	
	10/668,255	HUNT ET AL.	
	Examiner	Art Unit	
	KILEY STONER	1793	

--The MAILING DATE of this communication appears on the cover sheet with the correspondence address --

THE REPLY FILED 28 April 2008 FAILS TO PLACE THIS APPLICATION IN CONDITION FOR ALLOWANCE.

1. ☒ The reply was filed after a final rejection, but prior to or on the same day as filing a Notice of Appeal. To avoid abandonment of this application, applicant must timely file one of the following replies: (1) an amendment, affidavit, or other evidence, which places the application in condition for allowance; (2) a Notice of Appeal (with appeal fee) in compliance with 37 CFR 41.31; or (3) a Request for Continued Examination (RCE) in compliance with 37 CFR 1.114. The reply must be filed within one of the following time periods:
   a) ☒ The period for reply expires 6 months from the mailing date of the final rejection.
   b) ☐ The period for reply expires on: (1) the mailing date of this Advisory Action, or (2) the date set forth in the final rejection, whichever is later. In no event, however, will the statutory period for reply expire later than SIX MONTHS from the mailing date of the final rejection.

   Examiner Note: If box 1 is checked, check either box (a) or (b). ONLY CHECK BOX (b) WHEN THE FIRST REPLY WAS FILED WITHIN TWO MONTHS OF THE FINAL REJECTION. See MPEP 706.07(f).

Extensions of time may be obtained under 37 CFR 1.136(a). The date on which the petition under 37 CFR 1.136(a) and the appropriate extension fee have been filed is the date for purposes of determining the period of extension and the corresponding amount of the fee. The appropriate extension fee under 37 CFR 1.17(a) is calculated from: (1) the expiration date of the shortened statutory period for reply originally set in the final Office action; or (2) as set forth in (b) above, if checked. Any reply received by the Office later than three months after the mailing date of the final rejection, even if timely filed, may reduce any earned patent term adjustment. See 37 CFR 1.704(b).

NOTICE OF APPEAL

2. ☒ The Notice of Appeal was filed on *08 June 2007*. A brief in compliance with 37 CFR 41.37 must be filed within two months of the date of filing the Notice of Appeal (37 CFR 41.37(a)), or any extension thereof (37 CFR 41.37(e)), to avoid dismissal of the appeal. Since a Notice of Appeal has been filed, any reply must be filed within the time period set forth in 37 CFR 41.37(a).

AMENDMENTS

3. ☐ The proposed amendment(s) filed after a final rejection, but prior to the date of filing a brief, will not be entered because
   (a) ☐ They raise new issues that would require further consideration and/or search (see NOTE below);
   (b) ☐ They raise the issue of new matter (see NOTE below);
   (c) ☐ They are not deemed to place the application in better form for appeal by materially reducing or simplifying the issues for appeal; and/or
   (d) ☐ They present additional claims without canceling a corresponding number of finally rejected claims.
   NOTE: _____. (See 37 CFR 1.116 and 41.33(a)).
4. ☐ The amendments are not in compliance with 37 CFR 1.121. See attached Notice of Non-Compliant Amendment (PTOL-324).
5. ☐ Applicant's reply has overcome the following rejection(s): _____.
6. ☐ Newly proposed or amended claim(s) _____ would be allowable if submitted in a separate, timely filed amendment canceling the non-allowable claim(s).
7. ☐ For purposes of appeal, the proposed amendment(s): a) ☐ will not be entered, or b) ☐ will be entered and an explanation of how the new or amended claims would be rejected is provided below or appended.
   The status of the claim(s) is (or will be) as follows:
   Claim(s) allowed: _____.
   Claim(s) objected to: _____.
   Claim(s) rejected: _____.
   Claim(s) withdrawn from consideration: _____.

AFFIDAVIT OR OTHER EVIDENCE

8. ☐ The affidavit or other evidence filed after a final action, but before or on the date of filing a Notice of Appeal will not be entered because applicant failed to provide a showing of good and sufficient reasons why the affidavit or other evidence is necessary and was not earlier presented. See 37 CFR 1.116(e).
9. ☐ The affidavit or other evidence filed after the date of filing a Notice of Appeal, but prior to the date of filing a brief, will not be entered because the affidavit or other evidence failed to overcome all rejections under appeal and/or appellant fails to provide a showing a good and sufficient reasons why it is necessary and was not earlier presented. See 37 CFR 41.33(d)(1).
10. ☐ The affidavit or other evidence is entered. An explanation of the status of the claims after entry is below or attached.

REQUEST FOR RECONSIDERATION/OTHER

11. ☒ The request for reconsideration has been considered but does NOT place the application in condition for allowance because: See Continuation Sheet.
12. ☐ Note the attached Information *Disclosure Statement*(s). (PTO/SB/08) Paper No(s). _____
13. ☐ Other: _____.

/Kiley Stoner/
Primary Examiner, Art Unit 1793

Continuation of 11. does NOT place the application in condition for allowance because: The applicant argues that Ogata et al. does not disclose forming a backing plate with a bonding surface having a plurality of spaced-apart ridges that are disposed on and within the periphery of the bonding surface of the backing plate as set forth in independent claims 1 and 18. The examiner respectfully disagrees and maintains the position that in the broadest reasonable interpretation the ridges of Ogata et al. meet the limitations of spaced-apart ridges. The applicant also argues that the ridges in the present invention act as spacers to ensure a substantially uniform solder thickness. This argument is not commensurate in scope with the claims. Since the ridges in the bonding surface of the backing plate of Ogata et al. prevent the generation of warpage and deformation, the ridges of Ogata et al. inherently aid in forming a uniform thickness solder bonded interface. It is recommended that the applicant positively claim that the ridges act as spacers/standoffs during the soldering process so as to form a solder interface with a uniform thickness. The applicant also argues that Ogata teaching brazing and not soldering. The applicant is directed to paragraph 7, line 7 and paragraph 8, lines 6-7 of Ogata where soldering materials and temperatures are clearly taught. It should also be noted that "the interface spaces" in claim 1, line 8 lacks antecedent basis

UNITED STATES PATENT AND TRADEMARK OFFICE

Commissioner for Patents
United States Patent and Trademark Office
P.O. Box 1450
Alexandria, VA 22313-1450
www.uspto.gov

PRAXAIR, INC.
LAW DEPARTMENT – MI 557
39 OLD RIDGEBURY ROAD
DANBURY, CT 06810-5113

COPY MAILED
JAN 12 2009

In re Application of :
Thomas J. Hunt et al :
Application No. 10/668,255 : ON PETITION
Filed: September 24, 2003 :
Attorney Docket No. 21256 :

This is a decision on the renewed petition under the unintentional provisions of 37 CFR 1.137(b), filed September 11, 2008, to revive the above-identified application.

The petition is **GRANTED.**

The application became abandoned for failure to timely file a reply within the meaning of 37 CFR 1.113 to the final Office action of January 8, 2007. The proposed reply required for consideration of a petition to revive must be a Notice of Appeal (and appeal fee required by 37 CFR 41.20(b)(2), an amendment that prima facie places the application in condition for allowance, a Request for Continued Examination and submission (37 CFR 1.114), or the filing of a continuing application under 37 CFR 1.53(b). See MPEP 711.03(c)(III)(A)(2). A Two-month extension of time pursuant to the provisions of 37 CFR 1.136(a) was obtained. Accordingly, the date of abandonment of this application is June 9, 2007.

The petition satisfies the requirements of 37 CFR 1.137(b) in that petitioner has supplied (1) the reply in the form of a Request for Continued Examination (RCE) and fee of $810 and the submission required by 37 CFR 1.114; (2) the petition fee of $1540; and (3) a proper statement of unintentional delay.

Telephone inquiries concerning this decision should be directed to the undersigned at (571) 272-3210.

This application is being referred to Technology Center AU 1793 for processing of the RCE and for appropriate action by the Examiner in the normal course of business on the amendment submitted in accordance with 37 CFR 1.114.

Irvin Dingle
Petition Examiner
Office of Petitions

UNITED STATES PATENT AND TRADEMARK OFFICE

Commissioner for Patents
United States Patent and Trademark Office
P.O. Box 1450
Alexandria, VA 22313-1450
www.uspto.gov

VOLENTINE FRANCOS, & WHITT PLLC
ONE FREEDOM SQUARE
11951 FREEDOM DRIVE SUITE 1260
RESTON VA 20190

COPY MAILED

SEP 01 2005

OFFICE OF PETITIONS

In re Application of :
MACHIDA :
Application No. 10/668,257 :
Filed: September 24, 2003 :
Attorney Docket No. OKI.572 :

DECISION
ON PETITION

This is a decision on the petition under 37 CFR 1.137(b), filed August 11, 2005, to revive the above-identified application.

The petition is **GRANTED**.

The application became abandoned for failure to reply in a timely manner to the Restriction Requirement mailed November 17, 2004, which set a shortened statutory period for reply of thirty (30) days. No extensions of time under the provisions of 37 CFR 1.136(a) were obtained. Accordingly, the application became abandoned on December 18, 2004.

The petition satisfies the conditions for revival pursuant to the provisions of 37 CFR 1.137(b) in that (1) the reply in the form of a Response to Restriction Requirement; (2) the petition fee of $1500; and (3) the required statement of unintentional delay have been received. Accordingly, the reply to the restriction requirement of November 17, 2004 is accepted as having been unintentionally delayed.

Telephone inquiries concerning this decision should be directed to Denise Pothier at (571) 272-4787.

The application matter is being forwarded to Technology Center Art Unit 2822.

Frances Hicks
Petitions Examiner
Office of Petitions

UNITED STATES PATENT AND TRADEMARK OFFICE

Commissioner for Patents
United States Patent and Trademark Office
P.O. Box 1450
Alexandria, VA 22313-1450
www.uspto.gov

PI-LIANG WU
P.O. BOX 55-124
TAICHUNG,
TAIWAN

AIRMAIL

COPY MAILED

FEB 28 2006

OFFICE OF PETITIONS

In re Application of	:	
Pi-Liang Wu	:	
Application No. 10/668,270	:	ON PETITION
Filed: September 24, 2003	:	
For: AUXILIARY SOLDERING TOOL	:	

This is a decision on the petition under 37 CFR 1.137(b), filed December 27, 2005, to revive the above-identified application.

The petition is **GRANTED**.

The above-identified application became abandoned for failure to reply in a timely manner to the Notice of Non-compliant Amendment (37 CFR 1.121)(Notice) mailed March 2, 2005. The Notice set a period for reply of two (2) months from the mail date of the Notice. No extensions of time under the provisions of 37 CFR 1.136(a) were obtained. Accordingly, the above-identified application became abandoned on May 3, 2005.

The petition satisfies the conditions for revival pursuant to the provisions of 37 CFR 1.137(b) in that (1) the reply in the form of an amendment; (2) the petition fee; and (3) the required statement of unintentional delay have been received. Accordingly, the reply to the Notice of March 2, 2005 is accepted as having been unintentionally delay.

Telephone inquiries concerning this decision should be directed to Wan Laymon at (571) 272-3220.

This matter is being referred to Technology Center AU 1725.

Wan Laymon

Wan Laymon
Petitions Examiner
Office of Petitions

UNITED STATES PATENT AND TRADEMARK OFFICE

Commissioner for Patents
United States Patent and Trademark Office
P.O. Box 1450
Alexandria, VA 22313-1450
www.uspto.gov

OLIFF & BERRIDGE, PLC
P.O. BOX 19928
ALEXANDRIA VA 22320

COPY MAILED
JUL 13 2006
OFFICE OF PETITIONS

In re Application of	:	
Taira, Hiroshi	:	
Application No. 10/668,292	:	DECISION ON PETITION
Filed: September 24, 2003	:	
Attorney Docket No. 117303	:	

This is a decision on the petition, filed September 7, 2005, which is being treated as a petition under 37 CFR 1.181 (no fee) requesting withdrawal of the holding of abandonment in the above-identified application.

The petition is **GRANTED**.

This application was held abandoned for failure to reply to the non-final Office action mailed December 1, 2004, which set a three (3) month shortened statutory period for reply. A Notice of Abandonment was mailed on August 23, 2005.

Petitioner asserts that the Office action dated December 1, 2004, was not received.

A review of the written record indicates no irregularity in the mailing of the Office action, and, in the absence of any irregularity, there is a strong presumption that the Office action was properly mailed to the practitioner at the address of record. This presumption may be overcome by a showing that the Office action was not in fact received. In this regard, the showing required to establish the failure to receive the Office action must consist of the following:

1. a statement from practitioner stating that the Office action was not received by the practitioner;

2. a statement from the practitioner attesting to the fact that a search of the file jacket and docket records indicates that the Office action was not received; and

3. a copy of the docket record where the non-received Office action would have been entered had it been received must be attached to and referenced in the practitioner's statement.

See MPEP § 711.03(c) under subheading "Petition to Withdraw Holding of Abandonment Based on Failure to Receive Office Action," and "Withdrawing the Holding of Abandonment When Office Actions Are Not Received," 1156 Official Gazette 53 (November 16, 1993).

The petition satisfies the above-stated requirements. Accordingly, the application was not abandoned in fact.

In view of the above, the Notice of Abandonment is hereby vacated and the holding of abandonment withdrawn.

This application is being referred to the Technology Center technical support staff of Art Unit 2853 for re-mailing the Office action of December 1, 2004. The period for reply will run from the mailing date of the Office action.

Liana Chase
Petitions Examiner
Office of Petitions

UNITED STATES PATENT AND TRADEMARK OFFICE

Commissioner for Patents
United States Patent and Trademark Office
P.O. Box 1450
Alexandria, VA 22313-1450
www.uspto.gov

HUNTON & WILLIAMS LLP
INTELLECTUAL PROPERTY DEPARTMENT
1900 K STREET, N.W.
SUITE 1200
WASHINGTON DC 20006-1109

COPY MAILED

JUL 11 2006

OFFICE OF PETITIONS

In re Application of	:	
Cole et al.	:	DECISION ON PETITION
Application No. 10/668,297	:	TO MAKE SPECIAL
Filed: September 24, 2003	:	37 CFR 1.102(D)
Attorney Docket No. 53394.000720	:	

This is a decision on the petition under 37 CFR §1.102(d), filed June 22, 2004, to make the above-identified application special based on actual infringement as set forth in M.P.E.P. § 708.02, Section II.

The petition is **DISMISSED.**

A grantable petition to make an application special under 37 CFR §1.102(d) and MPEP §708.02, Section II: Infringement, must be accompanied by the required fee pursuant to 37 CFR 1.17(h) and a statement by the applicant, assignee, or attorney/agent registered to practice before the office alleging:

> (A) That there is an infringing device or product actually on the market or method in use;
>
> (B) That a rigid comparison of the alleged infringing device, product, or method with the claims of the application has been made, and that, in his or her opinion, some of the claims are unquestionably infringed; and
>
> (C) That he or she has made or caused to be made a careful and thorough search of the prior art or has a good knowledge of the pertinent prior art.
>
> Applicant must provide one copy of each of the references deemed most closely related to the subject matter encompassed by the claims if said references are not already of record.

The instant petition fails to meet the requirements set forth above for special status because it lacks item (A). Though petition alluded to an infringing device or product actually being on the market, the specific statement as listed above was not incorporated into the petition.

Further correspondence with respect to this matter should be addressed as follows:

By Mail: Mail Stop PETITION
Commissioner for Patents
P. O. Box 1450
Alexandria, VA 22313-1450

By hand: U. S. Patent and Trademark Office
Customer Service Window, Mail Stop Petitions
Randolph Building
401 Dulany Street
Alexandria, VA 22314

By FAX: (571) 273-8300

Telephone inquiries concerning this decision should be directed to Petitions Examiner Liana Chase at 571-272-3206.

All other inquiries concerning either the examination or status of the application should be directed to the Technology Center.

The application is being forwarded to the Technology Center Art Unit 3761 for action in its regular turn.

David Bucci
Petitions Examiner
Office of Petitions

UNITED STATES PATENT AND TRADEMARK OFFICE

Commissioner for Patents
United States Patent and Trademark Office
P.O. Box 1450
Alexandria, VA 22313-1450
www.uspto.gov

KARI BARTINGALE
SHUMAKER & SIEFFERT, PA
1625 RADIO DRIVE
SUITE 300
WOODBURY, MN 55125

COPY MAILED

NOV 05 2007

OFFICE OF PETITIONS

In re Application of	:	
Ellen K. Richardson	:	
Application No. 10/688,311	:	DECISION ON PETITION
Filed: October 16, 2003	:	TO WITHDRAW
Attorney Docket No. 1084-001US01	:	FROM RECORD
	:	

This is a decision on the Request to Withdraw as attorney or agent of record under 37 C.F.R. § 1.36(b) filed June 29, 2007.

The request is **DISMISSED** as moot.

A review of the file record indicates that the power of attorney to Shumaker & Sieffert, PA has been revoked by the assignee of the patent application on October 12, 2007. Accordingly, the request to withdraw under 37 C.F.R. § 1.36(b) is moot.

All future communications from the Office will continue to be directed to the below-listed address until otherwise notified by applicant.

Telephone inquires concerning this decision should be directed to undersigned at 571-272-1642.

April M. Wise
Petitions Examiner
Office of Petitions

cc: MARTIN & HENSON, PC
9250 WEST FIFTH AVENUE
SUITE 200
LAKEWOOD, CO 80226

UNITED STATES PATENT AND TRADEMARK OFFICE

Commissioner for Patents
United States Patent and Trademark Office
P.O. Box 1450
Alexandria, VA 22313-1450
www.uspto.gov

SUGHRUE MION, PLLC
2100 PENNSYLVANIA AVENUE, N.W.
SUITE 800
WASHINGTON, DC 20037

COPY MAILED
NOV 17 2004
OFFICE OF PETITIONS

In re Application of
Kunihiko Kodama
Application No. 10/668,348
Filed: September 24, 2003
Attorney Docket No. Q77664

ON PETITION

This is a decision on the petition, filed November 16, 2004, which is being treated as a petition under 37 CFR 1.313(c)(2) to withdraw the above-identified application from issue after payment of the issue fee.

The petition is **GRANTED**.

The above-identified application is withdrawn from issue for consideration of a submission under 37 CFR 1.114 (request for continued examination). See 37 CFR 1.313(c)(2).

Petitioner is advised that the issue fee paid on November 3, 2004 in the above-identified application cannot be refunded. If, however, the above-identified application is again allowed, petitioner may request that it be applied towards the issue fee required by the new Notice of Allowance.[1]

Telephone inquiries should be directed to Irvin Dingle at (571) 272-3210.

This matter will be forwarded to Technology Center AU 1752 for processing of the request for continued examination under 37 CFR 1.114 and for consideration of the concurrently filed Information Disclosure Statement.

Irvin Dingle
Petitions Examiner
Office of Petitions
Office of the Deputy Commissioner
for Patent Examination Policy

---

[1] The request to apply the issue fee to the new Notice may be satisfied by completing and returning the new Issue Fee Transmittal Form PTOL-85(b), which includes the following language thereon: Commissioner for Patents is requested to apply the Issue Fee and Publication Fee (if any) or re-apply any previously paid issue fee to the application identified above. Petitioner is advised that, whether a fee is indicated as being due or not, the Issue Fee Transmittal Form **must** be completed and timely submitted to avoid abandonment. Note the language in bold text on the first page of the Notice of Allowance and Fee(s) Due (PTOL-85).

UNITED STATES PATENT AND TRADEMARK OFFICE

Commissioner for Patents
United States Patent and Trademark Office
P.O. Box 1450
Alexandria, VA 22313-1450
www.uspto.gov

EUGENE J.A. GIERCZAK
SUITE 2500
20 QUEEN STREET WEST
TORONTO ON M5H 3S1 CA CANADA

COPY MAILED

AUG 23 2007

OFFICE OF PETITIONS

In re Application of :
Saed Sayad :
Application No. 10/668,354 :
Filed: September 24, 2003 :
Attorney Docket No. 059108-0001 :

ON PETITION

This is a decision on the petition under 37 CFR 1.137(b), filed June 19, 2007, to revive the above-identified application.

The petition is **GRANTED**.

The above-identified application became abandoned for failure to reply in a timely manner to the non-final Office action mailed May 31, 2006, which set a shortened statutory period for reply of three (3) months. No extension of time under the provisions of 37 CFR 1.136(a) were obtained. Accordingly, the above-identified application became abandoned on September 1, 2006.

The file does not indicate a change of address has been submitted, although the address given on the petition differs from the address of record. If appropriate, a change of address should be filed in accordance with MPEP 601.03. A courtesy copy of this decision is being mailed to the address given on the petition; however, the Office will mail all future correspondence solely to the address of record.

Telephone inquiries concerning this decision should be directed to Irvin Dingle at (571) 272-3210. This matter is being referred to Technology Center AU 2129 for further processing.

Irvin Dingle
Petitions Examiner
Office of Petitions

cc: Eugene J.A. Gierczak
Miller Thomson LLP
40 King St. W.
Toronto ON Canada M5H 3S1

UNITED STATES PATENT AND TRADEMARK OFFICE

UNITED STATES DEPARTMENT OF COMMERCE
United States Patent and Trademark Office
Address: COMMISSIONER FOR PATENTS
P.O. Box 1450
Alexandria, Virginia 22313-1450
www.uspto.gov

NIXON & VANDERHYE, PC
901 NORTH GLEBE ROAD, 11TH FLOOR
ARLINGTON, VA 22203

Mail Date: 04/21/2010

Applicant	: Masayuki Takahashi	: DECISION ON REQUEST FOR
Patent Number	: 7609418	: RECALCULATION of PATENT
Issue Date	: 10/27/2009	: TERM ADJUSTMENT IN VIEW
Appliction No	: 10/668,378	: OF WYETH AND NOTICE OF INTENT TO
Filed	: 09/24/2003	: ISSUE CERTIFICATE OF CORRECTION
		:

The Request for Recalculation is **GRANTED** to the extent indicated.

The patent term adjustment has been determined to be **1798** days. The USPTO will *sua sponte* issue a certificate of correction reflecting the amount of PTA days determined by the recalculation.

Prior to the issuance of the certificate of correction, the USPTO will afford patentee an opportunity to be heard and request reconsideration. Accordingly, patentee has **one month or thirty (30) days**, whichever is longer, to file a request for reconsideration of this patent term adjustment calculation. See 35 U.S.C. 154(b)(3)(B)(ii) and 37 CFR 1.322(a)(4). No extensions of time will be granted under 37 CFR 1.136.

Patentee should use document code PET.OP if electronically filing a request for reconsideration of this patent term adjustment calculation. The patentee must also include the information required by 37 CFR 1.705(b)(2) and the fee required by 37 CFR 1.18(e). If patentee does not file a timely request for reconsideration of this patent term adjustment calculation including the information required by 37 CFR 1.705(b)(2) and the fee required by 37 CFR 1.18(e), the USPTO will issue a certificate of correction reflecting the PTA determination noted above.

Patentee should be aware that in order to preserve the right to review in the United States District Court for the District of Columbia of the USPTO patent term adjustment determination, patentee must ensure that he or she also take the steps required under 35 U.S.C. 154(b)(4)(A) in a timely manner. Nothing in the request for recalculation should be construed as providing an alternative time frame for commencing a civil action under 35 U.S.C. 154(b)(4)(A).

Any questions concerning this decision should be directed to the Office of Patent Legal Administration at 571-272-7702.

UNITED STATES PATENT AND TRADEMARK OFFICE

Commissioner for Patents
United States Patent and Trademark Office
P.O. Box 1450
Alexandria, VA 22313-1450
www.uspto.gov
DIW 07-04

RABIN & Berdo, PC
1101 14TH STREET, NW
SUITE 500
WASHINGTON DC 20005

COPY MAILED

JUL 21 2004

OFFICE OF PETITIONS

In re Application of	:
Noguchi, Terada, Ohashi, and	:
Komazaki	: DECISION REFUSING STATUS
Application No. 10/668,379	: UNDER 37 CFR 1.47(a)
Filed: 24 September, 2003	:
Attorney Docket No. OKI 377	:

This is in response to the petition under 37 CFR 1.47(a)[1] filed on 9 June, 2004.

The petition is **DISMISSED**.

Rule 47 applicant is given TWO MONTHS from the mailing date of this decision to reply, correcting the below-noted deficiencies. Any reply should be entitled "Request for Reconsideration of Petition Under 37 CFR 1.47(a)," and should only address the deficiencies noted below, except that the reply may include an oath or declaration executed by the non-signing inventor. **FAILURE TO RESPOND WILL RESULT IN ABANDONMENT OF THE APPLICATION.** Extensions of time may be obtained in accordance with 37 CFR 1.136(a).

On 24 September, 2003, the above-identified application was filed.

Accordingly, on 16 December, 2003, Initial Patent Examination Division mailed a Notice to File Missing Parts of Nonprovisional Application, stating that an executed oath or declaration, the statutory basic filing fee, and a surcharge for their late filing were required.

In response, on 9 June, 2004, petitioners filed a four (4) month

---

[1] A grantable petition under 37 CFR 1.47(a) requires:

(1) proof that the non-signing inventor cannot be reached or refuses to sign the oath or declaration after having been presented with the application papers (specification, claims and drawings);

(2) an acceptable oath or declaration in compliance with 35 U.S.C. §§ 115 and 116;

(3) the petition fee; and

(4) a statement of the last known address of the non-signing inventor.

extension of time, the statutory basic filing fee and surcharge, and the present petition and petition fee. Additionally, a declaration was filed naming Kazuahige Noguchi, Satoshi Terada, Wataru Ohashi, and Tomokazu Komazaki as joint inventors and signed by all inventors except Terada on behalf of themselves and joint inventor Terada.

Petitioners assert that a copy of the application was sent to the last known address of the non-signing inventor, but that the inventor has failed to return a signed declaration.

A grantable petition under 37 CFR 1.47(a) requires:

(1) proof that the non-signing inventor cannot be reached or located, notwithstanding diligent effort, or refuses to sign the oath or declaration after having been presented with the application papers (specification, claims and drawings);

(2) an acceptable oath or declaration in compliance with 35 U.S.C. §§ 115 and 116;

(3) the petition fee;

(4) a surcharge of $130 or $65 (small entity) if the petition and/or declaration is not filed at the time of filing the application, and

(5) a statement of the last known address of the non-signing inventor.

The petition lacks item (2). The declaration is defective in that does not include a proper statement of the residence of the non-signing inventor, or the non-signing inventor's correct mailing address. With regard to the former, applicant's place of residence, that is, the city and either state or foreign contry, is required to be included in the oath or declaration.[2] Petitioners have not included the city in which the non-signing inventor resides on the declaration. With regard to the latter, it is noted that the same mailing address : that of the former employer of the non-signing inventor, has been used for three of the four inventors, including the non-signing inventor. The oath or declaration must identify the mailing address, and the residence if an inventor lives at a location which is different from where the inventor customarily receives mail, of each

---

[2] See MPEP 605.02

inventor.[3] Obviously the non-signing inventor does not receive mail at this address since, as petitioners state, he no longer is employed by Oki Electric Industry Co., Ltd. Petitioners must submit a new oath or declaration in compliance with 37 CFR 1.67 and 1.67, signed by all of the signing inventors on behalf of themselves and the nonsigning inventor, with any renewed petition.

Further correspondence with respect to this matter should be addressed as follows:

By mail: Mail Stop Petition
Commissioner for Patents
P.O. Box 1450
Alexandria, VA 22313-1450

By FAX: (703) 872-9306
Attn: Office of Petitions

OR,
for correspondence filed after 28 September, 2004:[4]

(571) 273-0025
Attn: Office of Petitions

By hand: U.S. Patent and Trademark Office
220 20th Street S.
Customer Window, Mail Stop Petition
Crystal Plaza 2, Lobby, Room 1B03
Arlington, VA 22202

Telephone inquiries related to this decision should be directed to the undersigned at 703-308-6918.

D Wood
Douglas I. Wood
Senior Petitions Attorney
Office of Petitions

---

[3] 37 CFR 1.63(c).

[4] It is anticipated that the Office of Petitions will complete its move to the new USPTO Carlysle office building in Alexandria, Virginia on or about this date.

UNITED STATES PATENT AND TRADEMARK OFFICE

Commissioner for Patents
United States Patent and Trademark Office
P.O. Box 1450
Alexandria, VA 22313-1450
www.uspto.gov
DIW 01-05

RABIN & Berdo, PC
1101 14TH STREET, NW
SUITE 500
WASHINGTON DC 20005

COPY MAILED

JAN 10 2005

OFFICE OF PETITIONS

In re Application of	:
Noguchi, Terada, Ohashi, and	:
Komazaki	: DECISION ACCORDING STATUS
Application No. 10/668,379	: UNDER 37 CFR 1.47(a)
Filed: 24 September, 2003	:
Attorney Docket No. OKI 377	:

This is in response to the renewed petition under 37 CFR 1.47(a)[1] filed on 17 November, 2004.

The petition is **GRANTED**.

Petitioners have shown that the non-signing inventor, Satoshi Terada, has refused to join in the filing of the above-identified application after having been sent a copy of the application papers. Specifically, petitioners have established, via the statement of facts by Fumitaka Yokoyama that a copy of the application was sent to the non-signing inventor, and have presented a copy of the cover letter. However, the non-signing inventor has failed to return an executed declaration listing him as a joint inventor along with Kazuahige Noguchi, Wataru Ohashi, and Tomokazu Komazaki.

The above-identified application and papers have been reviewed and found in compliance with 37 CFR 1.47(a). This application is hereby accorded Rule 1.47(a) status.

As provided in Rule 1.47(c), this Office will forward notice of this application's filing to the non-signing inventor at the

---

[1] A grantable petition under 37 CFR 1.47(a) requires:

(1) proof that the non-signing inventor cannot be reached or refuses to sign the oath or declaration after having been presented with the application papers (specification, claims and drawings);

(2) an acceptable oath or declaration in compliance with 35 U.S.C. §§ 115 and 116;

(3) the petition fee; and

(4) a statement of the last known address of the non-signing inventor.

address given in the Declaration. Notice of the filing of this application will also be published in the Official Gazette.

After this decision is mailed, the application will be forwarded to Technology Center 2817 for examination in due course.

Telephone inquiries related to this decision should be directed to the undersigned at 571-272-3231.

D Wood

Douglas I. Wood
Senior Petitions Attorney
Office of Petitions

UNITED STATES PATENT AND TRADEMARK OFFICE

Commissioner for Patents
United States Patent and Trademark Office
P.O. Box 1450
Alexandria, VA 22313-1450
www.uspto.gov
DIW 01-05

Satoshi Terada
5-18-36 Konandai Konan-ku Yokohama-shi
Kangawa 234-0054
JAPAN

COPY MAILED

JAN 1 0 2005

OFFICE OF PETITIONS

In re Application of
Noguchi et al.
Application No. 10/668,379
Filed: 24 September, 2003
For: SURFACE ACOUSTIC WAVE FILTER WITH ATTENUATION POLES

Dear Mr. Terada:

You are named as a joint inventor in the above identified United States patent application, filed under the provisions of 35 U.S.C. 116 (United States Code), and 37 CFR 1.47(a), Rules of Practice in Patent Cases. Should a patent be granted on the application you will be designated therein as a joint inventor.

As a named inventor you are entitled to inspect any paper in the file wrapper of the application, order copies of all or any part thereof (at a prepaid cost per 37 CFR 1.19) or make your position of record in the application. Alternatively, you may arrange to do any of the preceding through a registered patent attorney or agent presenting written authorization from you. If you care to join the application, counsel of record (see below) would presumably assist you. Joining in the application would entail the filing of an appropriate oath or declaration by you pursuant to 37 CFR 1.63.

Telephone inquiries regarding this communication should be directed to the undersigned at 571/272-3231. Requests for information regarding your application should be directed to the File Information Unit at 703/308-2733. Information regarding how to pay for and order a copy of the application, or a specific paper in the application, should be directed to Certification Division at 703/308-9726 or 1-800-972-6382 (outside the Washington D.C. area).

D Wood

Douglas I. Wood
Senior Petitions Attorney
Office of Petitions

RABIN & BERDO P.C.
1101 14TH STREET NW
SUITE 500
WASHINGTON DC 20005

UNITED STATES PATENT AND TRADEMARK OFFICE

Commissioner for Patents
United States Patent and Trademark Office
P.O. Box 1450
Alexandria, VA 22313-1450
www.uspto.gov

EASTMAN KODAK COMPANY
PATENT LEGAL STAFF
ROCHESTER NY 14650-2201

COPY MAILED

SEP 22 2008

OFFICE OF PETITIONS

ON PETITION

In re Application of :
Thomas K. Sciurba et al :
Application No. 10/668,417 :
Filed: September 23, 2003 :
Attorney Docket No. H10188/DPS :

This is a decision on the petition under 37 CFR 1.137(b), filed December 5, 2007, to revive the above-identified application.

The petition is **GRANTED**.

The above-identified application became abandoned for failure to reply within the meaning of 37 CFR 1.113 in a timely manner to the final Office action mailed October 2, 2006, which set a shortened statutory period for reply of three (3) months. No extension of time under the provisions of 37 CFR 1.136(a) was obtained. Accordingly, the above-identified application became abandoned on January 7, 2007.

The petition satisfies the conditions for revival pursuant to the provisions of 37 CFR 1.137(b) in that (1) the reply in the form of an amendment, a Request for Continued Examination, and the $810 filing fee; (2) the petition fee of $1540; and (3) the required statement of unintentional delay have been received. Accordingly, the reply to the final Office Action of October 2, 2006 is accepted as having been unintentionally delayed.

The petition fee and RCE fee have been charged to Deposit Account 05-0225.

Telephone inquiries concerning this decision should be directed to the undersigned at (571) 272-0602.

The application file is being referred to Technology Center AU 3653 for appropriate action on the concurrently filed Request for Continued Examination and amendment.

Thurman K. Page
Petitions Examiner
Office of Petitions

SPE RESPONSE FOR CERTIFICATE OF CORRECTION

Paper No.: 20100223-A

DATE : September 16 ,2009

TO SPE OF : ART UNIT 2882

SUBJECT : Request for certificate of correction for Appln.no. 10/668444

Please respond to this request for a certificate of correction within 7 days.

FOR IFW FILES:

Please review the requested changes/corrections as shown in the **COCIN** document(s) in the IFW application image. No new matter should be introduced, nor should the scope or meaning of the claims be changed.

Please complete the response (see below) and forward the completed response to scanning using document code **COCX**.

FOR PAPER FILES:

Please review the requested changes/corrections as shown in the attached certificate of correction. Please complete this form (see below) and forward it with the file to:

Certificates of Correction Branch (CofC)
South Tower - 9A22
Palm Location 7580

Magdalene Talley
Certificates of Correction Branch
703-308-9390 ext. 120

Thank You For Your Assistance

The request for issuing the above-identified correction(s) is hereby:
Note your decision on the appropriate box.

- [X] **Approved** — **All** changes apply.
- [ ] **Approved in Part** — Specify below which changes **do not** apply.
- [ ] **Denied** — State the reasons for denial below.

Comments: _____

/Edward J Glick/
Supervisory Patent Examiner, GAU 2882

UNITED STATES PATENT AND TRADEMARK OFFICE

UNITED STATES DEPARTMENT OF COMMERCE
United States Patent and Trademark Office
Address: COMMISSIONER FOR PATENTS
P.O. Box 1450
Alexandria, Virginia 22313-1450
www.uspto.gov

KINNEY & LANGE, P.A.
THE KINNEY & LANGE BUILDING
312 SOUTH THIRD STREET
MINNEAPOLIS, MN 55415-1002

Mail Date: 04/21/2010

Applicant	: Joseph A. Marino	: DECISION ON REQUEST FOR
Patent Number	: 7658748	: RECALCULATION of PATENT
Issue Date	: 02/09/2010	: TERM ADJUSTMENT IN VIEW
Appliction No	: 10/668,445	: OF WYETH AND NOTICE OF INTENT TO
Filed	: 09/23/2003	: ISSUE CERTIFICATE OF CORRECTION
		:

The Request for Recalculation is **GRANTED** to the extent indicated.

The patent term adjustment has been determined to be **0** days. The USPTO will *sua sponte* issue a certificate of correction reflecting the amount of PTA days determined by the recalculation.

Prior to the issuance of the certificate of correction, the USPTO will afford patentee an opportunity to be heard and request reconsideration. Accordingly, patentee has **one month or thirty (30) days**, whichever is longer, to file a request for reconsideration of this patent term adjustment calculation. See 35 U.S.C. 154(b)(3)(B)(ii) and 37 CFR 1.322(a)(4). No extensions of time will be granted under 37 CFR 1.136.

Patentee should use document code PET.OP if electronically filing a request for reconsideration of this patent term adjustment calculation. The patentee must also include the information required by 37 CFR 1.705(b)(2) and the fee required by 37 CFR 1.18(e). If patentee does not file a timely request for reconsideration of this patent term adjustment calculation including the information required by 37 CFR 1.705(b)(2) and the fee required by 37 CFR 1.18(e), the USPTO will issue a certificate of correction reflecting the PTA determination noted above.

Patentee should be aware that in order to preserve the right to review in the United States District Court for the District of Columbia of the USPTO patent term adjustment determination, patentee must ensure that he or she also take the steps required under 35 U.S.C. 154(b)(4)(A) in a timely manner. Nothing in the request for recalculation should be construed as providing an alternative time frame for commencing a civil action under 35 U.S.C. 154(b)(4)(A).

Any questions concerning this decision should be directed to the Office of Patent Legal Administration at 571-272-7702.

UNITED STATES PATENT AND TRADEMARK OFFICE

Commissioner for Patents
United States Patent and Trademark Office
P.O. Box 1450
Alexandria, VA 22313-1450
www.uspto.gov

COPY MAILED

AUG 0 6 2007

OFFICE OF PETITIONS

Jones Day
22 East 41st Street
New York, NY 10017

In re Application of

Eric Aerts
Application No. 10/668,462
Filed: September 22, 2003
Attorney Docket No. 9971-009-999

DECISION ON PETITION
TO WITHDRAW
FROM RECORD

This is a decision on the Request to Withdraw as attorney or agent of record under 37 C.F.R. § 1.36(b), filed May 11, 2007.

The request is **APPROVED**.

A grantable request to withdraw as attorney/agent of record must be signed by every attorney/agent seeking to withdraw or contain a clear indication that one attorney is signing on behalf of another/others. A request to withdraw will not be approved unless at least 30 (thirty) days would remain between the date of approval and the later of the expiration date of a time to file a response or the expiration date of the maximum time period which can be extended under 37 C.F.R. § 1.136(a).

The request was signed by Rattan Nath on behalf of all attorneys of record. All attorneys/agents associated have been withdrawn. Applicant is reminded that there is no attorney of record at this time.

The request to change the correspondence of record is not acceptable as the requested correspondence address is not that of: (1) the first named signing inventor; or (2) an intervening assignee of the entire interest under 37 C.F.R 3.71. All future communications from the Office will be directed to the first named signing inventor at the first copied address below until otherwise properly notified by the applicant.

There is no outstanding Office action at this time.

Telephone inquiries concerning this decision should be directed to Terri Williams at 571-272-2991.

Terri Williams

Terri Williams
Petitions Examiner
Office of Petitions

cc: **Eric Aerts**
134 Tuscan Road
Maplewood, NJ 07040

cc: **Dieter Kemp**
105 East 63rd Street
New York, NY 10021

UNITED STATES PATENT AND TRADEMARK OFFICE

UNITED STATES DEPARTMENT OF COMMERCE
United States Patent and Trademark Office
Address: COMMISSIONER FOR PATENTS
P.O. Box 1450
Alexandria, Virginia 22313-1450
www.uspto.gov

APPLICATION NUMBER	FILING OR 371 (c) DATE	FIRST NAMED APPLICANT	ATTY. DOCKET NO./TITLE
10/668,462	09/22/2003	Eric Aerts	9971-009-999

CONFIRMATION NO. 2334

OC000000025192387

20583
JONES DAY
222 EAST 41ST ST
NEW YORK, NY 10017

Date Mailed: 08/03/2007

NOTICE REGARDING CHANGE OF POWER OF ATTORNEY

This is in response to the Power of Attorney filed 05/11/2007.

- The withdrawal as attorney in this application has been accepted. Future correspondence will be mailed to the new address of record. 37 CFR 1.33.

Jessi Williams

Office of Initial Patent Examination (571) 272-4000, or 1-800-PTO-9199

FORMER ATTORNEY/AGENT COPY

UNITED STATES PATENT AND TRADEMARK OFFICE

Commissioner for Patents
United States Patent and Trademark Office
P.O. Box 1450
Alexandria, VA 22313-1450
www.uspto.gov

Kathy Manke
Avago Technologies Limited
4380 Ziegler Road
Fort Collins CO 80525

COPY MAILED

AUG 04 2008

In re Application of
Cavanna, et al.
Application No. 10/668,469
Filed: September 22, 2003
Attorney Docket No. 10030875-1

ON PETITION

This is a decision on the petition under 37 CFR 1.181 filed on July 11, 2008, to withdraw the holding of abandonment.

The petition is **DISMISSED**.

The application became abandoned on June 18, 2008, after no response was received to the Notice of Allowance and Issue Fee Due mailed March 17, 2008, which set a statutory period for reply of three-months from its mailing date. No response was received within the allowable period, and the application became abandoned on June 18, 2008. A Notice of Abandonment was mailed on July 8, 2008.

In the instant petition, petitioner maintains that the Notice of Allowance and Issue Fee Due was not available to petitioner until June 12, 2008, and that the period for response should be reset because most of the statutory period for reply had elapsed before the Notice was received.

Petitioner's argument is not persuasive. This issue at hand is complicated by the fact that petitioner received the Notice of Allowance and Issue Fee Due late in the statutory period set for reply, but with some time remaining in the statutory period for reply. Yet, petitioner filed no response to the notice and did not file the instant petition until July 11, 2008, even though the Notice of Allowance and Issue Fee Due was viewable on June 12, 2008, by petitioner's own admission. Section 710.06 of the Manual of Patent Examining Procedure provides, in pertinent part, that:

> The Office will grant a petition to restart the previously set period for reply to an Office action to run from the date of receipt of the Office action at the correspondence address when the following criteria are met:
>
> (A) the petition is filed within 2 weeks of the date of receipt of the Office action at the correspondence address;
>
> (B) a substantial portion of the set reply period had elapsed on the date of receipt (e.g., at least 1 month of a 2- or 3-month reply period had elapsed); and
>
> (C) the petition includes (1) evidence showing the date of receipt of the Office action at the correspondence address (e.g., a copy of the Office action having the date of receipt of the Office action at the correspondence address stamped thereon, a copy of the envelope (which contained the Office action) having the date of receipt of the Office action at the correspondence address stamped thereon, etc.), and (2) a statement setting forth the date of receipt of the Office action at the correspondence address and

> explaining how the evidence being presented establishes the date of receipt of the Office action at the correspondence address.

Arguably, the most appropriate remedy would have been for petitioner to file a petition to restart the time period running against the Notice of Allowance and Issue Fee Due immediately after receipt thereof. Instead, it appears that petitioner allowed the application to go abandoned with no further action being taken on the application until July 11, 2008, with the filing of the instant petition. A petition to withdraw the holding of abandonment is only proper where the application is improperly abandoned. It does not appear that the holding of abandonment was improper in this instance because petitioner received the Notice of Allowance and Issue Fee Due within the period set for reply and failed to respond. Further, even assuming that the Notice of Allowance and Issue Due was not viewable until June 12, 2008, petitioner did not avail himself of the remedy allowed by MPEP 710.06 cited above. Petitioner's failure to file a timely petition to restart the period for reply to the Notice of Allowance and Issue Fee Due belies petitioner's argument that the holding of abandonment should be withdrawn. The petition is dismissed, accordingly.

Alternatively, petitioner may revive the application based on unintentional abandonment under 37 CFR 1.137(b). A grantable petition pursuant to 37 CFR 1.137(b) must be accompanied by the required reply, the required petition fee ($1,540.00 for a large entity and $770.00 for a verified small entity), and a statement that the **entire** delay in filing the required reply from the due date for the reply until the filing of a grantable petition pursuant to 37 CFR 1.137(b) was unintentional.

Further correspondence with respect to this matter should be addressed as follows:

By mail: Commissioner for Patents
United States Patent and Trademark Office
Box 1450
Alexandria, VA 22313-1450

By facsimile: (571) 273-8300
Attn: Office of Petitions

Telephone inquiries concerning this decision should be directed to the undersigned (571) 272-3222.

Kenya A. McLaughlin
Petitions Attorney
Office of Petitions

UNITED STATES PATENT AND TRADEMARK OFFICE

Commissioner for Patents
United States Patent and Trademark Office
P.O. Box 1450
Alexandria, VA 22313-1450
www.uspto.gov

Kathy Manke
Avago Technologies Limited
4380 Ziegler Road
Fort Collins CO 80525

COPY MAILED

OCT 1 4 2008

OFFICE OF PETITIONS

In re Application of :
Cavanna, et al. :
Application No. 10/668,469 : ON PETITION
Filed: September 22, 2003 :
Attorney Docket No. 10030875-1

This is a decision on the petition under 37 CFR §1.137(b), September 19, 2008, in the above-identified application.

The petition is **granted**.

The application became abandoned on June 18, 2008, after no response was received to the Notice of Allowance and Issue Fee Due mailed March 17, 2008, which set a statutory period for reply of three-months from its mailing date. No response was received within the allowable period, and the application became abandoned on June 18, 2008. A Notice of Abandonment was mailed on July 8, 2008.

The issue and publication fee were received on September 19, 2008.

The application is being directed to the Office of Data Management for further processing.

Telephone inquiries concerning this decision may be directed to the undersigned at (571) 272-3222.

Kenya A. McLaughlin
Petitions Attorney
Office of Petitions

SPE RESPONSE FOR CERTIFICATE OF CORRECTION

Paper No.:20090829

DATE : August 29, 2009

TO SPE OF : ART UNIT 1621

SUBJECT : Request for Certificate of Correction on Patent No.: 7119217

A response is requested with respect to the accompanying request for a certificate of correction.

Please complete this form and return with file, within **7** days to:
Certificates of Correction Branch - ST (South Tower) 9A22
Palm location **7590** - Tel. No. (703) 305-8309

With respect to the change(s) requested, correcting Office and/or Applicant's errors, should the patent read as shown in the certificate of correction? No new matter should be introduced, nor should the scope or meaning of the claims be changed.

Thank You For Your Assistance **Certificates of Correction Branch**

The request for issuing the above-identified correction(s) is hereby:

Note your decision on the appropriated box.

☒ **Approved** All changes apply.

☐ **Approved in Part** Specify below which changes **do not** apply.

☐ **Denied** State the reasons for denial below.

Comments:

/DANIEL M SULLIVAN/
Supervisory Patent Examiner.Art Unit 1621

UNITED STATES PATENT AND TRADEMARK OFFICE

Commissioner for Patents
United States Patent and Trademark Office
P.O. Box 1450
Alexandria, VA 22313-1450
www.uspto.gov
DIW 10-04

OBLON, SPIVAK, MCCLELLAND, MAIER & NEUSTADT, P.C.
1940 DUKE STREET
ALEXANDRIA VA 22314

COPY MAILED

OCT 20 2004

OFFICE OF PETITIONS

In re Application of	:
Yanagida et al.	: DECISION GRANTING
Application No. 10/668,498	: PETITION
Filed: 24 September, 2003	:
Attorney Docket No. 242549US2	:

This is a decision on the petition filed on 27 August, 2004, which is treated as a petition filed under 37 CFR 1.53 requesting that the above-identified application, including five (5) sheets of drawings, be accorded a filing date of 24 September, 2003.

The application was filed on 24 September, 2003. Accordingly, on 20 August, 2004, Initial Patent Examination Division mailed a "Notice of Incomplete Nonprovisional Application" stating that no filing date had been assigned because the application was deposited without drawings, and requiring drawings be filed if necessary. In response, on 27 August, 2004, the present petition was filed, accompanied by five (5) sheets of drawings.

Petitioners assert that the application as filed included five (5) sheets of drawings which were misplaced after receipt at the USPTO. In support, a copy of petitioners' itemized postcard receipt was supplied. The postcard bears an Office date stamp of 24 September, 2003, identifies the application by attorney docket number, first named inventor's name, and invention title, and itemizes the filing of, *inter alia*, "Drawings 5 sheets".

A review of the record reveals that no sheets of drawings received on 24 September, 2003, are located among the application papers received on that date. However, the evidence is convincing that the application papers deposited on 24 September, 2003, included five (5) sheets of drawings, which were subsequently misplaced in the Office. Therefore, the application, including five (5) sheets of drawings, is entitled to a filing date of 24 September, 2003.

In view of the above, the petition is granted. No petition fee has been charged and none is due.

The application will be processed with the copy of the five (5) sheet of drawings supplied on 27 August, 2004, as a part of the original disclosure.

The application is being returned to Initial Patent Examination Division for further processing with a filing date of 24 September, 2003, using the application papers filed on that date, and the copy of five (5) sheets of drawings described in the specification supplied with the present petition.

Telephone inquiries should be directed to the undersigned at 571-272-3231.

D Wood

Douglas I. Wood
Senior Petitions Attorney
Office of Petitions

UNITED STATES PATENT AND TRADEMARK OFFICE

Commissioner for Patents
United States Patent and Trademark Office
P.O. Box 1450
Alexandria, VA 22313-1450
www.uspto.gov

MARK CLODFELTER
555 SPARKMAN DRIVE
SUITE 1602D
HUNTSVILLE AL 35816

COPY MAILED
OCT 0 2 2006
OFFICE OF PETITIONS

In re Application of
Ronald L. Barnes :
Application No. 10/668,504 : DECISION ON
Filed: September 23, 2003 : PETITION
Attorney Docket No. BARNESCIP7 :

This is in response to the petition to revive under 37 CFR 1.137(b), filed July 31, 2006.

The petition under 37 CFR 1.137(b) is **GRANTED**.

The above application became abandoned for failure to timely submit corrected drawings as required by the Notice of Allowability mailed on March 9, 2006. This notice set a non extendable period for reply of three months. No corrected drawings having been received, the application became abandoned on June 10, 2005. A Notice of Abandonment was mailed on July 13, 2006.

With the instant petition, petition paid the petition fee, submitted corrected drawings, and made the proper statement of unintentional delay.

The application file is being forwarded to Group Art Unit 1723 for consideration of the replacement drawings filed July 31, 2006.

Telephone inquiries related to this decision should be directed to the undersigned at 571-272-3207.

Cliff Congo
Petitions Attorney
Office of Petitions

UNITED STATES PATENT AND TRADEMARK OFFICE

Commissioner for Patents
United States Patent and Trademark Office
P.O. Box 1450
Alexandria, VA 22313-1450
www.uspto.gov

INTEL CORPORATION
C/O INTELLEVATE, LLC
P O BOX 52050
MINNEAPOLIS, MN 55402

COPY MAILED

SEP 07 2006

OFFICE OF PETITIONS

In re Application of	:
Jayne L. Mershon et al	:
Application No. 10/668,511	: DECISION ON PETITION
Filed: September 22, 2003	: UNDER 37 CFR 1.313(c)(3)
Attorney Docket No. 42P17198	:

This is a decision on the petition, filed August 29, 2006, under 37 CFR 1.313(c)(3) to withdraw the above-identified application from issue after payment of the issue fee.

The petition is **GRANTED**.

Petitioner requests that the above-identified application be withdrawn from issue for express abandonment in favor of a continuing application stated to have been previously filed.

The petition complies with the requirements of 37 CFR 1.313(c)(3). Accordingly, the application is hereby withdrawn from issue, and the abandonment is hereby recognized.

The address on the petition differs from the address of record. Accordingly, a courtesy copy of this decision is also being mailed to the address on the petition.

Telephone inquiries should be directed to the undersigned at (571) 272-3218.

Frances Hicks
Petitions Examiner
Office of Petitions

cc:

Intel Corporation
P O Box 5326
Santa Clara, CA 95056-5326

C:\Documents and Settings\FHicks\My Documents\470\Sept9\668511.wpd

UNITED STATES PATENT AND TRADEMARK OFFICE

UNITED STATES DEPARTMENT OF COMMERCE
United States Patent and Trademark Office
Address: COMMISSIONER FOR PATENTS
P.O. Box 1450
Alexandria, Virginia 22313-1450
www.uspto.gov

WORKMAN NYDEGGER/Varian
1000 Eagle Gate Tower
60 East South Temple
Salt Lake City, UT 84111

Mail Date: 04/20/2010

Applicant	: Don Warburton	: DECISION ON REQUEST FOR
Patent Number	: 7658987	: RECALCULATION of PATENT
Issue Date	: 02/09/2010	: TERM ADJUSTMENT IN VIEW
Appliction No	: 10/668,537	: OF WYETH
Filed	: 09/23/2003	:
		:

The Patentee's Request for Recalculation is **DISMISSED.**

This Request is deemed ineligible for consideration for one or more of the following reasons:

(A). The patent for which PTA recalculation is requested is either a design or reissue application or is a reexamination proceeding;

(B). The patent for which PTA recalculation is requested resulted from a utility or plant application filed under 35 USC 111(a) before May 29, 2000 and no CPA filed in the application on/after May 29, 2000;

(C). The patent for which PTA recalculation is requested resulted from an international application in which the international filing date was before May 29, 2000 and no CPA filed in the application on/after May 29, 2000;

(D). The patent for which PTA recalculation is requested issued on/after March 2, 2010;

(E). The Request for Recalculation was filed more than 180 days after the grant date of the patent and the request was not filed within two months of a dismissal of a request for reconsideration of the of the patent term under 37 CFR 1.705(d);

(F). The Request for Recalculation is not solely limited to USPTO pre-Wyeth interpretation of 35 U.S.C. 154(b)(2)(A);

or

(G). A civil action was filed pursuant to 35 U.S.C. 154(b)(4)(A)concerning the same patent at issue in this request.

Patentee may file a reply to this decision dismissing the Request for Recalculation. Patentee must file such reply within one month or thirty days, whichever is longer, of the mail date of the decision dismissing the Request for Recalculation. No fee is required if patentee is asserting in the reply that the dismissal for ineligibility is improper.

Patentee should use document code PET.OP if electronically filing a reply to this dismissal. If the USPTO finds that the request was improperly deemed ineligible, the USPTO will mail applicant a recalculation determination.

Patentee should be aware that in order to preserve the right to review in the United States District Court for the District of Columbia of the USPTO patent term adjustment determination, patentee must ensure that he or she also take the steps required under 35 U.S.C. 154(b)(4)(A). Nothing in the request for recalculation should be construed as providing an alternative time frame for commencing a civil action under 35 U.S.C. 154 (b)(4)(A).

Any questions concerning this decision should be directed to the Office of Patent Legal Administration at 571-272-7702.

SPE RESPONSE FOR CERTIFICATE OF CORRECTION

Paper No.: 07112006

DATE : May 31, 2006

TO SPE OF : ART UNIT 2882

SUBJECT : Request for Certificate of Correction for Appl. No.: 10/668,538 Patent No.: 7,016,460B2

Please respond to this request for a certificate of correction within 7 days.

Please review the requested changes/corrections as shown in the **COCIN** document(s) in the IFW application image. No new matter should be introduced, nor should the scope or meaning of the claims be changed.

Please complete the response (see below) and forward the completed response to scanning using document code **COCX**.

Magdalene Talley

Certificates of Correction Branch

703-308-9390 ext. 116

Thank You For Your Assistance

The request for issuing the above-identified correction(s) is hereby:

Note your decision on the appropriate box.

- ☐ **Approved** — **All** changes apply.
- ☒ **Approved in Part** — Specify below which changes **do not** apply.
- ☐ **Denied** — State the reasons for denial below.

Comments: The change requested for column 7, line 11, has not been entered because it is not in accordance with the Examiner's amendment of 10/5/05. The change should have been made to column 7, line 12, after "comprising:"

EDWARD J. GLICK SPE 2882 Art Unit

SUPERVISORY PATENT EXAMINER

UNITED STATES PATENT AND TRADEMARK OFFICE

UNITED STATES DEPARTMENT OF COMMERCE
United States Patent and Trademark Office
Address: COMMISSIONER FOR PATENTS
P.O. Box 1450
Alexandria, Virginia 22313-1450
www.uspto.gov

IBM CORPORATION, T.J. WATSON RESEARCH CENTER
P.O. BOX 218
YORKTOWN HEIGHTS, NY 10598

Mail Date: 04/20/2010

Applicant	: Yuan-Chi Chang	: DECISION ON REQUEST FOR
Patent Number	: 7587394	: RECALCULATION of PATENT
Issue Date	: 09/08/2009	: TERM ADJUSTMENT IN VIEW
Appliction No	: 10/668,549	: OF WYETH AND NOTICE OF INTENT TO
Filed	: 09/23/2003	: ISSUE CERTIFICATE OF CORRECTION
		:

The Request for Recalculation is **GRANTED** to the extent indicated.

The patent term adjustment has been determined to be **493** days. The USPTO will *sua sponte* issue a certificate of correction reflecting the amount of PTA days determined by the recalculation.

Prior to the issuance of the certificate of correction, the USPTO will afford patentee an opportunity to be heard and request reconsideration. Accordingly, patentee has **one month or thirty (30) days**, whichever is longer, to file a request for reconsideration of this patent term adjustment calculation. See 35 U.S.C. 154(b)(3)(B)(ii) and 37 CFR 1.322(a)(4). No extensions of time will be granted under 37 CFR 1.136.

Patentee should use document code PET.OP if electronically filing a request for reconsideration of this patent term adjustment calculation. The patentee must also include the information required by 37 CFR 1.705(b)(2) and the fee required by 37 CFR 1.18(e). If patentee does not file a timely request for reconsideration of this patent term adjustment calculation including the information required by 37 CFR 1.705(b)(2) and the fee required by 37 CFR 1.18(e), the USPTO will issue a certificate of correction reflecting the PTA determination noted above.

Patentee should be aware that in order to preserve the right to review in the United States District Court for the District of Columbia of the USPTO patent term adjustment determination, patentee must ensure that he or she also take the steps required under 35 U.S.C. 154(b)(4)(A) in a timely manner. Nothing in the request for recalculation should be construed as providing an alternative time frame for commencing a civil action under 35 U.S.C. 154(b)(4)(A).

Any questions concerning this decision should be directed to the Office of Patent Legal Administration at 571-272-7702.

Enter Amendments
/P. A. D'Agostino/
Sept 30, 2009

AC032
PATENT

IN THE UNITED STATES PATENT AND TRADEMARK OFFICE

Applicant: Robert P. Bartholomew, et al.	:	
	:	Art Unit: 3714
Serial No.: 10/668,560	:	
	:	Examiner: Nguyen, Dat
Filed: September 22, 2003	:	
	:	
For: RANDOM BONUS PRIZE SHOWN ON THE SYSTEM DISPLAY	:	

AMENDMENT

Mail Stop: Amendment
Commissioner for Patents
P.O. Box 1450
Alexandria, VA 22313-1450

In response to the Office Action dated July 17, 2009, and made Final, Applicants respectfully request consideration and entry of the following amendment.

UNITED STATES PATENT AND TRADEMARK OFFICE

COMMISSIONER FOR PATENTS
UNITED STATES PATENT AND TRADEMARK OFFICE
P.O. BOX 1450
ALEXANDRIA, VA 22313-1450
WWW.USPTO.GOV

Paper No. None

FROMMER LAWRENCE & HAUG
745 FIFTH AVENUE- 10TH FL.
NEW YORK NY 10151

COPY MAILED

OCT 06 2004

OFFICE OF PETITIONS

In re Application of
Michael Nicholas Morton
Application No. 10/668,564
Filed: September 23, 2003
Attorney Docket No. 674543-2004
Title: LIPID PROFILE MODULATION

DECISION ON PETITION

This is a decision on the petition filed August 16, 2004, requesting that the above-identified application be accorded a filing date of September 23, 2003, with page 53 of the specification as a part of the original disclosure of the application.

The application was filed on September 23, 2003. However, on August 9, 2004, the Office of Initial Patent Examination (OIPE) mailed a "Notice of Omitted Item(s) in a Nonprovisional Application " (notice) stating that the application had been accorded a filing date of September 23, 2003, and advising applicants that the application appeared to have been deposited without page 53 of the specification.

Petitioners allege that page 53 of the specification was filed on September 23, 2003. In support, Petitioner has included a copy of his stamped postcard receipt acknowledging receipt of "Application for patent, including 70 pages specification 51 claims 1 page abstract" in the United States Patent and Trademark Office (Office) on September 23, 2003. Applicants request that page 53 of the specification be accorded a filing date of September 23, 2003.

The argument and evidence presented are not persuasive. The PTO file is the official record of the papers originally filed in this application. A review of the official electronic file reveals 70 pages of specification (pages i, 1-52, and 54-70), as well as two sets of claims. Claims 1-48 appear on pages 71-74, and claims 1-51 appear on pages 75-78. It is noted that the two sets of claims do not appear to be duplicates. Page 53 does not appear in the electronic file.

Petitioner has included a postcard receipt in which he indicated that 70 pages of specification were being submitted to the Office, and the Office confirmed that 70 pages of specification were received. These 70 pages have been located, and it appears that Petitioner did indeed submit 70 pages to the Office. Page 53 was not among these papers. If the undersigned were to add

page 53 to the official file, the specification would constitute 71 pages. As such, it is clear that page 53 was not submitted on filing.

For this reason, the petition under 37 CFR 1.53(b) is dismissed.

Page 53 of the specification, submitted with the instant petition, will not be entered. If petitioner desires for the examiner to consider this page which was not submitted as part of the original disclosure, then he may submit this page as an amendment. Any such amendment will, of course, be reviewed by the examiner for new matter[1]. The amendment is not new matter if the substance was a part of the disclosure of the prior application

The petition fee of $130.00 will not be refunded, as this petition was not necessitated by any error on the part of the Office.

The application is being returned to OIPE for further processing with a filing date of September 23, 2003, using only the pages filed on that date. Page 53 of the specification will not be entered.

OIPE will also charge Applicant's Deposit Account, since 99 claims were submitted but the check which Applicant submitted only covered 51 claims.

The general phone number for the Office of Petitions which should be used for status requests is (571) 272-3282. Telephone inquiries *regarding this decision* should be directed to the undersigned at 571-272-3225.

Paul Shanoski
Senior Attorney
Office of Petitions
United States Patent and Trademark Office

1 See MPEP 608.02(a).

UNITED STATES PATENT AND TRADEMARK OFFICE

Commissioner for Patents
United States Patent and Trademark Office
P.O. Box 1450
Alexandria, VA 22313-1450
www.uspto.gov

McGINN & GIBB PLLC
8321 OLD COURTHOUSE ROAD, SUITE 200
VIENNA, VA 22182-3817

COPY MAILED

MAR 17 2005

OFFICE OF PETITIONS

In re Application of	:
Mahito Shiba et al	:
Application No. 10/668,602	: DECISION GRANTING PETITION
Filed: September 24, 2003	: UNDER 37 CFR 1.313(c)(2)
Attorney Docket No. K06-162601M/TBS	:

This is a decision on the petition, filed March 11, 2005, under 37 CFR 1.313(c)(2) to withdraw the above-identified application from issue after payment of the issue fee.

The petition is **GRANTED**.

The above-identified application is withdrawn from issue for consideration of a submission under 37 CFR 1.114 (request for continued examination). See 37 CFR 1.313(c)(2).

Petitioner is advised that the issue fee paid on February 17, 2005 in the above-identified application cannot be refunded. If, however, the above-identified application is again allowed, petitioner may request that it be applied towards the issue fee required by the new Notice of Allowance.[1]

Telephone inquiries should be directed to the undersigned at (571) 272-3218.

This matter is being referred to Technology Center AU 2855 for processing of the request for continued examination under 37 CFR 1.114 and for consideration of the concurrently filed Information Disclosure Statement.

Frances Hicks
Frances Hicks
Petitions Examiner
Office of Petitions
Office of the Deputy Commissioner
for Patent Examination Policy

---

[1] *The request to apply the issue fee to the new Notice may be satisfied by completing and returning the new Issue Fee Transmittal Form PTOL-85(b), which includes the following language thereon: "Commissioner for Patents is requested to apply the Issue Fee and Publication Fee (if any) or re-apply any previously paid issue fee to the application identified above." Petitioner is advised that, whether a fee is indicated as being due or not, the Issue Fee Transmittal Form* **must** *be completed and timely submitted to avoid abandonment. Note the language in bold text on the first page of the Notice of Allowance and Fee(s) Due (PTOL-85).*

UNITED STATES PATENT AND TRADEMARK OFFICE

Commissioner for Patents
United States Patent and Trademark Office
P.O. Box 1450
Alexandria, VA 22313-1450
www.uspto.gov

JJGJR.: 07-07

Paper No: __

MCKENNA LONG & ALDRIDGE LLP
1900 K STREET, NW
WASHINGTON DC 20006

COPY MAILED

JUL 2 4 2007

OFFICE OF PETITIONS

In re Application of	:	
Park, et al.	:	
Application No. 10/668,606	:	DECISION
Filing Date: 24 September. 2003	:	
Attorney Docket No.: 8734.233.00US	:	

This is a decision on the petition filed on 7 June, 2007, alleging unintentional delay under 37 C.F.R. §1.137(b).

For the reasons set forth below, the petition under 37 C.F.R.§1.137(b) is **GRANTED**.

BACKGROUND

The record reflects that:

- Petitioner failed to reply timely and properly to the final Office action mailed on18 October, 2006, with reply due under a non-extendable deadline on or before 18 January, 2007;

- on 16 January, Petitioner filed *inter alia*, an after-final amendment, which Petitioner as one registered to practice before the Office is aware is not of right and was not a proper reply,[1] and the Examiner mailed an Advisory Action on 8 May, 2007;

[1] A proper reply is a an amendment *prima facie* placing the application in condition for allowance, a Notice of Appeal, or an RCE (with fee and submission). (See: MPEP §711.03(c).)

- the instant application went abandoned after midnight 18 January, 2007;
- it does not appear that the Office mailed a Notice of Abandonment before the instant petition was filed;
- on 7 June, 2007, Petitioner filed the instant petition (with fee), reply in the form of a request for continued examination (RCE) with fee and amendments as the submission under 37 C.F.R.§1.114, and Petitioner has made the statement of unintentional delay.

Out of an abundance of caution, Petitioners always are reminded that the filing of a petition under 37 C.F.R. §1.181 does not toll any periods that may be running any action by the Office and a petition seeking relief under the regulation must be filed within two (2) months of the act complained of (see: 37 C.F.R. §1.181(f)), and those registered to practice *and* all others who make representations before the Office are reminded to inquire into the underlying facts of representations made to the Office and support averments with the appropriate documentation–since all owe to the Office the continuing duty to disclose.[2]

---

[2] See supplement of 17 June, 1999. The Patent and Trademark Office is relying on petitioner's duty of candor and good faith and accepting a statement made by Petitioner. See Changes to Patent Practice and Procedure, 62 Fed. Reg. at 53160 and 53178, 1203 Off. Gaz. Pat. Office at 88 and 103 (responses to comments 64 and 109)(applicant obligated under 37 C.F.R. §10.18 to inquire into the underlying facts and circumstances when providing statements to the Patent and Trademark Office).

Specifically, the regulations at 37 C.F.R. §10.18 provide:

§ 10.18 Signature and certificate for correspondence filed in the Patent and Trademark Office.
(a) For all documents filed in the Office in patent, trademark, and other non-patent matters, except for correspondence that is required to be signed by the applicant or party, each piece of correspondence filed by a practitioner in the Patent and Trademark Office must bear a signature by such practitioner complying with the provisions of §1.4(d), §1.4(e), or § 2.193(c)(1) of this chapter.
(b) By presenting to the Office (whether by signing, filing, submitting, or later advocating) any paper, the party presenting such paper, whether a practitioner or non-practitioner, is certifying that—

(1) All statements made therein of the party's own knowledge are true, all statements made therein on information and belief are believed to be true, and all statements made therein are made with the knowledge that whoever, in any matter within the jurisdiction of the Patent and Trademark Office, knowingly and willfully falsifies, conceals, or covers up by any trick, scheme, or device a material fact, or makes any false, fictitious or fraudulent statements or representations, or makes or uses any false writing or document knowing the same to contain any false, fictitious or fraudulent statement or entry, shall be subject to the penalties set forth under 18 U.S.C. 1001, and that violations of this paragraph may jeopardize the validity of the application or document, or the validity or enforceability of any patent, trademark registration, or certificate resulting therefrom; and

(2) To the best of the party's knowledge, information and belief, formed after an inquiry reasonable under the circumstances, that —

(i) The paper is not being presented for any improper purpose, such as to harass someone or to cause unnecessary delay or needless increase in the cost of prosecution before the Office;

(ii) The claims and other legal contentions therein are warranted by existing law or by a nonfrivolous argument for the extension, modification, or reversal of existing law or the establishment of new law;

(iii) The allegations and other factual contentions have evidentiary support or, if specifically so identified, are likely to have evidentiary support after a reasonable opportunity for further investigation or discovery; and

(iv) The denials of factual contentions are warranted on the evidence, or if specifically so identified, are reasonably based on a lack of information or belief.

(c) Violations of paragraph (b)(1) of this section by a practitioner or non-practitioner may jeopardize the validity of the application or document, or the validity or enforceability of any patent, trademark registration, or certificate resulting therefrom. Violations of any of paragraphs (b)(2)(i) through (iv) of this section are, after notice and reasonable opportunity to respond, subject to such sanctions as deemed appropriate by the Commissioner, or the Commissioner's designee, which may include, but are not limited to, any combination of —

(1) Holding certain facts to have been established;

(2) Returning papers;

(3) Precluding a party from filing a paper, or presenting or contesting an issue;

STATUTES, REGULATIONS AND ANALYSIS

Congress has authorized the Commissioner to "revive an application if the delay is shown to the satisfaction of the Commissioner to have been "unavoidable." 35 U.S.C. §133 (1994).[3]

The regulations at 37 C.F.R. §1.137(a) and (b) set forth the requirements for a petitioner to revive a previously unavoidably or unintentionally, respectively, abandoned application under this congressional grant of authority. The language of 35 U.S.C. §133 and 37 C.F.R. §1.137(a) is clear, unambiguous, and without qualification: the delay in tendering the reply to the outstanding Office action, as well as filing the first petition seeking revival, must have been unavoidable for the reply now to be accepted on petition.[4]

Delays in responding properly raise the question whether delays are unavoidable.[5] Where there is a question whether the delay was unavoidable, Petitioners must meet the burden of establishing that the delay was unavoidable within the meaning of 35 U.S.C. §133 and 37 C.F.R. §1.137(a).[6] And the Petitioner must be diligent in attending to the matter.[7] Failure to do so does not constitute the care required under Pratt, and so cannot satisfy the test for diligence and due care.

(By contrast, unintentional delays are those that do not satisfy the very strict statutory and regulatory requirements of unavoidable delay, and also, by definition, are not intentional.[8]))

---

(4) Imposing a monetary sanction;
(5) Requiring a terminal disclaimer for the period of the delay; or
(6) Terminating the proceedings in the Patent and Trademark Office.
(d) Any practitioner violating the provisions of this section may also be subject to disciplinary action. See § 10.23(c)(15).
[Added 50 FR 5175, Feb. 6, 1985, effective Mar. 8, 1985; para. (a) revised, 58 FR 54494, Oct. 22, 1993, effective Nov. 22, 1993; paras. (a) & (b) revised, paras. (c) & (d) added, 62 FR 53131, Oct. 10, 1997, effective Dec. 1, 1997; para. (a) revised, 69 FR 56481, Sept. 21, 2004, effective Oct. 21, 2004]

[3] 35 U.S.C. §133 provides:
35 U.S.C. §133 Time for prosecuting application.
Upon failure of the applicant to prosecute the application within six months after any action therein, of which notice has been given or mailed to the applicant, or within such shorter time, not less than thirty days, as fixed by the Commissioner in such action, the application shall be regarded as abandoned by the parties thereto, unless it be shown to the satisfaction of the Commissioner that such delay was unavoidable.

[4] Therefore, by example, an unavoidable delay in the payment of the Filing Fee might occur if a reply is shipped by the US Postal Service, but due to catastrophic accident, the delivery is not made.

[5] See: *Changes to Patent Practice and Procedure*; *Final Rule Notice*, 62 *Fed. Reg.* at 53158-59 (October 10, 1997), 1203 *Off. Gaz. Pat. Office* at 86-87 (October 21, 1997).

[6] See: In re Application of G, 11 USPQ2d 1378, 1380 (Comm'r Pats. 1989).

[7] See: Diligence in Filing Petitions to Revive and Petitions to Withdraw the Holding of Abandonment, 1124 Off. Gaz. Pat. Office 33 (March 19, 1991). It was and is Petitioner's burden to exercise diligence in seeking either to have the holding of abandonment withdrawn or the application revived. See 1124 Off. Gaz. Pat. Office supra.

[8] Therefore, by example, an unintentional delay in the reply might occur if the reply and transmittal form are to be prepared for shipment by the US Postal Service, but other pressing matters distract one's attention and the mail is not timely deposited for shipment.

As to the Allegations
of Unintentional Delay

The requirements for a grantable petition under 37 C.F.R. §1.137(b) are the petition and fee, a statement/showing of unintentional delay, a proper reply, and–where appropriate--a terminal disclaimer and fee.

It appears that Petitioner has satisfied the requirements under the regulation.

CONCLUSION

The petition under 37 C.F.R. §1.137(b) hereby is **granted**.

The instant application is released to Technology Center 2600 for further processing in due course.

While telephone inquiries regarding this decision may be directed to the undersigned at (571) 272-3214, it is noted that all practice before the Office is in writing (see: 37 C.F.R. §1.2[9]) and the proper authority for action on any matter in this regard are the statutes (35 U.S.C.), regulations (37 C.F.R.) and the commentary on policy (MPEP). Therefore, no telephone discussion may be controlling or considered authority for Petitioner's action(s).

John J. Gillon, Jr.
Senior Attorney
Office of Petitions

---

[9] The regulations at 37 C.F.R. §1.2 provide:
§1.2 Business to be transacted in writing.
All business with the Patent and Trademark Office should be transacted in writing.The personal attendance of applicants or their attorneys or agents at the Patent and Trademark Office is unnecessary. The action of the Patent and Trademark Office will be based exclusively on the written record in the Office. No attention will be paid to any alleged oral promise, stipulation,or understanding in relation to which there is disagreement or doubt.

UNITED STATES PATENT AND TRADEMARK OFFICE

Commissioner for Patents
United States Patent and Trademark Office
P.O. Box 1450
Alexandria, VA 22313-1450
www.uspto.gov

TOLER SCHAFFER, LLP
5000 PLAZA ON THE LAKES
SUITE 265
AUSTIN TX 78746

COPY MAILED
DEC 1 8 2006
OFFICE OF PETITIONS

In re Application of :
Lowmaster :
Application No. 10/668,616 : ON PETITION
Filed: September 23, 2003 :
Attorney Docket No. 1033-SS00412 :
For: SYSTEM AND METHOD FOR FACILITATING PACKETIZED CALLS BETWEEN MANAGED NETWORKS

This is a decision on the petition under 37 CFR 1.181, filed September 20, 2006, to withdraw the holding of abandonment.

The petition under 37 CFR 1.181 is **GRANTED**.

The Office contended that the above-identified application became abandoned for failure to submit a reply to the March 9, 2006 non-final Office action, which set a three month extendable period for reply. No extensions of time or reply being received, the Office contended that this application became abandoned on June 10, 2006. The filing of the present petition precedes the mailing of A Notice of Abandonment.

Petitioner alleges that the March 9, 2006 non-final Office action was not received.

The showing required to establish non-receipt of an Office communication must include:

1. A statement from the practitioner stating that the Office communication was not received by the practitioner and attesting to the fact that a search of the file jacket and docket records indicates that the Office communication was not received.
2. A copy of the docket record where the non-received Office communication would have been entered had it been received and docketed must be attached to and referenced in practitioner's statement.[1]

[1] See notice entitled "Withdrawing the Holding of Abandonment When Office Actions Are Not Received," 1156 O.G. 53 (November 16, 1993).

Petitioner has submitted a copy of the docket record where the requirement would have been entered had the March 9, 2006 non-final Office action been received. In addition, practitioner referenced the docket record in the petition and stated that a review of the application's file jacket and docket record for the March 9, 2006 non-final Office action was fruitless.

Petitioner has established non-receipt. The petition is **granted** and the holding of abandonment is withdrawn.

Petitioner has filed a response to the March 9, 2006 non-final Office action with the present petition. As such, there is no need to re-mail the March 9, 2006 non-final Office action with a new period set for reply.

After the mailing of this decision, the application will be returned to Technology Center A.U. 2662 for consideration of the amendment filed on September 20, 2006.

Telephone inquiries may be directed to the undersigned at (571) 272-3230.

Shirene Willis Brantley

Shirene Willis Brantley
Senior Petitions Attorney
Office of Petitions

UNITED STATES PATENT AND TRADEMARK OFFICE

COMMISSIONER FOR PATENTS
UNITED STATES PATENT AND TRADEMARK OFFICE
P.O. BOX 1450
ALEXANDRIA, VA 22313-1450
WWW.USPTO.GOV

Paper No. None

MINTZ, LEVIN, COHN, FERRIS, GLOVSKY
AND POPEO, P.C.
ONE FINANCIAL CENTER
BOSTON MA 02111

COPY MAILED
MAR 30 2006
OFFICE OF PETITIONS

In re Application of	:	
David J. Smith et al.	:	
Application No. 10/668,620	:	DECISION ON PETITION
Filed: September 23, 2003	:	UNDER 37 C.F.R. §1.137(f)
Attorney Docket No. 18133-158	:	
Title: USER INTERFACE	:	
PROVISIONING	:	

This is a decision on the petition filed on January 4, 2006, pursuant to 37 C.F.R. §1.137(f), to revive the above-identified application.

A grantable petition pursuant to 37 CFR 1.137(f) must be accompanied by:

(1) Notification of the filing of an application in a foreign country or under a multinational treaty that requires 18 month publication[1];
(2) The petition fee as set forth in 37 C.F.R. § 1.17(m), and;
(3) A statement that the entire delay in filing the notice from the date that the notice was due under 35 U.S.C. §122(b)(2)(B)(iii) until the date the notice was filed was unintentional. The Commissioner may require

1 See PTO/SB/36 and paragraph on PTO/SB/64a for further information. Both may be downloaded at http://www.uspto.gov/web/forms/index.html.

additional information where there is a question whether the delay was unintentional.

Petitioner states that the present nonprovisional application is the subject of an application filed in either a foreign or an international application on September 23, 2004. However, the United States Patent and Trademark Office was unintentionally not notified of this filing within 45 days subsequent to the filing of the subject application in either an international application or a foreign country.

On January 4, 2006, a Notice of Rescission of Nonpublication Request was filed with the present petition.

In view of the above, this application became abandoned pursuant to 35 U.S.C. §1.22(b)(2)(B)(iii) and 37 C.F.R. §1.213(c) for failure to timely notify the Office of the filing of either a foreign application or an application under a multilateral international agreement that requires publication of applications 18 months after filing.

The petition under 37 C.F.R. §1.137(f) is **GRANTED**.

Petitioner has submitted the notification of either a foreign or an international filing, paid the petition fee, and has made the proper statement of unintentional delay.

The present petition has been found to be in compliance with 37 C.F.R. §1.137(f). Accordingly, the failure to timely notify the Office of a foreign or international filing within 45 days after the date of filing of such foreign or international application as provided by 35 U.S.C. §122(b)(2)(B)(iii) and 37 C.F.R. §1.213(c) is accepted as having been unintentionally delayed.

The previous Request and Certification under 35 U.S.C. §122(b)(2)(B)(i), filed with the original application papers, has been rescinded. Unfortunately, due to a software problem the Office is currently experiencing, the Office cannot determine the projected publication date at this time.

Technology Center 2100 will be notified of this decision.

The general phone number for the Office of Petitions which should be used for status requests is (571) 272-3282. Telephone

inquiries regarding *this decision* should be directed to the undersigned at (571) 272-3225.

Paul Shanoski
Senior Attorney
Office of Petitions
United States Patent and Trademark Office

UNITED STATES PATENT AND TRADEMARK OFFICE

COMMISSIONER FOR PATENTS
UNITED STATES PATENT AND TRADEMARK OFFICE
P.O. BOX 1450
ALEXANDRIA, VA 22313-1450
WWW.USPTO.GOV

Paper No. None

COPY MAILED
MAR 30 2006
OFFICE OF PETITIONS

MINTZ, LEVIN, COHN, FERRIS, GLOVSKY
AND POPEO, P.C.
ONE FINANCIAL CENTER
BOSTON MA 02111

In re Application of	:	
Edward M. Ives	:	
Application No. 10/668,621	:	DECISION ON PETITION
Filed: September 23, 2003	:	UNDER 37 C.F.R. §1.137(f)
Attorney Docket No. 18133-122	:	
Title: POWER STATUS	:	
NOTIFICATION	:	

This is a decision on the petition filed on January 4, 2006, pursuant to 37 C.F.R. §1.137(f), to revive the above-identified application.

A grantable petition pursuant to 37 CFR 1.137(f) must be accompanied by:

(1) Notification of the filing of an application in a foreign country or under a multinational treaty that requires 18 month publication[1];
(2) The petition fee as set forth in 37 C.F.R. § 1.17(m), and;
(3) A statement that the entire delay in filing the notice from the date that the notice was due under 35 U.S.C. §122(b)(2)(B)(iii) until the date the notice was filed was unintentional. The Commissioner may require

1 See PTO/SB/36 and paragraph on PTO/SB/64a for further information. Both may be downloaded at http://www.uspto.gov/web/forms/index.html.

additional information where there is a question whether the delay was unintentional.

Petitioner states that the present nonprovisional application is the subject of an application filed in either a foreign or an international application on September 23, 2004. However, the United States Patent and Trademark Office was unintentionally not notified of this filing within 45 days subsequent to the filing of the subject application in either an international application or a foreign country.

On January 4, 2006, a Notice of Rescission of Nonpublication Request was filed with the present petition.

In view of the above, this application became abandoned pursuant to 35 U.S.C. §1.22(b)(2)(B)(iii) and 37 C.F.R. §1.213(c) for failure to timely notify the Office of the filing of either a foreign application or an application under a multilateral international agreement that requires publication of applications 18 months after filing.

The petition under 37 C.F.R. §1.137(f) is **GRANTED**.

Petitioner has submitted the notification of either a foreign or an international filing, paid the petition fee, and has made the proper statement of unintentional delay.

The present petition has been found to be in compliance with 37 C.F.R. §1.137(f). Accordingly, the failure to timely notify the Office of a foreign or international filing within 45 days after the date of filing of such foreign or international application as provided by 35 U.S.C. §122(b)(2)(B)(iii) and 37 C.F.R. §1.213(c) is accepted as having been unintentionally delayed.

The previous Request and Certification under 35 U.S.C. §122(b)(2)(B)(i), filed with the original application papers, has been rescinded. A Notice Regarding Rescission of Nonpublication Request which sets forth the projected publication date of June 29, 2006 accompanies this decision on petition.

Technology Center 2100 will be notified of this decision.

The general phone number for the Office of Petitions which should be used for status requests is (571) 272-3282. Telephone

inquiries regarding *this decision* should be directed to the undersigned at (571) 272-3225.

Paul Shanoski
Senior Attorney
Office of Petitions
United States Patent and Trademark Office

Encl. Communication Regarding Rescission of Nonpublication Request and/or Notice of Foreign Filing

UNITED STATES PATENT AND TRADEMARK OFFICE

Commissioner for Patents
United States Patent and Trademark Office
P.O. Box 1450
Alexandria, VA 22313-1450
www.uspto.gov

FRANK CHAU, ESQ.
F. CHAU & ASSOCIATES, LLP
1900 HEMPSTEAD TURNPIKE
SUITE 501
EAST MEADOW, NY 11554

COPY MAILED

FEB 05 2007

OFFICE OF PETITIONS

In re Application of	:
Raghunath, et al.	:
Application No. 10/668,626	: DECISION ON PETITION
Filed: September 23, 2003	:
Docket No.: YOR920030220US1	:
(8728-629	:

This is a decision on the petition under 37 CFR 1.181, filed January 22, 2007, to withdraw the holding of abandonment.

The petition under 37 CFR 1.181 to withdraw the holding of abandonment is hereby **DISMISSED**.

Any request for reconsideration of this decision must be submitted within **TWO (2) MONTHS** from mail date of this decision. Extensions of time under 37 CFR 1.136(a) are permitted. The reconsideration request should include a cover letter entitled "Renewed Petition under 37 CFR 1.181." This is not a final agency decision.

The application became abandoned June 7, 2006 for failure to timely submit a properly reply to the final Office action mailed March 6, 2006. The final Office action set a three month shortened statutory period of time for reply. Notice of Abandonment was mailed November 21, 2006.

Petitioners attribute the holding of abandonment to the Office's failure to mail the Office action to the correct correspondence address.

Petitioners' arguments have been carefully considered and found convincing.

A change of correspondence address was submitted September 29, 2005, prior to the mailing of final rejection. However, the change of correspondence address was not entered into the record because the request to change the correspondence address was not submitted by one empowered by applicants to prosecute the application.

A review of the declaration submitted with the application on filing reveals that correspondence address was designated to Frank

Chau at the address indicated above. However, Frank Chau is not amongst the attorneys appointed by applicants to prosecute the application.

Therefore, the Office was not able to institute the requested change of correspondence address because it was not properly submitted by the attorney of record and, thus, failed to comply with 37 CFR 1.33(b).

Petitioners are advised that all future correspondence concerning this application will be mailed to the correspondence address of record until proper request accompanied by the required documentation is submitted.

ALTERNATE VENUE

Petitioners may wish to consider filing a petition stating that the delay was unintentional. Petitioners' attention is directed to 37 CFR 1.137(b) which provides for the revival of an "unintentionally" abandoned application without a showing that the delay in prosecution or in late payment of an issue fee was "unavoidable." An "unintentional" petition under 37 CFR 1.137(b) must be accompanied by the required petition fee and reply.

The filing of a petition under 37 CFR 1.137(b) cannot be intentionally delayed and therefore must be filed promptly. A person seeking revival due to unintentional delay cannot make a statement that the delay was unintentional unless the entire delay, including the delay from the date it was discovered that the application was abandoned until the filing of the petition to revive under 37 CFR 1.137(b), was unintentional. A statement that the delay was unintentional is not appropriate if petitioner intentionally delayed the filing of a petition for revival under 37 CFR 1.137(b).

Further correspondence with respect to this matter should be addressed as follows:

By mail:	**Mail Stop Petition** Commissioner for Patents P.O. Box 1450 Alexandria, VA 22313-1450
By facsimile:	(571) 273-8300
By hand delivery:	U.S. Patent and Trademark Office Customer Window, **Mail Stop Petition** Randolph Building 401 Dulany Street

Alexandria, VA 22314

Telephone inquiries concerning this matter may be directed to the undersigned at 571-272-3205.

Alesia M. Brown
Petitions Attorney
Office of Petitions

CC: F. CHAU & ASSOCIATES, LLC
130 WOODBURY ROAD
WOODBURY NY 11797

UNITED STATES PATENT AND TRADEMARK OFFICE

COMMISSIONER FOR PATENTS
UNITED STATES PATENT AND TRADEMARK OFFICE
P.O. BOX 1450
ALEXANDRIA, VA 22313-1450
www.uspto.gov

FRANK CHAU, ESQ.
F. CHAU & ASSOCIATES, LLP
1900 HEMPSTEAD TURNPIKE
SUITE 501
EAST MEADOW, NY 11554

COPY MAILED

JUN 21 2007

OFFICE OF PETITIONS

In re Application of	:
Raghunath, et al.	:
Application No. 10/668,626	: DECISION ON PETITION
Filed: September 23, 2003	:
Docket No.: YOR920030220US1	:
(8728-629	:

This is a decision on the renewed petition under 37 CFR 1.181, filed April 5, 2007, to withdraw the holding of abandonment.

The petition under 37 CFR 1.181 to withdraw the holding of abandonment is hereby **DISMISSED**.

Any request for reconsideration of this decision must be submitted within **TWO (2) MONTHS** from mail date of this decision. Extensions of time under 37 CFR 1.136(a) are permitted. The reconsideration request should include a cover letter entitled "Renewed Petition under 37 CFR 1.181." This is not a final agency decision.

The application became abandoned June 7, 2006 for failure to timely submit a properly reply to the final Office action mailed March 6, 2006. The final Office action set a three month shortened statutory period of time for reply. Notice of Abandonment was mailed November 21, 2006.

Petitioners continue to attribute the holding of abandonment to the Office's failure to mail the Office action to the correct correspondence address.

Petitioners' arguments have been carefully considered and found unconvincing.

A review of the record reveals that, as indicated by petitioners, a change of correspondence address was submitted April 11, 2005, August 1, 2005, and September 29, 2005, prior to the mailing of final rejection on March 6, 2006.

The change of correspondence address submitted April 11, 2005 was executed by Frank Chau. The change of correspondence address submitted August 1, 2005 bore the name of Frank Chau, but was not

executed. The change of correspondence submitted September 29, 2005 was executed by Frank Chau.

As previously indicated, the record is devoid of a power of attorney to Mr. Chau. Therefore, a request to change correspondence address submitted by one not empowered before the Office to act on behalf of applicants could not be entered. *See*, 37 CFR 1.33. A review of the declaration submitted with the application on filing reveals that correspondence address was designated to Frank Chau at the address indicated above. However, Frank Chau is not amongst the attorneys appointed by applicants to prosecute the application.

Petitioners argue that "no indication as to why the Change of Correspondence Address documents were not being entered was given."

Petitioners are advised that papers submitted that are not properly signed by a person having authority to prosecute the application before the Office are not entered. The request to change correspondence address could not be acted upon simply because Mr. Chau has never been empowered to act on behalf of applicants. The Office would not direct correspondence to this effect to Mr. Chau as the Office was without authority to communicate with an individual not authorized to act on behalf of applicants.

Moreover, despite the undersigned having previously advised petitioners to properly submit both a proper change of correspondence address and power of attorney, to date, no such submission has been received. Petitioners are advised that no further dual correspondence will be forthcoming because, as petitioners are aware, dual correspondence is simply not permitted before the agency. All future correspondence will be mailed to the correspondence address currently of record until such time as applicants elect to comply with the rules and regulations regarding change of correspondence address and power of attorney.

Moreover, be advised that practitioner herein, Nathanial T. Wallace, also lacks the requisite authority to act in this case before the Office as no power of attorney to said practitioner can be found in the record. This defect can readily be cured by prompt submission of a power of attorney/change of correspondence address properly executed by applicants upon renewed petition.

As to petitioners argument that holding of abandonment should be withdrawn "in the interest of fairness," petitioners arguments

have been considered but are not found convincing. The Notice of Abandonment was properly mailed, no response to the outstanding final Office action having been timely received. While petitioners contend non-receipt of the Office communication, compliance with the rules concerning power of attorney and change of correspondence address would have prevented the error now complained of.

ALTERNATE VENUE

Petitioners are strongly advised to consider filing a petition stating that the delay was unintentional. Petitioners' attention is directed to 37 CFR 1.137(b) which provides for the revival of an "unintentionally" abandoned application without a showing that the delay in prosecution or in late payment of an issue fee was "unavoidable." An "unintentional" petition under 37 CFR 1.137(b) must be accompanied by the required petition fee and reply.

The filing of a petition under 37 CFR 1.137(b) cannot be intentionally delayed and therefore must be filed promptly. A person seeking revival due to unintentional delay cannot make a statement that the delay was unintentional unless the entire delay, including the delay from the date it was discovered that the application was abandoned until the filing of the petition to revive under 37 CFR 1.137(b), was unintentional. A statement that the delay was unintentional is not appropriate if petitioner intentionally delayed the filing of a petition for revival under 37 CFR 1.137(b).

Further correspondence with respect to this matter should be addressed as follows:

By mail:	**Mail Stop Petition** Commissioner for Patents P.O. Box 1450 Alexandria, VA 22313-1450
By facsimile:	(571) 273-8300
By hand delivery:	U.S. Patent and Trademark Office Customer Window, **Mail Stop Petition** Randolph Building 401 Dulany Street Alexandria, VA 22314

Telephone inquiries concerning this matter may be directed to the undersigned at 571-272-3205.

Alesia M. Brown
Petitions Attorney
Office of Petitions

CC: F. CHAU & ASSOCIATES, LLC
130 WOODBURY ROAD
WOODBURY NY 11797

UNITED STATES PATENT AND TRADEMARK OFFICE

COMMISSIONER FOR PATENTS
UNITED STATES PATENT AND TRADEMARK OFFICE
P.O. BOX 1450
ALEXANDRIA, VA 22313-1450
www.uspto.gov

COPY MAILED

SEP 17 2007

OFFICE OF PETITIONS

F. CHAU & ASSOCIATES, LLC
130 WOODBURY ROAD
WOODBURY NY 11797

In re Application of	:
Raghunath, et al.	:
Application No. 10/668,626	: DECISION ON PETITION
Filed: September 23, 2003	:
Docket No.:	:
YOR920030220US1 (8728-629	:

This is a decision on the petition renewed under 37 CFR 1.137(b), filed July 26, 2007, to withdraw the holding of abandonment.

The petition under 37 CFR 1.137(b) is hereby **GRANTED**.

The application became abandoned June 7, 2006 for failure to timely submit a properly reply to the final Office action mailed March 6, 2006. The final Office action set a three month shortened statutory period of time for reply. Notice of Abandonment was mailed November 21, 2006.

The instant petition has been reviewed and found in compliance with the provisions of 37 C.F.R. § 1.137(b). Accordingly, the failure to timely submit a proper reply to the non-final Office action is accepted as having been unintentionally delayed.

This application is being forwarded to Technology Center 2800 for further processing.

Telephone inquiries concerning this matter may be directed to the undersigned at 571-272-3205.

Alesia M. Brown
Petitions Attorney
Office of Petitions

UNITED STATES PATENT AND TRADEMARK OFFICE

Commissioner for Patents
United States Patent and Trademark Office
P.O. Box 1450
Alexandria, VA 22313-1450
www.uspto.gov

PATRICK J. FAY, ESQ.
FAY KAPLUN & MARCIN, LLP
SUITE 702
150 BROADWAY
NEW YORK NY 10038

MAILED

MAR 23 2010

OFFICE OF PETITIONS

In re Application of	:	
DELANEY, James P. et al.	:	
Application No. 10/668,629	:	DECISION ON PETITION
Filed: September 23, 2003	:	TO WITHDRAW
Attorney Docket No. **10123/03501**	:	FROM RECORD
	:	

This is a decision on the Request to Withdraw as attorney or agent of record under 37 C.F.R. § 1.36(b), filed March 09, 2010.

The request is **NOT APPROVED**.

A grantable request to withdraw as attorney/agent of record must be signed by every attorney/agent seeking to withdraw or contain a clear indication that one attorney is signing on behalf of another/others.

The request cannot be approved because the signature on the Request to Withdraw as attorney does not have an original signature. All correspondence filed in the Office should be an original document and must include an original signature. It appears that the top of the petition is original; however the bottom of the petition appears to have a copied signature, which is not permitted by the USPTO. Since the petition is half original and half copied it does not appear that an original could have been retained as set forth in 37 CFR 1.4 below.

§ 1.4 Nature of correspondence and signature requirements.

(d)(1)*Handwritten signature.* Each piece of correspondence, except as provided in paragraphs (d)(2), (d)(3), (e) and (f) of this section, filed in an application, patent file, or other proceeding in the Office which requires a person's signature, must:

(i)Be an original, that is, have an original handwritten signature personally signed, in permanent dark ink or its equivalent, by that person; or

(ii)Be a direct or indirect copy, such as a photocopy or facsimile transmission (§ 1.6(d)), of an original. In the event that a copy of the original is filed, the original should be retained as evidence of authenticity. If a question of authenticity arises, the Office may require submission of the original.

All future communications from the Office will continue to be directed to the above-listed address until otherwise notified by applicant.

Telephone inquiries concerning this decision should be directed to the undersigned at 571-272-4231.

Michelle R. Eason

Michelle R. Eason
Paralegal Specialist
Office of Petitions

UNITED STATES PATENT AND TRADEMARK OFFICE

Commissioner for Patents
United States Patent and Trademark Office
P.O. Box 1450
Alexandria, VA 22313-1450
www.uspto.gov

PFIZER INC.
PATENT DEPARTMENT, MS8260-1611
EASTERN POINT ROAD
GROTON CT 06340

COPY MAILED

FEB 16 2007

OFFICE OF PETITIONS

In re Application of	:	
Cameron et al.	:	
Application No. 10/668,633	:	ON PETITION
Filed: September 23, 2003	:	
Attorney Docket No. PC11089C	:	

This is a decision on the petition under 37 C.F.R. § 1.137(b), filed December 20, 2006, to revive the above-identified application.

The petition is **GRANTED.**

The petition satisfies the conditions for revival pursuant to the provisions of 37 CFR 1.137(b) in that (1) the reply in the form of the Issue Fee Transmittal Form with payment of the issue and publication fees; (2) the petition fee; and (3) the required statement of unintentional delay have been received. Accordingly, the response has been accepted as having been unintentionally delayed.

This matter is being referred to the Publishing Division for processing into a patent.

Telephone inquiries regarding this decision should be directed to the undersigned at (571) 272-3206.

Liana Walsh
Petitions Examiner
Office of Petitions

UNITED STATES PATENT AND TRADEMARK OFFICE

Commissioner for Patents
United States Patent and Trademark Office
P.O. Box 1450
Alexandria, VA 22313-1450
www.uspto.gov

VIDAS, ARRETT & STEINKRAUS, P.A.
SUITE 400, 6640 SHADY OAK ROAD
EDEN PRAIRIE MN 553444

COPY MAILED

JUL 31 2007

OFFICE OF PETITIONS

In re Application of Dale Andersen et al Application No. 10/668,646 Filed: September 23, 2003 Attorney Docket No. D25.2H-11301-US01	DECISION GRANTING PETITION UNDER 37 CFR 1.137(b)

This is a decision on the petition under 37 CFR 1.137(b), filed March 12, 2007, to revive the above-identified application.

The petition is **GRANTED**.

The petition satisfies the conditions for revival pursuant to the provisions of 37 CFR 1.137(b) in that (1) the reply in the form of an amendment; (2) the petition fee; and (3) the required statement of unintentional delay have been received. Accordingly, the reply to the Nonfinal Rejection of May 16, 2006, is accepted as having been unintentionally delayed.

Telephone inquiries concerning this decision should be directed to the undersigned at (571) 272-3208.

This matter is being referred to Technology Center AU 3728.

Karen Creasy

Karen Creasy
Petitions Examiner
Office of Petitions

UNITED STATES PATENT AND TRADEMARK OFFICE

Commissioner for Patents
United States Patent and Trademark Office
P.O. Box 1450
Alexandria, VA 22313-1450
www.uspto.gov

RAYMOND A. MILLER
PEPPER HAMILTON LLP
ONE MELLON CENTER, 50TH FLOOR
500 GRANT STREET
PITTSBURGH, PA 15219

COPY MAILED

AUG 02 2007

OFFICE OF PETITIONS

In re Application of	:	
Wolfgang Daum	:	
Application No. 10/668,660	:	DECISION ON PETITION
Filed: September 23, 2003	:	
Attorney Docket No. 126381.1201	:	

This is a decision on the petition under 37 CFR 1.137(b), filed November 9, 2006, to revive the above-identified application.

The petition is **GRANTED.**

The application became abandoned for failure to reply in a timely manner to the Notice of Non-Compliant Amendment, mailed September 28, 2005, which set a period for reply of one (1) month. No extensions of time were obtained under the provisions of 37 CFR 1.136(a). Accordingly, the application became abandoned on October 29, 2005. A Notice of Abandonment was mailed on September 19, 2006.

The petition satisfies the requirements of 37 CFR 1.137(b) in that petitioner has supplied (1) the reply, (2) the petition fee of $750, and (3) a proper statement of unintentional delay. Accordingly, the failure to timely reply to the Office action of September 28, 2005 is accepted as being unintentionally delayed.

This application is being referred to Technology Center AU 3738 for appropriate action in the normal course of business on the reply received November 9, 2006.

Telephone inquiries concerning this decision should be directed to the undersigned at (571) 272-3218.

Frances Hicks
Petitions Examiner
Office of Petitions

UNITED STATES PATENT AND TRADEMARK OFFICE

Commissioner for Patents
United States Patent and Trademark Office
P.O. Box 1450
Alexandria, VA 22313-1450
www.uspto.gov

MERCHANT & GOULD (MICROSOFT)
P.O. BOX 2903
MINNEAPOLIS, MN 55402-0903

COPY MAILED

JUL 1 7 2008

OFFICE OF PETITIONS

In re Application of Stuart STUPLE, et al Application No. 10/668,664 Filed: September 23, 2003 Attorney Docket No. 600001.0379US01/MS302475.1	: : : : :	DECISION ON PETITION

This is a decision on the petition under the unintentional provisions of 37 CFR 1.137(b), filed June 18, 2007, to revive the above-identified application.

The petition is **GRANTED**.

The application became abandoned for failure to reply in a timely manner to the Notice of Non-Compliant Amendment mailed, September 18, 2006, which set a reply of one (1) month. No extensions of time under the provisions of 37 CFR 1.136(a) were obtained. Accordingly, the application became abandoned on October 19, 2006.

The petition satisfies the requirements of 37 CFR 1.137(b) in that petitioner has supplied (1) the reply in the form of an amendment, (2) the petition fee of $1500; and (3) the required statement of unintentional delay.

An extension of time under 37 CFR 1.136 must be filed prior to the expiration of the maximum extendable period for reply. *See* In re Application of S., 8 USPQ2d 1630, 1631 (Comm'r Pats. 1988). Since the $120 extension of time fee submitted with the petition on June 18, 2007 was subsequent to the maximum extendable period for reply, this fee is unnecessary and will be credited to petitioner's deposit account 13-2725.

Telephone inquiries concerning this decision should be directed to Diane Goodwyn at (571) 272-6735.

This application is being referred to Technology Center AU 2178 for appropriate action by the Examiner in the normal course of business on the reply received June 18, 2007.

Thurman Page
Petitions Examiner
Office of Petitions

UNITED STATES PATENT AND TRADEMARK OFFICE

Commissioner for Patents
United States Patent and Trademark Office
P.O. Box 1450
Alexandria, VA 22313-1450
www.uspto.gov

FISH & RICHARDSON P.C.
PO BOX 1022
MINNEAPOLIS MN 55440-1022

COPY MAILED

JAN 23 2007

OFFICE OF PETITIONS

In re Application of	:	
Mark C. Nicely, et al.	:	
Application No. 10/668, 670	:	DECISION ON PETITION
Filed: September 22, 2003	:	TO WITHDRAW
Attorney Docket No. 14522-002002	:	FROM RECORD
	:	

This is a decision on the Request to Withdraw as attorney or agent of record under 37 C.F.R. § 1.36(b) filed October 26, 2006.

The request is **NOT APPROVED**.

A grantable request to withdraw as attorney/agent of record must be signed by every attorney/agent seeking to withdraw or contain a clear indication that one attorney is signing on behalf of another/others. A request to withdraw will not be approved unless at least 30 (thirty) days would remain between the date of approval and the later of the expiration date of a time to file a response or the expiration date of the maximum time period which can be extended under 37 C.F.R. § 1.136(a).

The request cannot be approved because no reasons for withdrawal have been provided. The Office cannot, at this time, determine whether practitioner's request is one of the mandatory or permissive reasons enumerated in 37 CFR 10.40. Any subsequent requests must include reasons for withdrawal. Please note that there is a space provided for on PTO/SB/83 (Request to Withdraw as Attorney or Agent) to supply practitioner's reasons.

All future communications from the Office will continue to be directed to the above-listed address until otherwise notified by applicant.

There are no pending office actions at the present time.

Telephone inquiries concerning this decision should be directed to April Wise 571-272-1642.

April M. Wise
Petitions Examiner
Office of Petitions

cc: BELL, BOYD & LLOYD LLP
P.O. BOX 1135
CHICAGO, IL 60690

UNITED STATES PATENT AND TRADEMARK OFFICE

Commissioner for Patents
United States Patent and Trademark Office
P.O. Box 1450
Alexandria, VA 22313-1450
www.uspto.gov

MAILED

MAR 12 2010

OFFICE OF PETITIONS

MATTHEW J TEMMERMAN
423 E STREET
DAVIS CA 95616

In re
Nashner
Application No. 10/668,680
Filed: September 23, 2003
Patent No. 6,780,028
Issued: October 24, 2006

DECISION

This is a decision on the fee deficiency submission under 37 CFR 1.28(c), filed January 4, 2010.

The fee deficiency submission under 37 CFR 1.28 of $490 for the first maintenance fee is hereby **accepted**.

The change of status to large entity has been entered.

Telephone inquiries concerning this matter may be directed to the undersigned at (571) 272-3207.

Cliff Congo
Petitions Attorney
Office of Petitions

SPE RESPONSE FOR CERTIFICATE OF CORRECTION

DATE : 4/7/08

Paper No.: —

TO SPE OF : ART UNIT 1624

SUBJECT : Request for Certificate of Correction for Appl. No.: 10/668692 Patent No: 7022706 B2

A response is requested with respect to a request for a certificate of correction.

With respect to the change(s) requested to correct Office and/or Applicant's errors, should the patent read as shown in the certificate of correction attached herewith or the COCIN document(s), in IFW images for the above-identified patented application? No new matter should be introduced, nor should the scope or meaning of the claims be changed.

If the response is for an IFW, within 7 days, please complete and forward the response, to the employee (named below) via scanning into application images, using document code **COCX**.

If the response is for a paper file wrapper, please complete the response and forward the response with the paper file wrapper, to the employee (named below), within 7 days, to:

Certificates of Correction Branch (CofC)
South Tower - 9A22
Palm Location 7580

VIRGINIA TOLBERT
Certificates of Correction Branch
703-308-9390 ext. 113

Thank You For Your Assistance

The request for issuing the above-identified correction(s) is hereby:
Note your decision on the appropriate box.

- ☒ **Approved** — **All** changes apply.
- ☐ **Approved in Part** — Specify below which changes **do not** apply.
- ☐ **Denied** — State the reasons for denial below.

Comments: _____

SPE

1624
Art Unit

UNITED STATES PATENT AND TRADEMARK OFFICE

Commissioner for Patents
United States Patent and Trademark Office
P.O. Box 1450
Alexandria, VA 22313-1450
www.uspto.gov

DON J. CARNEGIE
SUITE 5A #540
5405 ALTON PARKWAY
IRVINE CA 92604

COPY MAILED

JUL 2 6 2005

OFFICE OF PETITIONS

In re Application of
Walker Butler et al.
Application No. 10/668,700
Filed: September 23, 2003
Attorney's Docket No. DC1006US

ON PETITION

This is a decision on the petition filed January 3, 2005 and resubmitted July 8, 2005, under 37 CFR 1.137(b), to revive the above-identified application.

The petition is **GRANTED**.

The instant application became abandoned on February 17, 2004, for failure to timely reply to the Notice to File Corrected Application Papers, mailed December 16, 2003 which set a two (2) month shortened statutory period for reply. No extensions of the time for reply in accordance with 37 CFR 1.136(a) were obtained. Accordingly, a Notice of Abandonment was mailed November 12, 2004.

Replacement Claims, as required by the Notice to File Missing Parts mailed December 16, 2003 in addition to the petition fee is acknowledged. Also, the petition and petition fee filed were received January 3, 2005. A duplicate petition and petition fee were also filed July 8, 2005. In view thereof, a refund of the second petition fee paid July 8, 2005, will be credited to deposit account 19-4415.

All other requirements having been met , this application is being forwarded to the Office of Initial Patent Examination for further pre-examination processing.

Telephone inquiries concerning this matter may be directed to the undersigned Petitions Attorney at (571) 272-3212.

Patricia Faison-Ball

Patricia Faison-Ball
Senior Petitions Attorney
Office of Petitions

UNITED STATES PATENT AND TRADEMARK OFFICE

Commissioner for Patents
United States Patent and Trademark Office
P.O. Box 1450
Alexandria, VA 22313-1450
www.uspto.gov

DON J. CARNEGIE
SUITE 5A #540
5405 ALTON PARKWAY
IRVINE CA 92604

COPY MAILED

APR 10 2007

OFFICE OF PETITIONS

In re Application of
Walker Butler
Application No. 10/668,700
Filed: September 23, 2003
Attorney Docket No. **DC1006US**

ON PETITION

This is a decision on the petition filed February 8, 2007 under 37 CFR 1.137(b), [1] to revive the above-identified application.

The petition under 37 CFR 1.137 (b) is **GRANTED**.

This application became abandoned December 23, 2006 for failure to timely pay the issue fee on or before December 22, 2006. Accordingly, a Notice of Abandonment was mailed January 29, 2007.

The issue fee, publication fee and petition fee have all been applied. All other requirements of 37 CFR 1.137(b) having now been met, this application file is being forwarded to the Publishing Division to be processed into a patent.

Telephone inquiries concerning this matter may be directed to the undersigned Petitions Attorney at (571) 272-3212.

Patricia Faison-Ball

Patricia Faison-Ball
Senior Petitions Attorney
Office of Petitions

---

[1] Effective December 1, 1997, the provisions of 37 CFR 1.137(b) now provide that where the delay in reply was unintentional, a petition may be filed to revive an abandoned application or a lapsed patent pursuant to 37 CFR 1.137(b). A grantable petition filed under the provisions of 37 CFR 1.137(b) must be accompanied by:

(1) the required reply, unless previously filed. In a nonprovisional application abandoned for failure to prosecute, the required reply may be met by the filing of a continuing application. In a nonprovisional application filed on or after June 8, 1995, and abandoned for failure to prosecute, the required reply may also be met by the filing of a request for continued examination in compliance with § 1.114. In an application or patent, abandoned or lapsed for failure to pay the issue fee or any portion thereof, the required reply must be the payment of the issue fee or any outstanding balance thereof.

(2) the petition fee as set forth in 37 CFR 1.17(m);

(3) a statement that the entire delay in filing the required reply from the due date for the reply until the filing of a grantable petition pursuant to 37 CFR 1.137(b) was unintentional. The Commissioner may required additional information where there is a question whether the delay was unintentional; and

(4) any terminal disclaimer (and fee as set forth in 37 CFR 1.20(d)) required pursuant to 37 CFR 1.137(c)).

UNITED STATES PATENT AND TRADEMARK OFFICE

Commissioner for Patents
United States Patent and Trademark Office
P.O. Box 1450
Alexandria, VA 22313-1450
www.uspto.gov

FEB 23 2005

Paper No. 092704

GLIFFORD, KRASS, GROH, SPRINKLE,
ANDERSON & CITKOWSKI, P.C.
2800 N. OLD WOODWARD, SUITE 400
BIRMINGHAM, MI 48009

In re Application of:	:	
CHRISTOPHER M. KAUTH et al.	:	
Serial No.: 10/668,709	:	DECISION ON REQUEST TO WITHDRAW
Filed: September 23, 2003	:	FROM RECORD
Attorney Docket No.: **KCH-10302/22**	:	

This is a decision on the request to withdraw as attorney/agent of record under 37 C.F.R. § 1.36, filed August 19, 2004.

A grantable request to withdraw as attorney of record must be signed by every attorney seeking to withdraw or contain a clear indication that one attorney is signing on behalf of others. A request to withdraw will not be approved unless at least thirty (30) days would remain between the date of approval and the later of the expiration date of a time to file a response or the expiration date of the maximum time period, which can be extended under 37 C.F.R. § 1.136(a).

The request meets all the above stated requirements. The request was signed by Avery N. Goldstein, on behalf of himself and all the attorneys/agents of record.

The request is **APPROVED**.

There are no attorneys of record at this time. It is noted that the application is now abandoned.

All future communications from the Office will be directed to the inventor, Joseph Neev, at the below address, until otherwise notified by applicant.

Inquiries related to this decision should be directed to Jose G. Dees (571) 272-1569.

Jose G. Dees, Special Programs Examiner
Technology Center 2800
Semiconductors, Electrical and Optical
Systems and Components

cc: CHRISTOPHER M. KAUTH
1622 BOWERS
BIRMINGHAM, MI 48009

UNITED STATES PATENT AND TRADEMARK OFFICE

Commissioner for Patents
United States Patent and Trademark Office
P.O. Box 1450
Alexandria, VA 22313-1450
www.uspto.gov

JOHN J. LEAVITT
P.O. BOX 6478
SAN JOSE CA 95150-6478

COPY MAILED

JUL 1 0 2006

OFFICE OF PETITIONS

In re Application of :
Rascon :
Application No. 10/668,712 : ON PETITION
Filed: September 23, 2003 :
Attorney Docket No. 4615 :
For: RETENTION APPARATUS AND METHOD
FOR STABILIZING CONCRETE FORMS

This is a decision on the petition under 37 CFR 1.137(a), filed on June 12, 2006 (certificate of mailing date June 11, 2006).

The petition under 37 CFR 1.137(a) is **DISMISSED**.

Any further petition to revive the above-identified application must be submitted within TWO (2) MONTHS from the mail date of this decision. Extensions of time under 37 CFR 1.136(a) are permitted. The reconsideration request should include a cover letter entitled "Petition under 37 CFR 1.137(a)." This is **not** final agency action within the meaning of 5 U.S.C. § 704.

The above-identified application became abandoned for failure to timely reply to the Notice of Allowance and Fee(s) Due, mailed February 16, 2006, which set a non-extendable three month period for reply. No timely reply being received, this application became abandoned on May 17, 2006. A Notice of Abandonment was mailed on June 23, 2006.

A grantable petition to revive an abandoned application under 37 CFR 1.137(a) must be accompanied by (1) the required reply, unless previously filed; (2) the petition fee as set forth in § 1.17(l) ($250.00); (3) a showing to the satisfaction of the Commissioner that the entire delay in filing the required reply from the due date for the reply until the filing of a grantable petition pursuant to this paragraph was unavoidable; and (4) a terminal disclaimer, if required.

Any revival petition under 37 CFR 1.137 must be accompanied by the petition fee. The payment of a petition fee to obtain the revival of an abandoned application is a statutory prerequisite to revival of the abandoned application, and cannot be waived.

The phrase "[o]n filing" in 35 U.S.C. § 41(a)(7) means that the petition fee is required for the filing (and not merely the grant) of a petition under 37 CFR 1.137. See H.R.Rep. No. 542, 97th Cong., 2d Sess. 6 (1982), *reprinted in* 1982 U.S.C.C.A.N. 770 ("[the fees set forth in this section are due on filing the petition"). Accordingly, the Director is statutorily precluded from further review of the petition until the petition fee is paid in full.

A review of Office records indicates that petitioner has paid a $700.00 issue fee, a $110.00 terminal disclaimer fee, and a $55.00 petition fee. Since a terminal disclaimer is not required in this case, the money that would have been applied to the terminal disclaimer fee will be applied towards the $250.00 petition fee. Therefore, petitioner owes $85.00.

The petition under 37 CFR 1.137(a) is dismissed.

Petitioner is urged to submit the $85.00 balance due for the petition under 37 CFR 1.137(a) The merits of the instant petition will not be addressed until the petition fee is paid.

Further correspondence with respect to this matter should be addressed as follows:

By mail: Mail Stop PETITION
Commissioner for Patents
Post Office Box 1450
Alexandria, VA 22313-1450

By hand: U.S. Patent and Trademark Office
Customer Service Window, Mail Stop Petition
Randolph Building
401 Dulany Street
Alexandria, VA 22314

By FAX: (571) 273-8300 - ATTN: Office of Petitions

Telephone inquiries pertaining to this matter may be directed to the undersigned at(571) 272-3230.

Shirene Willis Brantley

Shirene Willis Brantley
Senior Petitions Attorney
Office of Petitions

UNITED STATES PATENT AND TRADEMARK OFFICE

Commissioner for Patents
United States Patent and Trademark Office
P.O. Box 1450
Alexandria, VA 22313-1450
www.uspto.gov

JOHN J. LEAVITT
P.O. BOX 6478
SAN JOSE CA 95150-6478

COPY MAILED
OCT 13 2006
OFFICE OF PETITIONS

In re Application of :
Rascon :
Application No. 10/668,712 : ON PETITION
Filed: September 23, 2003 :
Attorney Docket No. 4615 :
For: RETENTION APPARATUS AND METHOD
FOR STABILIZING CONCRETE FORMS

This is a decision on the reconsideration petition under 37 CFR 1.137(a), filed on July 19, 2006.

The petition under 37 CFR 1.137(a) is **DISMISSED**.

Any further petition to revive the above-identified application must be submitted within TWO (2) MONTHS from the mail date of this decision. Extensions of time under 37 CFR 1.136(a) are permitted. The reconsideration request should include a cover letter entitled "Petition under 37 CFR 1.137(a)." This is **not** final agency action within the meaning of 5 U.S.C. § 704.

The above-identified application became abandoned for failure to timely reply to the Notice of Allowance and Fee(s) Due, mailed February 16, 2006, which set a non-extendable three month period for reply. No timely reply being received, this application became abandoned on May 17, 2006. A Notice of Abandonment was mailed on June 23, 2006.

A grantable petition to revive an abandoned application under 37 CFR 1.137(a) must be accompanied by (1) the required reply, unless previously filed; (2) the petition fee as set forth in § 1.17(l) ($250.00); (3) a showing to the satisfaction of the Commissioner that the entire delay in filing the required reply from the due date for the reply until the filing of a grantable petition pursuant to this paragraph was unavoidable; and (4) a terminal disclaimer, if required.

The petition does not satisfy (3) above.

Petitioner asserts incapacitation as the cause of the delay. The showing found in the petition fails

to evidence how Mr. Leavitt's health problems caused the unavoidable delay in the timely submission of the issue fee and completed PTOL-85(b) Fee Transmittal.

A showing of "unavoidable" delay based upon incapacitation must establish that petitioner's incapacitation was of such nature and degree as to render petitioner unable to conduct business (*e.g.*, correspond with the Office) during the period between February 16, 2006 and May 16, 2006. The showing must be supported by a statement from petitioner's treating physician, and such statement must provide the nature and degree of petitioner's incapacitation during this above-mentioned period.

Any request for reconsideration must be accompanied by an adequate showing as to: (1) The steps taken by Mr. Leavitt to respond to the Notice at issue (Was the due date docketed in his system?); (2) Mr. Leavitt's precarious medical condition between February 16, 2006 through May 16, 2006, as documented by medical records of attending physicians; and (3) How such medical condition actually caused or contributed to Mr. Leavitt's failure to timely respond to the February 16, 2006 Notice.

Mr. Leavitt states that his health was poor for years. The original petition states that in late 2005 he experienced a flare-up of the disease that essentially rendered him immobile. It is noted that on January 26, 2006 petitioner filed an amendment after final in this case. At some unspecified time in early 2006 Mr. Leavitt experienced swelling in his left arm and left hand. Mr. Leavitt had hip problems. What arrangements did Mr. Leavitt make to ensure rigorous representation of his clients during his illness?

Petitioner should consider filing a petition stating that the delay was unintentional. Public Law 97-247, § 3, 96 Stat. 317 (1982), which revised patent and trademark fees, amended 35 U.S.C. § 41(a)(7) to provide for the revival of an "unintentionally" abandoned application without a showing that the delay in prosecution or in late payment of an issue fee was "unavoidable." This amendment to 35 U.S.C. § 41(a)(7) has been implemented in 37 CFR 1.137(b). An "unintentional" petition under 37 CFR 1.137(b) must be accompanied by the $ 750.00 petition fee.

The filing of a petition under 37 CFR 1.137(b) cannot be intentionally delayed and therefore must be filed promptly. A person seeking revival due to unintentional delay can not make a statement that the delay was unintentional unless the entire delay, including the delay from the date it was discovered that the application was abandoned until the filing of the petition to revive under 37 CFR 1.137(b), was unintentional. A statement that the delay was unintentional is not appropriate if petitioner intentionally delayed the filing of a petition for revival under 37 CFR 1.137(b).

Further correspondence with respect to this matter should be addressed as follows:

By mail: Mail Stop PETITION
Commissioner for Patents
Post Office Box 1450
Alexandria, VA 22313-1450

By hand: U.S. Patent and Trademark Office
Customer Service Window, Mail Stop Petition
Randolph Building
401 Dulany Street
Alexandria, VA 22314

By FAX: (571) 273-8300 - ATTN: Office of Petitions

Telephone inquiries pertaining to this matter may be directed to the undersigned at(571) 272-3230.

Shirene Willis Brantley

Shirene Willis Brantley
Senior Petitions Attorney
Office of Petitions

UNITED STATES PATENT AND TRADEMARK OFFICE

Commissioner for Patents
United States Patent and Trademark Office
P.O. Box 1450
Alexandria, VA 22313-1450
www.uspto.gov

JOHN J. LEAVITT
P.O. BOX 6478
SAN JOSE CA 95150-6478

COPY MAILED

MAR 2 6 2007

OFFICE OF PETITIONS

In re Application of :
Rascon :
Application No. 10/668,712 : ON PETITION
Filed: September 23, 2003 :
Attorney Docket No. 4615 :
For: RETENTION APPARATUS AND METHOD
FOR STABILIZING CONCRETE FORMS

This is a decision on the petition under 37 CFR 1.137(b), filed on January 20, 2007.

The petition under 37 CFR 1.137(b) is **GRANTED**.

The above-identified application became abandoned for failure to timely reply to the Notice of Allowance and Fee(s) Due, mailed February 16, 2006, which set a non-extendable three month period for reply. No timely reply being received, this application became abandoned on May 17, 2006. A Notice of Abandonment was mailed on June 23, 2006.

Applicant has submitted a proper reply in the form of the issue fee and a completed PTOL-85B, an acceptable statement of the unintentional nature of the delay in responding to the February 16, 2006 Notice of Allowance and Fee(s) Due, and the petition fee. Therefore, the petition is **granted**.

This application is being forwarded to Publishing Division for processing into a patent.

Telephone inquiries concerning this matter may be directed to the undersigned at (571) 272-3230.

Shirene Willis Brantley
Senior Petitions Attorney
Office of Petitions

UNITED STATES PATENT AND TRADEMARK OFFICE

COMMISSIONER FOR PATENTS
UNITED STATES PATENT AND TRADEMARK OFFICE
P.O. BOX 1450
ALEXANDRIA, VA 22313-1450
www.uspto.gov

Paper No.

LANNY R. LEE
5090 N. HARBOR CITY BLVD
MELBOURNE, FL 32940

COPY MAILED

MAY 13 2004

OFFICE OF PETITIONS

In re Application of :
Lanny R. Lee :
Application No. 10/668,742 :
Filed: October 6, 2003 :
Title of Invention: EXPANSION :
MOTOR :

DECISION ON PETITION

This is a decision on the correspondence filed April 14, 2004, in response to a Notice to File Corrected Application Papers. The correspondence is properly treated as a Petition Under 37 CFR 1.182.

Background

The application was filed on October 6, 2003. On February 13, 2004, the Office of Initial Patent Examination mailed a Notice to File Corrected Application Papers (hereinafter "Notice"), stating, *inter alia*, that the application had been accorded a filing date, and requiring replacement claims and abstract commencing on separate sheets in compliance with 37 CFR §§ 1.75(h) 1.72(b) respectively. The Notice further informed Applicant that Figure 8b described in the specification appeared to have been omitted from the application.

Applicant responds with the petition and an abstract and claims commencing on separate sheets. Regarding Figure 8b, Applicant avers that there is an error in the drawings and the description, and also notes that other mistakes have been discovered. Applicant avers that the mistakes "can be fixed without adding material to the description."

It appears that Applicant is asserting that changes may be corrected without adding new matter to the original disclosure. Applicant is advised that a preliminary amendment to the application may be filed correcting errors in the application, so long as the preliminary amendment contains no new matter.

A preliminary amendment may be used to correct errors in the drawings as well as errors in the description without the need for a petition. The issue of new matter is one appropriately addressed by the examiner.

Applicant also wonders whether it is possible to come to the Office for help with his application. Applicant is advised to contact the Office of Independent Inventors here at the USPTO, at (703) 306-5568, for assistance in prosecuting his application. The Office of Independent Inventors is designed to assist those applicants who do not have an attorney to file and prosecute their patent applications. Applicant may also contact the Patent Assistance Center at (800) 786-9199. The Patent Assistance Center is staffed by retired patent examiners who provide assistance to applicants in navigating the prosecution of their application.

The petition is dismissed. Since the present petition was not necessitated by any error on the part of the Office, the $130.00 petition fee will not be refunded.

The application is being returned to the Office of Initial Patent Examination for processing of the abstract and claims sheets with a filing date of October 6, 2003.

Telephone inquiries concerning this matter should be directed to the undersigned at (703) 305-0014.

Derek L. Woods
Petitions Attorney
Office of Petitions

UNITED STATES PATENT AND TRADEMARK OFFICE

Commissioner for Patents
United States Patent and Trademark Office
P.O. Box 1450
Alexandria, VA 22313-1450
www.uspto.gov

NOV 19 2004

MAILED

NOV 19 2004

OFFICE OF THE DIRECTOR
TC 3600

Lanny R. Lee
5090 N. Harbor City Blvd.
Melbourne, FL 32940

In re application of Lanny R. Lee Application No. 10/668,742 Filed: October 6, 2003 For: EXPANSION MOTOR	: : :	**DECISION ON PETITION TO MAKE SPECIAL (APPLICANT'S AGE)**

This is a decision on the petition submitted on October 7, 2004 under 37 CFR 1.102 (c) to make the above-identified application special under the accelerated examination procedure set forth in MPEP 708.02, Section IV: Applicant's Age.

The petition is **GRANTED**.

An application may be accorded special status upon the filing of a petition providing evidence showing that the applicant is at least 65 years old. Such a showing may be provided by evidence such as a birth certificate or a statement from the applicant.

The evidence submitted with the petition is a drivers license for Lanny R. Lee indicating that he is at least 65 years of age.

The examiner is directed (1) to make an interference search for possible interfering applications, (2) to promptly examine this application out of turn, and (3) if any interfering application is discovered, to examine such application simultaneously and state in the first official letter of such application that it is being taken out of turn because of a possible interference.

Petitioner is advised that this application will continue to be special, throughout its entire prosecution and pendency, including interference or appeal, if any, only if petitioner makes a prompt ***bona fide*** effort, in response to each Office action, to place the application in condition for allowance, even if it is necessary to conduct an interview with the examiner to accomplish this purpose.

SUMMARY: Petition to Make Special **GRANTED**.

Randolph A. Reese
Special Programs Examiner
Technology Center 3600
(703) 308-2121

RAR/dcg: 11/12/04

UNITED STATES PATENT AND TRADEMARK OFFICE

UNITED STATES DEPARTMENT OF COMMERCE
United States Patent and Trademark Office
Address: COMMISSIONER FOR PATENTS
P.O. Box 1450
Alexandria, Virginia 22313-1450
www.uspto.gov

SCHWEGMAN, LUNDBERG & WOESSNER, P.A.
P.O. BOX 2938
MINNEAPOLIS, MN 55402

Mail Date: 04/20/2010

Applicant	: David W. Boggs	: DECISION ON REQUEST FOR
Patent Number	: 7583513	: RECALCULATION of PATENT
Issue Date	: 09/01/2009	: TERM ADJUSTMENT IN VIEW
Appliction No	: 10/668,745	: OF WYETH
Filed	: 09/23/2003	:
		:

The Patentee's Request for Recalculation is **DISMISSED.**

This Request is deemed ineligible for consideration for one or more of the following reasons:

(A). The patent for which PTA recalculation is requested is either a design or reissue application or is a reexamination proceeding;

(B). The patent for which PTA recalculation is requested resulted from a utility or plant application filed under 35 USC 111(a) before May 29, 2000 and no CPA filed in the application on/after May 29, 2000;

(C). The patent for which PTA recalculation is requested resulted from an international application in which the international filing date was before May 29, 2000 and no CPA filed in the application on/after May 29, 2000;

(D). The patent for which PTA recalculation is requested issued on/after March 2, 2010;

(E). The Request for Recalculation was filed more than 180 days after the grant date of the patent and the request was not filed within two months of a dismissal of a request for reconsideration of the of the patent term under 37 CFR 1.705(d);

(F). The Request for Recalculation is not solely limited to USPTO pre-Wyeth interpretation of 35 U.S.C. 154(b)(2)(A);

or

(G). A civil action was filed pursuant to 35 U.S.C. 154(b)(4)(A)concerning the same patent at issue in this request.

Patentee may file a reply to this decision dismissing the Request for Recalculation. Patentee must file such reply within one month or thirty days, whichever is longer, of the mail date of the decision dismissing the Request for Recalculation. No fee is required if patentee is asserting in the reply that the dismissal for ineligibility is improper.

Patentee should use document code PET.OP if electronically filing a reply to this dismissal. If the USPTO finds that the request was improperly deemed ineligible, the USPTO will mail applicant a recalculation determination.

Patentee should be aware that in order to preserve the right to review in the United States District Court for the District of Columbia of the USPTO patent term adjustment determination, patentee must ensure that he or she also take the steps required under 35 U.S.C. 154(b)(4)(A). Nothing in the request for recalculation should be construed as providing an alternative time frame for commencing a civil action under 35 U.S.C. 154 (b)(4)(A).

Any questions concerning this decision should be directed to the Office of Patent Legal Administration at 571-272-7702.

UNITED STATES PATENT AND TRADEMARK OFFICE

Commissioner for Patents
United States Patent and Trademark Office
P.O. Box 1450
Alexandria, VA 22313-1450
www.uspto.gov

STANDLEY LAW GROUP LLP
495 METRO PLACE SOUTH
SUITE 210
DUBLIN OH 43017

COPY MAILED
MAR 1 6 2005
OFFICE OF PETITIONS

In re Application of :
Shigeru Kobayashi et al. :
Application No. 10/668,762 : ON PETITION
Filed: September 23, 2003 :
Attorney Docket Number: OCH 1846-003 :

This is a decision on the petition under 37 CFR 1.137(b),[1] filed October 22, 2004, to revive the above-identified application.

The petition is **GRANTED**.

This application became abandoned April 5, 2004, for failure to timely reply to the Notice to File Missing Parts mailed on February 4, 2004, which set a two (2) month shortened period for reply. No extensions of the time for reply in accordance with 37 CFR 1.136(a) were obtained prior to the abandonment. This petition and decision precedes the mailing of a Notice of Abandonment.

---

[1]Effective December 1, 1997, the provisions of 37 CFR 1.137(b) now provide that where the delay in reply was unintentional, a petition may be filed to revive an abandoned application or a lapsed patent pursuant to 37 CFR 1.137(b). A grantable petition filed under the provisions of 37 CFR 1.137(b) must be accompanied by:

(1) the required reply, unless previously filed. In a nonprovisional application abandoned for failure to prosecute, the required reply may be met by the filing of a continuing application. In a nonprovisional application filed on or after June 8, 1995, and abandoned for failure to prosecute, the required reply may also be met by the filing of a request for continued examination in compliance with § 1.114. In an application or patent, abandoned or lapsed for failure to pay the issue fee or any portion thereof, the required reply must be the payment of the issue fee or any outstanding balance thereof. In an application abandoned for failure to pay the publication fee, the required reply must include payment of the publication fee.

(2) the petition fee as set forth in 37 CFR 1.17(m);

(3) a statement that the entire delay in filing the required reply from the due date for the reply until the filing of a grantable petition pursuant to 37 CFR 1.137(b) was unintentional. The Commissioner may required additional information where there is a question whether the delay was unintentional; and

(4) any terminal disclaimer (and fee as set forth in 37 CFR 1.20(d)) required pursuant to 37 CFR 1.137(c)).

Receipt of the oath or declaration is acknowledged.

Additionally, pursuant to 37 CFR 1.136, an extension of time must be filed prior to the expiration of the maximum period obtainable for reply to avoid abandonment. Accordingly, since the $2080.00 extension of time fee submitted with the petition on October 22, 2004, was subsequent to the maximum period obtainable for reply, this fee is unnecessary and will be credited to counsel's deposit account no. 19-4076.

The application is being forwarded to the Office of Initial Patent Examination for further processing.

Telephone inquiries concerning this matter should be directed to the undersigned Petitions Attorney at (571) 272-3212.

Patricia Faison-Ball

Patricia Faison-Ball
Senior Petitions Attorney
Office of Petitions

UNITED STATES PATENT AND TRADEMARK OFFICE

Commissioner for Patents
United States Patent and Trademark Office
P.O. Box 1450
Alexandria, VA 22313-1450
www.uspto.gov

AFS / ANGIODYNAMICS
666 THIRD AVENUE
FLOOR 10
NEW YORK NY 10017

COPY MAILED
NOV 05 2008

In re Application of	:
Chornenky et al.	:
Application No. 10/668775	: DECISION ON PETITION
Filing or 371(c) Date: 09/23/2003	: UNDER 37 CFR 1.78(a)(6)
Title of Invention: APPARATUS AND	:
METHOD FOR THE TREATMENT OF	:
BENIGN PROSTATIC HYPERPLASIA	:

This is a decision on the Petition Under 37 C.F.R. § 1.78(a)(6) to Accept Unintentionally Delayed Claim for Benefit Under 35 U.S.C. 119(e)," filed September 23, 2008, to accept an unintentionally delayed claim under 35 U.S.C. § 119(e) for the benefit of priority to a prior-filed provisional application.

The petition is **DISMISSED.**

A petition under 37 CFR 1.78(a)(6) is only applicable to those applications filed on or after November 29, 2000. Further, the petition is appropriate only after expiration of the period specified in 37 CFR 1.78(a)(5)(ii) and <u>must be filed during the pendency of the nonprovisional application</u>. In addition, the petition must be accompanied by:

(1) the reference required by 35 U.S.C. § 119(e) and 37 CFR 1.78(a)(5)(i) to the prior-filed application, unless previously submitted;
(2) the surcharge set forth in § 1.17(t); and
(3) a statement that the entire delay between the date the claim was due under 37 CFR 1.78(a)(5)(ii) and the date the claim was filed was unintentional. The Director may require additional information where there is a question whether the delay was unintentional.

This petition fails to satisfy item (1) above. In this regard, 37 CR 1.78(a)(5)(ii) requires that a claim for benefit of priority to a prior-filed provisional application must be submitted during the pendency of the application. Further to this, the MPEP 201.11(E) provides: If the later-filed application is a utility or plant application filed on or after November 29, 2000, the reference to the prior-filed application must be submitted within the time period set forth in 37 CFR 1.78(a) (e.g., <u>during</u>

the pendency of the later-filed application and within the later of 4 months from the actual filing date of the later-filed application or 16 months from the filing date of the prior-filed application) for a benefit claim under 35 U.S.C. 120, 121, or 365(c), and also for benefit claim under 35 U.S.C. 119(e). (Emphasis supplied).

As such, a Certificate of Correction is not a valid mechanism for adding or correcting a priority claim under 35 U.S.C. § 119(e) after a patent has been granted on an application filed on or after November 29, 2000. *See* MPEP 1481.03. Therefore, as this application matured into Patent No. 6,697,670 on February 24, 2004, a claim for benefit of priority to the above-noted provisional application cannot now be added by way of a Certificate of Correction.

Applicant may attempt to add the benefit claim by way of reissue. The MPEP 1481.03 provides:

> Where the application, which became the patent to be reissued, was filed on or after November 29, 2000, reissue may be employed to correct an applicant's mistake by adding or correcting a benefit claim under 35 U.S.C. 119(e). A petition under 37 CFR 1.78(a)(6) for an unintentionally delayed claim under 35 U.S.C. 119(e) would not be required in addition to filing a reissue application.
> Section 4503 of the American Inventors Protection Act of 1999 (AIPA) amended 35 U.S.C. 119(e)(1) to state that:
>
> > No application shall be entitled to the benefit of an earlier filed provisional application under this subsection unless an amendment containing the specific reference to the earlier filed provisional application is submitted at such time during the pendency of the application as required by the Director. The Director may consider the failure to submit such an amendment within that time period as a waiver of any benefit under this subsection. The Director may establish procedures, including the payment of a surcharge, to accept an unintentionally delayed submission of an amendment under this section ***during the pendency of the application***. (Emphasis added.)
>
> The court in Fontijn held that 35 U.S.C. 251 was sufficiently broad to correct a patent where the applicant failed to assert or failed to perfect a claim for foreign priority during the prosecution of the original application even though 35 U.S.C. 119(b) at that time required a claim and a certified copy of the foreign application to be filed before the patent is granted. Similarly, the Office may grant a reissue for adding or correcting a benefit claim under 35 U.S.C.119(e) that requires the benefit claim to a provisional application be submitted during the pendency of the application. (Emphasis supplied).

Further correspondence with respect to this matter should be addressed as follows:

By mail: Mail Stop PETITIONS
Director for Patents
Post Office Box 1450
Alexandria, VA 22313-1450

By hand: Customer Service Window
Mail Stop Petitions
Randolph Building
401 Dulany Street
Alexandria, VA 22314

By fax: (571) 273-8300
ATTN: Office of Petitions

Any questions concerning this matter may be directed to Derek Woods at (571) 272-3232.

Anthony Knight
Supervisor
Office of Petitions

UNITED STATES DEPARTMENT OF COMMERCE
Patent and Trademark Office
ASSISTANT SECRETARY OF COMMERCE AND
COMMISSIONER OF PATENTS AND TRADEMARKS
Washington, DC 20231

12/12/08

Patent No. :7130697
Inventor(s) :Chornenky et al.
Issued : 10/31/2006
Title : APPARATUS AND METHOD FOR THE TREATMENT OF BEGIGN PROSTATIC HYPERPLASIA
Atty.doc./File No.

Request for Certificates of Correction

Consideration has been given to your request for the issuance of a Certificate of Correction, for the above – identified patent under the provisions of CFR 1.322.

Inspection of the application for the patent reveals item [60] is printed in accordance and the petitions office has dismissed this request. Therefore being no fault on the Patent and Trademark Office, It has no authority to issue a certificate of correction under the provision of 1.322.

In view of the forgoing, your request in this matter, is hereby denied.

Future written correspondence concerning this matter should be filed and directed to Decisions & Certificates of Correction Branch.

Henry Randall
Cecelia Newman
Decisions & Certificates
of Correction Branch
(703) 308-9390 Ext. 108

ABELMAN FRAYNE & SCHWAB.
666 THIRD AVENUE 10TH FLOOR
NEW YORK, NY 10016

HR/MD

UNITED STATES PATENT AND TRADEMARK OFFICE

Commissioner for Patents
United States Patent and Trademark Office
P.O. Box 1450
Alexandria, VA 22313-1450
www.uspto.gov

MEDTRONIC, INC.
710 MEDTRONIC PARKWAY NE
MINNEAPOLIS MN 55432-9924

COPY MAILED

DEC 0 9 2008

OFFICE OF PETITIONS

In re Application of	:	
Zhao D. Yong, et al.	:	
Application No. 10/668,789	:	ON PETITION
Filed: September 23, 2003	:	
Attorney Docket No. P0010040.00	:	

This is a decision on the petition under the unintentional provisions of 37 CFR 1.137(b), filed August 21, 2008, to revive the above-identified application.

The petition is **GRANTED**.

The application became abandoned for failure to timely file a reply within the meaning of 37 CFR 1.113 to the final Office action of January 30, 2008. The proposed reply required for consideration of a petition to revive must be a Notice of Appeal (and appeal fee required by 37 CFR 41.20(b)(2), an amendment that *prima facie* places the application in condition for allowance, a Request for Continued Examination and submission (37 CFR 1.114), or the filing of a continuing application under 37 CFR 1.53(b). See MPEP 711.03(c)(III)(A)(2). No extensions of time pursuant to the provisions of 37 CFR 1.136(a) were obtained. Accordingly, the date of abandonment of this application is May 1, 2008.

The petition satisfies the requirements of 37 CFR 1.137(b) in that petitioner has supplied (1) the reply in the form of a Request for Continued Examination (RCE) and fee of $810, and the submission required by 37 CFR 1.114; (2) the petition fee of $1,540; and (3) a proper statement of unintentional delay.

It is not apparent whether the person signing the statement of unintentional delay was in a position to have firsthand or direct knowledge of the facts and circumstances of the delay at issue. Nevertheless, such statement is being treated as having been made as the result of a reasonable inquiry into the facts and circumstances of such delay. See 37 CFR 10.18(b) and Changes to Patent Practice and Procedure; Final Rule Notice, 62 Fed. Reg. 53131, 53178 (October 10, 1997), 1203 Off. Gaz. Pat. Office 63, 103 (October 21, 1997). In the event that such an inquiry has not been made, petitioner must make such an inquiry. If such inquiry results in the discovery that it is not correct that the entire delay in filing the required reply from the due

date for the reply until the filing of a grantable petition pursuant to 37 CFR 1.137(b) was unintentional, petitioner must notify the Office.

There is no indication that the person signing the petition was ever given a power of attorney to prosecute the application. If the person signing the petition desires to receive future correspondence regarding this application, the appropriate power of attorney document must be submitted. While a courtesy copy of this decision is being mailed to the person signing the petition, all future correspondence will be directed to the address currently of record until appropriate instructions are received.

An extension of time under 37 CFR 1.136 must be filed prior to the expiration of the maximum extendable period for reply. See In re Application of S., 8 USPQ2d 1630, 1631 (Comm'r Pats. 1988). Since the $1,050 extension of time fee submitted with the petition on August 21, 2008 was subsequent to the maximum extendable period for reply, this fee is unnecessary and will be credited to petitioner's deposit account.

Telephone inquiries concerning this decision should be directed to Terri Williams at (571) 272-2991.

This application is being referred to Technology Center AU 3762 for processing of the RCE and for appropriate action by the Examiner in the normal course of business on the amendment submitted in accordance with 37 CFR 1.114.

Chris Bottorff
Petitions Examiner
Office of Petitions

cc: **William D. Bauer**
IPLM Group, P.A.
P.O. Box 18455
Minneapolis, MN 55418

UNITED STATES PATENT AND TRADEMARK OFFICE

Commissioner for Patents
United States Patent and Trademark Office
P.O. Box 1450
Alexandria, VA 22313-1450
www.uspto.gov

INTELLECTUAL PROPERTY / TECHNOLOGY LAW
PO BOX 14329
RESEARCH TRIANGLE PARK NC 27709

MAILED

JAN 30 2009

OFFICE OF PETITIONS

In re Application of	:	
Bernard E. Cabana et al.	:	
Application No. 10/668,792	:	ON PETITION
Filed: September 23, 2003	:	
Attorney Docket No. 4354-110	:	

This is a decision on the petition under the unintentional provisions of 37 CFR 1.137(b), filed October 21, 2008, to revive the above-identified application.

The petition is **GRANTED**.

The application became abandoned for failure to timely file a reply within the meaning of 37 CFR 1.113 to the final Office action of September 17, 2007. The proposed reply required for consideration of a petition to revive must be a Notice of Appeal (and appeal fee required by 37 CFR 41.20(b)(2), an amendment that *prima facie* places the application in condition for allowance, a Request for Continued Examination and submission (37 CFR 1.114), or the filing of a continuing application under 37 CFR 1.53(b). See MPEP 711.03(c)(III)(A)(2). A three (3) month extension of time pursuant to the provisions of 37 CFR 1.136(a) was obtained. Accordingly, the date of abandonment of this application is December 18, 2007.

The petition satisfies the requirements of 37 CFR 1.137(b) in that petitioner has supplied (1) the reply in the form of a Request for Continued Examination (RCE) and fee of $405.00, and the submission required by 37 CFR 1.114; (2) the petition fee of $810.00; and (3) a proper statement of unintentional delay.

Copied from 10688792 on 03/19/2009

It is not apparent whether the statement of unintentional delay was signed by a person who would have been in a position of knowing that the entire delay in filing the required reply from the due date for the reply until the filing of a grantable petition pursuant to 37 CFR 1.137(b) was unintentional. Nevertheless, in accordance with 37 CFR 10.18, the statement is accepted as constituting a certification of unintentional delay. However, in the event that petitioner has no knowledge that the delay was unintentional, petitioner must make such an inquiry to ascertain that, in fact, the delay was unintentional. If petitioner discovers that the delay was intentional, petitioner must so notify the Office.

Telephone inquiries concerning this decision should be directed to JoAnne Burke at (571) 272-4584.

This application is being referred to Technology Center AU 1614 for processing of the RCE and for appropriate action by the Examiner in the normal course of business on the amendment submitted in accordance with 37 CFR 1.114.

Ramesh Krishnamurthy

Ramesh Krishnamurthy
Petitions Examiner
Office of Petitions

Copied from 10688792 on 03/19/2009

UNITED STATES PATENT AND TRADEMARK OFFICE

UNITED STATES DEPARTMENT OF COMMERCE
United States Patent and Trademark Office
Address: COMMISSIONER FOR PATENTS
P.O. Box 1450
Alexandria, Virginia 22313-1450
www.uspto.gov

WOLF GREENFIELD & SACKS, P.C.
600 ATLANTIC AVENUE
BOSTON, MA 02210-2206

Mail Date: 04/21/2010

Applicant	: Sophie Gabriele	: DECISION ON REQUEST FOR
Patent Number	: 7594119	: RECALCULATION of PATENT
Issue Date	: 09/22/2009	: TERM ADJUSTMENT IN VIEW
Appliction No	: 10/668,795	: OF WYETH AND NOTICE OF INTENT TO
Filed	: 09/23/2003	: ISSUE CERTIFICATE OF CORRECTION
		:

The Request for Recalculation is **GRANTED** to the extent indicated.

The patent term adjustment has been determined to be **1119** days. The USPTO will *sua sponte* issue a certificate of correction reflecting the amount of PTA days determined by the recalculation.

Prior to the issuance of the certificate of correction, the USPTO will afford patentee an opportunity to be heard and request reconsideration. Accordingly, patentee has **one month or thirty (30) days**, whichever is longer, to file a request for reconsideration of this patent term adjustment calculation. See 35 U.S.C. 154(b)(3)(B)(ii) and 37 CFR 1.322(a)(4). No extensions of time will be granted under 37 CFR 1.136.

Patentee should use document code PET.OP if electronically filing a request for reconsideration of this patent term adjustment calculation. The patentee must also include the information required by 37 CFR 1.705(b)(2) and the fee required by 37 CFR 1.18(e). If patentee does not file a timely request for reconsideration of this patent term adjustment calculation including the information required by 37 CFR 1.705(b)(2) and the fee required by 37 CFR 1.18(e), the USPTO will issue a certificate of correction reflecting the PTA determination noted above.

Patentee should be aware that in order to preserve the right to review in the United States District Court for the District of Columbia of the USPTO patent term adjustment determination, patentee must ensure that he or she also take the steps required under 35 U.S.C. 154(b)(4)(A) in a timely manner. Nothing in the request for recalculation should be construed as providing an alternative time frame for commencing a civil action under 35 U.S.C. 154(b)(4)(A).

Any questions concerning this decision should be directed to the Office of Patent Legal Administration at 571-272-7702.

UNITED STATES PATENT AND TRADEMARK OFFICE

Commissioner for Patents
United States Patent and Trademark Office
P.O. Box 1450
Alexandria, VA 22313-1450
www.uspto.gov

COPY MAILED

FEB 1 1 2008

OFFICE OF PETITIONS

LAW OFFICE OF PHILIP A STEINER
1212 MARSH STREET
SUITE 3
SAN LUIS OBISPO CA 93401

In re Application of

LIMBERG, Michael B. et al.
Application No. 10/668,816
Filed: September 22, 2003
Attorney Docket No. **UT09082003**

DECISION ON PETITION
TO WITHDRAW
FROM RECORD

This is a decision on the Request to Withdraw as attorney or agent of record under 37 C.F.R. § 1.36(b), filed September 25, 2007 and re-submitted October 05, 2007.

The request is **APPROVED**.

A grantable request to withdraw as attorney/agent of record must be signed by every attorney/agent seeking to withdraw or contain a clear indication that one attorney is signing on behalf of another/others. A request to withdraw will not be approved unless at least 30 (thirty) days would remain between the date of approval and the later of the expiration date of a time to file a response or the expiration date of the maximum time period which can be extended under 37 C.F.R. § 1.136(a).

The request was signed by Phillip Steiner on behalf of all attorneys of record who are associated.
All attorneys/agents associated have been withdrawn. Applicant is reminded that there is no attorney of record at this time.

The request to change the correspondence of record is not acceptable as the requested correspondence address is not that of: (1) the first named signing inventor; or (2) an intervening assignee of the entire interest under 37 C.F.R 3.71. All future communications from the Office will be directed to the first named signing inventor at the first copied address below until otherwise properly notified by the applicant.

There is an outstanding Office action mailed December 13, 2007 that requires a reply from the applicant.

Telephone inquiries concerning this decision should be directed to Tredelle Jackson at 571-272-2783.

Monica A. Graves
Petitions Examiner
Office of Petitions

cc: **MICHAEL B. LIMBERG**
2149 SANTA YNEZ AVENUE
SAN LUIS OBISPO, CA 93405

cc: **L & G SOFT**
1270 PEACH STREET
SAN LUIS OBISPO, CA 93401

UNITED STATES PATENT AND TRADEMARK OFFICE

Commissioner for Patents
United States Patent and Trademark Office
P.O. Box 1450
Alexandria, VA 22313-1450
www.uspto.gov

James S. Tak
Assistant Laboratory Counsel
Lawrence Livermore National Laboratory
P.O. Box 808, L-703
Livermore, CA 94551

COPY MAILED
JAN 0 5 2006
OFFICE OF PETITIONS

In re Application of

Ortega, et al.

Application No. 10/668,820

Filed: September 22, 2003

Attorney Docket No. IL-11091

DECISION ON PETITION

This is a decision on the petition under 37 CFR §1.137(b), December 2, 2005, to revive the above-identified application.

The petition is **granted**.

This application became abandoned On November 23, 2005, for failure to timely respond to the Notice of Allowance and Issue Fee Due and the Notice of Allowability mailed August 22, 2005. The notices allowed a three-month period for response. No response was received within the allowed period and the application became abandoned on November 23, 2005.

The issue fee and publication fee were received on December 22, 2005.

The corrected drawings, filed December 22, 2005, are noted.

The application file is being forwarded to the Office of Patent Publications for further processing.

Telephone inquiries concerning this matter may be directed to the undersigned at (571) 272-3222.

Kenya A. McLaughlin
Petitions Attorney
Office of Petitions

SPE RESPONSE FOR CERTIFICATE OF CORRECTION

Paper No.:20051229

DATE : December 29, 2005

TO SPE OF : ART UNIT 3751

SUBJECT : Request for Certificate of Correction on Patent No.: 6,932,421

A response is requested with respect to the accompanying request for a certificate of correction.

Please complete this form and return with file, within **7** days to:
Certificates of Correction Branch - PK 3-910
Palm location **7590** - Tel. No. 305-8201

With respect to the change(s) requested, correcting Office and/or Applicant's errors, should the patent read as shown in the certificate of correction? No new matter should be introduced, nor should the scope or meaning of the claims be changed.

Thank You For Your Assistance **Certificates of Correction Branch**

The request for issuing the above-identified correction(s) is hereby:
Note your decision on the appropriate box.

☒ **Approved** All changes apply.

☐ **Approved in Part** Specify below which changes **do not** apply.

☐ **Denied** State the reasons for denial below.

Comments:

SPE: Justine R. Yu **Art Unit** 3751

SPE Yuen

SPE RESPONSE FOR CERTIFICATE OF CORRECTION 10/668,854

Paper No.: _____

DATE : 1/24/06

TO SPE OF : ART UNIT 3747

SUBJECT : Request for Certificate of Correction on Patent No.: 6779506

A response is requested with respect to the accompanying request for a certificate of correction.

Please complete this form and return with file, within 7 days to:
Palm location **7580, Certificates of Correction Branch – South Tower – 9A22**
If response is for an IFW, **return to employee (named below) via PUBSCofC Team in MADRAS.**
With respect to the change(s) requested, correcting Office and/or Applicant's errors, should the patent read as shown in the certificate of correction (COCIN)? No new matter should be introduced, nor should the scope or meaning of the claims be changed.

Thank You For Your Assistance

Lamonte M. Newsome
Certificates of Correction Branch
Tel. No. 703-305-8309

The request for issuing the above-identified correction(s) is hereby:
Note your decision on the appropriate box.

- ☑ **Approved** — **All** changes apply.
- ☐ **Approved in Part** — Specify below which changes **do not** apply.
- ☐ **Denied** — State the reasons for denial below.

Comments:

Henry C. Yuen
Supervisory Patent Examiner
Group 3700

SPE 3747 **Art Unit**

UNITED STATES PATENT AND TRADEMARK OFFICE

Commissioner for Patents
United States Patent and Trademark Office
P.O. Box 1450
Alexandria, VA 22313-1450
www.uspto.gov

Harshaw Research Incorporated
PO Box 418
Ottawa KS 66067

COPY MAILED

MAR 0 8 2006

OFFICE OF PETITIONS

In re Application of	:	
Cotten et al.	:	
Application No. 10/668,858	:	DECISION ON PETITION
Filed: September 23, 2003	:	
Attorney Docket No. 59825	:	

This is a decision on the petition under 37 CFR 1.181, filed November 4, 2005, to withdraw the holding of abandonment.

On February 2, 2005, the Office mailed a nonfinal Office action, which set a three-month shortened statutory period to respond. In the apparent absence of a timely filed response, the application became abandoned on May 3, 2005. This petition preceded the mailing of a Notice of Abandonment.

In the present petition, petitioners asserted that they filed a timely response to the nonfinal Office action via facsimile transmission on March 8, 2005. In support of their assertion, petitioners submitted a copy of an amendment, containing a certificate of facsimile transmission dated March 8, 2005, and signed by practitioner, Dale J. Ream. Additionally, petitioners submitted the affidavit of Mr. Ream, attesting on a personal knowledge basis to the previous timely transmission of the response on March 8, 2005.

Pursuant to 37 CFR 1.8:

> (b) In the event that correspondence is considered timely filed by being mailed or transmitted in accordance with paragraph (a) of this section, but not received in the U.S. Patent and Trademark Office after a reasonable amount of time has elapsed from the time of mailing or transmitting of the correspondence, or after the application is held to be abandoned or after the proceeding is dismissed, terminated, or decided with prejudice, the correspondence will be considered timely if the party who forwarded such correspondence:
>
> (1) Informs the Office of the previous mailing or transmission of the correspondence promptly after becoming aware that the Office has no evidence of receipt of the correspondence;

(2) Supplies an additional copy of the previously mailed or transmitted correspondence and certificate; and,

(3) Includes a statement which attests on a personal knowledge basis or to the satisfaction of the Director to the previous timely mailing or transmission. If the correspondence was sent by facsimile transmission, a copy of the sending unit's report confirming transmission may be used to support this statement.

(c) The Office may require additional evidence to determine if the correspondence was timely filed.

After reviewing the record and the papers submitted on petition, the response is considered timely filed on March 8, 2005. Accordingly, the petition is **granted**. The holding of abandonment is hereby withdrawn. The application is restored to pending status in view of the fact that a response was timely submitted on March 8, 2005.

The $130.00 fee is unnecessary and will be refunded to petitioners.

This matter is being referred to Technology Center Art Unit 3742.

Telephone inquiries concerning this matter may be directed to the undersigned at (571) 272-3211.

Christina Tartera Donnell

Christina Tartera Donnell
Senior Petitions Attorney
Office of Petitions

UNITED STATES PATENT AND TRADEMARK OFFICE

Commissioner for Patents
United States Patent and Trademark Office
P.O. Box 1450
Alexandria, VA 22313-1450
www.uspto.gov

David W. Highet
VP & Chief IP Counsel
Becton, Dickinson and Company
1 Becton Drive
MC 110
Franklin Lakes, NJ 07417-1880

COPY MAILED

NOV 0 4 2008

OFFICE OF PETITIONS

In re Application of	:	
Eric Schiller et al.	:	
Application No. 10/668,863	:	ON PETITION
Filed: September 23, 2003	:	
Attorney Docket No. P-6106	:	

This is a decision on the petition under the unintentional provisions of 37 CFR 1.137(b), filed October 14, 2008, to revive the above-identified application.

The petition is **GRANTED**.

The application became abandoned for failure to reply in a timely manner to the final Office action mailed, February 20, 2008, which set a shortened statutory period for reply of three (3) months. No extensions of time under the provisions of 37 CFR 1.136(a) were obtained. Accordingly, the application became abandoned on May 21, 2008.

The petition satisfies the requirements of 37 CFR 1.137(b) in that petitioner has supplied (1) the reply in the form of a Notice of Appeal, with the required fee of $540, (2) the petition fee of $1620, and (3) a proper statement of unintentional delay. Accordingly, the Notice of Appeal is accepted as being unintentionally delayed.

The two-month period for filing an appeal brief under 37 CFR 41.37 (accompanied by the fee required by 37 CFR 41.20(b)(2)), runs from the date of this decision.

It is not apparent whether the person signing the statement of unintentional delay was in a position to have firsthand or direct knowledge of the facts and circumstances of the delay at issue. Nevertheless, such statement is being treated as having been made as the result of a reasonable inquiry into the facts and circumstances of such delay. See 37 CFR 10.18(b) and

Changes to Patent Practice and Procedure; Final Rule Notice, 62 Fed. Reg. 53131, 53178 (October 10, 1997), 1203 Off. Gaz. Pat. Office 63, 103 (October 21, 1997). In the event that such an inquiry has not been made, petitioner must make such an inquiry. If such inquiry results in the discovery that it is not correct that the entire delay in filing the required reply from the due date for the reply until the filing of a grantable petition pursuant to 37 CFR 1.137(b) was unintentional, petitioner must notify the Office.

The application file does not indicate a change of address has been filed in this case, although the address given on the petition differs from the address of record. A change of address should be filed in this case in accordance with MPEP 601.03. A courtesy copy of this decision is being mailed to the address noted on the petition. However, until otherwise instructed, all future correspondence regarding this application will be mailed solely to the address of record.

Telephone inquiries concerning this decision should be directed to Kimberly Inabinet at (571) 272-4618.

This application is being referred to Technology Center AU 3767 for processing of the response and any action that is required by the Examiner in the normal course of business.

Carl Friedman
Petitions Examiner
Office of Petitions

cc: Scott C. Servilla
77 Brant Avenue, Suite 210
Clark, NJ 07066

UNITED STATES PATENT AND TRADEMARK OFFICE

COMMISSIONER FOR PATENTS
UNITED STATES PATENT AND TRADEMARK OFFICE
P.O. BOX 1450
ALEXANDRIA, VA 22313-1450
www.uspto.gov

WAGNER, MURABITO & HAO LLP
TWO NORTH MARKET STREET, THIRD FLOOR
SAN JOSE CA 95113

COPY MAILED

APR 1 9 2004

OFFICE OF PETITIONS

In re Application of
Anup Bhalla et al.
Application No. 10/668,866
Filed: September 22, 2003
Attorney Docket Number: VISH-819 . DIV

ON PETITION

This is a decision on the petition filed February 26, 2004, under 37 CFR 1.182 as a petition requesting that the above-identified application be amended to include Figures 8a, 8B and 23C as described in the specification.

The petition is **DISMISSED**.

The application was filed September 22, 2003. However, on December 22, 2003, the Office mailed a "Notice of Omitted Item(s) in a Nonprovisional Application" stating that the application had been accorded a filing date of September 22, 2003 but advised that Figures 8a, 8B and 23C described in the specification appeared to have been omitted.

In response, the present petition was filed on February 26, 2004, accompanied by two (2) sheets of drawings containing Figures 8a, 8B and 23C.

The mailing of a "Notice of Omitted Items" permits the applicant to either: (1) promptly establish prior receipt in the PTO of the drawing(s) at issue (generally by way of a date-stamped postcard receipt (MPEP 503)), or (2) promptly submit the omitted drawing(s) in a nonprovisional application and accept the date of such submission as the application filing date. An applicant asserting that the missing drawings were in fact deposited in the PTO with the application papers must file a petition (and the appropriate petition fee) with evidence of such deposit. An applicant desiring to submit the omitted drawings in a nonprovisional application and accept the date of such submission as the application filing date must file any omitted drawing(s) with an oath or declaration in compliance with 37 CFR 1.63 and 1.64 referring to such drawing(s) and a petition under 37 CFR 1.182 (with the petition fee under 37 CFR 1.17(h)) requesting the later filing date within two months of the date of the "Notice of Omitted Items" (37 CFR 1.181(f)).

In this case, petitioners neither assert that the missing Figures were deposited on November 21, 2003, nor request the February 26, 2004, (the date the missing Figure was supplied) filing date. Rather, petitioners seek to amend the drawings by filing a sheet containing new drawings of Figures 8a, 8B and 23C. Amendments to the specification may be entered by the primary examiner without petition so long as the amendment contains no new matter.[1]

Accordingly, the petition is inappropriate and is subject to dismissal.

The application will be processed and examined using only the application papers present on the filing date of November 21, 2003. The two (2) sheets of drawings supplied with the present petition will not be processed or examined, but will be retained in the application file.

[1] 37 CFR 1.121(b).

A preliminary amendment adding the sheet containing new drawings of Figures 8a, 8B and 23C should be filed prior to the first Office action on the merits.

The application is being returned to the Office of Initial Patent Examination for further processing with a filing date of November 21, 2003, using the application papers filed on that date.

Telephone inquiries related to this matter should be directed to the undersigned Petitions Attorney at 703-305-4497.

Patricia Faison-Ball

Patricia Faison-Ball
Senior Petitions Attorney
Office of Petitions

UNITED STATES PATENT AND TRADEMARK OFFICE

Commissioner for Patents
United States Patent and Trademark Office
P.O. Box 1450
Alexandria, VA 22313-1450
www.uspto.gov

MARSHALL GERSTEIN & BORUN LLP
6300 SEARS TOWER
233 S WACKER DRIVE
CHICAGO IL 60606

COPY MAILED
JUN 0 8 2004
OFFICE OF PETITIONS

In re Application of	:	
Kenneth Lathrop, Stephen	:	
Penrice	:	DECISION REFUSING
Application No. 10/668,891	:	STATUS UNDER § 1.47(a)
Filing Date: September 23, 2003	:	
Attorney Docket No. 20339.14	:	

This is in response to the "PETITION FOR FILING ON BEHALF OF A NON-SIGNING INVENTOR UNDER 37 CFR §1.47(a)," filed April 19, 2004.

The petition under 37 CFR 1.47(a) is **DISMISSED**.

Rule 47 applicant is given TWO MONTHS from the mailing date of this decision to reply, correcting the below-noted deficiencies. Any reply should be entitled "Request for Reconsideration of Petition Under 37 CFR 1.47(a)," and should only address the deficiencies noted below, except that the reply may include an oath or declaration executed by the non-signing inventors. **Failure to respond will result in abandonment of the application.** Any extensions of time will be governed by 37 CFR 1.136(a).

The above-identified application was filed on September 23, 2003, without an executed oath or declaration. Accordingly, a Notice to File Missing Parts of Nonprovisional Application was mailed on

December 16, 2003. This Notice set an extendable period for reply of two months. On April 19, 2004, applicants filed the instant petition, made timely by obtaining a two month extension of time and including a Certificate of Mailing dated April 14, 2004.

A grantable petition under 37 CFR 1.47(a) requires: (1) proof that the non-signing inventor(s) cannot be reached or refuses to sign the oath or declaration after having been presented with the application papers (specification, claims and drawings); (2) an acceptable oath or declaration in compliance with 37 CFR 1.63; (3) the petition fee; and (4) a statement of the last known address of the non-signing inventor(s). The instant petition does not satisfy requirement (2).

As to requirement (2), petitioner has failed to submit an oath or declaration in compliance with 37 CFR 1.63. The declaration is not acceptable because it does not contain the residence and post office address of the non-signing inventor.

On renewed petition, applicants must submit a declaration in compliance with 37 CFR 1.63.

The person signing the instant petition requests a change of correspondence address to the address given in the instant petition. There is, however, no indication that the person signing the instant petition was ever given a power of attorney or authorization of agent to prosecute the above-identified application. If the person signing the instant petition desires to receive future correspondence regarding this application, the appropriate power of attorney or authorization of agent must be submitted. While a courtesy copy of this decision is being mailed to the person signing the instant petition, all future correspondence will be directed to the address currently of record until such time as appropriate instructions are received to the contrary. The change of correspondence address and power of attorney will be entered at such time as the person signing the instant petition files a grantable petition under 37 CFR 1.47(a).

Further correspondence with respect to this matter should be addressed as follows:

By mail: Mail Stop Petitions
Commissioner for Patents
P.O. Box 1450
Alexandria VA 22313-1450

By FAX: (703) 872-9306
Attn: Office of Petitions

Telephone inquiries concerning this decision may be directed to the undersigned at (703) 305-0272.

Cliff Congo

Cliff Congo
Petitions Attorney
Office of Petitions

cc: Arnall Golden Gregory LLP
1201 West Peachtree Street
Suite 2800
Atlanta GA 30309-3450

UNITED STATES PATENT AND TRADEMARK OFFICE

Commissioner for Patents
United States Patent and Trademark Office
P.O. Box 1450
Alexandria, VA 22313-1450
www.uspto.gov

BRYAN W BOCKHOP ESQ
ARNALL GOLDEN GREGORY LLP
1201 WEST PEACHTREE ST
SUITE 2600
ATLANTA GA 30309

COPY MAILED

JUL 06 2004

OFFICE OF PETITIONS

In re Application of Kenneth Lathrop, Stephen Penrice Application No. 10/668,891 Filing Date: September 23, 2003 Attorney Docket No. 20339.14	:	DECISION ACCORDING STATUS UNDER § 1.47(a)

This is in response to the "REQUEST FOR RECONSIDERATION OF PETITION UNDER 37 CFR 1.47(a)," filed June 17, 2004.

The renewed petition under 37 CFR 1.47(a) is **GRANTED**.

The above-identified application was filed on September 23, 2003, without an executed oath or declaration. Accordingly, a Notice to File Missing Parts of Nonprovisional Application was mailed on December 16, 2003. This Notice set an extendable period for reply of two months. On April 19, 2004, applicants filed a petition under 37 CFR 1.47(a), made timely by obtaining a two month extension of time and including a Certificate of Mailing dated April 14, 2004. However, the petition was dismissed in a decision mailed on June 8, 2004, because applicants did not submit a declaration in compliance with 37 CFR 1.63. The declaration was not acceptable because it did not contain the residence and post office address of the nonsigning inventor.

A grantable petition under 37 CFR 1.47(a) requires: (1) proof that the non-signing inventor(s) cannot be reached or refuses to sign the oath or declaration after having been presented with the application papers (specification, claims and drawings); (2) an

acceptable oath or declaration in compliance with 37 CFR 1.63; (3) the petition fee; and (4) a statement of the last known address of the non-signing inventor(s).

On renewed petition, applicants have submitted a declaration in compliance with 37 CFR 1.63.

In view thereof, Rule 47 applicant has submitted a declaration in compliance with 37 CFR 1.63 and satisfied the requirements of 37 CFR 1.47(a). Accordingly, the above-identified application is hereby accorded Rule 1.47(a) status.

Pursuant to 37 CFR 1.47(c), this Office will forward notice of this application's filing to the non-signing inventor at the last known address given in the petition. Notice of the filing of this application will also be published in the Official Gazette.

The application file is being forwarded to Group Art Unit 3711 for docketing.

Telephone inquiries concerning this decision may be directed to the undersigned at (703) 305-0272.

Cliff Congo

Cliff Congo
Petitions Attorney
Office of Petitions

SPE RESPONSE FOR CERTIFICATE OF CORRECTION

Paper No.: _____

DATE : 8-8-08

TO SPE OF : ART UNIT 3714

SUBJECT : Request for Certificate of Correction for Appl. No.: 10/688891 Patent No.: 7186180

Please respond to this request for a certificate of correction within 7 days.

Please review the requested changes/corrections as shown in the **COCIN** document(s) in the IFW application image. No new matter should be introduced, nor should the scope or meaning of the claims be changed.

Please check Drawings

Please complete the response (see below) and forward the completed response to scanning using document code **COCX**.

E Young

Certificates of Correction Branch

703-308-9390 ext. 117

Thank You For Your Assistance

The request for issuing the above-identified correction(s) is hereby:

Note your decision on the appropriate box.

- [X] **Approved** — All changes apply.
- [ ] **Approved in Part** — Specify below which changes **do not** apply.
- [ ] **Denied** — State the reasons for denial below.

Comments: _____

SPE

3719

Art Unit

ROBERT E. PEZZUTO

SUPERVISORY PRIMARY EXAMINER

UNITED STATES PATENT AND TRADEMARK OFFICE

Commissioner for Patents
United States Patent and Trademark Office
P.O. Box 1450
Alexandria, VA 22313-1450
www.uspto.gov

Michael Best & Friedrich, LLP
Two Prudential Plaza
180 North Stetson Avenue
Suite 2000
Chicago, IL 60601

COPY MAILED

JUL 09 2008

OFFICE OF PETITIONS

In re Application of	:	
Raoul G. Fima	:	
Application No. 10/668,897	:	DECISION ON PETITION
Filed: September 23, 2003	:	TO WITHDRAW
Attorney Docket No. 034584-9003	:	FROM RECORD

This is a decision on the Request to Withdraw as attorney or agent of record under 37 C.F.R. § 1.36(b), filed June 6, 2008.

The request is **NOT APPROVED** as moot.

A review of the file record indicates that the power of attorney to Carlo M. Cotrone and all attorneys/agents associated with customer number 01131 has been revoked by the applicant of the patent application on June 25, 2008. Accordingly, the request to withdraw under 37 C.F.R. § 1.36(b) is moot.

All future communications from the Office will continue to be directed to the below-listed address until otherwise notified by applicant.

Telephone inquires concerning this decision should be directed to Kimberly Inabinet at 571-272- 4618.

Kimberly Inabinet
Petitions Examiner
Office of Petitions

cc: William B. Noll
402 Anemone Street
Panama City Beach, FL 32413

UNITED STATES PATENT AND TRADEMARK OFFICE

UNITED STATES DEPARTMENT OF COMMERCE
United States Patent and Trademark Office
Address: COMMISSIONER FOR PATENTS
P.O. Box 1450
Alexandria, Virginia 22313-1450
www.uspto.gov

APPLICATION NUMBER	FILING OR 371(C) DATE	FIRST NAMED APPLICANT	ATTY. DOCKET NO./TITLE
10/668,897	09/23/2003	Raoul G. Fima	034584-9003

CONFIRMATION NO. 2495

POWER OF ATTORNEY NOTICE

1131
MICHAEL BEST & FRIEDRICH LLP
Two Prudential Plaza
180 North Stetson Avenue, Suite 2000
CHICAGO, IL 60601

OC000000030854940

Date Mailed: 07/08/2008

NOTICE REGARDING CHANGE OF POWER OF ATTORNEY

This is in response to the Power of Attorney filed 06/25/2008.

- The Power of Attorney to you in this application has been revoked by the applicant. Future correspondence will be mailed to the new address of record(37 CFR 1.33).

/kainabinet/

Office of Data Management, Application Assistance Unit (571) 272-4000, or (571) 272-4200, or 1-888-786-0101

UNITED STATES PATENT AND TRADEMARK OFFICE

Commissioner for Patents
United States Patent and Trademark Office
P.O. Box 1450
Alexandria, VA 22313-1450
www.uspto.gov

RUTAN & TUCKER, LLP
611 ANTON BLVD., SUITE 1400
COSTA MESA, CA 92626

COPY MAILED

OCT 2 1 2008

OFFICE OF PETITIONS

In re Application of	:	
Dusan MILJKOVIC, et al	:	
Application No. 10/668,921	:	DECISION ON PETITION
Filed: September 22, 2003	:	TO WITHDRAW
Attorney Docket No. 100700.0011US2	:	FROM RECORD
	:	

This is a decision on the Request to Withdraw as attorney or agent of record under 37 C.F.R. § 1.36(b), filed September 16, 2008.

The request is **NOT APPROVED** as moot.

A review of the file record indicates that the power of attorney to Rutan & Tucker, LLP has been revoked by the assignee of the patent application on September 23, 2008. Accordingly, the request to withdraw under 37 C.F.R. § 1.36(b) is moot.

The correspondence address of record has been changed and the new correspondence address is the address indicated below.

Telephone inquires concerning this decision should be directed to undersigned at 571-272- 6735.

Diane Goodwyn
Petitions Examiner
Office of Petitions

cc: ROBERT FISH
FISH & ASSOCIATES, PC
2603 MAIN STREET, SUITE 1050
IRVINE, CA 92614

UNITED STATES PATENT AND TRADEMARK OFFICE

Commissioner for Patents
United States Patent and Trademark Office
P.O. Box 1450
Alexandria, VA 22313-1450
www.uspto.gov

DONALD F. HAAS
SHELL OIL COMPANY
LEGAL – INTELLECTUAL PROPERTY
P.O. BOX 2463
HOUSTON, TX 77252-2463

COPY MAILED

APR 0 7 2005

OFFICE OF PETITIONS

In re Application of	:	
Van Zon et al.	:	
Application No. 10/668,933	:	ON PETITION
Filed: September 23, 2003	:	
Attorney Docket No. TS1260 02 (US)	:	

This is a decision on the petition under 37 CFR § 1.78(a)(6), filed October 28, 2004, to accept an unintentionally delayed claim under 35 U.S.C. § 119(e) for the benefit of prior-filed provisional Application No. 60/413,278, filed September 25, 2002, as set forth in the concurrently filed amendment.

The petition is **DISMISSED AS MOOT**.

A petition under 37 CFR § 1.78(a)(6) is only applicable to those applications filed on or after November 29, 2000.

Along with the instant petition under 37 CFR § 1.78(a)(6), petitioner has submitted an amendment to the first sentence of the specification following the title to include a reference to the above-noted, prior-filed provisional application.

The instant pending nonprovisional application was filed on September 23, 2003, and was pending at the time of filing of the instant petition. While a reference to the above-noted, prior-filed provisional application was not included in an ADS or in the first sentence of the specification following the title, reference nevertheless was made in the transmittal letter and the declaration filed with the above-identified application.

The current procedure where a claim for priority under 37 CFR § 1.78(a)(6) is not included in the first sentence of the specification or in an ADS but does appear either in the oath or declaration or a transmittal letter filed with the application and the Office notes the claim for priority, no petition will be required to accept a late claim for priority. This is because the

application would have been scheduled for publication on the basis of the information concerning the claim submitted elsewhere in the application within the time period set forth in 37 CFR § 1.78(a)(5)(ii). However, on the other hand, if the USPTO does not note the claim for priority to the prior-filed application(s) set forth in the oath or declaration or transmittal letter submitted with the application, a petition will be required to accept a late claim for priority under 37 CFR § 1.78(a)(6).[1] In the instant case, the Office noted the claim for priority of the above-noted, prior-filed provisional application in the transmittal letter filed with the application, as shown by its inclusion on the filing receipt.

In view of the above, the $130.00 petition fee submitted is unnecessary and will be refunded to petitioner's deposit account in due course.

Any questions concerning this decision on petition may be directed to Paralegal Liana Chase at (571) 272-3206. All other inquiries concerning either the examination procedures or status of the application should be directed to the Technology Center.

This matter is being referred to the Examiner of Technology Center AU 1764 for appropriate action on the amendment filed October 28, 2004, including consideration of the claim under 35 U.S.C. § 119(e) and 37 CFR 1.78(a)(5) for benefit of the prior-filed provisional application.

Frances Hicks

Frances Hicks
Petitions Examiner
Office of Petitions
Office of the Deputy Commissioner
for Patent Examination Policy

[1] *Note* MPEP 201.11 (V), page 200-75 (Rev. 1. Feb. 2004) and 66 Federal Register 67087 at 67089 (Dec. 28, 2001), effective December 28, 2001.

UNITED STATES PATENT AND TRADEMARK OFFICE

Commissioner for Patents
United States Patent and Trademark Office
P.O. Box 1450
Alexandria, VA 22313-1450
www.uspto.go

DONALD F. HAAS
SHELL OIL COMPANY
LEGAL – INTELLECTUAL PROPERTY
P.O. BOX 2463
HOUSTON, TX 77252-2463

COPY MAILED

JAN 27 2005

OFFICE OF PETITIONS

In re Application of :
Van Zon et al. :
Application No. 10/668,934 : ON PETITION
Filed: September 23, 2003 :
Attorney Docket No. TS1260 :

This is a decision on the petition under 37 CFR §§ 1.78(a)(6), filed October 21, 2004, to accept an unintentionally delayed claim under 35 U.S.C. §§ 119(e) for the benefit of prior-filed provisional Application No. 60/413,276, filed September 25, 2002, as set forth in the concurrently filed amendment.

The petition is **DISMISSED AS MOOT**.

A petition under 37 CFR §§ 1.78(a)(6) is only applicable to those applications filed on or after November 29, 2000.

Along with the instant petition under 37 CFR §§ 1.78(a)(6), petitioner has submitted an amendment to the first sentence of the specification following the title to include a reference to the above-noted, prior-filed provisional application.

The instant pending nonprovisional application was filed on September 23, 2003, and was pending at the time of filing of the instant petition. While a reference to the above-noted, prior-filed provisional application was not included in an ADS or in the first sentence of the specification following the title, reference nevertheless was made in the transmittal letter and the declaration filed with the above-identified application.

The current procedure where a claim for priority under 37 CFR §§ 1.78(a)(6) is not included in the first sentence of the specification or in an ADS but does appear either in the oath or declaration or a transmittal letter filed with the application and the Office notes the claim for priority, no petition will be required to accept a late claim for priority. This is because the application would have been scheduled for publication on the basis of the information concerning the claim submitted elsewhere in the

application within the time period set forth in 37 CFR §§ 1.78(a)(5)(ii). However, on the other hand, if the USPTO does not note the claim for priority to the prior-filed application(s) set forth in the oath or declaration or transmittal letter submitted with the application, a petition will be required to accept a late claim for priority under 37 CFR §§ 1.78(a)(6).[1] In the instant case, the Office noted the claim for priority of the above-noted, prior-filed provisional application in the transmittal letter filed with the application, as shown by its inclusion on the filing receipt.

In view of the above, the $130.00 petition fee submitted is unnecessary and will be refunded to petitioner's deposit account in due course.

Any questions concerning this decision on petition may be directed to Paralegal Liana Chase at (571) 272-3206. All other inquiries concerning either the examination procedures or status of the application should be directed to the Technology Center.

This matter is being referred to the Examiner of Technology Center AU 1764 for appropriate action on the amendment filed October 21, 2004, including consideration of the claim under 35 U.S.C. § 119(e) and 37 CFR 1.78(a)(5) for benefit of the prior-filed provisional application.

Frances Hicks

Frances Hicks
Petitions Examiner
Office of Petitions
Office of the Deputy Commissioner
for Patent Examination Policy

[1] *Note* MPEP 201.11 (V), page 200-75 (Rev. 1. Feb. 2004 and 66 Federal Register 67087 at 67089 (Dec. 28, 2001), effective December 28, 2001.

UNITED STATES PATENT AND TRADEMARK OFFICE

Commissioner for Patents
United States Patent and Trademark Office
P.O. Box 1450
Alexandria, VA 22313-1450
www.uspto.gov

CHIEF PATENT COUNSEL
UNITED STATES SURGICAL,
A DIVISION OF TYCO HEALTHCARE GROUP LP
150 GLOVER AVENUE
NORWALK CT 06856

COPY MAILED
AUG 0 3 2004
OFFICE OF PETITIONS

In re Application of	:
David T. Green et al	:
Application No. 10/668,941	: DECISION ON PETITION
Filed: September 22, 2003	: UNDER 37 CFR 1.78(a)(3)
Attorney Docket No. 1252CIP3DIVCON6	:

This is a decision on the petition under 37 CFR 1.78(a)(3), filed June 21, 2004, to accept an unintentionally delayed claim under 35 U.S.C. § 120 for the benefit of priority to the prior-filed nonprovisional applications set forth in the amendment filed concurrently with the instant petition.

The petition is **DISMISSED**.

A petition for acceptance of a claim for late priority under 37 CFR 1.78(a)(3) is only applicable to those applications filed on or after November 29, 2000. Further, the petition is appropriate only after the expiration of the period specified in 37 CFR 1.78(a)(2)(ii). In addition, the petition under 37 CFR 1.78(a)(3) must be accompanied by:

(1) the reference required by 35 U.S.C. § 120 and 37 CFR 1.78(a)(2)(i) of the prior-filed application(s), unless previously submitted;

(2) the surcharge set forth in § 1.17(t); and

(3) a statement that the entire delay between the date the claim was due under 37 CFR 1.78(a)(2)(ii) and the date the claim was filed was unintentional. The Commissioner may require additional information where there is a question whether the delay was unintentional.

The instant petition does not comply with item (1) above.

A reference to add the above-noted, prior-filed applications on page one following the first sentence of the specification has been included in a concurrently filed amendment. However, the amendment is not acceptable as drafted since it improperly incorporates by reference the prior-filed applications Petitioner's attention is directed to Dart Industries v. Banner, 636 F.2d 684, 207 USPQ 273 (C.A.D.C. 1980), where the court drew a distinction between a permissible 35 U.S.C. § 120 statement and the impermissible introduction of new matter by way of incorporation by reference in a 35 U.S.C. § 120 statement. The court specifically stated:

> Section 120 merely provides a mechanism whereby an application becomes entitled to benefit of the filing date of an earlier application disclosing the same subject matter. Common subject matter must be disclosed, in both applications, either specifically or by an express incorporation-by-reference of prior disclosed subject matter. Nothing in section 120 itself operates to carry forward any disclosure from an earlier application. In re deSeversky, supra at 674, 177 USPQ at 146-147. Section 120 contains no magical disclosure-augmenting powers able to pierce new matter barriers. It cannot, therefore, "limit" the absolute and express prohibition against new matter contained in section 251.

In order for the incorporation by reference statement to be effective as a proper safeguard against the omission of a portion of a prior application, the incorporation by reference statement must be included in the specification-as-filed, or in an amendment specifically referred to in an oath or declaration executing the application. *See* In re deSeversky, *supra*. *Note also* MPEP 201.06(c).

Accordingly, before the petition under 37 CFR 1.78(a)(3) can be granted, a substitute amendment[1] deleting the incorporation by reference statement for Application No. 09/852,457, and Application No. 09/487,111, along with a renewed petition under 37 CFR 1.78(a)(3), is required.

Further correspondence with respect to this matter should be addressed as follows:

By mail: Mail Stop PETITIONS
Commissioner for Patents
Post Office Box 1450
Alexandria, VA 22313-1450

---

[1] *Note* 37 CFR 1.121

By hand: Customer Window located at:

2011 South Clark Place
Crystal Plaza Two Lobby
Room 1B03
Arlington, VA 22202

By fax: (703) 872-9306
ATTN: Office of Petitions

Telephone inquiries concerning this decision should be directed to the undersigned at (703) 305-8859.

Karen Creasy

Karen Creasy
Petitions Examiner
Office of Petitions
Office of the Deputy Commissioner
for Patent Examination Policy

UNITED STATES PATENT AND TRADEMARK OFFICE

Commissioner for Patents
United States Patent and Trademark Office
P.O. Box 1450
Alexandria, VA 22313-1450
www.uspto.gov

CHIEF PATENT COUNSEL
UNITED STATES SURGICAL,
A DIVISIONOF TYCO HEALTHCARE GROUP IP
150 GLOVER AVENUE
NORWALK, CT 06856

COPY MAILED

DEC 07 2004

OFFICE OF PETITIONS

In re Application of	:
David T. Green et al	:
Application No. 10/668,941	: DECISION ON PETITION
Filed: September 22, 2003	: UNDER 37 CFR 1.78(a)(3)
Attorney Docket No. 1252CIP3DIVCON6(203-833)	:

This is a decision on the renewed petition under 37 CFR 1.78(a)(3), filed September 13, 2004, to accept an unintentionally delayed claim under 35 U.S.C. § 120 for the benefit of priority to prior-filed nonprovisional Application No. 09/487,111, filed January 19, 2000, set forth in the amendment filed concurrently with the instant petition.

The petition is **GRANTED**.

A petition for acceptance of a claim for late priority under 37 CFR 1.78(a)(3) is only applicable to those applications filed on or after November 29, 2000. Further, the petition is appropriate only after the expiration of the period specified in 37 CFR 1.78(a)(2)(ii). In addition, the petition under 37 CFR 1.78(a)(3) must be accompanied by:

> **(1)** the reference required by 35 U.S.C. § 120 and 37 CFR 1.78(a)(2)(i) of the prior-filed application, unless previously submitted;[1]
> **(2)** the surcharge set forth in § 1.17(t); and
> **(3)** a statement that the entire delay between the date the claim was due under 37 CFR 1.78(a)(2)(ii) and the date the claim was filed was unintentional. The Commissioner may require additional information where there is a question whether the delay was unintentional.

---

[1] Any nonprovisional application or international application designating the United States of America claiming the benefit of one or more prior-filed copending applications or international applications designating the United States of America must contain or be amended to contain a reference (amendment to the first line of the specification following the title or in an application data sheet (ADS) to each such prior-filed application, identifying it by application number (consisting of the series code and serial number) or international application number and international filing date filing date and indicating the relationship of the applications. Cross references to other related applications may be made when appropriate (*see* § 1.14).

The instant pending application was filed on September 22, 2003, and was pending at the time of filing of the instant petition. A reference to the prior-filed nonprovisional application has been included in an amendment to the first sentence of the specification following the title, as required by 37 CFR 1.78(a)(2)(iii).

The instant nonprovisional application was filed after November 29, 2000, and the claim herein for the benefit of priority to the prior-filed nonprovisional application is submitted after expiration of the period specified in 37 CFR 1.78(a)(2)(ii). Also, the reference to the prior-filed nonprovisional application was submitted during the pendency of the instant nonprovisional application, for which the claim for benefit of priority is sought. *See* 35 U.S.C. § 120. Accordingly, having found that the instant petition for acceptance of an unintentionally delayed claim for the benefit of priority under 35 U.S.C. § 120 to the prior-filed nonprovisional application satisfies the conditions of 37 CFR 1.78(a)(3), the petition is granted.

The granting of the petition to accept the delayed benefit claim to the prior-filed application under 37 CFR 1.78(a)(3) should not be construed as meaning that the instant application is entitled to the benefit of the prior-filed application. In order for the instant application to be entitled to the benefit of the prior-filed application, all other requirements under 35 U.S.C. § 120 and 37 CFR 1.78(a)(1) and (a)(2) must be met. Similarly, the fact that the corrected Filing Receipt accompanying this decision on petition includes the prior-filed application should not be construed as meaning that applicant is entitled to the claim for benefit of priority to the prior-filed application noted thereon. Accordingly, the examiner will, in due course, consider this benefit claim and determine whether the instant application is entitled to the benefit of the earlier filing date.

A corrected Filing Receipt, which includes the priority claim to the prior-filed nonprovisional application, accompanies this decision on petition.

Any inquiries concerning this decision may be directed to Karen Creasy at (571) 272-3208.

The examiner of Technology Center Art Unit 3721 will consider applicant's entitlement to claim benefit of priority under 35 U.S.C. § 120 to the prior-filed nonprovisional application.

Karen Creasy

Karen Creasy
Petitions Examiner
Office of Petitions
Office of the Deputy Commissioner
for Patent Examination Policy

ATTACHMENT: Corrected Filing Receipt

UNITED STATES PATENT AND TRADEMARK OFFICE

Commissioner for Patents
United States Patent and Trademark Office
P.O. Box 1450
Alexandria, VA 22313-1450
www.uspto.gov

DAVID M. CARTER
CARTER, DELUCA, FARRELL & SCHMIDT
445 BROADHOLLOW ROAD
MELVILLE, NY 11747

COPY MAILED

APR 22 2005

OFFICE OF PETITIONS

In re Application of
William M. Bouverie et al
Application No. 10/668,943
Filed: September 22, 2003
Attorney Docket No. 772-37

: DECISION ON PETITIONS
: UNDER 37 CFR 1.78(a)(3) AND
: UNDER 37 CFR 1.78(a)(6)

This is a decision on the petitions under 37 CFR §§ 1.78(a)(3) and 1.78(a)(6), filed February 28, 2005, to accept an unintentionally delayed claim under 35 U.S.C. §§120, and 119(e) for the benefit of the prior-filed applications set forth in the concurrently filed amendment.

The petitions are **Granted**.

A petition for acceptance of a claim for late priority under 37 CFR §§ 1.78(a)(3) and 1.78(a)(6) is only applicable to those applications filed on or after November 29, 2000. Further, the petition is appropriate only after the expiration of the period specified in 37 CFR §§ 1.78(a)(2)(ii) and 1.78(a)(5)(ii). In addition, the petition under 37 CFR §§ 1.78(a)(3) and 1.78(a)(6) must be accompanied by:

(1) the reference required by 35 U.S.C. §§ 120 and 119(e) and 37 CFR §§ 1.78(a)(2)(i) and 1.78(a)(5)(i) of the prior-filed application, unless previously submitted;
(2) the surcharge set forth in § 1.17(t); and
(3) a statement that the entire delay between the date the claim was due under 37 CFR §§ 1.78(a)(2)(ii) and 1.78(a)(5)(ii) and the date the claim was filed was unintentional. The Commissioner may require additional where there is a question whether the delay was unintentional.

The instant nonprovisional application was filed after November 29, 2000, and the claim herein for the benefit of priority to the prior-filed applications is submitted after expiration of the period specified in 37 CFR §§ 1.78(a)(2)(ii) and 1.78(a)(5)(ii). Therefore, this is a proper petition under 37 CFR §§ 1.78(a)(3) and 1.78(a)(6).

The instant nonprovisional application was pending at the time of filing of the reference to the prior-filed provisional application as required by 37 CFR 1.78(a)(5)(ii). Additionally, intermediate PCT Application No. PCT/US00/08051, was filed within twelve months of the filing date of the prior-filed provisional application, Application No. 60/126,499, which was filed on March 26, 1999, for which priority is claimed.

The petition complies with the requirements for a grantable petition under 37 CFR §§1.78(a)(3) and 1.78(a)(6) in that (1) a reference to the above-noted, prior-filed nonprovisional applications has been included in an amendment to the first sentence of the specification following the title , as provided by 37 CFR §§ 1.78(a)(2)(iii) and 1.78(a)(5)(iii); (2) the surcharge fee required by 37 CFR 1.17(t) has been submitted; and (3) the petition contains a proper statement of unintentional delay. Accordingly, having found that the instant petition for acceptance of an unintentionally delayed claim for the benefit of priority under 35 U.S.C. §§ 120 and 119(e) to the above-noted, prior-filed nonprovisional applications satisfies the conditions of 37 CFR §§ 1.78(a)(3) and 1.78(a)(6), the petition is granted.

The granting of the petition to accept the delayed benefit claim to the prior-filed applications under 37 CFR §§ 1.78(a)(3) and 1.78(a)(6) should <u>not</u> be construed as meaning that the instant application is entitled to the benefit of the filing date of the prior-filed applications. In order for the instant application to be entitled to the benefit of the prior-filed applications, all other requirements under 35 U.S.C. §§120 and 1.78(a)(1) and (a)(2) and under 35 U.S.C. §119(e) and 37 CFR 1.78(a)(4) and (a)(5) must be met. Similarly, the fact that the corrected Filing Receipt accompanying this decision on petition includes the prior-filed applications should <u>not</u> be construed as meaning that applicant is entitled to the claim for benefit of priority to the prior-filed applications noted thereon. Accordingly, the examiner will, in due course, consider this benefit claim and determine whether the instant application is entitled to the benefit of the earlier filing date.

A corrected Filing Receipt, which includes the priority claim to the prior-filed applications, accompanies this decision on petition.

Any questions concerning this matter may be directed to the undersigned at (571) 272-3208. All other inquiries concerning either the examination procedures or status of the application should be directed to the Technology Center.

This application is being referred to Technology Center Art Unit 2861 for appropriate action on the amendment submitted February 28, 2005, including consideration by the examiner of the claim under 35 U.S.C. § §120 and 37 CFR 1.78(a)(2) for the benefit of the prior-filed

applications, and for consideration of the claim under 35 U.S.C. §119(e) and 37 CFR 1.78(a)(5) for the benefit of the prior-filed provisional application.

Karen Creasy

Karen Creasy
Petitions Examiner
Office of Petitions
Office of the Deputy Commissioner
for Patent Examination Policy

ATTACHMENT : Corrected Filing Receipt

UNITED STATES PATENT AND TRADEMARK OFFICE

Commissioner for Patents
United States Patent and Trademark Office
P.O. Box 1450
Alexandria, VA 22313-1450
www.uspto.gov

OBLON SPIVAK MCCLELLAND
MAIER & NEUSTADT, P.C.
1940 DUKE STREET
ALEXANDRIA, VA 22314

COPY MAILED

JUL 1 3 2005

OFFICE OF PETITIONS

ON PETITION

In re Application of :
Ohishi Hiroto :
Application No. 10/668,957 :
Filed: September 24, 2003 :
Attorney Docket No. 242208US2 :

This is a decision on the petition under 37 CFR 1.313 (c)(2), filed July 12, 2005, to withdraw the above-identified application from issue after payment of the issue fee.

The petition is **GRANTED**.

The above-identified application is withdrawn from issue for consideration of a submission under 37 CFR 1.114 (request for continued examination). See 37 CFR 1.313(c)(2).

Petitioner is advised that the issue fee paid on June 21, 2005 in the above-identified application cannot be refunded. If, however, the above-identified application is again allowed, petitioner may request that it be applied towards the issue fee required by the new Notice of Allowance.[1]

Telephone inquiries should be directed to Wan Laymon at (571) 272-3220.

This matter is being referred to Technology Center AU 2852 for processing of the request for continued examination under 37 CFR 1.114 and for consideration of the concurrently filed Amendment and IDS.

Wan Laymon
Wan Laymon
Petitions Examiner
Office of Petitions
Office of the Deputy Commissioner
for Patent Examination Policy

---

[1] The request to apply the issue fee to the new Notice may be satisfied by completing and returning the new Issue Fee Transmittal Form PTOL-85(b), which includes the following language thereon: "Commissioner for Patents is requested to apply the Issue Fee and Publication Fee (if any) or re-apply any previously paid issue fee to the application identified above." Petitioner is advised that, whether a fee is indicated as being due or not, the Issue Fee Transmittal Form **must** be completed and timely submitted to avoid abandonment. Note the language in bold text on the first page of the Notice of Allowance and Fee(s) Due (PTOL-85).

UNITED STATES PATENT AND TRADEMARK OFFICE

UNITED STATES DEPARTMENT OF COMMERCE
United States Patent and Trademark Office
Address: COMMISSIONER FOR PATENTS
P.O. Box 1450
Alexandria, Virginia 22313-1450
www.uspto.gov

APPLICATION NO.	FILING DATE	FIRST NAMED INVENTOR	ATTORNEY DOCKET NO.	CONFIRMATION NO.
10/668,964	09/24/2003	Yukihiko Minamida	031206	1481

23850 7590 05/22/2008
KRATZ, QUINTOS & HANSON, LLP
1420 K Street, N.W.
Suite 400
WASHINGTON, DC 20005

EXAMINER
SERGENT, RABON A

ART UNIT	PAPER NUMBER
1796	

MAIL DATE	DELIVERY MODE
05/22/2008	PAPER

Please find below and/or attached an Office communication concerning this application or proceeding.

The time period for reply, if any, is set in the attached communication.

UNITED STATES PATENT AND TRADEMARK OFFICE

Commissioner for Patents
United States Patent and Trademark Office
P.O. Box 1450
Alexandria, VA 22313-1450
www.uspto.gov

wk

Mailed: 5-22-08

In re application of	:	
Yukihiko et al.	:	DECISION ON
Serial No. 10/668,964	:	PETITION
Filed: September 24, 2003	:	
For: Solvent-Free Moisture-Curable Hot Melt Urethane Resin Composition	:	

This is a response to a petition filed under 37 CFR 1.182 on March 1, 2007. The petition is being treated as a request under 37 CFR 1.181 to restart the office communication dated November 8, 2006.

DECISION

A review of the file shows that applicant has responded to the Office Communication dated November 8, 2006. Applicant request that extension-of-time fees be waived and that for purposes of patent term extension the Office action be considered to have been remailed. A refund may be given for any fee paid by mistake or in excess of that required. There was no mistake for the fees paid by the applicant.

Accordingly, the instant petition is **DISMISSED.**

Jacqueline M. Stone

Jacqueline M. Stone, Director
Technology Center 1700
Chemical and Materials Engineering

Daniel A. Geselowitz, Ph.D.
KRATZ, QUINTOS & HANSON, LLP
1420 K Street, N.W.
Suite 400
WASHINGTON DC 20005

UNITED STATES PATENT AND TRADEMARK OFFICE

Commissioner for Patents
United States Patent and Trademark Office
P.O. Box 1450
Alexandria, VA 22313-1450
www.uspto.gov

SIEMENS SCHWEIZ AG
I-47, INTELLECTUAL PROPERTY
ALBISRIEDERSTRASSE 245
ZURICH CH-80-47 CH SWITZERLAND

COPY MAILED

JUL 27 2006

OFFICE OF PETITIONS

In re Application of :
Rosenbaum, et al. :
Application No. 10/668,970 : ON PETITION
Filed: September 24, 2003 :
Attorney Docket No. 2001P05313WOUS :
For: METHOD FOR FRANKING AND PROCESSING DELIVERIES

This is a decision on the petition under 37 CFR 1.137(b), filed June 12, 2006, to revive the above-identified application.

The petition under 37 CFR 1.137(b) is **GRANTED**.

This application became abandoned for failure to timely reply to the Restriction Requirement, mailed April 6, 2005, which set a one month shortened statutory period for reply. No extensions of time having been obtained pursuant to 37 CFR 1.136(a) and no reply being received in the Office, this application became abandoned on May 7, 2005. A Notice of Abandonment was mailed on November 7, 2005.

Applicants have submitted a proper reply to the April 6, 2005 Restriction Requirement, an acceptable statement of the unintentional nature of the delay in responding to the April 6, 2005 Restriction Requirement, and the petition fee. Accordingly, the petition under 37 CFR 1.137(b) is granted.

After the mailing of this decision, the file will be returned to Technology Center AU 3629 for consideration of the election filed on June 12, 2006.

Telephone inquiries concerning this matter may be directed to the undersigned at (571) 272-3230.

Shirene Willis Brantley

Shirene Willis Brantley
Senior Petitions Attorney
Office of Petitions

UNITED STATES PATENT AND TRADEMARK OFFICE

Commissioner for Patents
United States Patent and Trademark Office
P.O. Box 1450
Alexandria, VA 22313-1450
www.uspto.gov

STALLMAN & POLLOCK LLP
ATTN: MICHAEL POLLOCK
353 SACRAMENTO STREET
SUITE 2200
SAN FRANCISCO CA 94111

COPY MAILED
AUG 29 2006
OFFICE OF PETITIONS

In re Patent No. 6,967,144 :
Issue Date: November 22, 2005 :
Application No. 10/669,045 : ON PETITION
Filed: September 23, 2003 :
Attorney Docket No. NSC1-H2610(P04882 D1) :

This is a decision on the paper filed January 17, 2006 which is treated as a petition under 37 CFR 1.182, requesting issuance of duplicate Letters Patent for the above-identified application.

The petition is **GRANTED**.

The issue notification and the original letters patent and were mailed to STALLMAN & POLLOCK LLP, 121 SPEAR ST., SUITE 290, SAN FRANCISCO, CA 94105, the address of record. A review of the file reveals however that the Issue Notification and Patent Grant were returned by the United States Postal Service as undeliverable as the forwarding order had expired.

While the instant petition argues that the original letters patent were not received, there is no indication that the address of record was properly changed with the USPTO prior to the mailing of the original letters patent.

Nonetheless, the failure to receive was not based on USPTO error and since the original letters patent were not lost, the original letters patent were re-mailed on April 6, 2006 to STALLMAN & POLLOCK LLP, ATTN: MICHAEL POLLOCK 353 SACRAMENTO STREET SUITE 2200 SAN FRANCISCO CA 94111.

Telephone inquiries regarding this decision should be directed to the undersigned Petitions Attorney at (571) 272-3212.

Patricia Faison-Ball
Senior Petitions Attorney
Office of Petitions

UNITED STATES PATENT AND TRADEMARK OFFICE

Commissioner for Patents
United States Patent and Trademark Office
P.O. Box 1450
Alexandria, VA 22313-1450
www.uspto.gov

FISH & RICHARDSON, PC
P. O. BOX 1022
MINNEAPOLIS, MN 55440-1022

COPY MAILED

JUN 29 2007

OFFICE OF PETITIONS

In re Application of	:
Stephen D. Amo et al	:
Application No. 10/669,060	: DECISION ON PETITION
Filed: September 23, 2003	: UNDER 37 CFR 1.182
Attorney Docket No. 13589-012005	:

This is a decision on the petition under 37 CFR 1.182, filed May 11, 2007, requesting entry of an amendment to the specification to insert a reference to earlier-filed applications pursuant to the provisions of 35 U.S.C. § 120 for the benefit of priority to the prior-filed nonprovisional applications set forth in the amendment filed with the petition.[1]

The petition is **GRANTED**.

The above-noted abandoned application failed to make a proper reference to the prior-filed applications set forth in the accompanying amendment prior to abandonment.[2] Petitioner now requests that the abandoned application be amended by inserting a reference to the earlier-filed applications on page 1 of the specification following the title. The petition is accompanied by an amendment to include a reference to the prior-filed applications in the first line of the specification following the title of the invention.

35 U.S.C. § 120 permits entry of a subsequent amendment to an abandoned application in applications filed prior to November 29, 2000 to include the benefit of an earlier filing date for

[1] This application was filed after November 29, 2000. The reference to the prior-filed applications was included in the transmittal letter rather than in the first line of the specification following the title of the invention. As the Office picked up the prior-filed applications on filing, a petition under 37 CFR 1.78(a)(3) is not required. Accordingly, the filing of a petition under 37 CFR 1.182 is the appropriate remedy in this case.

[2] The petition is also accompanied by an Application Data Sheet. However, in reviewing the claim for benefit of priority therein, it is noted that one of the application numbers is incorrect; i.e., 09/547,867, which should be 09/457,867. As the amendment correctly sets forth the application numbers of the prior-filed applications, this is considered to satisfy the requirements for submission of the claim for priority to the prior-filed applications.

purposes other than prosecution. *See* Sampson v. Commissioner of Patents and Trademarks, 195 USPQ 136 (DC DC 1976).

In view thereof, the request for entry of an amendment to insert a reference to the earlier-filed applications is granted.

Any inquiries concerning this decision may be directed to the undersigned at (571) 272-3218.

Frances Hicks
Petitions Examiner
Office of Petitions

UNITED STATES PATENT AND TRADEMARK OFFICE

Commissioner for Patents
United States Patent and Trademark Office
P.O. Box 1450
Alexandria, VA 22313-1450
www.uspto.gov

BLAKELY SOKOLOFF TAYLOR & ZAFMAN
12400 WILSHIRE BOULEVARD
SEVENTH FLOOR
LOS ANGELES CA 90025-1030

COPY MAILED

MAR 0 3 2006

OFFICE OF PETITIONS

ON PETITION

In re Application of :
Been-Yih Jin et al :
Application No. 10/669,064 :
Filed: September 23, 2003 :
Attorney Docket No. 42P15997 :

This is a decision on the petition, filed February 22, 2006, under 37 CFR 1.313(c)(2) to withdraw the above-identified application from issue after payment of the issue fee.

The petition is **GRANTED**.

The above-identified application is withdrawn from issue for consideration of a submission under 37 CFR 1.114 (request for continued examination). See 37 CFR 1.313(c)(2).

Petitioner is advised that the issue fee paid on January 30, 2006, in the above-identified application cannot be refunded. If, however, the above-identified application is again allowed, petitioner may request that it be applied towards the issue fee required by the new Notice of Allowance.[1]

Telephone inquiries should be directed to the undersigned at (571) 272-3208.

The examiner of Technology Center AU 2823 will consider the request for continued examination under 37 CFR 1.114.

Karen Creasy
Petitions Examiner
Office of Petitions
Office of the Deputy Commissioner
for Patent Examination Policy

---

[1] The request to apply the issue fee to the new Notice may be satisfied by completing and returning the new Issue Fee Transmittal Form PTOL-85(b), which includes the following language thereon: "Commissioner for Patents is requested to apply the Issue Fee and Publication Fee (if any) or re-apply any previously paid issue fee to the application identified above." Petitioner is advised that, whether a fee is indicated as being due or not, the Issue Fee Transmittal Form **must** be completed and timely submitted to avoid abandonment. Note the language in bold text on the first page of the Notice of Allowance and Fee(s) Due (PTOL-85).

UNITED STATES PATENT AND TRADEMARK OFFICE

Commissioner for Patents
United States Patent and Trademark Office
P.O. Box 1450
Alexandria, VA 22313-1450
www.uspto.gov

GARLICK HARRISON & MARKISON
P.O. BOX 160727
AUSTIN, TX 78716-0727

COPY MAILED

OCT 1 5 2004

OFFICE OF PETITIONS

In re Application of
Ba-Zhong Shen et al
Application No. 10/669,066
Filed: September 23, 2003
Attorney Docket No. BP3036

: DECISION ON PETITIONS
: UNDER 37 CFR 1.78(a)(3)
: UNDER 37 CFR 1.78(a)(6)

This is a decision on the petition under 37 CFR § 1.78(a)(3), filed August 25, 2004, which is being treated under 37 CFR §§ 1.78(a)(3) and 1.78(a)(6), to accept an unintentionally delayed claim under 35 U.S.C. §§ 120 and 119(e) for the benefit of the prior-filed nonprovisional and provisional applications, the amendment of which is embodied in the instant petition.[1]

The petition is DISMISSED.

A petition for acceptance of a claim for late priority under 37 CFR §§ 1.78(a)(3) and 1.78(a)(6) is only applicable to those applications filed on or after November 29, 2000. Further, the petition is appropriate only after the expiration of the period specified in 37 CFR §§ 1.78(a)(2)(ii) and 1.78(a)(5)(ii). In addition, the petition under 37 CFR §§ 1.78(a)(3) and 1.78(a)(6) must be accompanied by:

(1) the reference required by 35 U.S.C. §§ 120 and 119(e) and 37 CFR §§ 1.78(a)(2)(i) and 1.78(a)(5)(i) of the prior-filed application, unless previously submitted;
(2) the surcharge set forth in § 1.17(t); and
(3) a statement that the entire delay between the date the claim was due under 37 CFR §§ 1.78(a)(2)(ii) and 1.78(a)(5)(ii) and the date the claim was filed was unintentional. The Commissioner may require additional where there is a question whether the delay was unintentional.

The instant petition does not comply with item (1).

[1] Petitioner is advised that the amendment must be included in a separate paper, since different matters are handled by different branches of the Office. *Note* 37 CFR 1.4(c) and 37 CFR 1.121.

The claim for benefit of the prior-filed applications cannot be accepted at this time. In this regard, 37 CFR 1.78(a)(2)(i) requires that any nonprovisional application claiming the benefit of one or more **prior-filed** copending nonprovisional applications must contain or be amended to contain a reference to each such **prior-filed** application, identifying it by application number (consisting of the series code and serial number) **and indicating the relationship of the applications**. The relationship between the applications is whether the subject application is a continuation, divisional, or continuation-in-part of a prior-filed nonprovisional application. An example of a proper benefit claim is: "This application is a continuation of Application No. 10/—, filed —" **(inclusion of the title of the invention of each application is not necessary)**. *See* Manual of Patent Examining Procedure (8th ed., August 2001), Section 201.11, Reference to First Application.

In reviewing the chain of applications to which applicants are seeking to claim priority, it does not appear that petitioner has complied with MPEP Section 201.06(d). The amendment submitted with the instant petition cannot be entered since the relationship of each application to the other is not clearly stated to which priority is being claimed. More specifically, as an example, the amendment states that the present application claims priority to U.S. Provisional Patent Serial No. 60/384,698, filed **May 31, 2002**..., U.S. Provisional Patent Serial No. 60/478, 690, filed **June 13, 2003**..., is a CIP of 10/264,486, filed **October 4, 2002**.... The instant application cannot claim direct priority to U.S. Provisional Patent Serial No. 60/384,698, since the present file was filed after the 12 months of the Provisional Patent Serial No. 60/384,698. Therefore, petitioner must review the chain of applications and ensure that compliance with 35 U.S.C. §§ 120 and 119(e) has been met and, further, must clearly set forth the relationship of each application to the earlier-filed application (i.e., use "which" and "and" to denote the proper relationship between each prior-filed and intermediate application). The amendment as written is unclear as to the relationship of the subject application to the other prior-filed and intermediate applications set forth in the amendment. Petitioner should also note that the prior-filed application must have a filing date earlier than the date of the application claiming the prior-filed application.

Accordingly, before the petition under 37 CFR §§ 1.78(a)(3) and 1.78(a)(6) can be granted, a renewed petition and a substitute amendment clearly stating the relationship of the prior-filed applications to the instant application is required.

Further correspondence with respect to this matter should be addressed as follows:

By mail: Mail Stop PETITIONS

Commissioner for Patents
Post Office Box 1450
Alexandria, VA 22313-1450

By hand: Customer Window located at:
U.S. Patent and Trademark Office
220 20th Street S
Customer Window, Mail Stop Petitions
Crystal Plaza Two Lobby, Room 1B03
Arlington, VA 22202

By fax: (703) 872-9306
ATTN: Office of Petitions

The Change of Correspondence Address filed August 25 ,2004 is noted and made of record.

Any questions concerning this matter may be directed to Wan Laymon at (571) 272-3220.

Frances Hicks

Frances Hicks
Lead Petitions Examiner
Office of Petitions
Office of the Deputy Commissioner
for Patent Examination Policy

UNITED STATES PATENT AND TRADEMARK OFFICE

Commissioner for Patents
United States Patent and Trademark Office
P.O. Box 1450
Alexandria, VA 22313-1450
www.uspto.gov

GARLICK HARRISON & MARKSON
P.O. BOX 160727
AUSTIN, TX 78716-0727

COPY MAILED

FEB 16 2005

OFFICE OF PETITIONS

In re Application of
Ba-Zhong Shen et al
Application No. 10/669,066
Filed: September 23, 2003
Attorney Docket No. BP3036

: DECISION ON PETITION
: UNDER 37 CFR 1.78(a)(3)
:
:

This is a decision on the renewed petitions under 37 CFR 1.78(a)(3), filed October 22, 2004, which is being treated under 37 CFR 1.78(a)(3) and 1.78(a)(6), to accept an unintentionally delayed claim under 35 U.S.C. §§120 and 119(e) for the benefit of prior-filed nonprovisional and provisional applications, as set forth in the concurrently filed amendment.

The petitions are **Granted**.

A petition for acceptance of a claim for late priority under 37 CFR 1.78(a)(3) and 1.78(a)(6) is only applicable to those applications filed on or after November 29, 2000. Further, the petition is appropriate only after the expiration of the period specified in 37 CFR 1.78(a)(2)(ii) and 1.78(a)(5)(ii). In addition, the petition under 37 CFR §§ 1.78(a)(3) and 1.78(a)(6) must be accompanied by:

(1) the reference required by 35 U.S.C. §§ 120 and 119(e) and 37 CFR 1.78(a)(2)(i) and 1.78(a)(5)(i) of the prior-filed application, unless previously submitted;
(2) the surcharge set forth in § 1.17(t); and
(3) a statement that the entire delay between the date the claim was due under 37 CFR 1.78(a)(2)(ii) and 1.78(a)(5)(ii) and the date the claim was filed was unintentional. The Commissioner may require additional where there is a question whether the delay was unintentional.

The instant application was filed on September 23, 2003 and was pending at the time of filing of the instant petition. A reference to the prior-filed applications has been included in an amendment to the first sentence of the specification following the title, as required by 37 CFR 1.78(a)(2)(iii) and 1.78(a)(5)(iii).

The instant nonprovisional application was filed after November 29, 2000, and the claim for priority herein is submitted after expiration of the period specified in 37 CFR 1.78(a)(2)(ii) and

1.78(a)(5)(ii). *See* 35 U.S.C. § 120 and § 119(e). Accordingly, having found that the instant petition satisfies the conditions of 37 CFR 1.78(a)(3) and 1.78(a)(6) for acceptance of an unintentionally delayed claim for priority under 35 U.S.C. § 120 and § 119(e), the petition to accept an unintentionally delayed claim of benefit to the prior-filed applications is granted.

The granting of the petition to accept the delayed benefit claim to the prior-filed applications under 37 CFR 1.78(a)(3) and 1.78(a)(6) should not be construed as meaning that the instant application is entitled to the benefit of the filing date of the prior-filed applications. In order for the instant application to be entitled to the benefit of the prior-filed applications, all other requirements under 35 U.S.C. §120 and 1.78(a)(1) and (a)(2) and under 35 U.S.C. §119(e) and 37 CFR 1.78(a)(4) and (a)(5) must be met. Similarly, the fact that the corrected Filing Receipt accompanying this decision on petition includes the prior-filed applications should not be construed as meaning that applicant is entitled to the claim for benefit of priority to the prior-filed applications noted thereon. Accordingly, the examiner will, in due course, consider this benefit claim and determine whether the instant application is entitled to the benefit of the earlier filing date.

A corrected Filing Receipt, which includes the priority claim to the prior-filed applications, accompanies this decision on petition.

Any questions concerning this matter may be directed to Wan Laymon at (571) 272-3220.

This matter is being referred to Technology Center Art Unit 2133 for appropriate action on the amendment submitted October 22, 2004, including consideration by the examiner of the claim under 35 U.S.C. § 120 and 37 CFR 1.78(a)(2) for the benefit of the prior-filed application, and for consideration of the claim under 35 U.S.C. §119(e) and 37 CFR 1.78(a)(5) for the benefit of the prior-filed provisional application.

Frances Hicks

Frances Hicks
Lead Petitions Examiner
Office of Petitions
Office of the Deputy Commissioner
for Patent Examination Policy

ATTACHMENT Corrected Filing Receipt

UNITED STATES PATENT AND TRADEMARK OFFICE

Commissioner for Patents
United States Patent and Trademark Office
P.O. Box 1450
Alexandria, VA 22313-1450
www.uspto.gov

DINSMORE & SHOHL LLP
SUITE 500
ONE DAYTON CENTRE
DAYTON, OH 45402-2023

COPY MAILED

JUN 29 2005

OFFICE OF PETITIONS

In re Application of
Daniel C. Cyphers et al
Application No. 10/669,082
Filed: September 23, 2003
Attorney Docket No. SKY 0001
PA/41130.3

DECISION ON PETITION UNDER
37 CFR 1.313(c)(1)

This is a decision on the petition, filed June 22, 2005, under 37 CFR 1.313(c)(1), and supplemented on June 28, 2005, to withdraw the above-identified application from issue after payment of the issue fee.

The petition is **GRANTED**.

Petitioner states that independent claim 30 included a claim recitation that lacks proper antecedent basis which renders the claim unpatentable under 35 U.S.C. § 112, ¶2, as being indefinite. Therefore, petitioner requests that this application be withdrawn from issue for consideration of the proposed amendment, which includes an explanation as to how such amendment renders claim 30 patentable.

The above-identified application is withdrawn from issue due to unpatentability of one or more claims. See 37 CFR 1.313(c)(1).

Telephone inquiries should be directed to the undersigned at (571) 272-3218.

The application is being forwarded to Technology Center AU 3752 for appropriate action on the amendment submitted June 22, 2005.

Frances Hicks
Petitions Examiner
Office of Petitions

UNITED STATES PATENT AND TRADEMARK OFFICE

Commissioner for Patents
United States Patent and Trademark Office
P.O. Box 1450
Alexandria, VA 22313-1450
www.uspto.gov

FISH & RICHARDSON P.C.
PO BOX 1022
MINNEAPOLIS MN 55440-1022

COPY MAILED

JUL 11 2007

OFFICE OF PETITIONS

In re Application of	:	
Eian et al.	:	DECISION
Application No. 10/669085	:	ON PETITION
Filing or 371(c) Date: 09/23/2003	:	and NOTICE
Attorney Docket Number:	:	REGARDING
09531-154001 / Z03043	:	OATH/DECLARATION

This is a decision on the "Petition to Withdraw Holding of Abandonment Based on Failure to Receive Office Action," filed May 22, 2007. The petition is properly treated under 37 CFR 1.181(a).

This Petition is hereby **granted**.

The above-identified application became abandoned for failure to timely and properly reply to the Notice of Allowance and Issue Fee Due, mailed January 10, 2007. The Notice set a non-extendable three (3) month period for reply. No response having been received, the application became abandoned on April 11, 2007. A Notice of Abandonment was mailed May 8, 2007.

With the instant petition, Applicant has demonstrated non-receipt of the Notice by a preponderance of the evidence[1].

The holding of abandonment is hereby withdrawn.

No petition fee has been charged and none is due.

Defective oath/declaration

A review of the oath/declaration filed February 11, 2004 reveals that the oath/declaration fails to comply with 37 CFR 1.63 and 37 CFR 1.56, in that 37 CFR 1.63(b)(3) requires the oath or declaration to state that the person making the oath or declaration acknowledges the duty to disclose to the Office all information known to the person to be material to patentability as defined in § 1.56.

The oath/declaration filed February 11, 2004 states that the person making the oath or declaration acknowledges the duty to disclose to the Office all information known to the person to be material to examination.

[1] A review of Office records reveals that the Notice was inadvertently mailed to an incorrect correspondence address.

An oath/declaration in compliance with 37 CFR 1.63 is required.

The application will be referred to Technology Center Art Unit 2624 for re-mailing of the Notice of Allowance and Issue Fee Due, and Notice of Allowability.

Telephone inquiries concerning this matter should be directed to the undersigned at (571) 272-3232.

Derek L. Woods
Attorney
Office of Petitions

UNITED STATES PATENT AND TRADEMARK OFFICE

Commissioner for Patents
United States Patent and Trademark Office
P.O. Box 1450
Alexandria, VA 22313-1450
www.uspto.gov

CHRISTOPHER H. HUNTER
PARKER-HANNIFIN CORPORATION
6035 PARKLAND BOULEVARD
CLEVELAND, OH 44124-4141

COPY MAILED

MAR 07 2008

OFFICE OF PETITIONS

In re Application of	:	
KNIGHT, Steven R.	:	
Application No. 10/669,118	:	DECISION ON PETITION
Filed: September 23, 2003	:	
Attorney Docket No. **2802-135-079**	:	

This is a decision on the petition under 37 CFR 1.137(b), filed September 24, 2007, to revive the above-identified application.

The petition is **GRANTED.**

The application became abandoned for failure to reply in a timely manner to the non-final Office action mailed, January 11, 2007, which set a shortened statutory period for reply of three (3) months. A three (3) month extension of time under the provisions of 37 CFR 1.136(a) was obtained. Accordingly, the application became abandoned on July 12, 2007.

The petition satisfies the requirements of 37 CFR 1.137(b) in that petitioner has supplied (1) the reply in the form of a Notice of Appeal with appeal fee of $500; (2) the petition fee of $1500; and (3) an adequate statement of unintentional delay.

Telephone inquiries concerning this decision should be directed to Monica A. Graves at (571) 272-7253.

The application file is being referred to Technology Center Art Unit 1797 for consideration of the amendment filed September 24, 2007.

Sherry D. Brinkley
Petitions Examiner
Office of Petitions

UNITED STATES PATENT AND TRADEMARK OFFICE

COMMISSIONER FOR PATENTS
UNITED STATES PATENT AND TRADEMARK OFFICE
P.O. BOX 1450
ALEXANDRIA, VA 22313-1450
www.uspto.gov

CHRISTENSEN, O'CONNOR, JOHNSON, KINDNESS, PLLC
1420 FIFTH AVENUE
SUITE 2800
SEATTLE, WA 98101-2347

MAILED
JUL 0 5 2005
Technology Center 2100

In re Application of ROSENBERGER	:	
Application No.: 10/669,124	:	
Filing Date: September 23, 2003	:	DECISION ON PETITION
For: SYSTEM AND METHOD FOR	:	FOR ACCELERATED
WIRELESS LOCAL AREA NETWORK	:	EXAMINATION UNDER
MONITORING AND INTRUSION	:	M.P.E.P. §708.02(VIII)
DETECTION	:	

This is a decision on the petition filed May 26, 2005 under 37 CFR §1.102(d) and M.P.E.P. §708.02(VIII): Accelerated Examination, to make the above-identified application special.

The petition is **DISMISSED**.

M.P.E.P. §708.02, Section VIII, which sets out the prerequisites for a grantable petition for Accelerated Examination under 37 CFR §1.102(d), states in relevant part:

> A new application (one which has not received any examination by the examiner) may be granted special status provided that applicant (and this term includes applicant's attorney or agent) complies with each of the following items:
>
> (A) Submits a petition to make special accompanied by the fee set forth in 37 CFR 1.17(h);
>
> (B) Presents all claims directed to a single invention, or if the Office determines that all the claims presented are not obviously directed to a single invention, will make an election without traverse as a prerequisite to the grant of special status. The election may be made by applicant at the time of filing the petition for special status. Should applicant fail to include an election with the original papers or petition and the Office determines that a requirement should be made, the established telephone restriction practice will be followed. If otherwise proper, examination on the merits will proceed on claims drawn to the elected invention. If applicant refuses to make an election without traverse, the application will not be further examined at that time. The petition will be denied on the ground that the claims are not directed to a single invention, and the application will await action in its regular turn. Divisional applications directed to the nonelected inventions will not automatically be given special status based on papers filed with the petition in the parent application. Each such application must meet on its own all requirements for the new special status;

(C) Submits a statement(s) that a pre-examination search was made, listing the field of search by class and subclass, publication, Chemical Abstracts, foreign patents, etc. >The pre-examination search must be directed to the invention as claimed in the application for which special status is requested.< A search made by a foreign patent office satisfies this requirement >if the claims in the corresponding foreign application are of the same or similar scope to the claims in the U.S. application for which special status is requested<;

(D) Submits one copy each of the references deemed most closely related to the subject matter encompassed by the claims if said references are not already of record; and

(E) Submits a detailed discussion of the references, which discussion points out, with the particularity required by 37 CFR 1.111 (b) and (c), how the claimed subject matter is patentable over the references.

With respect to requirement (B), the petition does not state that Applicant will make an election without traverse if the Office determines that all claims are not obviously directed to a single invention.

Because the petition fails to satisfy all of the criteria set forth above, the petition to make special is **DISMISSED**.

Any request for reconsideration must be filed within TWO (2) MONTHS from the mailing date of this decision.

The application will remain in the status of a new application awaiting action in its regular turn.

Pinchus M. Laufer
Special Programs Examiner
Technology Center 2100
Computer Architecture, Software, and Information Security
571-272-3599

UNITED STATES PATENT AND TRADEMARK OFFICE

COMMISSIONER FOR PATENTS
UNITED STATES PATENT AND TRADEMARK OFFICE
P.O. BOX 1450
ALEXANDRIA, VA 22313-1450
www.uspto.gov

Tracy S. Powell
CHRISTENSEN O'CONNOR JOHNSON
KINDNESS PLLC
1420 Fifth Avenue, Suite 2800
Seattle, WA 98101

MAIL

SEP 2 8 2005

DIRECTOR OFFICE
TECHNOLOGY CENTER 2100

In re Application of:
J. ROSENBERGER
Application No. 10/669,124
Filed: September 23, 2003
For: SYSTEM AND METHOD FOR WIRELESS LOCAL AREA NETWORK OPERATIONAL MONITORING AND INTRUSION DETECTION

DECISION ON PETITION TO MAKE SPECIAL

This is a decision on the renewed petition, filed on July 22, 2005, under 37 C.F.R. § 1.102(d) and M.P.E.P. § 708.02(VIII): Accelerated Examination, to make the above-identified application special.

The petition is **GRANTED**.

M.P.E.P. § 708.02, Section VIII which sets out the prerequisites for a grantable petition for Accelerated Examination under 37 C.F.R. § 102(d) states in relevant part:

> A new application (one which has not received any examination by the examiner) may be granted special status provided that applicant (and this term includes applicant's attorney or agent) complies with each of the following items:
>
> (A) Submits a petition to make special accompanied by the fee set forth in 37 CFR 1.17(h);
>
> (B) Presents all claims directed to a single invention, or if the Office determines that all the claims presented are not obviously directed to a single invention, will make an election without traverse as a prerequisite to the grant of special status;
>
> (C) Submits a statement(s) that a pre-examination search was made, listing the field of search by class and subclass, publication, Chemical Abstracts, foreign patents, etc. A search made by a foreign patent office satisfies this requirement;
>
> (D) Submits one copy each of the references deemed most closely related to the subject matter encompassed by the claims if said references are not already of record; and
>
> (E) Submits a detailed discussion of the references, which discussion points out, with the particularity required by 37 CFR 1.111 (b) and (c), how the claimed subject matter is patentable over the references.

Applicant's submissions of July 22, 2005 and May 26, 2005 meet all the criteria set out above. Accordingly, the Petition is **GRANTED**.

The application is being forwarded to the Examiner of Record for expedited examination.

Vincent N. Trans
Special Program Examiner
Technology Center 2100
Computer Architecture, Software, and
Information Security
571-272-3613

UNITED STATES PATENT AND TRADEMARK OFFICE

Commissioner for Patents
United States Patent and Trademark Office
P.O. Box 1450
Alexandria, VA 22313-1450
www.uspto.gov

King & Jovanovic, PLC
170 College Avenue
SUITE 230
HOLLAND, MI 49423

COPY MAILED

DEC 21 2004

OFFICE OF PETITIONS

In re Application of :
James A.Medsker, et al. :
Application No. 10/669,126 : ON PETITION
Filed: September 23, 2003 :
Attorney Docket No. JDM-031118 :

This is a decision on the petition under 37 CFR 1.137(b), filed by October 5, 2004, to revive the above-identified application.

The petition is **GRANTED**.

The application became abandoned for failure to timely respond to a Notice to File Missing Parts mailed December 15, 2003. The notice required the statutory basic filing fee, an oath or declaration under 37 CFR 1.63, the requisite surcharge under 37 CFR 1.16(e), and replacement drawings in compliance with 37 CFR 1.84 and 37 CFR 1.121.

On October 5, 2004, the present petition was filed, as well as the basic filing fee, the surcharge, an executed declaration under 37 CFR 1.63, replacement drawings and a 5-month petition for extension of time.

Extensions of time under 37 CFR 1.136 are available only if asked for "prior to or with the response." In no case, however, may an applicant respond later than the maximum time period set by statute. Accordingly, if the question of abandonment arises when the provisions of 37 CFR 1.136 can no longer be used, then the application is abandoned when the unextended time for response has expired. Therefore, no extension of time fees are due on a petition for revival. In view thereof, the $1,005 extension of time fee submitted with the petition is unnecessary and will be refunded to petitioner's deposit account as authorized.

Thereafter the application will be referred to the Office of Initial Patent Examination (OIPE) for further processing.

Telephone inquires related to this decision should be directed to the undersigned at (571) 272-3204. Telephone inquiries related to OIPE processing should be directed to their hotline at (703) 308-1202.

Sherry D. Brinkley

Sherry D. Brinkley
Petitions Examiner
Office of Petitions
Office of the Deputy Commissioner
for Patent Examination Policy

UNITED STATES PATENT AND TRADEMARK OFFICE

COMMISSIONER FOR PATENTS
UNITED STATES PATENT AND TRADEMARK OFFICE
P.O. BOX 1450
ALEXANDRIA, VA 22313-1450
www.uspto.gov

COPY MAILED

DEC 2 8 2007

OFFICE OF PETITIONS

CELIGHT, INC.
12200 TECH RD.
SILVER SPRING, MD 20904

In re Application of
Isaac Shpantzer, et al.
Application No. 10/669,130
Filed: September 22, 2003
Attorney Docket No. 39878-0030

ON PETITION

This is a decision on the petition, filed August 31, 2007, to revive the above-identified application under the provisions of 37 CFR 1.137(b).

The petition is **GRANTED**.

This application became abandoned for failure to submit corrected drawings on or before April 12, 2007, as required by the Notice of Allowability mailed January 12, 2007. A Notice of Abandonment was mailed on August 20, 2007. In response, on August 31, 2007, the present petition was filed.

The petition satisfies the requirements of 37 CFR 1.137(b) in that petitioner has supplied (1) the reply in the form of corrected drawings, (2) the petition fee of $750; and (3) an adequate statement of unintentional delay.

The application is being referred to the Office of Publications to oversee the review of the drawing filed August 31, 2007 and for processing into a patent.

Telephone inquires related to this decision may be directed to the undersigned at (571) 272-3204. Status inquires related to processing at Publishing Division should be directed to (571) 272-4200.

Sherry D. Brinkley
Petitions Examiner
Office of Petitions

UNITED STATES PATENT AND TRADEMARK OFFICE

Commissioner for Patents
United States Patent and Trademark Office
P.O. Box 1450
Alexandria, VA 22313-1450
www.uspto.gov

AUG 19 2005

Charles N.J. Ruggiero, Esq.
Ohlandt, Greeley, Ruggiero & Perle, L.L.P.
One Landmark Square, 10th Floor
Stamford CT 06901-2682

In re Application of :
Martin A. Cohen et al :
Serial No.: 10/669155 :
Filed: September 23, 2003 :
For: A Controller and Method for a :
Fabric Grooming Device :

DECISION ON PETITION

This is in response to applicants' petition filed March 21, 2005, to make the above-identified application special under the provisions of 37 CFR 1.102(d), based on infringement.

Applicant has satisfied the provisions set forth in M.P.E.P. 708.02, II. Therefore the petition is **GRANTED**.

The application will be forwarded to the examiner for action on the merits commensurate with this decision.

Should there be any questions with regard to this letter please contact Frederick Schmidt by letter addressed to the Director, Technology Center 3700, P.O. Box 1450 Alexandria, VA 22313-1450, or by telephone at (571) 272-2975 or by facsimile transmission at (703) 872-9306.

Frederick R. Schmidt

Frederick R. Schmidt, Director
Technology Center 3700

UNITED STATES PATENT AND TRADEMARK OFFICE

Commissioner for Patents
United States Patent and Trademark Office
P.O. Box 1450
Alexandria, VA 22313-1450
www.uspto.gov

GARLICK HARRISON & MARKISON
P.O. BOX 160727
AUSTIN TX 78716-0727

COPY MAILED

JAN 19 2007

OFFICE OF PETITIONS

In re Application of	:	
Ba-Zhong Shen et al.	:	
Application No. 10/669,177	:	DECISION GRANTING PETITION
Filed: September 23, 2003	:	UNDER 37 CFR 1.313(c)(2)
Attorney Docket No. BP3036.1	:	

This is a decision on the petition under 37 CFR 1.313(c)(2), filed January 16, 2007, to withdraw the above-identified application from issue after payment of the issue fee.

The petition is **GRANTED**.

The above-identified application is withdrawn from issue for consideration of a submission under 37 CFR 1.114 (request for continued examination). *See* 37 CFR 1.313(c)(2).

Petitioner is advised that the issue fee paid on December 27, 2006 cannot be refunded. If, however, this application is again allowed, petitioner may request that it be applied towards the issue fee required by the new Notice of Allowance.[1]

Telephone inquiries should be directed to Terri Williams at (571) 272-2991.

This application is being referred to Technology Center AU 2133 for processing of the request for continued examination under 37 CFR 1.114 and for consideration of the concurrently filed Information Disclosure Statement.

Frances Hicks
Petitions Examiner
Office of Petitions

---

[1] *The request to apply the issue fee to the new Notice may be satisfied by completing and returning the new Part B – Fee(s) Transmittal Form (along with any balance due at the time of submission). Petitioner is advised that the Issue Fee Transmittal Form must be completed and timely submitted to avoid abandonment of the application.*

UNITED STATES PATENT AND TRADEMARK OFFICE

Commissioner for Patents
United States Patent and Trademark Office
P.O. Box 1450
Alexandria, VA 22313-1450
www.uspto.gov

THOMAS, KAYDEN, HORSTEMEYER & RISLEY
100 GALLERIA PARKWAY, NW
STE. 1750
ATLANTA GA 30339-5948

COPY MAILED

MAY 0 8 2006

OFFICE OF PETITIONS

In re Application of :
Farrokh Ayazi et al :
Application No. 10/669,178 : ON PETITION
Filed: September 23, 2003 :
Attorney Docket No. 062020-1450 :

This is a decision on the petition, filed April 25, 2006, under 37 CFR 1.313(c)(2) to withdraw the above-identified application from issue after payment of the issue fee.

The petition is **GRANTED**.

The above-identified application is withdrawn from issue for consideration of a submission under 37 CFR 1.114 (request for continued examination). See 37 CFR 1.313(c)(2).

Petitioner is advised that the issue fee paid on April 25, 2006, in the above-identified application cannot be refunded. If, however, the above-identified application is again allowed, petitioner may request that it be applied towards the issue fee required by the new Notice of Allowance.[1]

Telephone inquiries should be directed to the undersigned at (571) 272-3208.

The examiner of Technology Center AU 2817 will consider the request for continued examination under 37 CFR 1.114.

Karen Creasy
Petitions Examiner
Office of Petitions

---

[1] The request to apply the issue fee to the new Notice may be satisfied by completing and returning the new Issue Fee Transmittal Form PTOL-85(b), which includes the following language thereon: "Commissioner for Patents is requested to apply the Issue Fee and Publication Fee (if any) or re-apply any previously paid issue fee to the application identified above." Petitioner is advised that, whether a fee is indicated as being due or not, the Issue Fee Transmittal Form **must** be completed and timely submitted to avoid abandonment. Note the language in bold text on the first page of the Notice of Allowance and Fee(s) Due (PTOL-85).

UNITED STATES PATENT AND TRADEMARK OFFICE

COMMISSIONER FOR PATENTS
UNITED STATES PATENT AND TRADEMARK OFFICE
P.O. BOX 1450
ALEXANDRIA, VA 22313-1450
www.uspto.gov

LAW OFFICES OF MARK C. PICKERING
P.O. BOX 300
PETALUMA CA 94953

COPY MAILED

SEP 2 2 2005

OFFICE OF PETITIONS

Applicant: Ripy et al.
Appl. No.: 10/669,192
Filing Date: September 23, 2003
Title: METHOD AND APPARATUS OF ALLOCATING MINIMUM AND MAXIMUM BANDWIDTHS ON A BUS-BASED COMMUNICATION SYSTEM
Attorney Docket No.: 200-65300
Pub. No.: US 2005/0080968 A1
Pub. Date: April 14, 2005

This is a decision on the request for a corrected patent application publication under 37 CFR 1.221(b), filed on May 23, 2005, for the above-identified application.

The request is granted.

The corrected patent application publication will be published in due course, unless the patent issues before the application is republished.

Inquiries relating to this matter may be directed to Mark Polutta at (571) 272-7709 (voice).

Mark O. Polutta
Office of Patent Legal Administration
Office of the Deputy Commissioner
for Patent Examination Policy

SPE RESPONSE FOR CERTIFICATE OF CORRECTION

Paper No.: _____

DATE : 7-20-06

TO SPE OF : ART UNIT 2882

SUBJECT : Request for Certificate of Correction for Appl. No.: 10/669192 Patent No.: 7065594

Please respond to this request for a certificate of correction within 7 days.

Please review the requested changes/corrections as shown in the **COCIN** document(s) in the IFW application image. No new matter should be introduced, nor should the scope or meaning of the claims be changed.

Please check Title / Col.

Please complete the response (see below) and forward the completed response to scanning using document code **COCX**.

Certificates of Correction Branch

703-308-9390 ext. _____

Thank You For Your Assistance

The request for issuing the above-identified correction(s) is hereby:

Note your decision on the appropriate box.

☒ **Approved**	All changes apply.
☐ **Approved in Part**	Specify below which changes **do not** apply.
☐ **Denied**	State the reasons for denial below.

Comments: _____

MARK H. RINEHART
SUPERVISORY PATENT EXAMINER
TECHNOLOGY CENTER 2100

AUG 03 2006 SPE

2111
Art Unit

(Form PTO-1050)

UNITED STATES PATENT AND TRADEMARK OFFICE
CERTIFICATE OF CORRECTION

PATENT NO: 7,065,594 B2

APPLICATION NO.: 10/669,192

ISSUE DATE: June 20, 2006

INVENTOR(S): Ripy et al.

It is certified that an error appears in the above-identified patent and that said Letters Patent is hereby corrected as shown below:

Title Page,

Item (65), **Prior Publication Data,** insert --US 2005/0268015 A9, Dec. 1, 2005--.

Column 3,

Line 29, delete "SEL-AO and SEL-AI" and replace with --SEL-A0 and SEL-A1--.

Column 5,

Line 28, insert text --A better understanding of the features and advantages of the present invention will be obtained by reference to the following detailed description and accompanying drawings that set forth an illustrative embodiment in which the principles of the invention are utilized--.

MAILING ADDRESS OF SENDER:
Mark C. Pickering
Law Offices of Mark C. Pickering
P.O. Box 300
Petaluma, CA 94953-0300

PATENT NO. 7,065,594 B2
No. of additional copies

⇨

2006

UNITED STATES PATENT AND TRADEMARK OFFICE

Commissioner for Patents
United States Patent and Trademark Office
P.O. Box 1450
Alexandria, VA 22313-1450
www.uspto.gov

David K. Lucente
Seagate Technology LLC
Intellectual Property – COL2LGL
389 Disc Drive
Longmont, CO 80503

MAILED

APR 03 2006

Technology Center 2100

In re Application of:
Robert G. BEAN, et al
Application No. 10/669,196
Filed: September 23, 2003
For: DATA RELIABILITY BIT STORAGE QUALIFIER AND LOGICAL UNIT METADATA

DECISION ON PETITION TO MAKE SPECIAL

This is a decision on the petition, originally filed on 30 June 2005 under 37 C.F.R. §102(d) and M.P.E.P. § 708.02(VIII): Accelerated Examination, to make the above-identified application special.

The petition is **DISMISSED**.

M.P.E.P. § 708.02, Section VIII which sets out the prerequisites for a grantable petition for Accelerated Examination under 37 C.F.R. § 102(d) states in relevant part:

> A new application (one which has not received any examination by the examiner) may be granted special status provided that applicant (and this term includes applicant's attorney or agent) complies with each of the following items:
>
> (A) Submits a petition to make special accompanied by the fee set forth in 37 CFR § 1.17(h);
>
> (B) Presents all claims directed to a single invention, or if the Office determines that all the claims presented are not obviously directed to a single invention, will make an election without traverse as a prerequisite to the grant of special status;
>
> (C) Submits a statement(s) that a pre-examination search was made, listing the field of search by class and subclass, publication, Chemical Abstracts, foreign patents, etc. A search made by a foreign patent office satisfies this requirement;
>
> (D) Submits one copy each of the references deemed most closely related to the subject matter encompassed by the claims if said references are not already of record; and

(E) Submits a detailed discussion of the references, which discussion points out, with the particularity required by 37 CFR §§ 1.111 (b) and (c), how the claimed subject matter is patentable over the references.

In those instances where the request for this special status does not meet all the prerequisites set forth above, applicant will be notified and the defects in the request will be stated. The application will remain in the status of a new application awaiting action in its regular turn. In those instances where a request is defective in one or more respects, applicant will be given one opportunity to perfect the request in a renewed petition to make special. If perfected, the request will then be granted. If not perfected in the first renewed petition, any additional renewed petitions to make special may or may not be considered at the discretion of the Group Special Program Examiner.

Applicant's submission of 30 June 2005 fails to meet requirement (E) as set forth above. Responsive to requirement (e), applicant must provide a "**detailed discussion of the references**, which discussion points out, with the particularly requirement by 37 CFR § 1.111(b) and (c), how the claimed subject matter is patentable over the references." Petitioner should ensure that the above discussion is directed to how the language of each of the **independent claims** are specifically distinguishable and patentable from the references provided pursuant to requirement (e) supra.

Accordingly, the petition is **DISMISSED**. Petitioner is given one opportunity to perfect the petition. Any request for reconsideration must be filed within TWO MONTHS of the mail date of this decision.

Until the renewed petition is submitted, the application will be returned to the examiner's docket to await treatment on the merits in the normal order of examination.

Vincent N. Trans
Special Program Examiner
Technology Center 2100
Computer Architecture, Software, and
Information Security
571-272-3613

UNITED STATES PATENT AND TRADEMARK OFFICE

Commissioner for Patents
United States Patent and Trademark Office
P.O. Box 1450
Alexandria, VA 22313-1450
www.uspto.gov

MAILED

JUL 19 2006

Technology Center 2100

Fellers, Snider, Blankenship
Bailey & Tippens, P.C.
Suite 1700
100 North Broadway
Oklahoma City, OK 73102-8820

In re Application of: Bean, et al.
Application No. 10/669,196
Filed: September 23, 2003
For: DATA RELIABILITY BIT STORAGE QUALIFIER AND LOGICAL UNIT METADATA

DECISION ON PETITION
TO MAKE SPECIAL
(ACCELERATED EXAMINATION)
UNDER M.P.E.P. §708.02 (VIII)

This is a decision on the Request for Reconsideration filed June 1, 2006 on the petition to make special under 37 C.F.R. §102(d) and M.P.E.P. §708.02(VIII): Accelerated Examination, originally filed on June 30, 2005 and dismissed on April 3, 2006.

The Petition is **GRANTED**.

M.P.E.P. §708.02, Section VIII which sets out the prerequisites for a grantable petition for Accelerated Examination under 37 C.F.R. §1.102(d) states in relevant part:

A new application (one which has not received any examination by the examiner) may be granted special status provided that applicant (and this term includes applicant's attorney or agent) complies with each of the following items:

(a) Submits a petition to make special accompanied by the fee set forth in 37 CFR 1.17(h);

(b) Presents all claims directed to a single invention, or if the Office determines that all the claims presented are not obviously directed to a single invention, will make an election without traverse as a prerequisite to the grant of special status;

(c) Submits a statement(s) that a pre-examination search was made, listing the field of search by class and subclass, publication, Chemical Abstracts, foreign patents, etc. The pre-examination search must be directed to the invention as claimed in the application for which special status is requested. A search made by a foreign patent office satisfies this requirement;

(d) Submits one copy each of the references deemed most closely related to the subject matter encompassed by the claims if said references are not already of record; and

(e) Submits a detailed discussion of the references, which discussion points out, with the particularity required by 37 CFR 1.111 (b) and (c), how the claimed subject matter is patentable over the references.

Petition to Make Special **GRANTED** since all of the requirements for special status under MPEP § 708.02(VIII) have now been met.

If the application is subsequently allowed, it will be given priority for printing. See M.P.E.P. §1309.

Brian L. Johnson
Special Program Examiner
Technology Center 2100
Computer Architecture, Software and Information Security
571-272-3595

UNITED STATES PATENT AND TRADEMARK OFFICE

Commissioner for Patents
United States Patent and Trademark Office
P.O. Box 1450
Alexandria, VA 22313-1450
www.uspto.gov

FINNEGAN, HENDERSON, FARABOW, GARRETT & DUNNER
901 NEW YHORK AVENUE, NW
WASHINGTON DC 20001-4413

COPY MAILED
AUG 1 0 2006
OFFICE OF PETITIONS

In re Application of	:	
Robert W. Esmond et al	:	
Application No. 10/669,217	:	ON PETITION
Filed: September 23, 2003	:	
Attorney Docket No. 4012.0373-02000	:	

This is a decision on the petition, filed August 9, 2006, under 37 CFR 1.313(c)(2) to withdraw the above-identified application from issue after payment of the issue fee.

The petition is **GRANTED**.

The above-identified application is withdrawn from issue for consideration of a submission under 37 CFR 1.114 (request for continued examination). See 37 CFR 1.313(c)(2).

Petitioner is advised that the issue fee paid on May 8, 2006, in the above-identified application cannot be refunded. If, however, the above-identified application is again allowed, petitioner may request that it be applied towards the issue fee required by the new Notice of Allowance.[1]

Telephone inquiries should be directed to the undersigned at (571) 272-3208.

The examiner of Technology Center AU 1618 will consider the request for continued examination under 37 CFR 1.114.

Karen Creasy
Petitions Examiner
Office of Petitions

---

[1] The request to apply the issue fee to the new Notice may be satisfied by completing and returning the new Issue Fee Transmittal Form PTOL-85(b), which includes the following language thereon: "Commissioner for Patents is requested to apply the Issue Fee and Publication Fee (if any) or re-apply any previously paid issue fee to the application identified above." Petitioner is advised that, whether a fee is indicated as being due or not, the Issue Fee Transmittal Form **must** be completed and timely submitted to avoid abandonment. Note the language in bold text on the first page of the Notice of Allowance and Fee(s) Due (PTOL-85).

UNITED STATES PATENT AND TRADEMARK OFFICE

COMMISSIONER FOR PATENTS
UNITED STATES PATENT AND TRADEMARK OFFICE
P.O. BOX 1450
ALEXANDRIA, VA 22313-1450
www.uspto.gov

Paper No. _____

Date : August 10, 2006

TO : Director, Office of Patent Publication

FROM : Office of the Deputy Commissioner
for Patent Examination Policy

SUBJECT : Withdrawal from Issue of

Applicant(s) :Robert W. Esmond et al
Application No. :10/669,217
Filed :September 23, 2003

The above-identified application has been assigned Patent No. 7,094,793 and an issue date of August 22, 2006.

It is hereby directed that this application be withdrawn from issue at the request of the applicant.

Do not refund the issue fee.

The following erratum should be published in the Official Gazette if the above-identified application is published in the OG of August 22, 2006:

"All reference to Patent No. 7,094,793 to Robert W. Esmond of Virginia for METHOD FOR TREATING OR PREVENTING ALZHEIMER'S DISEASE appearing in the Official Gazette of August 22, 2006 should be deleted since no patent was granted."

Karen Creasy

Karen Creasy
Petitions Examiner
Office of Petitions
Office of the Deputy Commissioner
for Patent Examination Policy

cc: Paul Harrison, MDW-4B03,(FAX-273-5468)
Deneise Boyd, MDE-3D39 (FAX-273-5124)
Mary Louise McAskill, ST-8C15 (FAX 305-4372)
Niomi Farmer, ST-8C14 (FAX-305-4372)
Mary E. Johnson (Cookie), MDE-7C71 (FAX 273-0038
Duane Davis P/OPC MDE-7D89

UNITED STATES PATENT AND TRADEMARK OFFICE

COMMISSIONER FOR PATENTS
UNITED STATES PATENT AND TRADEMARK OFFICE
P.O. BOX 1450
ALEXANDRIA, VA 22313-1450
www.uspto.gov

Paper No.

DECHERT LLP
P.O. BOX 10004
PALO ALTO, CA 94303

COPY MAILED
MAY 13 2004
OFFICE OF PETITIONS

In re Application of:
Zhou (Mike) Hong
Application No. 10/669,236
Filed: September 23, 2003
Title of Invention: APPARATUS AND METHOD FOR REDUCING THE MEMORY TRAFFIC OF A GRAPHIC RENDERING SYSTEM

DECISION REFUSING STATUS UNDER 37 CFR 1.47(b)

This is in response to a petition under 37 CFR 1.47(b), filed March 22, 2004, to allow a person to whom an inventor has assigned or agreed in writing to assign the invention, or who otherwise shows sufficient proprietary interest in the matter justifying such action, to make application on behalf of and as agent for all inventors. The one (1) month extension of time requested is hereby granted.

The petition is **dismissed**.

Rule 47 applicant is given TWO (2) MONTHS from the mailing date of this decision to reply, correcting the below-noted deficiencies. Any reply should be entitled "Request for Reconsideration of Petition Under 37 CFR 1.47(b)", and should only address the deficiencies noted below, except that the reply may include an oath or declaration executed by the non-signing inventor. Failure to respond will result in abandonment of the application. Any extensions of time will be governed by 37 CFR 1.136(a).

The above-identified application was filed on September 23, 2003, without an executed oath or declaration. This Office mailed a Notice to File Missing Parts of Nonprovisional Application (hereinafter "Notice") on December 18, 2003, requiring, *inter alia*, a properly signed oath or declaration and a late filing fee, oath or declaration and surcharge. The Notice further advised Applicant that the oath or declaration failed to identify the citizenship of the inventor.

In response to the Notice, Applicant files the instant petition wherein Applicant avers that the nonsigning inventor refuses to join in the application. Applicant has not filed an oath or declaration in compliance with 37 CFR 1.63 in response to the Notice. Applicant also files a copy of an Employment Verification Letter from the Human Resources Manager at S3 Graphics.

Applicable Law

A grantable petition under 37 CFR 1.47(b) requires: (1) proof that the non-signing inventor cannot be reached or refuses to sign the oath or declaration after having been presented with the application papers (specification, claims and drawings); (2) an acceptable oath or declaration in compliance with 35 U.S.C. §§ 115 and 116; (3) the petition fee; (4) a statement of the last known address of the non-signing inventor(s); (5) proof of proprietary interest; and (6) proof of irreparable harm. Applicant lacks items (2) and (5).

As to item (2), the Office notes that pursuant to Section 409.03(b)(A) of the Manuel for Patent Examining Procedure:

> Where a corporation is the 37 CFR 1.47(b) applicant, an officer (President, Vice-President, Secretary, Treasurer or Chief Executive Officer) thereof should normally sign the necessary oath or declaration. A corporation may authorize any person, including an attorney or agent registered to practice before the Patent and Trademark Office, to sign the application oath or declaration on its behalf. Where an oath or declaration is signed by a registered attorney or agent on behalf of a corporation, either proof of the attorney's or agent's authority in the form of a statement signed by an appropriate corporate officer must be submitted, or *the attorney or agent may simply state that he or she is authorized to sign on behalf of the corporation*. Where the oath or declaration is being signed on behalf of an assignee, see MPEP Section 324. An inventor may not authorize another individual to act as his or her agent to sign the application oath or declaration on his or her

> behalf. *Staeger v. Commissioner*, 189 USPQ 272 (D.D.C. 1976), *In re Striker*, 182 USPQ 507 (Comm'r Pat. 1973). (Emphasis supplied). Where an application is executed by one other than the inventor, the declaration required by 37 CFR 1.63 must state the full name, residence, post office address, and citizenship of the nonsigning inventor. Also, the title or position of the person signing must be stated if signing on behalf of a corporation under 37 CFR 1.47(b).

Applicant has not presented an oath or declaration for the patent application in compliance with 37 CFR 1.63 and 37 CFR 1.64. A properly executed oath or declaration is required.

As to item (5), applicant failed to show or provide proof that S3 Graphics has sufficient proprietary interest in the subject matter to justify the filing of the application (see MPEP 409.03(f)). Acceptable proof would include a copy of the employment agreement between the non-signing inventor and the Rule 47(b) applicant (company), a copy of an assignment agreement showing that the invention disclosed in the application is assigned to the Rule 47(b) applicant, or a legal memorandum signed by an attorney familiar with the law of the jurisdiction stating that a court of competent jurisdiction would by the weight of authority in that jurisdiction award the title of the invention to the Rule 47(b) applicant.

Further correspondence with respect to this matter should be addressed as follows:

By mail: Commissioner for Patents
PO Box 1450
Alexandria, VA 22313-1450

By FAX: (703) 872-9306
Attn: Office of Petitions

By hand: 2201 South Clark Place
Customer Window
Crystal Plaza Two, Lobby Room 1B03
Arlington, VA 22202

Telephone inquiries concerning this decision should be directed to the undersigned at (703) 305-0014.

Derek L. Woods
Petitions Attorney
Office of Petitions

UNITED STATES PATENT AND TRADEMARK OFFICE

COMMISSIONER FOR PATENTS
UNITED STATES PATENT AND TRADEMARK OFFICE
P.O. BOX 1450
ALEXANDRIA, VA 22313-1450
www.uspto.gov

DECHERT LLP
P.O. BOX 10004
PALO ALTO, CA 94303

COPY MAILED

MAR 2 4 2005

OFFICE OF PETITIONS

In re Application of:	
Zhou (Mike) Hong	
Application No. 10/669,236	DECISION GRANTING
Filed: September 23, 2003	STATUS UNDER
Title of Invention:	37 CFR 1.47(b)
APPARATUS AND METHOD FOR REDUCING	
THE MEMORY TRAFFIC OF A	
GRAPHICS RENDERING SYSTEM	

This Decision is in response to the Request for Reconsideration of Petition Under 37 CFR 1.47(b), filed July 13, 2004, to allow a person to whom an inventor has assigned or agreed in writing to assign the invention, or who otherwise shows sufficient proprietary interest in the matter justifying such action, to make application on behalf of and as agent for all inventors. The delay in treating this petition is regretted.

The petition is **granted**.

The above-identified application and papers have been reviewed and found in compliance with 37 CFR 1.47(b). This application is hereby accorded Rule 1.47(b) status.

Petitioner has shown that the non-signing inventor, Kengo Ochi, refuses to join in the application.

As provided in Rule 1.47(b), this Office will forward notice of this application's filing to the non-signing inventors at the addresses given in the Petition. Notice of the filing of this application will also be published in the Official Gazette.

The application file is being referred to Technology Center Art Unit 1773 for examination in due course.

Telephone inquiries related to this decision may be directed to the undersigned at (571) 272-3232

Derek L. Woods
Attorney/Advisor
Office of Petitions

UNITED STATES PATENT AND TRADEMARK OFFICE

COMMISSIONER FOR PATENTS
UNITED STATES PATENT AND TRADEMARK OFFICE
P.O. BOX 1450
ALEXANDRIA, VA 22313-1450
www.uspto.gov

Zhou (Mike) Hong
11512 Country Spring Court
Cupertino, CA 95014

COPY MAILED

MAR 2 4 2005

OFFICE OF PETITIONS

In re Application of: :
Zhou (Mike) Hong :
Application No. 10/669,236 : LETTER
Filed: September 23, 2003 :
Title of Invention: :
APPARATUS AND METHOD FOR REDUCING :
THE MEMORY TRAFFIC OF A :
GRAPHICS RENDERING SYSTEM :

Dear Mr. Hong:

You are named as the inventor in the above-identified United States patent application filed under the provisions of 35 U.S.C. 116 (United States Code) and 37 CFR 1.47(b), Rules of Practice in Patent Cases. Should a patent be granted on the application you will be designated therein as the inventor.

As the named inventor you are entitled to inspect any paper in the file wrapper of the application, order copies of all or any part thereof (at a prepaid cost per 37 CFR 1.19) or make your position of record in the application. Alternatively, you may arrange to do any of the preceding through a registered patent attorney or agent presenting written authorization from you. If you care to join the application, counsel of record (see below) would presumably assist you. Joining in the application would entail the filing of an appropriate oath or declaration by you pursuant to 37 CFR 1.63.

Telephone inquiries regarding this communication should be directed to the undersigned at (571) 272-3232. Requests for information regarding your application should be directed to the File Information Unit at (703) 308-2733. Information regarding how to pay for and order a copy of the application, or a specific paper in the application, should be directed to Certification Division at (703) 308-9726 or 1-800-972-6382 (outside the Washington D.C. area).

Derek L. Woods
Attorney/Advisor
Office of Petitions

cc: DECHERT LLP
P.O. BOX 10004
PALO ALTO, CA 94303

UNITED STATES PATENT AND TRADEMARK OFFICE

UNITED STATES DEPARTMENT OF COMMERCE
United States Patent and Trademark Office
Address: COMMISSIONER FOR PATENTS
P.O. Box 1450
Alexandria, Virginia 22313-1450
www.uspto.gov

MERCHANT & GOULD PC
P.O. BOX 2903
MINNEAPOLIS, MN 55402-0903

Mail Date: 04/21/2010

Applicant	: Joseph Christopher Coffey	: DECISION ON REQUEST FOR
Patent Number	: 7676592	: RECALCULATION of PATENT
Issue Date	: 03/09/2010	: TERM ADJUSTMENT IN VIEW
Appliction No	: 10/669,248	: OF WYETH
Filed	: 09/24/2003	:
		:

The Patentee's Request for Recalculation is **DISMISSED.**

This Request is deemed ineligible for consideration for one or more of the following reasons:

(A). The patent for which PTA recalculation is requested is either a design or reissue application or is a reexamination proceeding;

(B). The patent for which PTA recalculation is requested resulted from a utility or plant application filed under 35 USC 111(a) before May 29, 2000 and no CPA filed in the application on/after May 29, 2000;

(C). The patent for which PTA recalculation is requested resulted from an international application in which the international filing date was before May 29, 2000 and no CPA filed in the application on/after May 29, 2000;

(D). The patent for which PTA recalculation is requested issued on/after March 2, 2010;

(E). The Request for Recalculation was filed more than 180 days after the grant date of the patent and the request was not filed within two months of a dismissal of a request for reconsideration of the of the patent term under 37 CFR 1.705(d);

(F). The Request for Recalculation is not solely limited to USPTO pre-Wyeth interpretation of 35 U.S.C. 154(b)(2)(A);

or

(G). A civil action was filed pursuant to 35 U.S.C. 154(b)(4)(A)concerning the same patent at issue in this request.

Patentee may file a reply to this decision dismissing the Request for Recalculation. Patentee must file such reply within one month or thirty days, whichever is longer, of the mail date of the decision dismissing the Request for Recalculation. No fee is required if patentee is asserting in the reply that the dismissal for ineligibility is improper.

Patentee should use document code PET.OP if electronically filing a reply to this dismissal. If the USPTO finds that the request was improperly deemed ineligible, the USPTO will mail applicant a recalculation determination.

Patentee should be aware that in order to preserve the right to review in the United States District Court for the District of Columbia of the USPTO patent term adjustment determination, patentee must ensure that he or she also take the steps required under 35 U.S.C. 154(b)(4)(A). Nothing in the request for recalculation should be construed as providing an alternative time frame for commencing a civil action under 35 U.S.C. 154 (b)(4)(A).

Any questions concerning this decision should be directed to the Office of Patent Legal Administration at 571-272-7702.

UNITED STATES PATENT AND TRADEMARK OFFICE

Commissioner for Patents
United States Patent and Trademark Office
P.O. Box 1450
Alexandria, VA 22313-1450
www.uspto.gov

DON D. CHA
17225 W. 12TH AVE.
GOLDEN CO 80401

COPY MAILED

DEC 14 2007

OFFICE OF PETITIONS

ON PETITION

In re Application of
Leland Shapiro
Application No. 10/669,250
Filed: September 25, 2003
Attorney Docket No.: **SHAP-000130**

This is a decision on the petition filed March 7, 2007 under 37 CFR 1.137(b), [1] to revive the above-identified application.

The petition is **GRANTED**.

This application became abandoned for failure to timely reply to the non-Final Office Action mailed January 5, 2006. A shortened statutory period of three months was set for replying to the non-Final Office Action. No extensions of time having been requested, this application became abandoned April 7, 2006. The instant petition and this decision precede the mailing of the Notice of Abandonment.

This matter is being referred to Technology Center 1614 for appropriate action on the amendment filed March 7, 2007.

Telephone inquiries concerning this matter should be directed to the undersigned Petitions Attorney at (571) 272-3212.

Patricia Faison-Ball

Patricia Faison-Ball
Senior Petitions Attorney
Office of Petitions

---

[1] Effective December 1, 1997, the provisions of 37 CFR 1.137(b) now provide that where the delay in reply was unintentional, a petition may be filed to revive an abandoned application or a lapsed patent pursuant to 37 CFR 1.137(b). A grantable petition filed under the provisions of 37 CFR 1.137(b) must be accompanied by:

(1) the required reply, unless previously filed. In a nonprovisional application abandoned for failure to prosecute, the required reply may be met by the filing of a continuing application. In a nonprovisional application filed on or after June 8, 1995, and abandoned for failure to prosecute, the required reply may also be met by the filing of a request for continued examination in compliance with § 1.114. In an application or patent, abandoned or lapsed for failure to pay the issue fee or any portion thereof, the required reply must be the payment of the issue fee or any outstanding balance thereof. In an application abandoned for failure to pay the publication fee, the required reply must include payment of the publication fee.

(2) the petition fee as set forth in 37 CFR 1.17(m);

(3) a statement that the entire delay in filing the required reply from the due date for the reply until the filing of a grantable petition pursuant to 37 CFR 1.137(b) was unintentional. The Commissioner may required additional information where there is a question whether the delay was unintentional; and

(4) any terminal disclaimer (and fee as set forth in 37 CFR 1.20(d)) required pursuant to 37 CFR 1.137(c)).

UNITED STATES PATENT AND TRADEMARK OFFICE

COMMISSIONER FOR PATENTS
UNITED STATES PATENT AND TRADEMARK OFFICE
P.O. BOX 1450
ALEXANDRIA, VA 22313-1450
www.uspto.gov

FRANK ROSENBERG
18 ECHO HILL LANE
MORAGA CA 94556

COPY MAILED
MAY 14 2004
OFFICE OF PETITIONS

In re Application of :
Wang, et al. :
Filed: September 25, 2003 : ON PETITION
Application No. 10/669,263 :
Atty. Dkt. No.: 12859B-DIV :

This decision is in response to the "PETITION TO THE COMMISSIONER," filed December 29, 2003, to accord the above-identified application a filing date of September 25, 2003.

The application was submitted September 25, 2003. The Notice of Incomplete Nonprovisional Application ("Notice") mailed December 17, 2003 by the Office of Initial Patent Examination indicated that the application had not been accorded a filing date because the application was deposited without drawings as per 35 USC 113 (first sentence).

The Notice indicated the filing date would be the date of submission of the omitted drawings. Any assertion that the drawings were submitted or are not necessary for a filing date must be by way of petition.

Petitioner has submitted the omitted drawings and argues that the drawings were inadvertently omitted from the application filing. Petitioner further argues that the instant application is a divisional of parent application No. 09/788,330 (now U.S. Pat. No. 6,652,830). Petitioner further argues that the omitted drawings were incorporated by reference into the instant divisional application.

An incorporation by reference statement may be relied upon to permit the entering of a portion of the prior application into the continuation or divisional application when the portion of the prior application has been inadvertently omitted from the submitted application papers in the continuation or divisional application. The inclusion of this incorporation by reference of the prior application(s) will permit an applicant to amend the continuation or divisional application to include any subject

matter in such prior application(s), without the need for a petition provided the continuation or divisional application is entitled to a filing date notwithstanding the incorporation by reference. *See*, MPEP 201.06(c).

Accordingly, in view of the incorporation by reference of the prior application, the drawings are not new matter if these pages were part of the disclosure of the prior application.

Petitioner is advised to promptly submit a second preliminary amendment requesting entry of the omitted figures prior to the issuance of the first Office action on the merits.

In view of the above, the petition to accord the instant application a filing date of September 25, 2003 is **GRANTED**.

The application is being returned to the Office of Initial Patent Examination for further processing with a filing date of September 25, 2003.

Telephone inquiries related to this decision may be directed to the undersigned at (703) 305-0310.

Alesia M. Brown
Senior Petitions Attorney
Office of Petitions

UNITED STATES PATENT AND TRADEMARK OFFICE

COMMISSIONER FOR PATENTS
UNITED STATES PATENT AND TRADEMARK OFFICE
P.O. BOX 1450
ALEXANDRIA, VA 22313-1450
www.uspto.gov

BELL, BOYD & LLOYD, LLP
P. O. BOX 1135
CHICAGO, IL 60690

COPY MAILED

AUG 2 2 2007

OFFICE OF PETITIONS

In re Application of
Sen-Itiroh Hakomori et al
Application No. 10/669,264
Filed: September 25, 2003
Attorney Docket No. 116653-17

DECISION ON PETITION
UNDER 37 CFR 1.78(a)(3)

This is a decision on the petition under 37 CFR 1.78(a)(3), filed July 9, 2007, to accept an unintentionally delayed claim under 35 U.S.C. §120 for the benefit of priority to the prior-filed nonprovisional applications (Application Nos. 09/696,213, filed October 26, 2000, and 09/253,024, filed February 19, 1999), as set forth in the concurrently filed Application Data Sheet (ADS).

The petition is **GRANTED.**

A petition for acceptance of a claim for late priority under 37 CFR 1.78(a)(3) is only applicable to those applications filed on or after November 29, 2000. Further, the petition is appropriate only after the expiration of the period specified in 37 CFR 1.78(a)(2)(ii). In addition, the petition under 37 CFR 1.78(a)(3) must be accompanied by:

(1) the reference required by 35 U.S.C. § 120 and 37 CFR 1.78(a)(2)(i) and (iii) of the prior-filed application, unless previously submitted;
(2) the surcharge set forth in § 1.17(t); and
(3) a statement that the entire delay between the date the claim was due under 37 CFR 1.78(a)(2)(ii) and the date the claim was filed was unintentional. The Director may require additional information where there is a question whether the delay was unintentional.

All of the above requirements having been satisfied, the late claim for benefit of priority under 35 U.S.C. § 120 is accepted as being unintentionally delayed.

The granting of the petition to accept the delayed benefit claim to the prior-filed applications under 37 CFR 1.78(a)(3) should not be construed as meaning that this application is entitled to the benefit of the prior-filed applications. In order for this application to be entitled to the benefit of the prior-filed applications, all other requirements under 35 U.S.C. § 120 and 37

CFR 1.78(a)(1) and (a)(2) must be met. Similarly, the fact that the corrected Filing Receipt accompanying this decision on petition includes the prior-filed applications should not be construed as meaning that applicant is entitled to the claim for benefit of priority to the prior-filed applications noted thereon. Accordingly, the examiner will, in due course, consider this benefit claim and determine whether this application is entitled to the benefit of the earlier filing date.

A corrected Filing Receipt, which includes the priority claim to the prior-filed nonprovisional applications, has been mailed under separate cover.

Any inquiries concerning this decision may be directed to the undersigned at (571) 272-3218. All other inquiries concerning either the examination procedures or status of the application should be directed to the Technology Center.

This application is being forwarded to Technology Center Art Unit 1645 for consideration by the examiner of applicant's entitlement to claim benefit of priority under 35 U.S.C. § 120 to the prior-filed applications.

Frances Hicks
Petitions Examiner
Office of Petitions

UNITED STATES PATENT AND TRADEMARK OFFICE

Commissioner for Patents
United States Patent and Trademark Office
P.O. Box 1450
Alexandria, VA 22313-1450
www.uspto.gov

POLSTER, LIEDER, WOODRUFF & LUCCHESI
12412 POWERSCOURT DRIVE SUITE 200
ST. LOUIS, MO 63131-3615

COPY MAILED

MAR 0 4 2005

OFFICE OF PETITIONS

In re Application of	:	
Seth Harbuck	:	
Application No. 10/669,275	:	DECISION REFUSING STATUS
Filed: September 23, 2003	:	UNDER 37 CFR 1.47(b)
For: LOW COST FUEL PUMP AND FILTER	:	
ASSEMBLY	:	

This is in response to the petition under 37 CFR 1.47(b), filed January 28, 2005.

The petition is dismissed.

Rule 47 applicant is given TWO MONTHS from the mailing date of this decision to respond, correcting the below-noted deficiencies. Any response should be entitled "Request for Reconsideration of Petition Under 37 CFR 1.47(b)" and may include an oath or declaration executed by the inventor. Failure to respond will result in abandonment of the application. Any extensions of time will be governed by 37 CFR 1.136(a).

The above-identified application was filed on September 23, 2003 without an executed oath or declaration and naming Seth Harbuck as the sole inventors.

Accordingly, on September 28, 2004, a "Notice to File Missing Parts of Application" was mailed, requiring an executed oath or declaration and a surcharge for its late filing.

In response, on January 28, 2005, the instant petition and a two (2) month extension of time were filed.

A grantable petition under 37 CFR 1.47(b) requires:

(1) proof that the non-signing inventor cannot be reached or refuses to sign the oath or declaration;

(2) an acceptable oath or declaration;

(3) the petition fee;

(4) a statement of the last known address of the non-signing inventor;

(5) proof of proprietary interest; and

(6) proof of irreparable damage.

Applicant lacks item (1), as set forth above.

As to item (1), Rule 47 applicant failed to show or provide proof that the inventor has refused to sign the declaration or cannot be reached or located.

Before an inventor can refuse to sign an oath or declaration, he must have been presented with a copy of the application papers (specification, claims and drawings). Petitioner should show that a copy of the application papers was presented to the inventor, but that he did not respond to, or expressly refused, the request that he sign the oath/declaration in order to show that the inventor has refused to join in the application. The proof of the pertinent events should be made by a statement of someone with first hand knowledge of the events. *See* MPEP 409.03(d).

If the inventor cannot be reached or located, a copy of the application papers should be sent to the last known address of the non-signing inventor with a request that he sign the declaration for the patent application. A forwarding address should be requested if the papers are returned and if other diligent efforts and attempts to locate the inventor, e.g. through e-mail or the telephone, continue to fail, then applicant will have established that the inventor cannot be reached. *See* MPEP 409.03(d).

After this decision is mailed, deposit account No. 16-2201 will be charged the small entity two-month extension of time fee ($225.00), the fee for the petition under 37 CFR 1.47 ($200.00) and the surcharge for late oath or declaration ($65.00).

Further correspondence with respect to this matter should be addressed as follows:

By mail: Mail Stop Petition
Commissioner for Patents
Box 1450
Alexandria, VA 22313

By FAX: (703) 872-9306
Attn: Office of Petitions

By hand: Customer Service Window
Randolph Building
401 Dulany Street
Alexandria, VA 22314

Telephone inquiries should be directed to the undersigned at (571)272-3228.

Edward J. Tannouse
Petitions Attorney
Office of Petitions
United States Patent and Trademark Office

UNITED STATES PATENT AND TRADEMARK OFFICE

Commissioner for Patents
United States Patent and Trademark Office
P.O. Box 1450
Alexandria, VA 22313-1450
www.uspto.gov

POLSTER, LIEDER, WOODRUFF & LUCCHESI
12412 POWERSCOURT DRIVE SUITE 200
ST. LOUIS, MO 63131-3615

COPY MAILED

APR 12 2005

OFFICE OF PETITIONS

In re Application of	:	
E. Seth Harbuck	:	
Application No. 10/669,275	:	DECISION GRANTING PETITION
Filed: September 23, 2003	:	UNDER 37 CFR 1.47(b)
For: LOW COST FUEL PUMP AND FILTER	:	
ASSEMBLY	:	

This is in response to the "Request for Reconsideration of Petition Under 37 CFR 1.47(b)," filed March 23, 2005.

The petition is granted.

Petitioner has shown that the non-signing inventor has refused to join in the filing of the above-identified application after having been presented with the application papers. Specifically, the declaration of Nelson D. Nolte, and the email from Seth Harbuck, establish that the inventor was mailed the application papers, including the specification, claims and drawings, but refused the request that he sign the declaration. In addition, petitioner has shown that PCRC Products (PCRC) has a proprietary interest in the above-identified application with the copy of the assignment document. The petition fee has been paid. Lastly, petitioner has submitted a declaration in compliance with 37 CFR 1.63 and 1.64 and demonstrated that petitioner has shown that such action is necessary to prevent irreparable damage.

This application and papers have been reviewed and found in compliance with 37 CFR 1.47(b). This application is hereby accorded Rule 1.47(b) status.

As provided in Rule 1.47(b), this Office will forward notice of this application's filing to the non-signing inventor at the address given in the petition. Notice of the filing of this application will also be published in the Official Gazette.

The application will be forwarded to the Office of Initial Patent Examination for further processing.

Telephone inquiries regarding this communication should be directed to the undersigned at (571)272-3228.

Edward J. Tannouse
Petitions Attorney
Office of Petitions
United States Patent and Trademark Office

UNITED STATES PATENT AND TRADEMARK OFFICE

Commissioner for Patents
United States Patent and Trademark Office
P.O. Box 1450
Alexandria, VA 22313-1450
www.uspto.gov

E. SETH HARBUCK
104 CARROLLTON AVE.
SHREVEPORT, LA 71105

COPY MAILED

APR 12 2005

OFFICE OF PETITIONS

In re Application of
E. Seth Harbuck
Application No. 10/669,275
Filed: September 23, 2003
For: LOW COST FUEL PUMP AND FILTER ASSEMBLY

Dear E. SETH HARBUCK:

You are named as the sole inventor in the above identified United States patent application, filed under the provisions of 35 U.S.C. 118 (United States Code), and 37 CFR 1.47(b), Rules of Practice in Patent Cases. Should a patent be granted on the application you will be designated therein as the sole inventor.

As a named inventor you are entitled to inspect any paper in the file wrapper of the application, order copies of all or any part thereof (at a prepaid cost per 37 CFR 1.19) or make your position of record in the application. Alternatively, you may arrange to do any of the preceding through a registered patent attorney or agent presenting written authorization from you. If you care to join the application, counsel of record (see below) would presumably assist you. Joining in the application would entail the filing of an appropriate oath or declaration by you pursuant to 37 CFR 1.63.

Telephone inquiries regarding this communication should be directed to the undersigned at (571)272-3228. Requests for information regarding your application should be directed to the File Information Unit at (703)308-2733. Information regarding how to pay for and order a copy of the application, or a specific paper in the application, should be directed to Certification Division at (703)308-9726 or 1(800)972-6382 (outside the Washington D.C. area).

Edward J. Tannouse
Petitions Attorney
Office of Petitions
United States Patent and Trademark Office

POLSTER, LIEDER, WOODRUFF & LUCCHESI
12412 POWERSCOURT DRIVE SUITE 200
ST. LOUIS, MO 63131-3615

UNITED STATES PATENT AND TRADEMARK OFFICE

UNITED STATES DEPARTMENT OF COMMERCE
United States Patent and Trademark Office
Address: COMMISSIONER FOR PATENTS
P.O. Box 1450
Alexandria, Virginia 22313-1450
www.uspto.gov

3M INNOVATIVE PROPERTIES COMPANY
PO BOX 33427
ST. PAUL, MN 55133-3427

Mail Date: 04/20/2010

Applicant	: Stephen B. Roscoe	: DECISION ON REQUEST FOR
Patent Number	: 7635452	: RECALCULATION of PATENT
Issue Date	: 12/22/2009	: TERM ADJUSTMENT IN VIEW
Appliction No	: 10/669,276	: OF WYETH AND NOTICE OF INTENT TO
Filed	: 09/24/2003	: ISSUE CERTIFICATE OF CORRECTION
		:

The Request for Recalculation is **GRANTED** to the extent indicated.

The patent term adjustment has been determined to be **1675** days. The USPTO will *sua sponte* issue a certificate of correction reflecting the amount of PTA days determined by the recalculation.

Prior to the issuance of the certificate of correction, the USPTO will afford patentee an opportunity to be heard and request reconsideration. Accordingly, patentee has **one month or thirty (30) days**, whichever is longer, to file a request for reconsideration of this patent term adjustment calculation. See 35 U.S.C. 154(b)(3)(B)(ii) and 37 CFR 1.322(a)(4). No extensions of time will be granted under 37 CFR 1.136.

Patentee should use document code PET.OP if electronically filing a request for reconsideration of this patent term adjustment calculation. The patentee must also include the information required by 37 CFR 1.705(b)(2) and the fee required by 37 CFR 1.18(e). If patentee does not file a timely request for reconsideration of this patent term adjustment calculation including the information required by 37 CFR 1.705(b)(2) and the fee required by 37 CFR 1.18(e), the USPTO will issue a certificate of correction reflecting the PTA determination noted above.

Patentee should be aware that in order to preserve the right to review in the United States District Court for the District of Columbia of the USPTO patent term adjustment determination, patentee must ensure that he or she also take the steps required under 35 U.S.C. 154(b)(4)(A) in a timely manner. Nothing in the request for recalculation should be construed as providing an alternative time frame for commencing a civil action under 35 U.S.C. 154(b)(4)(A).

Any questions concerning this decision should be directed to the Office of Patent Legal Administration at 571-272-7702.

UNITED STATES PATENT AND TRADEMARK OFFICE

Commissioner for Patents
United States Patent and Trademark Office
P.O. Box 1450
Alexandria, VA 22313-1450
www.uspto.gov

JONES DAY
1420 PEACHTREE STREET, N.E.
SUITE 800
ATLANTA GA 30309-3053

MAILED

MAR 2 9 2010

OFFICE OF PETITIONS

In re Application :
Thomas R. Kroswek et al. :
Application No. 10/669,277 : DECISION ON APPLICATION
Filed: September 23, 2003 : FOR PATENT TERM ADJUSTMENT
Attorney Docket No. **687197615001** :

This is in response to the REQUEST FOR RECONSIDERATION OF PATENT TERM ADJUSTMENT UNDER 37 C.F.R. § 1.705(b) filed January 15, 2010. Applicant requests that the determination of patent term adjustment be corrected from 1291 days to 2035 days. Applicant requests this correction in part on the basis that the Office will take in excess of three years to issue this patent and in light of the recent court decision in Wyeth v. Kappos, No. 2009-1120 (Jan. 7, 2010).

As the instant application for patent term adjustment requests reconsideration of the patent term adjustment as it relates to the Office's failure to issue the patent within three years of the filing date, the application for patent term adjustment under 37 CFR 1.705(b) is **DISMISSED as PREMATURE**.

Knowledge of the actual date the patent issues is required to calculate the amount, if any, of additional patent term patentees are entitled to for Office failure to issue the patent within three years. See 37 CFR 1.702(b). (This is true even where a request for continued examination (RCE) was filed). The computer will not undertake the § 1.702(b) calculation until the actual date of issuance of the patent has been determined. Likewise, the computer will not calculate any further Office delay under 37 CFR 1.702(a)(4) or applicant delay under 37 CFR 1.704(c)(10) until the actual date of issuance of the patent has been determined. As such, the Office cannot make a determination on the patent term adjustment relating to those provisions until the patent has issued.

Requesting reconsideration of the patent term adjustment to be indicated on the patent under 37 CFR 1.705(b) based on the initial determination of patent term adjustment and a projected issuance date of the patent (or even the filing date of the request for

continued examination) is premature. Accordingly, it is appropriate to dismiss such a request as premature.

Rather than file an application for patent term adjustment under 37 CFR 1.705(b) contesting the 37 CFR 1.702(b) calculation at the time of the mailing of the notice of allowance, applicants are advised that they may wait until the time of the issuance of the patent and file a request for reconsideration of the patent term adjustment pursuant to 37 CFR 1.705(d). As the USPTO does not calculate the amount of time earned pursuant to 37 CFR 1.702(b) until the time of the issuance of the patent, the Office will consider any request for reconsideration of the patent term adjustment due to an error in the calculation of 37 CFR 1.702(b) to be timely if the request for reconsideration is filed within two months of the issuance of the patent. However, as to all other bases for contesting the initial determination of patent term adjustment received with the notice of allowance, applicants must timely file an application for patent term adjustment prior to the payment of the issue fee.[1]

Any request for reconsideration of the patent term adjustment indicated on the patent must be timely filed within two months after issuance pursuant to 37 CFR 1.705(d) and must include payment of the required fee under 37 CFR 1.18(e).

The Office of Data Management has been advised of this decision. This application is being referred to the Office of Data Management for issuance of the patent.

Telephone inquiries specific to this decision should be directed to Senior Petitions Attorney Patricia Faison-Ball at (571) 272-3212.

/Kery A. Fries/

Kery A. Fries
Senior Legal Advisor
Office of Patent Legal Administration
Office of Deputy Commissioner
for Examination Policy

---

[1] For example, if applicants dispute both the calculation of patent term adjustment under 37 CFR 1.702(a)(1) for Office failure to mail a first Office action or notice of allowance not later than fourteen months after the date on which the application was filed, and under 37 CFR 1.702(b) for Office failure to issue a patent within three years of the actual filing date of the application, then applicants must still timely file an application for patent term adjustment prior to the payment of the issue fee to contest the calculation of Office delay in issuing a first Office action or notice of allowance. See 37 CFR 1.705(b) and 35 U.S.C. 154(b)(3)(B). A dispute as to the calculation of the § 1.702(a)(1) period raised on request for reconsideration of patent term adjustment under 37 CFR 1.705(d) will be dismissed as untimely filed.

UNITED STATES PATENT AND TRADEMARK OFFICE

COMMISSIONER FOR PATENTS
UNITED STATES PATENT AND TRADEMARK OFFICE
P.O. BOX 1450
ALEXANDRIA, VA 22313-1450
www.uspto.gov

Cook, Alex, McFarron, Manzo,
Cummings & Mahler, LTD.
200 West Adams Street
Suit 2850
Chicago, IL 60606-5234

COPY MAILED
JUL 14 2004
OFFICE OF PETITIONS

In re Application of :
Mitsunori Sakama, et al. :
Application No. 10/669,284 : DECISION GRANTING
Filed: September 24, 2003 : PETITION
Attorney Docket No. 0553-0185.01 :

This is a decision on the petition filed April 22, 2004, under 37 CFR 1.182 requesting that the above-identified application be accepted as complete and accorded a filing date of September 24, 2003.

The petition is **granted**.

The instant application papers were filed on September 24, 2003. However, on February 22, 2004, the Office of Initial Patent Examination sent a Notice (of Omitted Items) stating that while a filing date had been granted, page 32 of the specification was missing.

In reply, a copy of page 32, a copy of an itemized postcard receipt for the above-identified provisional application papers bearing a USPTO date stamp of September 22, 2003, indicating the USPTO had received a specification including 56 pages, and the instant petition were filed on April 22, 2004. Petitioners assert, as shown by the postcard receipt, that the purportedly missing page 32 was in fact among the papers received by the USPTO on September 24, 2003.

Per MPEP 503, as an adequately itemized postcard receipt will serve as *prima facie* evidence of receipt of all items listed thereon, the petition is **granted**. The Notice of February 22, 2004, was mailed in error and is **vacated**. The error is regretted.

As no fee is owed due to the USPTO error, no petition fee has been charged.

The Office of Initial Patent Examination, Customer Corrections, is being instructed to further process this application as a complete nonprovisional application with an indication on the filing receipt that 56 pages of specification were present on filing, using the copy of the specification page 32 filed on April 22, 2004.

Telephone inquiries concerning this matter may be directed to Marianne Morgan at (703) 306-3475.

Brian Hearn

Brian Hearn
Senior Petitions Examiner
Office of Petitions
Office of the Deputy Commissioner
For Patent Examination Policy

UNITED STATES PATENT AND TRADEMARK OFFICE

Commissioner for Patents
United States Patent and Trademark Office
P.O. Box 1450
Alexandria, VA 22313-1450
www.uspto.gov

JORDAN AND HAMBURG LLP
122 EAST 42ND STREET
SUITE 4000
NEW YORK NY 10168

COPY MAILED

OCT 0 3 2005

OFFICE OF PETITIONS

In re Application of	:	
NAKAZAWA, Takashi et al.	:	DECISION
Application No.: 10/669,293	:	
Filing Date: September 24, 2003	:	ON PETITION UNDER
Docket No.: F-7961	:	
For: INHIBITOR SWITCH	:	37 CFR 1.137(b)

This is a decision on Petition Under 37 CFR 1.137(b), filed on June 13, 2005.

The petition is **GRANTED**.

The above-identified application became abandoned for failure to file a timely and proper reply to the non-final Office action mailed August 25, 2004, which set a shortened statutory period for reply of three (3) months. The application went abandoned at midnight on November 25, 2004. A Notice of Abandonment was mailed on June 14, 2005.

Petitioner has met the requirements for revival under §1.137(b). Petitioner submitted the reply in the form of an amendment, paid the petition fee and made the required statement of unintentional delay. Since this utility application was filed after June 8, 1995, no terminal disclaimer is required. Accordingly, the petition is granted under §1.137(b).

This application is being referred to Technology Center 2832 for continued processing.

Erin P. Thomson
Erin Thomson
Attorney Advisor
PCT Legal Administration

Telephone: 571-272-3292
Facsimile: 571-273-0459

Frances Hicks for
Brian Hearn
Petitions Examiner
Office of Petitions

UNITED STATES PATENT AND TRADEMARK OFFICE

COMMISSIONER FOR PATENTS
UNITED STATES PATENT AND TRADEMARK OFFICE
P.O. BOX 1450
ALEXANDRIA, VA 22313-1450
WWW.USPTO.GOV

Paper No. None

JORDAN AND HAMBURG LLP
122 EAST 42ND STREET
SUITE 4000
NEW YORK NY 10168

COPY MAILED
JUN 16 2006
OFFICE OF PETITIONS

In re Application of :
Takashi Nakazawa et al. :
Application No. 10/669,293 : DECISION ON PETITION
Filed: September 24, 2003 : UNDER 37 C.F.R. §1.137(b)
Attorney Docket Number: F-7961 :
Title: INHIBITOR SWITCH :

This is a decision on the petition, pursuant to 37 C.F.R. §1.137(b)[1], to revive the above-identified application, filed on February 2, 2006.

The above-identified application became abandoned for failure to submit the issue and publication fees in a timely manner in reply to the Notice of Allowance and Issue Fee Due, mailed October 20, 2005, which set a shortened statutory period for reply of three (3) months. No extensions of time are permitted for transmitting issue or publication fees[2]. Accordingly, the above-identified application became abandoned on January 21, 2006.

---

1 A grantable petition pursuant to 37 CFR 1.137(b) must be accompanied by:
(1) The reply required to the outstanding Office action or notice, unless previously filed;
(2) The petition fee as set forth in § 1.17(m);
(3) A statement that the entire delay in filing the required reply from the due date for the reply until the filing of a grantable petition pursuant to this paragraph was unintentional. The Commissioner may require additional information where there is a question whether the delay was unintentional, and;
(4) Any terminal disclaimer (and fee as set forth in § 1.20(d)) required pursuant to paragraph (d) of this section.

2 See MPEP §710.02(e).

With the present petition, Petitioner has submitted the petition fee, the publication fee, the issue fee, and the proper statement of unintentional delay.

As such, the petition is **GRANTED**.

After the mailing of this decision, the Office of Patent Publications will be notified of the same so that the present application can be processed into a patent.

The phone number for the Office of Patent Publication is (571) 272-4200. Telephone inquiries regarding this decision should be directed to the undersigned at (571) 272-3225.

Paul Shanoski
Senior Attorney
Office of Petitions
United States Patent and Trademark Office

UNITED STATES PATENT AND TRADEMARK OFFICE

COMMISSIONER FOR PATENT
UNITED STATES PATENT AND TRADEMARK OFFIC
WASHINGTON, D.C. 20231
www.uspto.go

Robert D. Fish
Rutan & Tucker, LLP
P.O. Box 1950
611 Anton Boulevard, 14th Floor
Costa Mesa, California 92628-1950

MAILED

JUN 0 2 2004

Technology Center 2100

In re Application of: Todd Miller et al. Application No. 10/669,312 Filed: September 25, 2003 For: METHOD AND SYSTEM FOR RETRIEVING SEARCH RESULTS FROM MULTIPLE DISPARATE DATABASES	)))))))	DECISION ON PETITION TO MAKE SPECIAL UNDER M.P.E.P. §708.02(II): INFRINGEMENT

This is a decision on the petition, filed February 13, 2004, requesting to make the above-identified application special under 37 C.F.R. §1.102(d) and M.P.E.P. §708.02(II): Infringement.

A grantable petition under 37 C.F.R. §1.102(d), and M.P.E.P. §708.02, Section II, must be accompanied by payment of the fee under 37 C.F.R.§1.117(h) and a statement under 37 C.F.R. §1.102 by the applicant or assignee or statements by an attorney/agent registered to practice before the Patent and Trademark Office that (A) there is an infringing device or product actually on the market or method in use; (B) a rigid comparison of the alleged infringing device, product, or method with the claims of the application has been made, and that, in his or her opinion, some of the claims are unquestionably infringed: and (C) he or she has made or caused to be made a careful and thorough search of the prior art or has a good knowledge of the prior art. Applicant must provide one copy of each of the references deemed most closely related to the subject matter encompassed by the claims.

Applicants' submission meets all the criteria set out above, accordingly, the Petition is **GRANTED**.

The application file is being forwarded to the Examiner of Record for expedited examination.

Pinchus M. Laufer
Special Programs Examiner
Technology Center 2100
Computer Architecture, Software, and Information Security
(703) 306-4160

UNITED STATES PATENT AND TRADEMARK OFFICE

COMMISSIONER FOR PATENTS
UNITED STATES PATENT AND TRADEMARK OFFICE
P.O. BOX 1450
ALEXANDRIA, VA 22313-1450
www.uspto.gov

MAIL

MAY 16 2005

DIRECTOR OFFICE
TECHNOLOGY CENTER 2100

MATTINGLY, STANGER, MALUR & BRUNDIDGE, P.C.
1800 DIAGONAL ROAD
SUITE 370
ALEXANDRIA VA 22314

In re Application of: Watanabe
Application No. 10/669,325
Filed: September 25, 2003
For: REMOTE COPY SYSTEM

DECISION ON PETITION
TO MAKE SPECIAL
(ACCELERATED EXAMINATION)
UNDER M.P.E.P. §708.02 (VIII)

This is a response to the petition filed 07 March 2005, under 37 C.F.R. §1.102(d) and M.P.E.P. §708.02 (VIII): Accelerated Examination, to make the above-identified application special.

The Petition is **DISMISSED**.

M.P.E.P. §708.02, Section VIII which sets out the prerequisites for a grantable petition for Accelerated Examination under 37 C.F.R. §1.102(d) states in relevant part:

A new application (one which has not received any examination by the examiner) may be granted special status provided that applicant (and this term includes applicant's attorney or agent) complies with each of the following items:

(a) Submits a petition to make special accompanied by the fee set forth in **37 CFR 1.17(h)**;

(b) Presents all claims directed to a single invention, or if the Office determines that all the claims presented are not obviously directed to a single invention, will make an election without traverse as a prerequisite to the grant of special status;

(c) Submits a statement(s) that a pre-examination search was made, listing the field of search by class and subclass, publication, Chemical Abstracts, foreign patents, etc. The pre-examination search must be directed to the invention as claimed in the application for which special status is requested. A search made by a foreign patent office satisfies this requirement;

(d) Submits one copy each of the references deemed most closely related to the subject matter encompassed by the claims if said references are not already of record; and

(e) Submits a detailed discussion of the references, which discussion points out, with the particularity required by 37 CFR 1.111 (b) and (c), how the claimed subject matter is patentable over the references.

In those instances where the request for this special status does not meet all the prerequisites set forth above, **applicant will be notified and the defects in the request will be stated.** The application will remain in the status of a new

application awaiting action in its regular turn. In those instances where a request is defective in one or more respects, applicant will be given one opportunity to perfect the request in a renewed petition to make special. If perfected, the request will then be granted. If not perfected in the first renewed petition, any additional renewed petitions to make special may or may not be considered at the discretion of the Technology Center (TC) Special Program Examiner.

The petition filed 07 March 2005 fails to adequately meet requirement (e) of the criteria set forth above. The discussion of the references does not point out with the particularity required by 37 CFR 1.111(b) and (c) how the claimed subject matter is patentable over the references. The discussion fails to specifically point out how the language of claim 11 patentably distinguishes it from the references. At least some of the features purported to be in claim 11 do not appear in that claim. For example, claim 11 does not specify "transmit[ting] to the *third storage unit system* a journal including write data and an address of the write data" (emphasis added) or "a function of the *second controller* . . ." (emphasis added). Also, regarding the discussion of the Nakano reference, claim 11 does not specify sending the journal "to the *third storage unit* from the first storage unit" (emphasis added) or acquiring "the journal from the *third storage unit*" (emphasis added).

Petition to Make Special **DISMISSED**.

Petitioner is given one opportunity to perfect the petition. Any request for reconsideration must be filed within TWO MONTHS of the mail date of this decision.

Until the renewed petition is submitted, the application will be returned to the examiner's docket to await treatment on the merits in the normal order of examination.

Pinchus M. Laufer

Pinchus M. Laufer
Special Program Examiner
Technology Center 2100
Computer Architecture, Software and Information Security
571-272-3599

ds

UNITED STATES PATENT AND TRADEMARK OFFICE

COMMISSIONER FOR PATENTS
UNITED STATES PATENT AND TRADEMARK OFFICE
P.O. BOX 1450
ALEXANDRIA, VA 22313-1450
www.uspto.gov

MAILED
AUG 23 2005
Technology Center 2100

MATTINGLY, STANGER, MALUR & BRUNDIDGE, P.C.
1800 DIAGONAL ROAD
SUITE 370
ALEXANDRIA VA 22314

In re Application of: Watanabe
Application No. 10/669,325
Filed: September 25, 2003
For: REMOTE COPY SYSTEM

DECISION ON PETITION
TO MAKE SPECIAL
(ACCELERATED EXAMINATION)
UNDER M.P.E.P. §708.02 (VIII)

This is a response to the renewed petition filed 12 July 2005, under 37 C.F.R. §1.102(d) and M.P.E.P. §708.02 (VIII): Accelerated Examination, to make the above-identified application special. The renewed petition was filed in response to a dismissal of the original petition filed 07 March 2005.

The Petition is **DENIED**.

M.P.E.P. §708.02, Section VIII which sets out the prerequisites for a grantable petition for Accelerated Examination under 37 C.F.R. §1.102(d) states in relevant part:

A new application (one which has not received any examination by the examiner) may be granted special status provided that applicant (and this term includes applicant's attorney or agent) complies with each of the following items:

. . .

(e) Submits a detailed discussion of the references, which discussion points out, with the particularity required by 37 CFR 1.111 (b) and (c), how the claimed subject matter is patentable over the references.

The original petition was dismissed for failing to meet requirement (e).

The renewed petition filed 12 July 2005 also fails to adequately meet requirement (e) of the criteria set forth above. The discussion of the references does not point out with the particularity required by 37 CFR 1.111(b) and (c) how the claimed subject matter is patentable over the references. The renewed petition identifies a first and second feature of independent claim 1 and a third and fourth feature of independent claim 11. However, in identifying these features, the discussion states that the references "fail to disclose or suggest [the identified features] *in combination* with the other limitations recited in the claims" (emphasis added). It is also stated in the discussion of each reference that the reference "does not disclose or suggest" the identified features for each

independent claim "*in combination* with the other limitations recited in each of the independent claims" (emphasis added). In effect, this statement indicates that the *entirety* of the two independent claims is not disclosed by the references purported to be most closely related. Such a statement is not a sufficient detailed description.

Petition to Make Special **DENIED**.

The application will be returned to the examiner's docket to await treatment on the merits in the normal order of examination.

Pinchus M. Laufer
Special Program Examiner
Technology Center 2100
Computer Architecture, Software and Information Security
571-272-3599

ds

UNITED STATES PATENT AND TRADEMARK OFFICE

COMMISSIONER FOR PATENTS
UNITED STATES PATENT AND TRADEMARK OFFICE
P.O. BOX 1450
ALEXANDRIA, VA 22313-1450
www.uspto.gov

MATTINGLY, STANGER, MALUR & BRUNDIDGE, P.C.
1800 DIAGONAL ROAD
SUITE 370
ALEXANDRIA VA 22314

MAILED

DEC 30 2005

TECHNOLOGY CENTER 2100

In re Application of: Watanabe
Application No. 10/669,325
Filed: September 25, 2003
For: REMOTE COPY SYSTEM

DECISION ON PETITION
UNDER 37 CFR §1.181 FOR
SUPERVISORY REVIEW

This is a response to the "PETITION TO DIRECTOR UNDER 37 CFR §1.181 OF DENIAL OF PETITION TO MAKE SPECIAL" filed 24 October 2005, under 37 C.F.R. §1.102(d) and M.P.E.P. §708.02 (VIII): Accelerated Examination, to make the above-identified application special.

On 16 May 2005, a decision was mailed dismissing the original petition filed 07 March 2005.

On 23 August 2005, a decision was mailed denying the renewed petition filed 12 July 2005.

The Petition is **DENIED**.

M.P.E.P. §708.02, Section VIII which sets out the prerequisites for a grantable petition for Accelerated Examination under 37 C.F.R. §1.102(d) states in relevant part:

A new application (one which has not received any examination by the examiner) may be granted special status provided that applicant (and this term includes applicant's attorney or agent) complies with each of the following items:

. . .

(d) Submits one copy each of the references deemed most closely related to the subject matter encompassed by the claims if said references are not already of record; and

(e) Submits a detailed discussion of the references, which discussion points out, with the particularity required by 37 CFR 1.111 (b) and (c), how the claimed subject matter is patentable over the references.

The petition filed 07 March 2005 was dismissed in a decision mailed 16 May 2005 for failing to adequately meet requirement (e) of the criteria set forth above. It was noted that the discussion of the references failed to point out with the particularity required by 37 CFR 1.111(b) and (c) how the claimed subject matter is patentable over the references. Specifically, it was noted that

> [t]he discussion fails to specifically point out how the language of claim 11 patentably distinguishes it from the references. At least some of the features purported to be in claim 11 do not appear in that claim. For example, claim 11 does not specify "transmit[ting] to the *third storage unit system* a journal including write data and an address of the write data" (emphasis added) or "a function of the *second controller* . . ." (emphasis added). Also, regarding the discussion of the Nakano reference, claim 11 does not specify sending the journal "to the *third storage unit* from the first storage unit" (emphasis added) or acquiring "the journal from the *third storage unit*" (emphasis added).

The petition filed 12 July 2005 was denied in a decision mailed 23 August 2005 for failing to adequately meet requirement (e) of the criteria set forth above. It was noted that the discussion of the references failed to point out with the particularity required by 37 CFR 1.111(b) and (c) how the claimed subject matter is patentable over the references. Specifically, it was noted that

> [t]he renewed petition identifies a first and second feature of independent claim 1 and a third and fourth feature of independent claim 11. However, in identifying these features, the discussion states that the references "fail to disclose or suggest [the identified features] *in combination* with the other limitations recited in the claims" (emphasis added). It is also stated in the discussion of each reference that the reference "does not disclose or suggest" the identified features for each independent claim "*in combination* with the other limitations recited in each of the independent claims" (emphasis added). In effect, this statement indicates that the *entirety* of the two independent claims is not disclosed by the references purported to be most closely related. Such a statement is not a sufficient detailed description.

The discussion regarding claim 11 in the decision mailed 16 May 2005 is not disputed.

Regarding the decision mailed 23 August 2005, it is urged that "arguing that specific features in combination with other limitations of the claims renders the claims patentable over the references is highly appropriate and satisfies the requirements of 37 CFR §1.102(b)." While such an argument may be appropriate to distinguish the claims from the references in regard to obviousness, it is not appropriate to distinguish the claims from the references in regard to anticipation. As noted in the decision mailed 23 August 2005, the statement attempting to distinguish the claims from the references in effect states that the entirety of the independent claim is not disclosed by the reference. A statement that the entirety of each independent claim is not disclosed by the references purported to be "most closely related" is not a sufficient detailed description as to anticipation. The petitions fail to point out which particular feature or features are not shown by the references such that the claims are not anticipated. I.e., regarding anticipation, stating that the references fail to show the claim in its entirety is simply a general allegation that does not comply with the requirements of 37 CFR 1.111(b) and (c).

Accordingly, Applicant has not met the criteria for the granting of a Petition for accelerated examination. The petition is **DENIED**.

The application will be returned to the examiner's docket to await treatment on the merits in the normal order of examination.

Jack Harvey for

Paul Sewell, Group Director
Technology Center 2100
Computer Architecture, Software and Information Security
571-272-1400

UNITED STATES PATENT AND TRADEMARK OFFICE

COMMISSIONER FOR PATENTS
UNITED STATES PATENT AND TRADEMARK OFFICE
P.O. BOX 1450
ALEXANDRIA, VA 22313-1450
www.uspto.gov

CHIH-WEI CHEN
P.O. BOX 697
FENG-YUAN CITY
TAICHUNG HSIEN 420 TAIWAN
AIR MAIL

COPY MAILED
FEB 24 2006
OFFICE OF PETITIONS

In re Application of	:	
Chen et al.	:	
Application No. 10/669,341	:	DECISION ON PETITION
Filed: September 25, 2003	:	
Title: Slidable Windshield Wiper For	:	
Automobiles	:	

This is a decision on the petition under 37 CFR 1.181, filed October 28, 2005, and resubmitted on November 1, 2005, requesting that the Office withdraw the holding of abandonment in the above-identified application.

On March 21, 2005, the Office mailed a final Office action, which set a three (3) month shortened statutory period for reply. In response, on June 10, 2005, applicants filed a continuation application under 37 CFR 1.62[1] ("FWC") based on the above-identified application with a preliminary amendment and paid a $500.00 filing fee. Despite the filing of the reply, the Office mailed a Notice of Abandonment on October 4, 2005.

The Office notes that the filing of the application under former 37 CFR 1.62 was improper because the above-identified application was filed on or after December 1, 1997. In the event that an applicant files a request for a FWC of a utility or plant application that was filed on or after May 29, 2000, the Office will automatically treat the improper FWC as a request for continued examination of the prior application ("RCE") under 37 CFR 1.114. See MPEP 201.06(b), 706.07(h).

A review of the record indicates that the Office received the timely response to the final Office action on June 10, 2005; however, the Office did not treat the improper FWC as a request for a RCE pursuant to Section 201.06(b) of the MPEP. Rather, the Office mailed a Notice of Abandonment, which indicated that applicants failed to file a proper and timely reply to the final Office action of March 21, 2005.

[1] 37 CFR 1.62 was deleted from Title 37 of the Code of Federal Regulation effective December 1, 1997. See Notice of Final Rule, 62 Fed. Reg. 53132 (October 10, 1997).

The Office is treating the improper FWC, filed on June 10, 2005, as a timely response to the final Office action in the form of a request for a RCE. The preliminary amendment submitted on June 10, 2005, is an appropriate submission under 37 CFR 1.114. Accordingly, the petition is **granted**. The Notice of Abandonment was sent in error and is hereby withdrawn.

The Office finance records indicate that applicants paid a $500.00 fee for the filing of the FWC. However, applicants are only required to pay a $395.00 RCE fee. Accordingly, applicants will be refunded the balance of $105.00 by treasury check.

This matter will be referred to Technology Center Art Unit 1744 for processing of the RCE and the submission in response to the final Office action of March 21, 2005.

Telephone inquiries concerning this matter may be directed to the undersigned at (571) 272-3211. All other questions regarding the status of the application or the examination process should be directed to the Technology Center.

Christina Tartera Donnell

Christina Tartera Donnell
Senior Petitions Attorney
Office of Petitions

UNITED STATES PATENT AND TRADEMARK OFFICE

COMMISSIONER FOR PATENTS
UNITED STATES PATENT AND TRADEMARK OFFICE
P.O. BOX 1450
ALEXANDRIA, VA 22313-1450
www.uspto.gov

BIRCH STEWART KOLASCH & BIRCH
PO BOX 747
FALLS CHURCH, VA 22040-0747

COPY MAILED

SEP 13 2006

OFFICE OF PETITIONS

ON PETITION

In re Application of	:
Jong Dam Kim, et al.	:
Application No. 10/669,348	:
Filed: September 25, 2003	:
Attorney Docket No.: 2658-0310P	:

This is a decision on the petition, filed September 5, 2006, under 37 CFR 1.313(c)(2) to withdraw the above-identified application from issue after payment of the issue fee.

The petition is **GRANTED**.

The above-identified application is withdrawn from issue for consideration of a submission under 37 CFR 1.114 (request for continued examination). See 37 CFR 1.313(c)(2).

Petitioner is advised that the issue fee paid on July 3, 2006, in the above-identified application cannot be refunded. If, however, the above-identified application is again allowed, petitioner may request that it be applied towards the issue fee required by the new Notice of Allowance. [1]

Telephone inquiries relating to this decision should be directed to the undersigned at (571) 272-3204.

The application is being referred to Technology Center AU 2829 for further processing of the request for continued examination under 37 CFR 1.114.

Sherry D. Brinkley
Petitions Examiner
Office of Petitions

[1]The request to apply the issue fee to the new Notice may be satisfied by completing and returning the new Issue Fee Transmittal Form PTOL-85(b), which includes the following language thereon: "Commissioner for Patents is requested to apply the Issue Fee and Publication Fee (if any) or re-apply any previously paid issue fee to the application identified above." Petitioner is advised that, whether a fee is indicated as being due or not, the Issue Fee Transmittal Form **must** be completed and timely submitted to avoid abandonment. Note the language in bold text on the first page of the Notice of Allowance and Fee(s) Due (PTOL-85).

UNITED STATES PATENT AND TRADEMARK OFFICE

Commissioner for Patents
United States Patent and Trademark Office
P.O. Box 1450
Alexandria, VA 22313-1450
www.uspto.gov

BIRCH STEWART KOLASCH & BIRCH
P O BOX 747
FALLS CHURCH, VA 22040-0747

COPY MAILED

APR 19 2007

OFFICE OF PETITIONS

In re Application of	:
Jong Dam Kim et al	:
Application No. 10/669,348	: DECISION GRANTING PETITION
Filed: September 25, 2003	: UNDER 37 CFR 1.313(c)(2)
Attorney Docket No. 2658-0310P	:

This is a decision on the petition, filed April 18, 2007, under 37 CFR 1.313(c)(2) to withdraw the above-identified application from issue after payment of the issue fee.

The petition is **GRANTED**.

The above-identified application is withdrawn from issue for consideration of a submission under 37 CFR 1.114 (request for continued examination). See 37 CFR 1.313(c)(2).

Petitioner is advised that the issue fee paid on March 13, 2007 in the above-identified application cannot be refunded. If, however, the above-identified application is again allowed, petitioner may request that it be applied towards the issue fee required by the new Notice of Allowance.[1]

Telephone inquiries should be directed to the undersigned at (571) 272-3218.

This matter is being referred to Technology Center AU 2829 for processing of the request for continued examination under 37 CFR 1.114 and for consideration of the Information Disclosure Statement.

Frances Hicks
Petitions Examiner
Office of Petitions

C:\Documents and Settings\FHicks\My Documents\470\Apr10\669348.wpd

---

[1] *The request to apply the issue fee to the new Notice may be satisfied by completing and returning the new Part B – Fee(s) Transmittal Form (along with any balance due at the time of submission). Petitioner is advised that the Issue Fee Transmittal Form must be completed and timely submitted to avoid abandonment.*

UNITED STATES PATENT AND TRADEMARK OFFICE

Commissioner for Patents
United States Patent and Trademark Office
P.O. Box 1450
Alexandria, VA 22313-1450
www.uspto.gov

Mr. Frank Doran
L3 Communications Aviation Recorders
6000 Fruitville Road
Sarasota, FL 34232

COPY MAILED
JAN 30 2006
OFFICE OF PETITIONS

In re Application of	:	
Margaret Browning, et. al.	:	
Application No. 10/669,385	:	ON PETITION
Filed: September 24, 2003	:	
Attorney Docket No. L3-007	:	

This is a decision on the petition under 37 CFR 1.137(b), filed December 29, 2005, to revive the above-identified application.

The application became abandoned for failure to reply to the non-final Office action mailed July 6, 2004. A Notice of Abandonment was mailed on January 26, 2005.

It is not apparent whether the statement of unintentional delay was signed by a person who would have been in a position of knowing that the entire delay in filing the required reply from the due date for the reply until the filing of a grantable petition pursuant to 37 CFR 1.137(b) was unintentional. Nevertheless, in accordance with 37 CFR 10.18, the statement is accepted as constituting a certification of unintentional delay. However, in the event that petitioner has no knowledge that the delay was unintentional, petitioner must make such an inquiry to ascertain that, in fact, the delay was unintentional. If petitioner discovers that the delay was intentional, petitioner must so notify the Office.

There is no indication that the person signing the instant petition was ever given a power of attorney or authorization of agent to prosecute the above-identified application. In accordance with 37 CFR 1.34(a), the signature appearing on the petition shall constitute a representation to the United States Patent and Trademark Office that he/she is authorized to represent the particular party in whose behalf he/she acts. However, if petitioner desires to receive future correspondence regarding this application, the appropriate power of attorney or authorization of agent must be submitted. A courtesy copy of this decision is being mailed to petitioner. Nevertheless, all future correspondence regarding this application file will be directed solely to the address of record until otherwise instructed.

The petition satisfies the requirements of 37 CFR 1.137(b) in that petitioner has supplied (1) the reply in the form of an amendment; (2) the petition fee of $1,500; and (3) an adequate statement of unintentional delay. Therefore, the petition is **GRANTED**.

The Office acknowledges receipt of an Information Disclosure Statement (IDS) and Terminal Disclaimer with the $130 filing fee, filed on December 29, 2005.

The application file is being referred to Technology Center Art Unit 2831, for review of the amendment filed with the instant petition.

Telephone inquiries concerning this decision should be directed to the undersigned at (571) 272-3226.

Andrea Smith
Petitions Examiner
Office of Petitions

cc: Richard P. Stitt
120 W. 12th Street
Kansas City, MO 64105

UNITED STATES PATENT AND TRADEMARK OFFICE

COMMISSIONER FOR PATENTS
UNITED STATES PATENT AND TRADEMARK OFFICE
P.O. BOX 1450
ALEXANDRIA, VA 22313-1450
www.uspto.gov

PANDUIT CORP.
LEGAL DEPARTMENT - TP12
17301 SOUTH RIDGELAND AVENUE
TINLEY PARK IL 60477

COPY MAILED

MAR 0 8 2004

OFFICE OF PETITIONS

In re Application of
Sokol, Kossak & Keller
Application No. 10/669,391
Filed: September 24, 2003
Attorney Docket No.LCB417
For: MULTI-TAP COMPRESSION CONNECTOR

: DECISION ACCORDING STATUS
: UNDER 37 CFR 1.47(a)

This is in response to the petition under 37 CFR 1.47(a), filed January 2, 2004 (certificate of mailing date December 29, 2003).

The petition is granted.

Petitioners have shown that the non-signing inventor, Brian Keller, has constructively refused to join in the filing of the above-identified application after having been presented with the application papers. Specifically, the statement of facts of Robert A. McCann, Assistant Secretary of Panduit Corp. and attorney for the other two joint inventors, establishes that the inventor was successfully mailed the application papers, including the specification, claims and drawings, but failed to respond to the request that he sign the declaration. Petitioners have submitted a declaration in compliance with 37 CFR 1.63 and 1.64.

This application and papers have been reviewed and found in compliance with 37 CFR 1.47(a). This application is hereby accorded Rule 1.47(a) status.

As provided in Rule 1.47(c), this Office will forward notice of this application's filing to the non-signing inventor at the address given in the petition. Notice of the filing of this application will also be published in the Official Gazette.

After this decision is mailed, the above-identified application will be forwarded to Technology Center 2800 for examination in due course.

Telephone inquiries should be directed to the undersigned at (703) 308-6712.

E. Shirene Willis

E. Shirene Willis
Senior Petitions Attorney
Office of Petitions

UNITED STATES PATENT AND TRADEMARK OFFICE

COMMISSIONER FOR PATENTS
UNITED STATES PATENT AND TRADEMARK OFFICE
P.O. BOX 1450
ALEXANDRIA, VA 22313-1450
www.uspto.gov

BRIAN KELLER
2904 LEVAN AVENUE
NEW LENOX, IL 60451

COPY MAILED

MAR 0 8 2004

OFFICE OF PETITIONS

In re Application of
Sokol, Kossak & Keller
Application No. 10/669,391
Filed: September 24, 2003
Attorney Docket No. LCB417
For: MULTI-TAP COMPRESSION CONNECTOR

LETTER

Dear Mr. Keller:

You are named as a joint inventor in the above identified United States patent application, filed under the provisions of 35 U.S.C. 116 (United States Code), and 37 CFR 1.47(a), Rules of Practice in Patent Cases. Should a patent be granted on the application you will be designated therein as a joint inventor.

As a named inventor you are entitled to inspect any paper in the file wrapper of the application, order copies of all or any part thereof (at a prepaid cost per 37 CFR 1.19) or make your position of record in the application. Alternatively, you may arrange to do any of the preceding through a registered patent attorney or agent presenting written authorization from you. If you care to join the application, counsel of record (see below) would presumably assist you. Joining in the application would entail the filing of an appropriate oath or declaration by you pursuant to 37 CFR 1.63.

Requests for information regarding your application should be directed to the File Information Unit at (703)308-2733. Information regarding how to pay for and order a copy of the application, or a specific paper in the application, should be directed to Certification Division at (703)308-9726 or 1(800)972-6382 (outside the Washington D.C. area).

Telephone inquiries regarding this communication should be directed to the undersigned at (703) 308-6712.

E. Shirene Willis
Senior Petitions Attorney
Office of Petitions

ATTORNEY OF RECORD: PANDUIT CORP.
LEGAL DEPARTMENT - TP12
17301 SOUTH RIDGELAND AVENUE
TINLEY PARK IL 60477

UNITED STATES PATENT AND TRADEMARK OFFICE

UNITED STATES DEPARTMENT OF COMMERCE
United States Patent and Trademark Office
Address: COMMISSIONER FOR PATENTS
P.O. Box 1450
Alexandria, Virginia 22313-1450
www.uspto.gov

IBM CORPORATION
3039 CORNWALLIS RD.
DEPT. T81 / B503, PO BOX 12195
RESEARCH TRIANGLE PARK, NC 27709

Mail Date: 04/20/2010

Applicant	: Christopher Lawrence Brealey	: DECISION ON REQUEST FOR
Patent Number	: 7644412	: RECALCULATION of PATENT
Issue Date	: 01/05/2010	: TERM ADJUSTMENT IN VIEW
Appliction No	: 10/669,396	: OF WYETH AND NOTICE OF INTENT TO
Filed	: 09/23/2003	: ISSUE CERTIFICATE OF CORRECTION
		:

The Request for Recalculation is **GRANTED** to the extent indicated.

The patent term adjustment has been determined to be **1869** days. The USPTO will *sua sponte* issue a certificate of correction reflecting the amount of PTA days determined by the recalculation.

Prior to the issuance of the certificate of correction, the USPTO will afford patentee an opportunity to be heard and request reconsideration. Accordingly, patentee has **one month or thirty (30) days**, whichever is longer, to file a request for reconsideration of this patent term adjustment calculation. See 35 U.S.C. 154(b)(3)(B)(ii) and 37 CFR 1.322(a)(4). No extensions of time will be granted under 37 CFR 1.136.

Patentee should use document code PET.OP if electronically filing a request for reconsideration of this patent term adjustment calculation. The patentee must also include the information required by 37 CFR 1.705(b)(2) and the fee required by 37 CFR 1.18(e). If patentee does not file a timely request for reconsideration of this patent term adjustment calculation including the information required by 37 CFR 1.705(b)(2) and the fee required by 37 CFR 1.18(e), the USPTO will issue a certificate of correction reflecting the PTA determination noted above.

Patentee should be aware that in order to preserve the right to review in the United States District Court for the District of Columbia of the USPTO patent term adjustment determination, patentee must ensure that he or she also take the steps required under 35 U.S.C. 154(b)(4)(A) in a timely manner. Nothing in the request for recalculation should be construed as providing an alternative time frame for commencing a civil action under 35 U.S.C. 154(b)(4)(A).

Any questions concerning this decision should be directed to the Office of Patent Legal Administration at 571-272-7702.

UNITED STATES PATENT AND TRADEMARK OFFICE

Commissioner for Patents
United States Patent and Trademark Office
P.O. Box 1450
Alexandria, VA 22313-1450
www.uspto.gov

JAN 15 2005

In re Application of	:	
Eli Pine	:	DECISION ON PETITION
Application No. 10/669,406	:	
Filed: September 25, 2003	:	
For: X-Y-Z Drawer Organizer	:	

This is a decision on the petition to make special filed on September 25, 2003. The petition is based upon the practice described in MPEP § 708.02(IV) "Applicant's Age." Therefore, no petition fee is required.

The petition is granted.

The petition to make special based upon the practice in the above mentioned MPEP section is deemed to satisfy all of the requirements thereof. Specifically, the application contains a statement that co-inventor Eli Pine is age 65 or older.

Accordingly, the examiner will treat this application as special throughout its prosecution. Prior to the first action on the merits, the examiner will conduct a rigorous search for potentially interfering applications. The interference search will be brought up to date prior to each successive action.

The Supervisory Patent Examiner of Patent Examining Art Unit 3727 is being informed of this decision, and will advise the examiner to take future action consistent therewith.

PETITION GRANTED.

Stephen Marcus, Special Program Examiner
Technology Center 3700

Gayle Rosenberg
c/o GSL Enterprises
Suite 2
Harmon Cove Towers
Secaucus, NJ 07094

UNITED STATES PATENT AND TRADEMARK OFFICE

Commissioner for Patents
United States Patent and Trademark Office
P.O. Box 1450
Alexandria, VA 22313-1450
www.uspto.gov

Eric Bleicken
6301 S. Westshore Blvd.
Apt. 1020
Tampa FL 33616-1364

COPY MAILED

AUG 23 2005

OFFICE OF PETITIONS

In re Application of :
Eric Bleicken :
Application No. 10/669,407 : ON PETITION
Filed: September 25, 2003 :
Title: Bow-Facing Rowing System

This is a decision on the petition under 37 CFR 1.137(b), filed August 3, 2005, to revive the above-identified application.

This petition is hereby **Dismissed**.

Any request for reconsideration must be submitted within TWO (2) MONTHS from the mail date of this decision. Extensions of time under 37 CFR 1.136(a) are permitted. The reconsideration request should include a cover letter entitled "Renewed Petition under 37 CFR 1.137(b)." This is **not** final agency action within the meaning of 5 U.S.C. §704.

This above-identified application became abandoned for failure to timely file a complete reply to the non-final Office Action of June 15, 2004. A Notice of Non-Compliant Amendment (37 CFR 1.121) was mailed on October 12, 2004 which set an extendable reply period of one month. A reply was received on November 12, 2004. On February 23, 2005 a second Notice of Non-Compliant Amendment (37 CFR 1.121) was mailed. An untimely response was received on April 11, 2005. This application became abandoned on November 13, 2004. A Notice of Abandonment was mailed on July 22, 2005.

The merits of the petition have not been reviewed. The payment of a petition fee to obtain the revival of an abandoned application is a statutory prerequisite to revival of the abandoned application. The current petition fee is $750.00. Petitioner has submitted $100. Accordingly petitioner will need to submit the $650.00 difference.

Further Correspondence with respect to this matter should be addressed as follows:

By mail:	Mail Stop Petition Commissioner for Patents P.O. Box 1450 Alexandria, VA 22313-1450
By facsimile:	(571) 273-8300
By delivery service: (FedEx, UPS, DHL, etc.)	U.S. Patent and Trademark Office Customer Service Window, Mail Stop Petition Randolph Building 401 Dulany Street Alexandria, VA 22314

Telephone inquiries concerning this matter should be directed to the undersigned at (571) 272-3215.

Charlema R. Grant

Charlema R. Grant
Petitions Attorney
Office of Petitions

UNITED STATES PATENT AND TRADEMARK OFFICE

Commissioner for Patents
United States Patent and Trademark Office
P.O. Box 1450
Alexandria, VA 22313-1450
www.uspto.gov

Eric Bleicken
6301 S. Westshore Blvd.
Apt. 1020
Tampa FL 33616-1364

COPY MAILED

JAN 1 3 2006

OFFICE OF PETITIONS

In re Application of
Eric Bleicken
Application No. 10/669,407
Filed: September 25, 2003
Title: Bow-Facing Rowing System

ON PETITION

This is a decision on the petition filed September 29, 2005, under 37 CFR 1.137(a) to revive the above-identified application.

The petition to revive under 37 CFR § 1.137(a) is **DISMISSED**.
The petition to revive under 37 CFR § 1.137(b) is **DISMISSED**.

Any request for reconsideration must be submitted within TWO (2) MONTHS from the mail date of this decision. Extensions of time under 37 CFR § 1.136(a) are permitted. The reconsideration request should include a cover letter entitled "Renewed Petition under 37 CFR § 1.137(a)." This is **not** a final agency action within the meaning of 5 U.S.C. § 704.

This above-identified application became abandoned for failure to timely file a complete reply to the non-final Office Action of June 15, 2004. A Notice of Non-Compliant Amendment (37 CFR 1.121) was mailed on October 12, 2004 which set an extendable reply period of one month. A reply was received on November 12, 2004. On February 23, 2005 a second Notice of Non-Compliant Amendment (37 CFR 1.121) was mailed. An untimely response was received on April 11, 2005. This application became abandoned on November 13, 2004. A Notice of Abandonment was mailed on July 22, 2005. A petition filed under 37 CFR 1.137(b) was dismissed on August 23, 2005.

Petitioner asserts that his failure to file certain documents in a timely manner resulted from his reliance on alleged inaccurate information provided by USPTO personnel and a USPTO notice that was not received. Specifically petitioner contends he did not receive the February 23, 2005 Notice of Non-Compliant Amendment. Petitioner insist that he spoke to Examiner Avila before mailing his reply to the Office action (received April 7, 2005). After the reply was received petitioner alleges that Examiner Avila stated "the claims looked good and the patent process should be complete in a couple of weeks".

PETITION TO REVIVE UNDER 37 CFR § 1.137(a)

A grantable petition under 37 CFR § 1.137(a) must be accompanied by:
(1) the required reply,[1]
(2) the petition fee,
(3) a showing to the satisfaction of the Director that the entire delay in filing the required reply from the due date for the reply until the filing of a grantable petition pursuant to this paragraph was unavoidable, and
(4) a terminal disclaimer and fee if the application was filed on or before June 8, 1995 or if the application is a design application.

The instant petition lacks item (3).

As to item (3), the showing of record is not sufficient to establish to the satisfaction of the Director that the delay was unavoidable within the meaning of 37 CFR §1.137(a).

The Office may revive an abandoned application if the delay in responding to the relevant outstanding office requirement is shown to the satisfaction of the Commissioner to have been "unavoidable." See, 37 CFR § 1.137(a)(3). Decisions on reviving abandoned applications have adopted the reasonably prudent person standard in determining if the delay was unavoidable. Ex parte Pratt, 1887 Dec. Comm'r Pat. 31, 32-33 (Comm'r Pat. 1887) (the term "unavoidable" is applicable to ordinary human affairs, and requires no more greater care or diligence than is generally used and observed by prudent and careful men in relation to their most important business."); In re Mattullath, 38 App. D.C. 497, 514-15 (D.C. Cir. 1912); Ex parte Henrich, 1913 Dec. Comm'r Pat. 139, 141 (Comm'r Pat. 1913). In addition, decisions on revival are made on a "case by case basis, taking all the facts and circumstances into account." Smith v. Mossinghoff, 671 F.2d 533, 538, 213 USPQ 977, 982 (D.C. Cir. 1982). A petition to revive an application as unavoidably abandoned cannot be granted where petitioner has failed to meet his or her burden of establishing the cause of the unavoidable delay. Haines v. Quigg, 673 F. Supp. 314, 5 USPQ2D 1130 (N.D. Ind. 1987).

The showing of record is inadequate to establish unavoidable delay within the meaning of 35 U.S.C. § 133 and 37 CFR 1.137(a).[2] Specifically, an application is "unavoidably" abandoned only where petitioner, or counsel for petitioner, takes all action necessary for a proper response to the outstanding Office action, but through the intervention of unforeseen circumstances, such as failure of mail, telegraph, facsimile, or the negligence of otherwise reliable employees, the response is not timely received in the Office.[3]

Petitioner's arguments have been considered but they are not persuasive. Petitioner's contention that the delay was unavoidable due to receipt of inaccurate information and failure to receive an Office Communication is not convincing to establish unavoidable delay. A delay caused by an applicant's lack of knowledge or improper application of the patent statute, rules of practice or the MPEP is not rendered "unavoidable" due to: (A) the applicant's reliance upon oral advice from USPTO employees; or (B) the USPTO's failure to advise the applicant of any deficiency in sufficient time to permit the applicant to take corrective action. See In re Sivertz, 227 USPQ 255, 256 (Comm'r Pat. 1985).

Petitioner states that he did not receive the February 23, 2005 second Notice of Non-

---

[1] In a nonprovisional application abandoned for failure to prosecute, the required reply may be met by the filing of a continuing application. In an application or patent, abandoned or lapsed for failure to pay the issue fee or any portion thereof, the required reply must be the payment of the issue fee or any outstanding balance thereof.

[2] See MPEP 711(c)(III)(c)(2) for a discussion of the requirements for a showing of unavoidable delay.

[3] Ex parte Pratt, 1887 Dec. Comm'r Pat. 31 (Comm'r Pat. 1887).

Compliant Amendment. However, the facts would indicate that petitioner did receive the second Notice, because he purportedly responded to the Notice with the untimely amendment submitted on April 11, 2005. The second Notice of Non-Compliant Amendment clearly stated that the application would be abandoned unless petitioner corrected the deficiency **and** obtained an extension of time under 37 CFR 1.136 (a). Petitioner's April 11, 2005 response was filed without a request for extension of time and the requisite fee. Accordingly, the application was abandoned.

To the extent the Notice of Non-Compliant Amendment was not received petitioner has failed to provide any evidence. A review of the record indicates no irregularity in the mailing of the Notice, and in the absence of any irregularity in the mailing, there is a strong presumption that the Office action was properly mailed to the address of record. This presumption may be overcome by a showing that the Notice was not in fact received. The showing required to establish the failure to receive an Office communication must include a statement from the practitioner stating that the Office communication was not received by the practitioner and attesting to the fact that a search of the file jacket and docket records indicates that the Office communication was not received. A copy of the docket record where the non-received Office communication would have been entered had it been received and docketed must be attached to and referenced in practitioner's statement.[4] The showing outlined above may not be sufficient if there are circumstances that point to a conclusion that the Notice of Non-Compliant Amendment may have been lost after receipt rather than a conclusion that the Notice of Non-Compliant Amendment was lost in the mail.

Where applicant is pro se applicant should demonstrate what system is in place upon receipt of communication from the USPTO. If applicant retains documents in a central location, makes use of a computer program or calendar such information as well as any accompanying evidence should be provided on renewed petition. A pro se applicant must state that the file was searched and that the communication in question has not been located. The Office is looking for applicant to make a showing that the communication was not lost after receipt.

Accordingly, petitioner has failed to provide any facts or evidence that warrant a finding of unavoidable delay.

It should also be noted that all correspondence should reference application **10/669,407** and not 10/669,093.

PETITION TO REVIVE UNDER 37 CFR 1.137 (b)

A grantable petition pursuant to 37 CFR 1.137(b) must be accompanied by:
(1) the required reply, unless previously filed;
(2) the petition fee as set forth in 37 CFR 1.17(m);
(3) a statement that "the entire delay in filing the required reply from the due date for the reply until the filing of a grantable petition pursuant to 37 CFR 1.137(b) was unintentional"; and
(4) any terminal disclaimer (and fee as set forth in 37 CFR 1.20(d)) required by 37 CFR 1.137(c).

Petitioner has failed to provide the petition fee in the amount of $750.00. The Office is in receipt of the $500.00. Petitioner needs to supply an additional $250.00.

Further correspondence with respect to this matter should be addressed as follows:

---

[4] M.P.E.P. § 711.03(c); See Notice entitled "Withdrawing the Holding of Abandonment When Office Actions Are Not Received," 1156 O.G. 53 (November 16, 1993).

By mail:	Mail Stop Petition Commissioner for Patents P.O. Box 1450 Alexandria, VA 22313-1450
By facsimile:	(571) 273-8300
By delivery service: (FedEx, UPS, DHL, etc.)	U.S. Patent and Trademark Office Randolph Building 401 Dulany Street Alexandria, VA 22314

Telephone inquiries should be directed to the undersigned at (571) 272-3215.

Charlema R. Grant

Charlema R. Grant
Petitions Attorney
Office of Petitions

UNITED STATES PATENT AND TRADEMARK OFFICE

Commissioner for Patents
United States Patent and Trademark Office
P.O. Box 1450
Alexandria, VA 22313-1450
www.uspto.gov

Eric Bleicken
6301 S. Westshore Blvd.
Apt. 1020
Tampa FL 33616-1364

COPY MAILED

FEB 28 2006

OFFICE OF PETITIONS

In re Application of :
Eric Bleicken :
Application No. 10/669,407 : ON PETITION
Filed: September 25, 2003 :
Title: Bow-Facing Rowing System

This is a decision on the renewed petition under 37 CFR 1.137(b), filed January 23, 2006, to revive the above-identified application.

This above-identified application became abandoned for failure to timely file a complete reply to the non-final Office Action of June 15, 2004. A Notice of Non-Compliant Amendment (37 CFR 1.121) was mailed on October 12, 2004 which set an extendable reply period of one month. A reply was received on November 12, 2004. On February 23, 2005 a second Notice of Non-Compliant Amendment (37 CFR 1.121) was mailed. An untimely response was received on April 11, 2005. This application became abandoned on November 13, 2004. A Notice of Abandonment was mailed on July 22, 2005. A petition to revive under 37 CFR 1.137 was dismissed on January 13, 2006.

This petition is hereby **Granted**.

This application is being forwarded to Technology Center 3600 for further processing.

Telephone inquiries concerning this matter should be directed to the undersigned at (571) 272-3215.

Charlema R. Grant

Charlema R. Grant
Petitions Attorney
Office of Petitions

SPE RESPONSE FOR CERTIFICATE OF CORRECTION

Paper No.:20080226

DATE : December 14, 2007

TO SPE OF : ART UNIT 1655

SUBJECT : Request for Certificate of Correction on Patent No.: 7,205,006

A response is requested with respect to the accompanying request for a certificate of correction.

Please complete this form and return with file, within **7** days to:
Certificates of Correction Branch - ST (South Tower) 9A22
Palm location **7590** - Tel. No. (703) 305-8309

With respect to the change(s) requested, correcting Office and/or Applicant's errors, should the patent read as shown in the certificate of correction? No new matter should be introduced, nor should the scope or meaning of the claims be changed.

Thank You For Your Assistance **Certificates of Correction Branch**

The request for issuing the above-identified correction(s) is hereby:

Note your decision on the appropriated box.

☒ **Approved** All changes apply.

☐ **Approved in Part** Specify below which changes **do not** apply.

☐ **Denied** State the reasons for denial below.

Comments:

The patent should read as shown in the certificate of correction because this error was inserted at the time of publication of the patent. The insertion of the period after the capital "C" was not ever present in the claim. The period after the first appearing capital "C" in claim 1 only became apparent at the time of publication of the patent.

SPE: /Terry McKelvey/ Art Unit 1655

UNITED STATES PATENT AND TRADEMARK OFFICE

Commissioner for Patents
United States Patent and Trademark Office
P.O. Box 1450
Alexandria, VA 22313-1450
www.uspto.gov

Steven S. Payne
8027 ILIFF Drive
Dunn Loring VA 22027

COPY MAILED

MAR 27 2009

OFFICE OF PETITIONS

In re Application of

Jaroslav Sranka :

Application No. 10/669,418

: DECISION ON PETITION

Filed: September 25, 2003

:

Attorney Docket No. 150-129

This is a decision on the petition under 37 CFR 1.137(b), filed February 27, 2009, to revive the above-identified application.

The petition is **GRANTED**.

The above-cited application became abandoned for failure to reply in a timely manner to the non-final Office action mailed November 3, 2006, which set a shortened statutory period for reply of three (3) months from its mailing date. No extension of time pursuant to 37 CFR 1.136(a) was obtained within the allowable period. Accordingly, the application became abandoned on February 4, 2007.

The amendment filed February 27, 2009, is noted.

The application is being forwarded to Technology Center 3600, GAU 3679 for further processing.

Telephone inquiries concerning this decision should be directed to the undersigned at (571) 272-3222.

Kenya A. McLaughlin
Petitions Attorney
Office of Petitions

SPE RESPONSE FOR CERTIFICATE OF CORRECTION

Paper No.: _____

DATE : 4-13-06

TO SPE OF : ART UNIT 2834

SUBJECT : Request for Certificate of Correction for Appl. No. 10/669429 Patent No.: 6885132

Please respond to this request for a certificate of correction within 7 days.

Please review the requested changes/corrections as shown in the **COCIN** document(s) in the IFW application image. No new matter should be introduced, nor should the scope or meaning of the claims be changed.

Please complete the response (see below) and forward the completed response to scanning using document code **COCX**.

Please check cols.

Certificates of Correction Branch

703-308-9390 ext. _____

Thank You For Your Assistance

The request for issuing the above-identified correction(s) is hereby:

Note your decision on the appropriate box.

- ☒ **Approved** — All changes apply.
- ☐ **Approved in Part** — Specify below which changes do not apply.
- ☐ **Denied** — State the reasons for denial below.

Comments: _____

SPE

2834

Art Unit

UNITED STATES PATENT AND TRADEMARK OFFICE

Commissioner for Patents
United States Patent and Trademark Office
P.O. Box 1450
Alexandria, VA 22313-1450
www.uspto.gov

DON D. CHA
17225 W. 12TH AVE.
GOLDEN, CO 80401

COPY MAILED

JUN 13 2007

OFFICE OF PETITIONS

In re Application of	:	
Leland Shapiro	:	
Application No. 10/669,441	:	DECISION GRANTING PETITION
Filed: September 25, 2003	:	UNDER 37 CFR 1.137(b)
Attorney Docket No. 7049792001	:	

This is a decision on the petition under 37 CFR 1.137(b), filed February 6, 2007, to revive the above-identified application.

The petition is **GRANTED**.

The petition satisfies the conditions for revival pursuant to the provisions of 37 CFR 1.137(b) in that (1) the reply in the form of Sequence Listing; (2) the petition fee; and (3) the required statement of unintentional delay have been received. Accordingly, the reply to the Notice of June 9, 2006, is accepted as having been unintentionally delayed.

Telephone inquiries concerning this decision should be directed to the undersigned at (571) 272-3208.

This matter is being referred to the Office of Initial Patent Examination.

Karen Creasy

Karen Creasy
Petitions Examiner
Office of Petitions

UNITED STATES PATENT AND TRADEMARK OFFICE

UNITED STATES DEPARTMENT OF COMMERCE
United States Patent and Trademark Office
Address: COMMISSIONER FOR PATENTS
P.O. Box 1450
Alexandria, Virginia 22313-1450
www.uspto.gov

MERIT MEDICAL SYSTEMS, INC.
C/O STOEL RIVES, LLP
ONE UTAH CENTER
201 SOUTH MAIN STREET -- SUITE 1100
SALT LAKE CITY, UT 84111

Mail Date: 04/21/2010

Applicant	: Eric K. Mangiardi	: DECISION ON REQUEST FOR
Patent Number	: 7637942	: RECALCULATION of PATENT
Issue Date	: 12/29/2009	: TERM ADJUSTMENT IN VIEW
Appliction No	: 10/669,450	: OF WYETH AND NOTICE OF INTENT TO
Filed	: 09/24/2003	: ISSUE CERTIFICATE OF CORRECTION
		:

The Request for Recalculation is **GRANTED** to the extent indicated.

The patent term adjustment has been determined to be **536** days. The USPTO will *sua sponte* issue a certificate of correction reflecting the amount of PTA days determined by the recalculation.

Prior to the issuance of the certificate of correction, the USPTO will afford patentee an opportunity to be heard and request reconsideration. Accordingly, patentee has **one month or thirty (30) days**, whichever is longer, to file a request for reconsideration of this patent term adjustment calculation. See 35 U.S.C. 154(b)(3)(B)(ii) and 37 CFR 1.322(a)(4). No extensions of time will be granted under 37 CFR 1.136.

Patentee should use document code PET.OP if electronically filing a request for reconsideration of this patent term adjustment calculation. The patentee must also include the information required by 37 CFR 1.705(b)(2) and the fee required by 37 CFR 1.18(e). If patentee does not file a timely request for reconsideration of this patent term adjustment calculation including the information required by 37 CFR 1.705(b)(2) and the fee required by 37 CFR 1.18(e), the USPTO will issue a certificate of correction reflecting the PTA determination noted above.

Patentee should be aware that in order to preserve the right to review in the United States District Court for the District of Columbia of the USPTO patent term adjustment determination, patentee must ensure that he or she also take the steps required under 35 U.S.C. 154(b)(4)(A) in a timely manner. Nothing in the request for recalculation should be construed as providing an alternative time frame for commencing a civil action under 35 U.S.C. 154(b)(4)(A).

Any questions concerning this decision should be directed to the Office of Patent Legal Administration at 571-272-7702.

UNITED STATES PATENT AND TRADEMARK OFFICE

Commissioner for Patents
United States Patent and Trademark Office
P.O. Box 1450
Alexandria, VA 22313-1450
www.uspto.gov

09162004

FITZPATRICK, CELLA, HARPER & SCINTO
30 ROCKEFELLER PLAZA
NEW YORK, NY 10112

OCT - 8 2004

In re Application of:
Hiroki Hayashi et al.
Serial No.: 10/669,456
Filed: September 25, 2003
For: INK TANK

DECISION ON PETITION

This is a decision on the petition under 37 C.F.R. § 1.181, filed September 7, 2004, to re-mail the non-final Office action of April 7, 2004 and restart the period for response thereto.

The petition is GRANTED.

A non-final Office action was mailed on April 7, 2004 setting a three-month shortened statutory period for reply.

Petitioner asserts that the Office action was defective because, although the cover sheet correctly identifies the instant application, the body of the Office action referred to a different application (serial number 10/358,875). After discovering the noted defect, petitioner spoke to the examiners in charge of the instant application and the '875 application on May 13, 2004. Petitioner was promised that corrective action would be taken within the same bi-week and the period for response would be restarted. To date, a corrected Office action has not been received. It is also asserted that upon checking the application status on September 3, 2004, it was learned that the USPTO has apparently corrected the internal records and switched actions between the two applications without informing the petitioner. For these reasons, petitioner requests that the Office action be re-mailed and the period for response re-started.

A review of the file record indicates that the Office action is defective as asserted by the petitioner. Accordingly, a response by the petitioner is not necessary or required. The Office action mailed April 7, 2004 is hereby vacated.

The delay in taking prompt appropriate corrective actions and any inconvenience to petitioner due to the Office error and delay is regretted.

A corrected Office action will be mailed promptly and a shortened statutory period will be set to run three months from the date the action is mailed. Extensions of this time are governed by 37 C.F.R. § 1.136(a).

Any inquiry regarding this decision should be directed to Hien H. Phan, Special Program Examiner, at (571) 272-1606.

Howard N. Goldberg, Group Director
Technology Center 2800
Semiconductors, Electrical and Optical
Systems and Components

UNITED STATES PATENT AND TRADEMARK OFFICE

COMMISSIONER FOR PATENTS
UNITED STATES PATENT AND TRADEMARK OFFICE
P.O. BOX 1450
ALEXANDRIA, VA 22313-1450
WWW.USPTO.GOV

Paper No.

BUCHANAN, INGERSOLL & ROONEY PC
POST OFFICE BOX 1404
ALEXANDRIA VA 22313-1404

COPY MAILED

SEP 25 2007

OFFICE OF PETITIONS

In re Application of Gou Shinohara et al. Application No. 10/669,470 Filed: September 25, 2003 Attorney Docket No. 1018995-000738 Title: AGENT FOR IMPROVING BONE METABOLISM	DECISION ON PETITION UNDER 37 C.F.R. § 1.181(A)

This is a decision on the petition under 37 C.F.R. § 1.181(a) to withdraw the holding of abandonment, filed on July 20, 2007.

BACKGROUND

The above-identified application became abandoned for failure to reply in a timely manner to the non-final Office action, mailed November 20, 2006, which set a shortened statutory period for reply of three months. No response was received, and no extensions of time under the provisions of 37 C.F.R. § 1.136(a) were requested. Accordingly, the above-identified application became abandoned on February 21, 2007. A notice of abandonment was mailed on July 5, 2007.

With the present petition, Petitioner has alleged that the mailing was not received, and has included a copy of the docket report.

CONCLUSION

Petitioner has met the requirements of Delgar v. Schulyer, 172 USPQ 513 (D.D.C. 1971), in that he has asserted that the mailing was not received, that he has searched the file jacket and the docket report, and he has included a copy of the latter.

Considering the facts and circumstances of the delay at issue, as set forth on petition, it is concluded that Petitioner has met his burden of establishing that the mailing was not received.

Accordingly, the petition under 37 C.F.R. §1.181(a) is **GRANTED**. The holding of abandonment is **WITHDRAWN**.

The Technology Center will be notified of this decision. The Technology Center's support staff will re-mail the non-final action of November 20, 2006, and will set a new period for response.

Telephone inquiries regarding this decision should be directed to the undersigned at (571) 272-3225. All other inquiries concerning examination procedures or status of the application should be directed to the Technology Center.

Paul Shanoski
Senior Attorney
Office of Petitions
United States Patent and Trademark Office

UNITED STATES PATENT AND TRADEMARK OFFICE

Commissioner for Patents
United States Patent and Trademark Office
P.O. Box 1450
Alexandria, VA 22313-1450
www.uspto.gov

COPY MAILED

AUG 18 2005

OFFICE OF PETITIONS

BIRCH STEWART KOLASCH & BIRCH
PO BOX 747
FALLS CHURCH, VA 22040-0747

In re Application of	:	
Kouji Yokouchui	:	
Application No. 10/669,471	:	DECISION GRANTING PETITION
Filed: September 25, 2003	:	
Attorney Docket No. 2091-0292P	:	

This is a decision on the petition filed June 13, 2005, requesting that the above-identified application be accorded a filing date of September 25, 2003.

On September 25, 2003, the above-identified application was filed. On May 12, 2005, the Office of Initial Patent Examination mailed a "Notice of Incomplete Nonprovisional Application" (the "Notice"), stating that the application had not been accorded a filing date because the specification filed did not contain at least one claim. The Notice also indicated that pages 19-35 of the specification were omitted and that neither an abstract nor an oath or declaration was found with the original application papers. The Notice allowed a non-extendable period for reply of two months from its mailing date.

In response, on June 13, 2005, applicants filed the present petition and a copy of an Office date-stamped postcard showing that, among other items, thirty-five pages of the specification, including claims and abstract, were received on September 25, 2003. The postcard also acknowledged receipt of the declaration on September 25, 2003.

Upon review of the record, neither the claims, pages 19-35 of the specification, the abstract, or the declaration were located among the application papers. However, the evidence is convincing that the application papers deposited September 25, 2003, included the claims, pages 19-35 of the specification, the abstract, and the declaration, which were subsequently misplaced by the Office. Therefore, the application, the claims, pages 19-35 of the specification, the abstract, or the declaration was complete on filing and entitled to a filing date of September 25, 2003.

Accordingly, the petition is granted; the Notice is vacated, accordingly.

The application file is being returned to the Office of Initial Patent Examination for further processing with a filing date of September 25, 2003, including the claims, pages 19-35 of the specification, the abstract, and the declaration.

Any inquiries related to this decision should be directed to the undersigned at (571) 272-3222.

Kenya A. McLaughlin

Kenya A. McLaughlin
Petitions Attorney
Office of Petitions

UNITED STATES PATENT AND TRADEMARK OFFICE

Commissioner for Patents
United States Patent and Trademark Office
P.O. Box 1450
Alexandria, VA 22313-1450
www.uspto.gov

Donald F. Haas
Shell Oil Company
Legal - Intellectual Property
P.O. Box 2463
Houston TX 77252-2463

COPY MAILED

MAR 3 1 2005

OFFICE OF PETITIONS

In re Application of	:
Powell, et al.	:DECISION ON PETITIONS
Application No. 10/669,485	:UNDER 37 CFR 1.78(a)(3)
Filed: September 24, 2003	:AND 37 CFR 1.78(a)(6)
Attorney Docket No. TH1276 02 (US)	:

This is a decision on the petition under 37 CFR §§ 1.78(a)(3) and 1.78(a)(6), filed October 22, 2004, to accept an unintentionally delayed claim under 35 U.S.C. §§ 120 and 119(e) for the benefit of the prior-filed nonprovisional and provisional applications set forth in the concurrently filed amendment.

The petition is **DISMISSED AS MOOT**.

A petition under 37 CFR §§ 1. 78(a)(3) and 1.78(a)(6) is only applicable to those applications filed on or after November 29, 2000.

Along with the instant petition under 37 CFR §§ 1.78(a)(3) and 1.76(a)(6), petitioner has submitted an amendment to the first sentence of the specification following the title to include a reference to the prior-filed applications.

The instant pending nonprovisional application was filed on September 24, 2003, and was pending at the time of filing of the instant petition. While a reference to the prior-filed applications was not included in an ADS or in the first sentence of the specification following the title, reference nevertheless was made in the transmittal letter filed with the above-identified application.

The current procedure where a claim for priority under 37 CFR §§ 1.78(a)(3) and 1.78(a)(6) is not included in the first sentence of the specification or in an ADS but does appear either in the oath or declaration or a transmittal letter filed with the application and the Office notes the claim for priority, no petition will be required to accept a late claim for priority. This is because the application would have been scheduled for publication on the basis of the information concerning the claim submitted elsewhere in the application within the time period set forth in 37 CFR §§

1.78(a)(2)(ii) and 1.78(a)(5)(ii). However, on the other hand, if the USPTO does not note the claim for priority to the prior-filed applications set forth in the oath or declaration or transmittal letter submitted with the application, a petition will be required to accept a late claim for priority under 37 CFR §§ 1.78(a)(3) and 1.78(a)(6).[1] In the instant case, the Office noted the claim for priority of the prior-filed applications in the transmittal letter filed with the application, as shown by their inclusion on the filing receipt, mailed December 18, 2003.

In view of the above, the $130.00 petition fee submitted is unnecessary and will be refunded to petitioner's deposit account in due course.

Any questions concerning this decision on petition may be directed to Petitions Attorney E. Shirene Willis at (571) 272-3230. All other inquiries concerning either the examination procedures or status of the application should be directed to the Technology Center.

This application is being forwarded to the Examiner in Technology Center AU 1621 for appropriate action on the amendment filed October 22, 2004, including consideration of the claim under 35 U.S.C. § 120 and 37 CFR 1.78(a)(2) and the claim under 35 U.S.C. § 119(e) and 37 CFR 1.78(a)(5) for benefit of the prior-filed applications.

Frances Hicks

Frances Hicks
Lead Petitions Examiner
Office of Petitions
Office of the Deputy Commissioner
for Patent Examination Policy

---

[1] *Note* MPEP 201.11 (III)(D), pages 200-59 and 200-60 (Rev. 2. May 2004) and 66 Federal Register 67087 at 67089 (Dec. 28, 2001), effective December 28, 2001.

UNITED STATES PATENT AND TRADEMARK OFFICE

Commissioner for Patents
United States Patent and Trademark Office
P.O. Box 1450
Alexandria, VA 22313-1450
www.uspto.gov

COPY MAILED

SEP 25 2007

OFFICE OF PETITIONS

TOWNSEND AND TOWNSEND AND CREW LLP
TWO EMBARCADERO CENTER
8TH FLOOR
SAN FRANCISCO, CA 94111-3834

In re Patent No. 7,027,933	:	
Issue Date: April 11, 2006	:	
Application No. 10/669,499	:	NOTICE
Filed: September 23, 2003	:	
Attorney Docket No. 026693-006211US	:	

This is a notice regarding your request for acceptance of a fee deficiency submission under 37 CFR 1.28. On September 1, 1998, the Court of Appeals for the Federal Circuit held that 37 CFR 1.28(c) is the sole provision governing the time for correction of the erroneous payment of the issue fee as a small entity. **See DH Technology v. Synergystex International, Inc. 154 F.3d 1333, 47 USPQ2d 1865 (Fed. Cir. Sept. 1, 1998).**

The Office no longer investigates or rejects original or reissue applications under 37 CFR 1.56. **1098 Off. Gaz. Pat. Office 502 (January 3, 1989)**. Therefore, nothing in this Notice is intended to imply that an investigation was done.

Your fee deficiency submission under 37 CFR 1.28 is hereby **ACCEPTED**.

This application is no longer entitled to small entity status. Accordingly, all future fees paid in this application must be paid at the large entity rate.

Inquiries related to this communication should be directed to the undersigned at (571) 272-3222.

Kenya A. McLaughlin
Petitions Attorney
Office of Petitions

SPE RESPONSE FOR CERTIFICATE OF CORRECTION

Paper No.: _____

DATE : 01/06/07

TO SPE OF : ART UNIT 2852

SUBJECT : Request for Certificate of Correction for Appl. No.: **10/669505** Patent No.: **6980755**

Please respond to this request for a certificate of correction within 7 days.

Please review the requested changes/corrections as shown in the **COCIN** document(s) in the IFW application image. No new matter should be introduced, nor should the scope or meaning of the claims be changed.

Please complete the response (see below) and forward the completed response to scanning using document code **COCX**.

Angela Green
Certificates of Correction Branch
703.308.9380 ext. 183

Thank You For Your Assistance

The request for issuing the above-identified correction(s) is hereby:
Note your decision on the appropriate box.

- ☑ **Approved** — **All** changes apply.
- ☐ **Approved in Part** — Specify below which changes **do not** apply.
- ☐ **Denied** — State the reasons for denial below.

Comments: Approved
J. G.

DAVID M. GRAY
SUPERVISORY PATENT EXAMINER

SPE

2852
Art Unit

Staple Here Only!

PRINTER'S TRIM LINE

UNITED STATES PATENT AND TRADEMARK OFFICE

CERTIFICATE OF CORRECTION

PATENT NO. : 6,980,755 B1

DATED : December 27, 2005

INVENTOR(S) : Atsushi NUMAGAMI ET AL.

It is certified that error appears in the above-identified patent and that said Letters Patent is hereby corrected as shown below:

ON THE COVER PAGE AT (30), Foreign Application Priority Data:
"2002/285469" should read --2002-285469--.
Below "Sep. 30, 2002 (JP).....2002/285469", insert
--Sep. 26, 2003 (JP).....2003-334758--.

COLUMN 5:
Line 38, "rotatcd" should read --rotated--.

COLUMN 10:
Line 29, "4eb" should read --4eB--.

COLUMN 17:
Line 39, "guided" should read --guided by--.

COLUMN 25:
Line 13, "direction" should read --direction opposite to the direction--.
Line 14, "enturety" should read --entirety--.
Line 19, "remanufacure" should read --remanufacture--.

MAILING ADDRESS OF SENDER:
FITZPATRICK, CELLA, HARPER & SCINTO
30 Rockefeller Plaza
New York, New York 10112-3800
(212) 218-2100 - Telephone
(212) 218-2200 - Facsimile

PATENT NO. 6,980,755 B1

No. of add'l copies
@ 30¢ per page

Form PTO 1050 (Rev. 3-82)
GMJ:ayr 235770 v1

UNITED STATES PATENT AND TRADEMARK OFFICE

UNITED STATES DEPARTMENT OF COMMERCE
United States Patent and Trademark Office
Address: COMMISSIONER FOR PATENTS
P.O. Box 1450
Alexandria, Virginia 22313-1450
www.uspto.gov

STAAS & HALSEY LLP
SUITE 700
1201 NEW YORK AVENUE, N.W.
WASHINGTON, DC 20005

Mail Date: 04/21/2010

Applicant	: Toshihiro Azami	: DECISION ON REQUEST FOR
Patent Number	: 7633487	: RECALCULATION of PATENT
Issue Date	: 12/15/2009	: TERM ADJUSTMENT IN VIEW
Appliction No	: 10/669,508	: OF WYETH AND NOTICE OF INTENT TO
Filed	: 09/25/2003	: ISSUE CERTIFICATE OF CORRECTION
		:

The Request for Recalculation is **GRANTED** to the extent indicated.

The patent term adjustment has been determined to be **1220** days. The USPTO will *sua sponte* issue a certificate of correction reflecting the amount of PTA days determined by the recalculation.

Prior to the issuance of the certificate of correction, the USPTO will afford patentee an opportunity to be heard and request reconsideration. Accordingly, patentee has **one month or thirty (30) days**, whichever is longer, to file a request for reconsideration of this patent term adjustment calculation. See 35 U.S.C. 154(b)(3)(B)(ii) and 37 CFR 1.322(a)(4). No extensions of time will be granted under 37 CFR 1.136.

Patentee should use document code PET.OP if electronically filing a request for reconsideration of this patent term adjustment calculation. The patentee must also include the information required by 37 CFR 1.705(b)(2) and the fee required by 37 CFR 1.18(e). If patentee does not file a timely request for reconsideration of this patent term adjustment calculation including the information required by 37 CFR 1.705(b)(2) and the fee required by 37 CFR 1.18(e), the USPTO will issue a certificate of correction reflecting the PTA determination noted above.

Patentee should be aware that in order to preserve the right to review in the United States District Court for the District of Columbia of the USPTO patent term adjustment determination, patentee must ensure that he or she also take the steps required under 35 U.S.C. 154(b)(4)(A) in a timely manner. Nothing in the request for recalculation should be construed as providing an alternative time frame for commencing a civil action under 35 U.S.C. 154(b)(4)(A).

Any questions concerning this decision should be directed to the Office of Patent Legal Administration at 571-272-7702.

UNITED STATES PATENT AND TRADEMARK OFFICE

COMMISSIONER FOR PATENTS
UNITED STATES PATENT AND TRADEMARK OFFICE
P.O. BOX 1450
ALEXANDRIA, VA 22313-1450
www.uspto.gov

COPY MAILED

MAY 24 2007

OFFICE OF PETITIONS

LAW OFFICE OF ALAN W. CANNON
942 MESA OAK COURT
SUNNYVALE, CA 94086

In re Application of Lawrence W. Hu, et al. Application No. 10/669,524 Filed: September 23, 2003 Attorney Docket No. GUID-010CON2	: : : : :	ON PETITION

This is a decision on the petition under 37 CFR 1.137(b) to revive the above-identified application, filed January 8, 2007.

The petition is **GRANTED**.

The application became abandoned for failure to pay the issue fee on or before November 24, 2006. A Notice of Abandonment was mailed on December 26, 2006. On January 8, 2007, the present petition was filed.

The petition satisfies the requirements of 37 CFR 1.137(b) in that petitioner has supplied (1) the reply in the form of the $1,400 issue fee and the $300 publication fee; (2) the petition fee of $1,500; and (3) an adequate statement of unintentional delay.

The application is being referred to the Office of Publications to be processed into a patent.

Telephone inquires related to this decision should be directed to the undersigned at (571) 272-3204. Telephone inquiries related to processing at Publishing Division should be directed to (571) 272-4200.

Sherry D. Brinkley
Petitions Examiner
Office of Petitions

UNITED STATES PATENT AND TRADEMARK OFFICE

Commissioner for Patents
United States Patent and Trademark Office
P.O. Box 1450
Alexandria, VA 22313-1450
www.uspto.gov

OLIFF & BERRIDGE PLC
P O BOX 19928
ALEXANDRIA, VA 22320

COPY MAILED
SEP 0 7 2006
OFFICE OF PETITIONS

In re Application of
Yoshiyuki Okazaki et al
Application No. 10/669,551
Filed: September 25, 2003
Attorney Docket No. 117209

DECISION GRANTING PETITION
UNDER 37 CFR 1.313(c)(2)

This is a decision on the petition, filed September 6, 2006, under 37 CFR 1.313(c)(2) to withdraw the above-identified application from issue after payment of the issue fee.

The petition is **GRANTED**.

The above-identified application is withdrawn from issue for consideration of a submission under 37 CFR 1.114 (request for continued examination). See 37 CFR 1.313(c)(2).

Petitioner is advised that the issue fee paid on July 24, 2006 in the above-identified application cannot be refunded. If, however, the above-identified application is again allowed, petitioner may request that it be applied towards the issue fee required by the new Notice of Allowance.[1]

Telephone inquiries should be directed to the undersigned at (571) 272-3218.

This matter is being referred to Technology Center AU 3765 for processing of the request for continued examination under 37 CFR 1.114 and for consideration of the Information Disclosure Statement.

Frances Hicks
Petitions Examiner
Office of Petitions

C:\Documents and Settings\FHicks\My Documents\470\Sept9\669551.wpd

---

[1] *The request to apply the issue fee to the new Notice may be satisfied by completing and returning the new Part B – Fee(s) Transmittal Form (along with any balance due at the time of submission). Petitioner is advised that the Issue Fee Transmittal Form must be completed and timely submitted to avoid abandonment.*

UNITED STATES PATENT AND TRADEMARK OFFICE

COMMISSIONER FOR PATENTS
UNITED STATES PATENT AND TRADEMARK OFFICE
P.O. BOX 1450
ALEXANDRIA, VA 22313-1450
www.uspto.gov

OBLON, SPIVAK, MCCLELLAND, MAIER & NEUSTADT, P.C.
1940 DUKE STREET
ALEXANDRIA, VA 22314

COPY MAILED

OCT 1 2 2005

OFFICE OF PETITIONS

In re Application of
Yukitaka Hori, et al.
Application No. 10/669,558
Filed: September 24, 2003
Attorney Docket No.: 243197US2

ON PETITION

This is a decision on the petition, filed October 11, 2005, under 37 CFR 1.313(c)(2) to withdraw the above-identified application from issue after payment of the issue fee.

The petition is **GRANTED**.

The above-identified application is withdrawn from issue for consideration of a submission under 37 CFR 1.114 (request for continued examination). See 37 CFR 1.313(c)(2).

Petitioner is advised that the issue fee paid on September 20, 2005, in the above-identified application, cannot be refunded. If, however, the above-identified application is again allowed, petitioner may request that it be applied towards the issue fee required by the new Notice of Allowance.[1]

Telephone inquiries relating to this decision should be directed to the undersigned at (571) 272-3204.

The application is being referred to Technology Center AU 2814 for further processing of the request for continued examination under 37 CFR 1.114.

Sherry D. Brinkley
Petitions Examiner
Office of Petitions

[1]The request to apply the issue fee to the new Notice may be satisfied by completing and returning the new Issue Fee Transmittal Form PTOL-85(b), which includes the following language thereon: "Commissioner for Patents is requested to apply the Issue Fee and Publication Fee (if any) or re-apply any previously paid issue fee to the application identified above." Petitioner is advised that, whether a fee is indicated as being due or not, the Issue Fee Transmittal Form **must** be completed and timely submitted to avoid abandonment. Note the language in bold text on the first page of the Notice of Allowance and Fee(s) Due (PTOL-85).

UNITED STATES PATENT AND TRADEMARK OFFICE

COMMISSIONER FOR PATENTS
UNITED STATES PATENT AND TRADEMARK OFFICE
P.O. BOX 1450
ALEXANDRIA, VA 22313-1450
www.uspto.gov

FRELING E. BAKER
BROWN MARTIN HALLER & MCCLAIM
1660 UNION STREET
SAN DIEGO CA 92101

COPY MAILED

APR 19 2004

OFFICE OF PETITIONS

In re Application of
Max I. Gurth
Application No. 10/669,566
Filed: September 25, 2003
Attorney Docket No. 8647-PA04

ON PETITION

This is a decision on the petition filed February 9, 2004, in response to the Notice to File Missing Parts mailed December 22, 2003, which is treated as a petition under 37 CFR 1.182 to accord a filing date.

The petition is **DISMISSED**.

On September 25, 2003, the application was filed.

On December 22, 2003, the Office of Initial Patent Examination (OIPE) mailed a Notice to File Missing Parts which indicated, *inter alia*, that the application had been accorded a filing date of September 25, 2003, but that 1) the oath or declaration submitted with the application was unsigned and 2) that page 7 of the specification was unacceptable as it does not comply with 37 CFR 1.52(a) and that a substitute specification in compliance with 37 CFR 1.152, 1.121(b) (3) and 1.125 is required.

In response, on February 9, 2004, the present petition was filed. Petitioners claim that an executed oath or declaration was filed upon application with the other application papers. Petitioner submits a copy of an executed oath or declaration, a copy of a date stamped post card receipt acknowledging receipt of the oath or declaration on September 25, 2003 and a copy of the application transmittal cover sheet in support of their claim that the oath or declaration submitted with the other application papers was executed.

The arguments have been considered, but are not persuasive. The U.S. Patent and Trademark Office (Office) file is the official record of the papers originally filed in this application. A review of the papers originally filed reveals that an oath or declaration was in fact filed, that is not disputed. However, the oath or declaration filed is not executed. Petitioner's assertion that the oath or declaration filed September 25, 2003 was executed, is not more persuasive than the contents of the official USPTO file.

Petitioner's submission of the date stamped postcard receipt is appreciated but, a postcard receipt which itemizes and properly identifies the paper(s) which is being filed only serves as *prima facie* evidence of receipt in the USPTO of all the items listed thereon on the date stamped thereon by the USPTO. Furthermore, the application transmittal sheet evidences, at best, petitioner's intent to file an oath or declaration and does not prove that the oath or declaration filed was executed.

Accordingly, the "Notice to File Missing Parts" mailed December 22, 2003, was correct in stating that the oath or declaration filed was "unsigned" and therefore, the petition fee will not be refunded. Likewise, since the oath or declaration submitted on September 25, 2003 was not executed, a fee in the amount of $65 is due for the late filing of the executed oath or declaration filed with this petition on February 9, 2004.

As to the second part of the "Notice" mailed December 22, 2003, petitioner has not submitted a substitute specification. Petitioner has also not even acknowledged that portion of the "Notice" which required a substitute specification.

All of the items described herein must be submitted within **TWO MONTHS** of the date of this decision, or proceedings on the application will be terminated.[1] **THIS TIME PERIOD MAY NOT BE EXTENDED PURSUANT TO 37 CFR 1.136.**

Failure to file a timely petition with the surcharge for the late filing of the executed oath or declaration and the substitute specification as required in the Notice to File Missing Parts mailed December 22, 2003 will result in the forwarding of the application to the Office of Initial Patent Examination with an indication that the application is abandoned.

Further correspondence with respect to this matter should be addressed as follows:

By mail: Mail Stop Petitions
Commissioner for Patents
P.O. Box 1450
Alexandria VA 22313-1450

By FAX: (703)872-9306
Attn: Office of Petitions

Telephone inquiries concerning this matter should be directed to the undesigned Petitions Attorney at (703) 305-4497.

Patricia Faison-Ball

Patricia Faison-Ball
Senior Petitions Attorney
Office of Petitions

[1] 37 CFR 1.53(e).

UNITED STATES PATENT AND TRADEMARK OFFICE

Commissioner for Patents
United States Patent and Trademark Office
P.O. Box 1450
Alexandria, VA 22313-1450
www.uspto.gov

FRELING E. BAKER
BROWN MARTIN HALLER & MCCLAIM
1660 UNION STREET
SAN DIEGO, CA 92101

COPY MAILED

JUL 3 0 2004

OFFICE OF PETITIONS

In re Application of
Max I. Gurth
Application No. 10/669,566
Filed: September 25, 2003
Attorney Docket No. 8647-PA04

ON PETITION

This is a decision on the petition under 37 CFR 1.137(b), filed July 20, 2004, to revive the above-identified application.

The petition is **DISMISSED**.

Any request for reconsideration of this decision must be submitted within TWO (2) MONTHS from the mail date of this decision. Extensions of time under 37 CFR 1.136(a) are permitted. The reconsideration request should include a cover letter entitled "Renewed Petition under 37 CFR 1.137(b)." No additional fee is required with any renewed petition. Petitioner is advised that this is **not** a final agency action decision.

The above-identified application became abandoned for failure to reply in a timely manner to the Notice to File Missing Parts of Nonprovisional Application (Notice) mailed December 22, 2003. The Notice set a period for reply of two (2) months from the mail date of the Notice. No extensions of time under the provisions of 37 CFR 1.136(a) were obtained. Accordingly, the above-identified application became abandoned on February 23, 2004.

A grantable petition to revive an abandoned application under 37 CFR 1.137(b) must be accompanied by: (1) the required reply (unless previously filed), which may met by the filing of a continuing application in a nonprovisional application abandoned for failure to prosecute, but must be the payment of the issue fee or any outstanding balance thereof in an application or patent, abandoned or lapsed for failure to pay the issue fee or any portion thereof; (2) the petition fee as set forth in 37 CFR 1.17(m); (3) a statement that the entire delay in filing the required reply from the due date for the reply until the filing of a grantable petition pursuant to 37 CFR 1.137(b) was unintentional; and (4) any terminal disclaimer (and fee as set forth in 37 CFR 1.20(d)). This petition lacks item (1) above.

As to item (1), the Notice to File Missing Parts of Nonprovisional Application mailed December 22, 2003, additionally required the submission of substitute specification in compliance with 37

CFR 1.52, 1.121(b)(3), and 1.125, is required. The specification, claims, or abstract page(s) submitted is not acceptable and cannot be scanned or properly stored because because the "papers must be legibly written either by a typewriter or mechanical printer in permanent ink or its equivalent in portrait orientation on flexible, strong, smooth, non-shiny, durable, and white paper...." Since petitioner has filed to submit the reply required by 37 CFR 1.137(b)(1), the petition must be dismissed.

Further correspondence with respect to this matter should be addressed as follows:

By mail: Mail Stop PETITION
Commissioner for Patents
Post Office Box 1450
Alexandria, VA 22313-1450

By hand: Customer Window located at:

U.S. Patent and Trademark Office
220 20th street S
Customer Window, Mail Stop Petitions
Crystal Plaza Two Lobby, Room 1B03
Arlington, VA 22202

By fax: (703) 872-9306
Attn: Office of Petitions

Telephone inquiries concerning this decision should be directed to Wan Laymon at (703) 306-5685.

Wan Laymon
Petitions Examiner
Office of Petitions
Office of the Deputy Commissioner
for Patent Examination Policy

UNITED STATES PATENT AND TRADEMARK OFFICE

Commissioner for Patents
United States Patent and Trademark Office
P.O. Box 1450
Alexandria, VA 22313-1450
www.uspto.gov

GORDON & REES
ATTENTION: IP GROUP
101 W. BROADWAY
SUITE 1600
SAN DIEGO, CA 92101

COPY MAILED

DEC 0 1 2004

OFFICE OF PETITIONS

In re Application of :
Max I. Gurth :
Application No. 10/669,566 : ON PETITION
Filed: September 25, 2003 :
Attorney Docket No. 8647-PA04 :

This is a decision on the renewed petition under 37 CFR 1.137(b), filed September 23, 2004, to revive the above-identified application.

The petition is GRANTED.

The Change of Correspondence Address; Associates with Customer Number filed on September 23, 2004 is noted and made of record.

Telephone inquiries concerning this decision should be directed to Wan Laymon at (571) 272-3220.

This matter is being referred to the Office of Initial Patent Examination for preexamination processing.

Wan Laymon
Wan Laymon
Petitions Examiner
Office of Petitions
Office of the Deputy Commissioner
for Patent Examination Policy

SPE RESPONSE FOR CERTIFICATE OF CORRECTION

Paper No.: —

DATE : 7/9/07

TO SPE OF : ART UNIT 2191

SUBJECT : Request for Certificate of Correction for Appl. No.: 10/669570 Patent No: 7213243B2

A response is requested with respect to a request for a certificate of correction.

With respect to the change(s) requested to correct Office and/or Applicant's errors, should the patent read as shown in the certificate of correction attached herewith or the COCIN document(s), in IFW images for the above-identified patented application? No new matter should be introduced, nor should the scope or meaning of the claims be changed.

If the response is for an IFW, within 7 days, please complete and forward the response, to the employee (named below) via scanning into application images, using document code **COCX**.

If the response is for a paper file wrapper, please complete the response and forward the response with the paper file wrapper, to the employee (named below), within 7 days, to:

Certificates of Correction Branch (CofC)
South Tower - 9A22
Palm Location 7580

VIRGINIA TOLBERT
Certificates of Correction Branch
703-308-9390 ext. 113

Thank You For Your Assistance

The request for issuing the above-identified correction(s) is hereby:
Note your decision on the appropriate box.

- ☒ **Approved** — All changes apply.
- ☐ **Approved in Part** — Specify below which changes **do not** apply.
- ☐ **Denied** — State the reasons for denial below.

Comments: _____

N. M. N.
SPE

2191
Art Unit

UNITED STATES PATENT AND TRADEMARK OFFICE

Commissioner for Patents
United States Patent and Trademark Office
P.O. Box 1450
Alexandria, VA 22313-1450
www.uspto.gov

XILINX, INC.
ATTN: LEGAL DEPARTMENT
2100 LOGIC DR
SANJOSE CA 95124

COPY MAILED

JAN 14 2005

OFFICE OF PETITIONS

In re Application of :
Stephen M. Trimberger :
Application No. 10/669,588 :
Filed: September 23, 2003 :
Attorney Docket No. X-419-1C-1D US :

ON PETITION

This is a decision on the petition, filed January 13, 2005, under 37 CFR 1.313(c)(2) to withdraw the above-identified application from issue after payment of the issue fee. This is also a decision on the petition under 37 CFR 1.78(a)(3), filed January 13, 2005, to accept an unintentionally delayed claim under 35 U.S.C. § 120 for the benefit of priority to prior-filed nonprovisional Application No. 09/805,553, filed March 12, 2001.

The petitions are **GRANTED**.

As to the petition under 37 CFR 1.313(c)(2):

The above-identified application is withdrawn from issue for consideration of a submission under 37 CFR 1.114 (request for continued examination). See 37 CFR 1.313(c)(2).

Petitioner is advised that the issue fee paid on December 15, 2004 in the above-identified application cannot be refunded. If, however, the above-identified application is again allowed, petitioner may request that it be applied towards the issue fee required by the new Notice of Allowance.[1]

As to the petition under 37 CFR 1.78(a)(3):

A petition for acceptance of a claim for late priority under 37 CFR 1.78(a)(3) is only applicable to those applications filed on or after November 29, 2000. Further, the petition is appropriate only after the expiration of the period specified in 37 CFR

---

[1] The request to apply the issue fee to the new Notice may be satisfied by completing and returning the new Issue Fee Transmittal Form PTOL-85(b), which includes the following language thereon: "Commissioner for Patents is requested to apply the Issue Fee and Publication Fee (if any) or re-apply any previously paid issue fee to the application identified above." Petitioner is advised that, whether a fee is indicated as being due or not, the Issue Fee Transmittal Form **must** be completed and timely submitted to avoid abandonment. Note the language in bold text on the first page of the Notice of Allowance and Fee(s) Due (PTOL-85).

1.78(a)(2)(ii). In addition, the petition under 37 CFR 1.78(a)(3) must be accompanied by:

> **(1)** the reference required by 35 U.S.C. § 120 and 37 CFR 1.78(a)(2)(i) of the prior-filed application, unless previously submitted;[2]
> **(2)** the surcharge set forth in § 1.17(t); and
> **(3)** a statement that the entire delay between the date the claim was due under 37 CFR 1.78(a)(2)(ii) and the date the claim was filed was unintentional. The Commissioner may require additional information where there is a question whether the delay was unintentional.

The instant pending application was filed on September 23, 2003. A reference to the prior-filed nonprovisional application has been included in an application data sheet, as required by 37 CFR 1.78(a)(3).

The instant nonprovisional application was filed after November 29, 2000, and the claim for priority herein is submitted after expiration of the period specified in 37 CFR 1.78(a)(2)(ii). Also, the reference to the prior-filed application was submitted during the pendency of the instant nonprovisional application, for which the claim for benefit of priority is sought. *See* 35 U.S.C. § 120. Accordingly, having found that the instant petition satisfies the conditions of 37 CFR 1.78(a)(3) for acceptance of an unintentionally delayed claim for priority under 35 U.S.C. § 120 , the petition to accept an unintentionally delayed claim of benefit to the prior-filed application is granted.

The granting of the petition to accept the delayed benefit claim to the prior-filed application under 37 CFR 1.78(a)(3) should <u>not</u> be construed as meaning that the instant application is entitled to the benefit of the prior-filed application. In order for the instant application to be entitled to the benefit of the prior-filed application, all other requirements under 35 U.S.C. § 120 and 37 CFR 1.78(a)(1) and (a)(2) must be met. Similarly, the fact that the corrected Filing Receipt accompanying this decision on petition includes the prior-filed application should not be construed as meaning that applicant is entitled to the claim for benefit of priority to the prior-filed application noted thereon. Accordingly, the examiner will, in due course, consider this benefit claim and determine whether the instant application is entitled to the benefit of the earlier filing date.

---

[2] Any nonprovisional application or international application designating the United States of America claiming the benefit of one or more prior-filed copending applications or international applications designating the United States of America must contain or be amended to contain a reference (amendment to the first line of the specification following the title or in an application data sheet (ADS) to each such prior-filed application, identifying it by application number (consisting of the series code and serial number) or international application number and international filing date filing date and indicating the relationship of the applications. Cross references to other related applications may be made when appropriate (*see* § 1.14).

A corrected Filing Receipt, accompanies this decision on petition.

Any inquiries concerning this decision may be directed to Karen Creasy at (571) 272-3208.

This application is being referred to Technology Center Art Unit 2824 for consideration by the examiner of the claim under 35 U.S.C. § 120 and 37 CFR 1.78(a)(2) for the benefit of prior-filed nonprovisional Application No. 09/805,553, filed March 12, 2001.

Karen Creasy

Karen Creasy
Petitions Examiner
Office of Petitions
Office of the Deputy Commissioner
for Patent Examination Policy

ATTACHMENT: Corrected Filing Receipt

UNITED STATES PATENT AND TRADEMARK OFFICE

COMMISSIONER FOR PATENTS
UNITED STATES PATENT AND TRADEMARK OFFICE
P.O. BOX 1450
ALEXANDRIA, VA 22313-1450
www.uspto.gov

Paper No. _____

Date : January 14, 2005

TO : Director, Office of Patent Publication

FROM : Office of the Deputy Commissioner
for Patent Examination Policy

SUBJECT : Withdrawal from Issue of Application No. 10/669,588

Applicant(s) :Stephen M. Trimberger
Application No. :10/669,588
Filed :September 23, 2003

The above-identified application has been assigned Patent No. 6,850,445 and an issue date of February 1 , 2005.

It is hereby directed that this application be withdrawn from issue at the request of the applicants.

The following erratum should be published in the Official Gazette if the above-identified application is published in the OG of February 1, 2005:

"All reference to Patent No. 6,850,445 to Stephen M. Trimberger of California for PROGRAMMABLE CAPACITOR AND METHOD OF OPERATING SAME appearing in the Official Gazette of February 1, 2005 should be deleted since no patent was granted."

Karen Creasy

Karen Creasy
Petitions Examiner
Office of Petitions
Office of the Deputy Commissioner
for Patent Examination Policy

cc: Paul Harrison, Crystal Park 3-441 (FAX-306-2737)
Deneise Boyd, Crystal Park 2, Suite 1100 (FAX-308-5413)
Mary Louise McAskill, Crystal Park 3-910 (FAX 305-4372)
Niomi Farmer, Crystal Park 3-910 (FAX-305-4372)
Mary E. Johnson (Cookie), P/OCS, CM1-6D07
Duane Davis (CDS), CM1-6A07
Tamara Greene, Crystal Park 3-908

UNITED STATES PATENT AND TRADEMARK OFFICE

COMMISSIONER FOR PATENTS
UNITED STATES PATENT AND TRADEMARK OFFICE
P.O. BOX 1450
ALEXANDRIA, VA 22313-1450
www.uspto.gov

PEARNE & GORDON LLP
1801 EAST 9TH STREET
SUITE 1200
CLEVELAND OH 44114-3108

MAILED
31 MAY 2006

In re Application of
Hisao KOGA, et al.
Application No. 10/669,592
Filed: September 23, 2003
For: **COMMUNICATION APPARATUS**

DECISION ON PETITION
TO MAKE SPECIAL

This is a decision on the petition filed April 27, 2006 under Manual of Patent Examination Procedure §708.02, VIII requesting accelerated examination.

The petition under Manual of Patent Examination Procedure §708.02, VIII, must:
(1) be filed prior to receiving any examination by the examiner,
(2) be accompanied by the required fee- $130,
(3) the claims should be directed to a single invention (if it is determined that the claims pertain to more than one invention, then applicant will have to make an election without traverse or forfeit accelerated examination status),
(4) state that a pre-examination search was made, and fully discuss the search method employed, such as classes and subclasses searched, publications, Chemical abstracts, patents, etc. A search made by a foreign patent office satisfies this requirement,
(5) be accompanied by a copy of each of the references most closely related to the subject matter encompassed by the claims if said references are not already of record,
(6) fully discuss the references, pointing out with the particularity required by 37 C.F.R. §1.111 (b) and (c), how the claimed subject matter is patentable over the references.

The petitioner meets all the above-listed requirements. Accordingly, the petition is **GRANTED**.

The application will retain its special status throughout its entire prosecution, including any appeal to the Board of Patent Appeals and Interferences, subject only to diligent prosecution by the applicant. The application file is being forwarded to the examiner for appropriate action in due course.

Krista Zele
Special Program Examiner
Technology Center 2600
Communications

UNITED STATES PATENT AND TRADEMARK OFFICE

COMMISSIONER FOR PATENTS
UNITED STATES PATENT AND TRADEMARK OFFICE
P.O. BOX 1450
ALEXANDRIA, VA 22313-1450
www.uspto.gov

JJGJr.: 04-05

Paper No. __

JONES DAY
222 EAST 41ST ST
NEW YORK NY 10017

COPY MAILED

APR 15 2005

OFFICE OF PETITIONS

In re Application of :
Chen, et al. :
Application No. 10/669,606 :
Filed: 23 September, 2003 :
Attorney Docket No.: 11134-028-999 :

DECISION
ON PETITION

This is a decision on the petition under 37 C.F.R. §1.78(a)(6), filed 25 June, 2004, to accept an unintentionally delayed claim under 35 U.S.C. §119(e) for the benefit of priority to a prior filed provisional application (to wit: Application No. 60/413,335, filed 24 September, 2002).

The Office regrets the delay in addressing this matter.

The petition is **GRANTED**.

A review of the file record fails to disclose that a claim for the benefit of priority to the above-noted, prior-filed provisional application was made within the time period set forth in 37 C.F.R. §1.78(a)(5)(ii) and further failed to include a proper reference to the above-noted, prior-filed application as required by 37 C.F.R. §1.78(a)(5)(i) and §1.78(a)(5)(iii).

The instant application was filed 23 September, 2003. Therefore, since this application was filed after November 29, 2000, a petition under 37 C.F.R. §1.78(a)(6) is the appropriate avenue of relief to accept a late claim for the benefit of priority to a prior-filed provisional application.

A petition for acceptance of a claim for late priority under 37 C.F.R. §1.78(a)(6) is only applicable to those applications filed on or after November 29, 2000. Further, the petition is appropriate only after the expiration of the period specified in 37

C.F.R. §1.78(a)(5)(ii). In addition, the petition under 37 C.F.R. §1.78(a)(6) must be accompanied by:

- the reference required by 35 U.S.C. §119(e) and 37 C.F.R. §1.78(a)(5)(i) of the prior-filed application, unless previously submitted;[1]
- the surcharge set forth in §1.17(t); and
- a statement that the entire delay between the date the claim was due under 37 C.F.R. §1.78(a)(5)(ii) and the date the claim was filed was unintentional. The Commissioner may require additional information where there is a question whether the delay was unintentional.

The granting of a petition to accept the delayed benefit claim to the prior-filed application(s) under 37 C.F.R. §1.78(a)(6) should not be construed as meaning that the instant application is entitled to the benefit of the prior-filed application(s). In order for the instant application to be entitled to the benefit of the prior-filed application(s), all other requirements under the statute and regulation must be met. Similarly, the fact that the corrected Filing Receipt accompanying this decision includes the prior-filed application(s) should not be construed as meaning that the applicant is entitled to the claim for benefit of priority to the prior-filed application noted thereon. Accordingly the Examiner will, in due course, consider this benefit claim and determine whether the instant application is entitled to the benefit of the earlier filing date.

A corrected Filing Receipt, which includes the priority claim to the above-noted, prior-filed provisional application, accompanies this decision on petition.

This matter is being referred to Technology Center 1600 for further processing in due course.

Inquiries concerning this decision may be directed to John Gillon, Senior Attorney, Office of Petitions at (571) 272-3214.

Frances Hicks
Frances Hicks
Petitions Examiner
Office of Petitions

Encl.: Corrected Filing Receipt

[1] Any nonprovisional application or international application designating the United States of America claiming the benefit of one or more prior-filed copending applications or international applications designating the United States of America must contain or be amended to contain a reference (amendment to the first line of the specification following the title or in an application data sheet (ADS) to each such prior-filed application, identifying it by application number (consisting of the series code and serial number) or international application number and international filing date filing date and indicating the relationship of the applications. Cross references to other related applications may be made when appropriate.

UNITED STATES PATENT AND TRADEMARK OFFICE

COMMISSIONER FOR PATENTS
UNITED STATES PATENT AND TRADEMARK OFFICE
P.O. BOX 1450
ALEXANDRIA, VA 22313-1450
www.uspto.gov

DUNLAP, CODDING & ROGERS P.C.
PO BOX 16370
OKLAHOMA CITY, OK 73113

COPY MAILED

NOV 08 2005

OFFICE OF PETITIONS

In re Application of :
Fagan et al. :
Application No. 10/669,614 :
Filed: September 24, 2003 :
Attorney Docket No. 5820.642 :

This is a decision in response to the petition under 37 CFR 1.137(b), filed October 14, 2005, to revive the above-identified application.

This Petition is hereby **granted**.

The above-identified application became abandoned for failure to reply in a timely manner to the non-final Office action, mailed February 2, 2005. The Office action set a three (3) month period for reply, and provided for extensions of time under 37 CFR 1.136(a). No reply having been received, the application became abandoned on May 3, 2005. A Notice of Abandonment was mailed on September 19, 2005.

With the instant petition, Petitioner has satisfied the requirements of a grantable petition under 37 CFR 1.137(b). An Amendment in response to the February 2, 2005 Office action is filed with the instant petition. Accordingly, the petition is granted.

This application is being forwarded to Technology Center Art Unit 3662 for processing of the Amendment, filed October 14, 2005, in due course.

Telephone inquiries concerning this matter should be directed to the undersigned at (571) 272-3232.

Derek L. Woods
Attorney
Office of Petitions

UNITED STATES PATENT AND TRADEMARK OFFICE

UNITED STATES DEPARTMENT OF COMMERCE
United States Patent and Trademark Office
Address: COMMISSIONER FOR PATENTS
P.O. Box 1450
Alexandria, Virginia 22313-1450
www.uspto.gov

BAKER BOTTS L.L.P.
2001 ROSS AVENUE
SUITE 600
DALLAS, TX 75201-2980

Mail Date: 04/20/2010

Applicant	: John F. Wakerly	: DECISION ON REQUEST FOR
Patent Number	: 7664823	: RECALCULATION of PATENT
Issue Date	: 02/16/2010	: TERM ADJUSTMENT IN VIEW
Appliction No	: 10/669,624	: OF WYETH AND NOTICE OF INTENT TO
Filed	: 09/24/2003	: ISSUE CERTIFICATE OF CORRECTION
		:

The Request for Recalculation is **GRANTED** to the extent indicated.

The patent term adjustment has been determined to be **1908** days. The USPTO will *sua sponte* issue a certificate of correction reflecting the amount of PTA days determined by the recalculation.

Prior to the issuance of the certificate of correction, the USPTO will afford patentee an opportunity to be heard and request reconsideration. Accordingly, patentee has **one month or thirty (30) days**, whichever is longer, to file a request for reconsideration of this patent term adjustment calculation. See 35 U.S.C. 154(b)(3)(B)(ii) and 37 CFR 1.322(a)(4). No extensions of time will be granted under 37 CFR 1.136.

Patentee should use document code PET.OP if electronically filing a request for reconsideration of this patent term adjustment calculation. The patentee must also include the information required by 37 CFR 1.705(b)(2) and the fee required by 37 CFR 1.18(e). If patentee does not file a timely request for reconsideration of this patent term adjustment calculation including the information required by 37 CFR 1.705(b)(2) and the fee required by 37 CFR 1.18(e), the USPTO will issue a certificate of correction reflecting the PTA determination noted above.

Patentee should be aware that in order to preserve the right to review in the United States District Court for the District of Columbia of the USPTO patent term adjustment determination, patentee must ensure that he or she also take the steps required under 35 U.S.C. 154(b)(4)(A) in a timely manner. Nothing in the request for recalculation should be construed as providing an alternative time frame for commencing a civil action under 35 U.S.C. 154(b)(4)(A).

Any questions concerning this decision should be directed to the Office of Patent Legal Administration at 571-272-7702.

UNITED STATES PATENT AND TRADEMARK OFFICE

Commissioner for Patents
United States Patent and Trademark Office
P.O. Box 1450
Alexandria, VA 22313-1450
www.uspto.go

MAIL

NOV 2 2005

DIRECTOR OFFICE
TECHNOLOGY CENTER 2600

MCDERMOTT, WILL & EMERY
600 13TH Street, N.W.
WASHINGTON, D.C. 20005-3096

In re Application of
Joseph Bekanich
Application No. 10/669,628
Filed: September 25, 2003

For: **APPARATUS AND METHOD FOR MONITORING THE TIME USAGE OF A WIRELESS COMMUNICATION DEVICE**

DECISION ON REQUEST TO WITHDRAW FROM RECORD

This is a decision on the request for withdrawal as agent of record filed on February 09, 2005.

A grantable request to withdraw as agent of record must:
(1) indicate the present mailing address of the attorney(s)/agent(s) who seek(s) to withdraw, and
(2) be signed by each attorney/agent seeking to withdraw or clearly be signed on their behalf, and
(3) be *approved* at least thirty (30) days prior to the maximum extendable period for response to any outstanding Office Action, and
(4) indicate the address to which future correspondence should be mailed.

Petitioner has met all of the above. Accordingly, the request is **GRANTED**.

All attorneys/agents associated have been withdrawn.

All future communications from the Office will be directed to the address listed below until otherwise notified by applicant. Applicant is reminded of the obligation to promptly notify the Patent and Trademark Office of any change in correspondence address to ensure receipt of all communications from the Office.

The file is being returned to TC 2600 Technical Support Staff.

Kenneth Wieder
Special Program Examiner
Technology Center 2600
Communications
(571) 272-2986

cc:

Dickstein Shapiro Morin & Oshinsky
2101 L Street
Washington DC 20037

UNITED STATES PATENT AND TRADEMARK OFFICE

Commissioner for Patents
United States Patent and Trademark Office
P.O. Box 1450
Alexandria, VA 22313-1450
www.uspto.gov

JACOBSON HOLMAN PLLC
400 SEVENTH STREET N.W.
SUITE 600
WASHINGTON DC 20004

COPY MAILED

JAN 1 8 2005

OFFICE OF PETITIONS

In re Application of	:	
Green, Peter Clifford	:	
Application No. 10/669,636	:	ON PETITION
Filed: September 25, 2003	:	
Attorney Docket No. P65280US3	:	

This is a decision on the petition under 37 C.F.R. § 1.137(b), filed July 21, 2004, to revive the above-identified application.

The petition is **DISMISSED**.

Any request for reconsideration must be submitted within TWO (2) MONTHS from the mail date of this decision. No further petition fee is required for the request. Extensions of time under 37 CFR 1.136(a) are permitted. The reconsideration request should include a cover letter entitled "Renewed Petition under 37 CFR 1.137(b)." This is **not** a final agency action within the meaning of 5 U.S.C. § 704.

The above-identified application became abandoned for failure to reply in a timely manner to the Notice to File Missing Parts of Application (Notice) mailed December 18, 2003. The Notice set a period for reply of two (2) months from the mail date of the Notice. No extensions of time under the provisions of 37 CFR 1.136(a) were obtained. Accordingly, the above-identified application became abandoned on February 19, 2004.

A grantable petition under 37 CFR 1.137(b) must be accompanied by:
(1) the required reply,[1]
(2) the petition fee,
(3) a statement that the entire delay in filing the required reply from the due date for the reply until the filing of a grantable petition pursuant to 37 CFR 1.137(b) was unintentional, and
(4) a terminal disclaimer and fee if the application was filed on or before June 8, 1995 or if the application is a design application.

Where there is a question as to whether either the abandonment or the delay in filing a petition under 37 CFR 1.137 was unintentional, the Commissioner may require additional information.[2]

---

[1] In a nonprovisional application abandoned for failure to prosecute, the required reply may be met by the filing of a continuing application. In an application or patent, abandoned or lapsed for failure to pay the issue fee or any portion thereof, the required reply must be the payment of the issue fee or any outstanding balance thereof.

[2] See MPEP 711.03(c)(III)(C) and (D).

The instant petition lacks item (1). As a response to the Notice, petitioner states that a continuation application was submitted. Unfortunately, Office computer database records fail to disclose the filing of a continuation application on or around the time of filing of the instant petition to revive. **Accordingly, petitioner must state the application number of the continuation application in order that a proper decision on the merits of this petition may be given.**

Further correspondence with respect to this matter should be addressed as follows:

By mail: Mail Stop PETITIONS
Commissioner for Patents
Post Office Box 1450
Alexandria, VA 22313-1450

By hand: Customer Window located at:

U.S. Patent and Trademark Office
220 20th Street S
Customer Window, Mail Stop Petitions
Crystal Plaza Two Lobby, Room 1B03
Arlington, VA 22202

By fax: (703) 872-9306
ATTN: Office of Petitions

Any questions concerning this matter may be directed to the undersigned at (571) 272-3206.

Liana Chase
Petitions Examiner
Office of Petitions
Office of the Deputy Commissioner
for Patent Examination Policy

UNITED STATES PATENT AND TRADEMARK OFFICE

Commissioner for Patents
United States Patent and Trademark Office
P.O. Box 1450
Alexandria, VA 22313-1450
www.uspto.gov

JACOBSON HOLMAN PLLC
400 SEVENTH STREET N.W.
SUITE 600
WASHINGTON, DC 20004

COPY MAILED

JUN 14 2005

OFFICE OF PETITIONS

In re Application of
Green, Peter Clifford
Application No. 10/669,636
Filed: September 25, 2003
Attorney Docket No. P65280US3

ON PETITION

This is a decision on the renewed petition under 37 C.F.R. § 1.137(b), filed February 8, 2005, to revive the above-identified application.

The petition is **GRANTED.**

Petitioner has met the requirements to revive the above-identified application pursuant to 37 CFR 1.137(b).

The above-identified application is being revived solely for purposes of continuity. As continuity has been established by this decision reviving the above-identified application, the above-identified application is again abandoned in favor of continuing application No. 11/134,634.

Telephone inquiries regarding this decision should be directed to the undersigned at (571) 272-3282.

Liana Chase
Petitions Examiner
Office of Petitions
Office of the Deputy Commissioner
for Patent Examination Policy

OIPE IAP14
NOV 21 2005
PATENT & TRADEMARK OFFICE

Express Mailing Label
#ED523182954US
PATENT
File No. 1427-001

IN THE UNITED STATES PATENT AND TRADEMARK OFFICE

In Re Application of	)	
	)	Date: November 21, 2005
FRED P. BEIERLE	)	
	)	
Application No. 10/669,666	)	
	)	
For: METHOD OF PRODUCING CHARCOAL, CONDITIONED FUEL GAS AND POTASSIUM FROM BIOMASS	)	Filing Date: 09/23/2003
	)	1764
	)	Griffin, Walter

APPLICANT'S PETITION TO MAKE SPECIAL

Commissioner for Patents
P.O. Box 1450
Alexandria, VA 22313-1450

Dear Sir:

The applicant now petitions the Commissioner to make application No. 10/669,666 special, without fee, on the basis of the applicant's age. By separate declaration, appended hereto and incorporated herein by this reference, the applicant states facts pertinent to his age. As a consequence, the applicant requests the Commissioner to make special this application and that its handling be expedited. This petition is made pursuant to 37 CFR 1.102(c) and MPEP 708.02 IV.

PETITION GRANTED

William Krynski
Special Program Examiner
TC1700

UNITED STATES PATENT AND TRADEMARK OFFICE

Commissioner for Patents
United States Patent and Trademark Office
P.O. Box 1450
Alexandria, VA 22313-1450
www.uspto.gov

Floyd E. Ivey
Liebler, Ivey, Connor & Berry
P.O. Box 6125
Kennewick, WA 99336

COPY MAILED

MAY 01 2007

OFFICE OF PETITIONS

In re Patent of	:	
Fred P. Beierle	:	
Application No. 10/669666	:	DECISION
Filing or 371(c) Date: 09/23/2003	:	ON PETITION
Attorney Docket Number: P-1427-001	:	

This is a decision on the correspondence entitled "Petition for issuance in Name of Assignee After payment of the Issue Fee, filed February 1, 2007". The petition is properly treated under 37 CFR 3.81(b).

The Petition is **dismissed**.

Any further petition to revive the above-identified application must be submitted within TWO (2) MONTHS from the mail date of this decision. Extensions of time under 37 CFR 1.136(a) are permitted. The reconsideration request should include a cover letter entitled "Request for Reconsideration of Petition under [insert the applicable code section]". This is **not** final agency action within the meaning of 5 U.S.C. § 704.

Applicant files the instant petition and requests correction of the assignee name.

Applicable Law, Rules and MPEP

37 CFR 3.81(b) provides:

After payment of the issue fee: Any request for issuance of an application in the name of the assignee submitted after the date of payment of the issue fee, and any request for a patent to be corrected to state the name of the assignee, must state that the assignment was submitted for recordation as set forth in § 3.11 before issuance of the patent, and must include a request for a certificate of correction under § 1.323 of this chapter (accompanied by the fee set forth in § 1.20(a)) and the processing fee set forth in § 1.17 (i) of this chapter. (Emphasis supplied).

Analysis and conclusion

Applicant has failed to state that the assignment was submitted for recordation as set forth in § 3.11 before issuance of the patent. Applicant should file a Request for Reconsideration of Petition and include the statement.

Further correspondence with respect to this matter should be addressed as follows:

By mail:	Director for Patents PO Box 1450 Alexandria, VA 22313-1450
By FAX:	(571) 273-8300 Attn: Office of Petitions
By hand:	Customer Service Window Randolph Building 401 Dulany Street Alexandria, VA 22314

Telephone inquiries concerning this matter should be directed to the undersigned at (571) 272-3232.

Derek L. Woods
Attorney
Office of Petitions

RECEIVED
CENTRAL FAX CENTER
JUL - 3 2007

OFFICIAL FILING BY FACSIMILE FILING 571 273 8300 ON JULY 3, 2007 TO OFFICE OF PETITIONS (EXAMINER JENNIFER A. LEUNG, TELEPHONE 571 272 1449, ART UNIT 1764)

Our Ref. No. P-1427-001

Petition 12 pages,
Drawings ___ sheets
Terminal Disclaimer ____sheet.
Exhibits ___ pages
Total Fax pages ___

IN THE UNITED STATES PATENT AND TRADEMARK OFFICE

In Re Application of: BEIERLE	Date: July 3, 2007
Serial No. 10/669,666 Patent No. 7,226,566	Group Art Unit: 1764
Filed: September 23, 2003	Examiner: Jennifer A. Leung
For: METHOD OF PRODUCING CHARCOAL, CONDITIONED GAS AND POTASSIUM FROM BIOMASS	

REQUEST FOR RECONSIDERATION OF DISMISSAL OF PETITION FOR ISSUANCE IN NAME OF ASSIGNEE AFTER PAYMENT OF THE ISSUE FEE

Hon. Commissioner of Patents and Trademarks
Washington, D.C. 20231

Dear Commissioner:

REQUEST FOR RECONSIDERATION

The Decision on Petition, from which Reconsideration is requested, is attached hereto. The Decision on Petition is executed by Attorney Derek L. Woods, Office of Petitions.

The Decision states in part that "Any further petition to revive the above-identified application must be submitted within TWO (2) MONTHS from the mail date of this decision."

Certificate of filing by facsimile on July 3, 2007 by Floyd E. Ivey, Serial No. 10/669,666; Patent No. 7,226,566

Floyd E. Ivey, USPTO 35552

Application No. 10/669,666; Patent No. 7,226,566

PAGE 1/12 * RCVD AT 7/3/2007 8:57:14 PM [Eastern Daylight Time] * SVR:USPTO-EFXRF-1/4 * DNIS:2738300 * CSID:5097353585 * DURATION (mm-ss):04-00

BEST AVAILABLE COPY

Your applicant did not petition to revive. Further, Patent No. 7,226,566 has matured from application 10/669,666.

Your applicant believes that this Request for Reconsideration is timely filed. Your applicant does not find directions re: the filing of a Request for Reconsideration and does not believe that 37 CFR 1.136(a) pertains. Your applicant objects to the Patent Office asserting a fee for this Request for Reconsideration. However, if such is asserted then it shall be no more than for the filing within the first month and the fee, per 1.17(a)(1) of $60.00. The Office of Petitions is authorized to deduct said amount, under protest by the applicant, from the deposit account of Liebler, Ivey & Connor, P.S./Floyd E. Ivey, 35,552, Deposit account No. 50-0607 and, further, to deduct other fees which may be owing from said Deposit Account No. 50-0607.

DECISION ON PETITION

The Decision on Petition was mail dated May 1, 2007 but received at this Office on May 4, 2007. Patent No. 7,226,566 matured from Application 10/669,666 without stating the assignment from the inventor to Center for Strategic Alliance. The Petitioner's Petition fully demonstrated the recordation and complied with 37 CFR 3.11(b). Nevertheless the Petition was Dismissed.

HISTORY OF THE PETITION FOR ISSUANCE IN NAME OF ASSIGNEE

The applicant respectfully Petitioned, on February 1, 2007, for Issuance in the Name of the Assignee CENTER OF STRATEGIC ALLIANCE, INC.

On the date of Petition the issue fee had been paid on January 24, 2007.

The Date of Allowance was December 26, 2006.

The Assignment of this Patent is found at REEL/Frame: 016937/0912,

Certificate of filing by facsimile on July 3, 2007 by Floyd E. Ivey, Serial No. 10/669,666; Patent No. 7,226,566

Floyd E. Ivey, USPTO 35552

Application No. 10/669,666; Patent No. 7,226,566

PAGE 2/12 * RCVD AT 7/3/2007 8:57:14 PM [Eastern Daylight Time] * SVR:USPTO-EFXRF-1/4 * DNIS:2738300 * CSID:5097353585 * DURATION (mm-ss):04-00

RECORDATION DATE 09/02/2005 and is further evidenced by the RECORDATION and was attached to the Petition.

PETITION DISMISSED

On May 4, 2007 Petitioner received "Petition Dismissed" mail date May 1, 2007. The Decision on Petition stated in part that

> "Applicant has failed to state that the assignment was submitted for recordation as set forth in 3.11 before issuance of the patent. Applicant should file a Request for Reconsideration of Petition and include the statement."

Your applicant respectfully draws to the attention of the Office of Petitions the facts of the Petition in setting forth all information demonstrating that "THE ASSIGNMENT WAS SUBMITTED FOR RECORDATION AS SET FORTH IN 3.11 BEFORE ISSUANCE OF THE PATENT." including the Recordation record.

Your applicant respectfully inquires if the Office of Petitions interprets 37 CFR 3.11(b) to require the precise actual words "The assignment was submitted for recordation as set forth in 3.11 before issuance of the patent." in order for the Office of Petitions to grant such a Petition?

Additionally, on April 27, 2007, Attorney Derek Wood, telephone number 571 272 3232 called and left the message that "Petition is not grantable because he didn't file a Certificate of Correction per rule 35 CFR 3.81(b)." Your applicant respectfully advises that a "CERTIFICATE OF CORRECTION" is hereby submitted stating the absence of identification of the Assignee on the Patent as Issued and giving full identification of the Assignee and all history presented by the Notice of Recordation of Assignment.

Your applicant respectfully observes that 37 CFR 3.81(b) does not require that the Petitioner draft and file a Certificate of Correction but rather states that the Petitioner

PAGE 3/12 * RCVD AT 7/3/2007 8:57:14 PM [Eastern Daylight Time] * SVR:USPTO-EFXRF-1/4 * DNIS:2738300 * CSID:5097353585 * DURATION (mm-ss):04-00

must "...include a request for a certificate of correction under 1.323." Such request was made in the Petition filed February 1, 2007.

STATEMENT BY PETITIONER

The Petition filed by your applicant on February 1, 2007, provided all Recordation information and fact information re: the application 10/669,666 maturing to a patent. However, your applicant did not use the precise words indicated to be required in the Decision on Petition of mailing date May 1, 2007. Your Applicant now states the following:

"THE ASSIGNMENT WAS SUBMITTED FOR RECORDATION AS SET FORTH IN 3.11 BEFORE ISSUANCE OF THE PATENT."

The statement additionally is incorporated by this reference into the Original petition filed February 1, 2007.

FEES PAID

Your applicant believes that all fees were paid with the submission of the original Petition on February 1, 2007. If other fees are owing then the Examiner is authorized to deduct such fees from the Deposit Account as stated in the foregoing authorization.

RECONSIDERATION OF THE PETITION PURSUANT TO 35 CFR 3.81(b)

Your applicant requests that the Office of Petitions Reconsider the Dismissal of May 1, 2007 and to allow the Certificate of Correction as submitted herewith or to otherwise enter the correction to show the Assignment of the Patent as indicated by the Petition, the Recordation and this Request for Reconsideration.

SUMMARY OF THE PETITIONS

Certificate of filing by facsimile on July 3, 2007 by Floyd E. Ivey, Serial No. 10/669,666, Patent No. 7,226,566

Floyd E. Ivey, USPTO 35552

Application No. 10/669,666; Patent No. 7,226,566

PAGE 4/12 * RCVD AT 7/3/2007 8:57:14 PM [Eastern Daylight Time] * SVR:USPTO-EFXRF-1/4 * DNIS:2738300 * CSID:5097353585 * DURATION (mm-ss):04-00

Your applicant has Petitioned for identification of the Assignee on the Patent and for a Certificate of Correction. Your applicant respectfully requests the Office of Petitions to grant the Petitions herein.

Respectfully submitted,

FLOYD E. IVEY
Registration No. 35,552

Telephone No. (509) 735-3581

****

CERTIFICATE OF TRANSMISSION:

The undersigned hereby certifies that this correspondence is being filed by facsimile 571 273 8300 with the USPTO OFFICE OF PETITIONS July 3, 2007.

Signature

Certificate of filing by facsimile on July 3, 2007 by Floyd E. Ivey, Serial No. 10/669,666; Patent No. 7,226,566

Floyd E. Ivey, USPTO 35552

Application No. 10/669,666; Patent No. 7,226,566

PAGE 5/12 * RCVD AT 7/3/2007 8:57:14 PM [Eastern Daylight Time] * SVR:USPTO-EFXRF-1/4 * DNIS:2738300 * CSID:5097353585 * DURATION (mm-ss):04-00

PTO/SB/44 (07-07)
Approved for use through 07/31/2007. OMB 0651-0033
U.S. Patent and Trademark Office; U.S. DEPARTMENT OF COMMERCE
Under the Paperwork Reduction Act of 1995, no persons are required to respond to a collection of information unless it displays a valid OMB control number.
(Also Form PTO-1050)

UNITED STATES PATENT AND TRADEMARK OFFICE
CERTIFICATE OF CORRECTION

PATENT NO. : US 7,226,566 B2

APPLICATION NO.: Appl. No.: 10/669,666

ISSUE DATE : Datent of Patent: Jun. 5, 2007

INVENTOR(S) : Fred P. Beierle

It is certified that an error appears or errors appear in the above-identified patent and that said Letters Patent is hereby corrected as shown below:

The Letters Patent as issued do not identify the Assignee, which is CENTER FOR STRATEGIC ALLIANCE, INC., THE

629 E. Moulton, P.O. Box 57, Hickman, Kentucky 42050 as demonstrated by the United States patent and Trademark Office Notice of Recordation of Assignment Document dated December 28, 2005 and stating the following:

Recordation Date: 09/02/2005 Reel/Frame: 016937/0912 Number of Pages: 8

Assignment of Assignor's Interest. Assignor: Ablestien Industries, Inc.

Doc Date: 08/24/2005; Assignor: Beierle, Fred P. Doc Date 08/24/2005;

Assignee: Center for Strategic Alliance, Inc., The, 629 E. Moulton, P.O. Box 57 Hickman, Kentucky 42050.

Searial Number: 10669666, Filing Date: 09/23/2003; Title: Method of Producing Charcoal, Conditioned Fuel gas and Potassium from Biomass

MAILING ADDRESS OF SENDER (Please do not use customer number below):
Floyd E. Ivey, P.O.Box 6125, 1141 N. Edison, Kennewick, Wa 99336

This collection of information is required by 37 CFR 1.322, 1.323, and 1.324. The information is required to obtain or retain a benefit by the public which is to file (and by the USPTO to process) an application. Confidentiality is governed by 35 U.S.C. 122 and 37 CFR 1.14. This collection is estimated to take 1.0 hour to complete, including gathering, preparing, and submitting the completed application form to the USPTO. Time will vary depending upon the individual case. Any comments on the amount of time you require to complete this form and/or suggestions for reducing this burden, should be sent to the Chief Information Officer, U.S. Patent and Trademark Office, U.S. Department of Commerce, P.O. Box 1450, Alexandria, VA 22313-1450. DO NOT SEND FEES OR COMPLETED FORMS TO THIS ADDRESS. SEND TO: **Attention Certificate of Corrections Branch, Commissioner for Patents, P.O. Box 1450, Alexandria, VA 22313-1450.**

If you need assistance in completing the form, call 1-800-PTO-9199 and select option 2.

6

RECEIVED
CENTRAL FAX CENTER
JUL - 3 2007

OFFICIAL FILING BY FACSIMILE TRANSMISSION ON FEBRUARY 1, 2007 TO FACSIMILE #571-273-8300, FOR OFFICE OF PETITIONS AND FOR EXAMINER JENNIFER A. LEUNG, TELEPHONE 571 272 1449, ART UNIT 1764

Our Ref. No. P-1427-001

Petition 5 pages,
Drawings ___ sheets
Terminal Disclaimer ____sheet.
Exhibits ___ pages
Total Fax pages ___

IN THE UNITED STATES PATENT AND TRADEMARK OFFICE

In Re Application of: BEIERLE	Date: February 1, 2007
Serial No. 10/669,666	Group Art Unit: 1764
Filed: September 23, 2003	Examiner: Jennifer A. Leung
For: METHOD OF PRODUCING CHARCOAL, CONDITIONED GAS AND POTASSIUM FROM BIOMASS	

PETITION FOR ISSUANCE IN NAME OF ASSIGNEE AFTER PAYMENT OF THE ISSUE FEE

Hon. Commissioner of Patents and Trademarks
Washington, D.C. 20231

Dear Commissioner:

The applicant respectfully Petitions for Issuance in the Name of the Assignee.

The issue fee has been paid on January 24, 2007.

The Date of Allowance is December 26, 2006.

The Assignment of this Patent is found at REEL/Frame: 016937/0912, RECORDATION DATE 09/02/2005 and is further evidenced by the RECORDATION attached hereto.

Certificate of facsimile filing on February 1, 2007 by Floyd E. Ivey, Serial No. 10/669,666

Application No. 10/669,666

Floyd E. Ivey, USPTO 35352

PAGE 7/12 * RCVD AT 7/3/2007 8:57:14 PM [Eastern Daylight Time] * SVR:USPTO-EFXRF-1/4 * DNIS:2738300 * CSID:5097353585 * DURATION (mm-ss):04-00

RECEIVED
CENTRAL FAX CENTER
JUL - 3 2007

PETITION PURSUANT TO 35 CFR 3.81(b)

Your applicant petitions pursuant to 35 CFR 3.81 (b) that the Patent issue in the name of CENTER FOR STRATEGIC ALLIANCE as shown on the RECORDATION indicated above.

Your applicant petitions pursuant to 35 CFR 3.81(b) that a CERTIFICATE OF CORRECTION be issued pursuant to 35 CFR 1.323.

The Office of Petitions is hereby authorized to deduct fees of $130.00 re: the Petition After Payment of Issue Fee and $100.00 re: the CERTIFICATE OF CORRECTION from the deposit account of Liebler, Ivey & Connor, P.S./Floyd E. Ivey, 35,552, Deposit account No. 50-0607 and, further, to deduct other fees which may be owing from said Deposit Account No. 50-0607.

SUMMARY OF THE PETITIONS

Your applicant has Petitioned for identification of the Assignee on the Patent and for a Certificate of Correction. Your applicant respectfully requests the Office of Petitions to grant the Petitions herein.

Respectfully submitted,

FLOYD E. IVEY
Registration No. 35,552

Telephone No. (509) 735-3581

****

CERTIFICATE OF TRANSMISSION:

The undersigned hereby certifies that this correspondence is being facsimile transmitted to the USPTO, #571-273-8300, OFFICE OF PETITIONS February 1, 2007.

Signature

Certificate of facsimile filing on February 1, 2007 by Floyd E. Ivey, Serial No. 10/669,666

Floyd E. Ivey, USPTO 35552

Application No. 10/669,666

PAGE 8/12 * RCVD AT 7/3/2007 8:57:14 PM [Eastern Daylight Time] * SVR:USPTO-EFXRF-1/4 * DNIS:2738300 * CSID:5097353585 * DURATION (mm-ss):04-00

RECEIVED
CENTRAL FAX CENTER
JUL 0 3 2007

UNITED STATES PATENT AND TRADEMARK OFFICE

UNDER SECRETARY OF COMMERCE FOR INTELLECTUAL PROPERTY AND
DIRECTOR OF THE UNITED STATES PATENT AND TRADEMARK OFFICE

DECEMBER 28, 2005

PTAS

103075776A

FLOYD E. IVEY
LIEBLER, IVEY, CONNOR, BERRY &
ST. HILAIRE
P.O. BOX 6125
KENNEWICK, WA 99336

UNITED STATES PATENT AND TRADEMARK OFFICE
NOTICE OF RECORDATION OF ASSIGNMENT DOCUMENT

THE ENCLOSED DOCUMENT HAS BEEN RECORDED BY THE ASSIGNMENT DIVISION OF THE U.S. PATENT AND TRADEMARK OFFICE. A COMPLETE MICROFILM COPY IS AVAILABLE AT THE ASSIGNMENT SEARCH ROOM ON THE REEL AND FRAME NUMBER REFERENCED BELOW.

PLEASE REVIEW ALL INFORMATION CONTAINED ON THIS NOTICE. THE INFORMATION CONTAINED ON THIS RECORDATION NOTICE REFLECTS THE DATA PRESENT IN THE PATENT AND TRADEMARK ASSIGNMENT SYSTEM. IF YOU SHOULD FIND ANY ERRORS OR HAVE QUESTIONS CONCERNING THIS NOTICE, YOU MAY CONTACT THE EMPLOYEE WHOSE NAME APPEARS ON THIS NOTICE AT 571-272-3350. PLEASE SEND REQUEST FOR CORRECTION TO: U.S. PATENT AND TRADEMARK OFFICE, MAIL STOP: ASSIGNMENT SERVICES DIVISION, P.O. BOX 1450, ALEXANDRIA, VA 22313.

RECORDATION DATE: 09/02/2005 REEL/FRAME: 016937/0912
NUMBER OF PAGES: 5

BRIEF: ASSIGNMENT OF ASSIGNOR'S INTEREST (SEE DOCUMENT FOR DETAILS).

ASSIGNOR:
ABLESTIEN INDUSTRIES, INC. DOC DATE: 08/24/2005

ASSIGNOR:
BEIERLE, FRED P. DOC DATE: 08/24/2005

ASSIGNEE:
CENTER FOR STRATEGIC ALLIANCE,
INC., THE
629 E. MOULTON
P.O. BOX 57
HICKMAN, KENTUCKY 42050

SERIAL NUMBER: 10669666 FILING DATE: 09/23/2003
PATENT NUMBER: ISSUE DATE:
TITLE: METHOD OF PRODUCING CHARCOAL, CONDITIONED FUEL GAS AND POTASSIUM FROM BIOMASS

PAGE 9/12 * RCVD AT 7/3/2007 8:57:14 PM [Eastern Daylight Time] * SVR:USPTO-EFXRF-1/4 * DNIS:2738300 * CSID:5097353585 * DURATION (mm-ss):04-00

016937/0912 PAGE 2

SERIAL NUMBER: 07160123 FILING DATE: 02/25/1988
PATENT NUMBER: 4846668 ISSUE DATE: 07/11/1989
TITLE: HEATING STOVE WHICH INCLUDES A PYROLYSIS GASIFIER

SERIAL NUMBER: 07159113 FILING DATE: 02/22/1988
PATENT NUMBER: 4799437 ISSUE DATE: 01/24/1989
TITLE: HEATING STOVE WHICH INCLUDES A PYROLYSIS GASIFIER

SERIAL NUMBER: 07057778 FILING DATE: 06/03/1987
PATENT NUMBER: 4738205 ISSUE DATE: 04/19/1988
TITLE: HEATING STOVE WHICH INCLUDES A PYROLYSIS GASIFIER

TARA WASHINGTON, EXAMINER
ASSIGNMENT DIVISION
OFFICE OF PUBLIC RECORDS

09-07-2005

Form PTO-1595 (Rev. 07/05) 9/25
OMB No. 0651-0027 (exp. 6/30/2008)

PARTMENT OF COMMERCE
Patent and Trademark Office

RECORD

CENTRAL FAX CENTER

103075776

PATENTS ONLY

JUL - 3 2007

To the Director of the U.S. Patent and Trademark Office: Please record the attached documents or the new address(es) below.

1. Name of conveying party(ies)

Ablestien Industries, Inc.
Fred P. Beierle

Additional name(s) of conveying party(ies) attached? ☐ Yes ☑ No

2. Name and address of receiving party(ies)

Name: The Center for Strategic Alliance, Inc.

Internal Address: P.O. Box 57

Street Address: 629 E. Moulton

City: Hickman

State: KY

Country: USA Zip: 42050

Additional name(s) & address(es) attached? ☐ Yes ☑ No

3. Nature of conveyance/Execution Date(s):

Execution Date(s) August 24, 2005

☑ Assignment ☐ Merger
☐ Security Agreement ☐ Change of Name
☐ Joint Research Agreement
☐ Government Interest Assignment
☐ Executive Order 9424, Confirmatory License
☐ Other

4. Application or patent number(s): ☐ This document is being filed together with a new application.

A. Patent Application No.(s)
10/669,666

B. Patent No.(s)
4,846,668
4,799,437
4,738,205

Additional numbers attached? ☐ Yes ☑ No

5. Name and address to whom correspondence concerning document should be mailed:

Name: Floyd E. Ivey

Internal Address: Liebler, Ivey, Connor, Berry & St. Hilaire

Street Address: P.O. Box 6125

City: Kennewick

State: WA Zip: 99336

Phone Number: (509) 735-3581

Fax Number: (509) 735-3585

Email Address: feivey@3-cities.com

6. Total number of applications and patents involved: 4

7. Total fee (37 CFR 1.21(h) & 3.41) $ 160.00

☐ Authorized to be charged by credit card
☐ Authorized to be charged to deposit account
☑ Enclosed
☐ None required (government interest not affecting title)

8. Payment Information

a. Credit Card Last 4 Numbers
Expiration Date

b. Deposit Account Number

Authorized User Name

9. Signature:

Signature

August 29, 2005
Date

Floyd E. Ivey
Name of Person Signing

Total number of pages including cover sheet, attachments, and documents: 1

Documents to be recorded (including cover sheet) should be faxed to (571) 273-0140, or mailed to:
Mail Stop Assignment Recordation Services, Director of the USPTO, P.O.Box 1450, Alexandria, V.A. 22313-1450

09/06/2005 ECOOPER 00000100 10669666

01 FC:8021 160.00 OP

O:Auto-reply fax to 50973535 COMPANY:

RECEIVED
CENTRAL FAX CENTER
JUL 0 3 2007

Auto-Reply Facsimile Transmission

TO: Fax Sender at 5097353585

Fax Information
Date Received: 2/1/2007 3:04:36 PM [Eastern Standard Time]
Total Pages: 5 (including cover page)

ADVISORY: This is an automatically generated return receipt confirmation of the facsimile transmission received by the Office. Please check to make sure that the number of pages listed as received in Total Pages above matches what was intended to be sent. Applicants are advised to retain this receipt in the unlikely event that proof of this facsimile transmission is necessary. Applicants are also advised to use the certificate of facsimile transmission procedures set forth in 37 CFR 1.8(a) and (b), 37 CFR 1.6(f). Trademark Applicants, also see the Trademark Manual of Examining Procedure (TMEP) section 306 et seq.

Received Cover Page ==========>

FEB.01'2007 12:47 5097353585 LIEBLER, IVEY & CONNOR #5760 P.001/005

OFFICIAL FILING BY FACSIMILE TRANSMISSION ON FEBRUARY 1, 2007 TO FACSIMILE #571-273-8300, FOR OFFICE OF PETITIONS AND FOR EXAMINER JENNIFER A. LEUNG, TELEPHONE 571 272 1449, ART UNIT 1764

Petition 5 pages. Our Ref. No. F-1427-001
Drawings ___ sheets
Terminal Disclaimer ___ sheet
Exhibits ___ pages
Total Fax pages ___

IN THE UNITED STATES PATENT AND TRADEMARK OFFICE

In Re Application of
SEIERLE
Serial No. 10/669,666
Filed: September 23, 2003
For: METHOD OF PRODUCING CHARCOAL, CONDITIONED GAS AND POTASSIUM FROM BIOMASS

Date: February 1, 2007
Group Art Unit: 1764
Examiner: Jennifer A. Leung

PETITION FOR ISSUANCE IN NAME OF ASSIGNEE AFTER PAYMENT OF THE ISSUE FEE

Hon. Commissioner of Patents and Trademarks
Washington, D.C. 20231

Dear Commissioner:

The applicant respectfully Petitions for Issuance in the Name of the Assignee.

The Issue fee has been paid on January 24, 2007.

The Date of Allowance is December 26, 2006.

The Assignment of this Patent is found at REEL/Frame: 016937/0912, RECORDATION DATE 09/02/2005 and is further evidenced by the RECORDATION attached hereto.

Certificate of facsimile filing on February 1, 2007 by Floyd E. Ivey, Serial No. 10/669,666.

Floyd E. Ivey, USPTO 25353

Application No. 10/669,666

1

PAGE 1/5 * RCVD AT 2/1/2007 3:04:36 PM [Eastern Standard Time] * SVR:USPTO-EFXRF-1/17 * DNIS:2738300 * CSID:5097353585 * DURATION (mm-ss):01-48

UNITED STATES PATENT AND TRADEMARK OFFICE

Commissioner for Patents
United States Patent and Trademark Office
P.O. Box 1450
Alexandria, VA 22313-1450
www.uspto.gov

Henri Duong
316 1/2 E Glendon Way
Alhambra CA 91801

COPY MAILED

FEB 26 2009

OFFICE OF PETITIONS

In re Application of :
Henry Duong :
Application No. 10/669,668 : ON PETITION
Filed: September 23, 2003 :
Attorney Docket No.

This is regarding the letter filed January 22, 2009, which will be treated as a petition under 37 CFR 1.181 to withdraw the holding of abandonment.

The petition is **DISMISSED**.

The application became abandoned on November 17, 2007, after a proper response was not received to the Notice of Non-Compliant Appeal Brief mailed October 16, 2007, which set a shortened period for reply of one-months from its mailing date. A Notice of Abandonment was mailed April 30, 2008.

In the instant petition, petitioner maintains that the holding of abandonment was improper.

A review of the application file reveals that a Notice of Non-Complaint Appeal Brief was mailed on October 16, 2007. Communications were filed on January 25, 2008, February 19, 2008, and February 22, 2008, none of which were proper responses to the Notice of Non-Compliant Appeal Brief. On May 1, 2008, applicant filed an Appeal Brief and a Notice of Appeal that were not accompanied by the request for extension of time within the fifth month that would have been necessary to make the response timely. The application was properly held abandoned on November 17, 2007, because a proper and timely response to the Notice of Non-Compliant Appeal Brief was not filed within the allowable period. The petition is dismissed, accordingly.

Alternatively, petitioner may revive the application based on unintentional abandonment under 37 CFR 1.137(b) (enclosed). A grantable petition pursuant to 37 CFR 1.137(b) must be accompanied by the required reply, the required petition fee ($1,620.00 for a large entity or $810.00 for a verified small entity), and a statement that the **entire** delay in filing the required reply from the due date for the reply until the filing of a grantable petition pursuant to 37 CFR 1.137(b) was unintentional.

Further correspondence with respect to this matter should be addressed as follows:

By mail: Commissioner for Patents
United States Patent and Trademark Office
Box 1450
Alexandria, VA 22313-1450

By facsimile: (571) 273-8300
Attn: Office of Petitions

Inquiries regarding the sufficiency of the reply to the Notice of Non-Compliant Appeal Brief should be directed to the Technology Center. Telephone inquiries concerning this decision should be directed to the undersigned (571) 272-3222.

Kenya A. McLaughlin
Petitions Attorney
Office of Petitions

Enclosure: Form PTO/SB/64

UNITED STATES PATENT AND TRADEMARK OFFICE

Commissioner for Patents
United States Patent and Trademark Office
P.O. Box 1450
Alexandria, VA 22313-1450
www.uspto.gov

Henri Duong
316 1/2 E Glendon Way
Alhambra CA 91801

COPY MAILED

APR 1 0 2009

OFFICE OF PETITIONS

In re Application of :
Henry Duong :
Application No. 10/669,668 : ON PETITION
Filed: September 23, 2003 :
Attorney Docket No.

This is a decision on the renewed petition under 37 CFR 1.181 to withdraw the holding of abandonment, filed March 5, 2009.

The renewed petition is **DISMISSED**.

The application became abandoned on November 17, 2007, after a proper response was not received to the Notice of Non-Compliant Appeal Brief mailed October 16, 2007, which set a shortened period for reply of one-months from its mailing date. A Notice of Abandonment was mailed April 30, 2008.

In the instant petition, petitioner maintains that the holding of abandonment was improper.

A review of the application file reveals that a Notice of Non-Complaint Appeal Brief was mailed on October 16, 2007. Communications were filed on January 25, 2008, February 19, 2008, and February 22, 2008, none of which were proper responses to the Notice of Non-Compliant Appeal Brief. On May 1, 2008, applicant filed an Appeal Brief and a Notice of Appeal that were not accompanied by the request for extension of time within the fifth month that would have been necessary to make the response timely. The application was properly held abandoned on November 17, 2007, because a proper and timely response to the Notice of Non-Compliant Appeal Brief was not filed within the allowable period. The renewed petition does not present any additional facts or circumstances that would allow the undersigned to reach a different conclusion. The petition is dismissed, accordingly.

It is noted that petitioner indicates that the examiner's purported delay in responding to petitioner's filings contributed to the abandonment of the application. Review of the application file history reveals that the examiner held two telephonic interviews with the petitioner and provided responses to applicant's filings in what is, arguably, a reasonable period. Petitioner is advised that all applicant's are charged with making a *bona fide* effort to diligently and swiftly prosecute the application. Petitioner is charged with a filing a proper and timely response to all Office actions issued. If is a reply is ultimately determined to be improper, such does not toll any time period running against the application. The holding of abandonment was properly imposed because neither a proper response to the final Office action nor the Notice of Non-Compliant Appeal Brief was received within the maximum statutory period for reply.

Alternatively, petitioner may revive the application based on unintentional abandonment under 37 CFR 1.137(b). A grantable petition pursuant to 37 CFR 1.137(b) must be accompanied by the required reply, the required petition fee ($1,620.00 for a large entity or $810.00 for a verified

small entity), and a statement that the **entire** delay in filing the required reply from the due date for the reply until the filing of a grantable petition pursuant to 37 CFR 1.137(b) was unintentional.

Further correspondence with respect to this matter should be addressed as follows:

By mail: Commissioner for Patents
United States Patent and Trademark Office
Box 1450
Alexandria, VA 22313-1450

By facsimile: (571) 273-8300
Attn: Office of Petitions

Inquiries regarding the sufficiency of the reply to the Notice of Non-Compliant Appeal Brief should be directed to the Technology Center. Telephone inquiries concerning this decision should be directed to the undersigned (571) 272-3222.

Kenya A. McLaughlin
Petitions Attorney
Office of Petitions

SPE RESPONSE FOR CERTIFICATE OF CORRECTION

Paper No.:20080828

DATE : August 28, 2008

TO SPE OF : ART UNIT 2612

SUBJECT : Request for Certificate of Correction on Patent No.: 7081815

A response is requested with respect to the accompanying request for a certificate of correction.

Please complete this form and return with file, within **7** days to:
Certificates of Correction Branch - ST (South Tower) 9A22
Palm location **7590** - Tel. No. (703) 305-8309

With respect to the change(s) requested, correcting Office and/or Applicant's errors, should the patent read as shown in the certificate of correction? No new matter should be introduced, nor should the scope or meaning of the claims be changed.

Thank You For Your Assistance **Certificates of Correction Branch**

The request for issuing the above-identified correction(s) is hereby:

Note your decision on the appropriated box.

☒ **Approved** All changes apply.

☐ **Approved in Part** Specify below which changes **do not** apply.

☐ **Denied** State the reasons for denial below.

Comments:

OK to enter.

/DANIEL WU/
Supervisory Patent Examiner.Art Unit 2612

UNITED STATES PATENT AND TRADEMARK OFFICE

UNITED STATES DEPARTMENT OF COMMERCE
United States Patent and Trademark Office
Address: COMMISSIONER FOR PATENTS
P.O. Box 1450
Alexandria, Virginia 22313-1450
www.uspto.gov

APPL NO.	FILING OR 371 (c) DATE	ART UNIT	FIL FEE REC'D	ATTY.DOCKET NO	DRAWINGS	TOT CLMS	IND CLMS
10/669,673	09/24/2003	2176	1296	A2002008(2)	2	27	8

CONFIRMATION NO. 8187

CORRECTED FILING RECEIPT

OC000000011768232

26643
PETER J. GORDON, PATENT COUNSEL
AVID TECHNOLOGY, INC.
ONE PARK WEST
TEWKSBURY, MA 01876

Date Mailed: 01/27/2004

Receipt is acknowledged of this regular Patent Application. It will be considered in its order and you will be notified as to the results of the examination. Be sure to provide the U.S. APPLICATION NUMBER, FILING DATE, NAME OF APPLICANT, and TITLE OF INVENTION when inquiring about this application. Fees transmitted by check or draft are subject to collection. Please verify the accuracy of the data presented on this receipt. **If an error is noted on this Filing Receipt, please write to the Office of Initial Patent Examination's Filing Receipt Corrections, facsimile number 703-746-9195. Please provide a copy of this Filing Receipt with the changes noted thereon. If you received a "Notice to File Missing Parts" for this application, please submit any corrections to this Filing Receipt with your reply to the Notice. When the USPTO processes the reply to the Notice, the USPTO will generate another Filing Receipt incorporating the requested corrections (if appropriate).**

Applicant(s)

Peter J. Fasciano, Natick, MA;

Domestic Priority data as claimed by applicant

This appln claims benefit of 60/319,571 09/24/2002

Foreign Applications

If Required, Foreign Filing License Granted: 12/15/2003

Projected Publication Date: 03/25/2004

Non-Publication Request: No

Early Publication Request: No

Title

Exhibition of digital media assets from a digital media asset management system to facilitate creative story generation

Preliminary Class

715

LICENSE FOR FOREIGN FILING UNDER
Title 35, United States Code, Section 184
Title 37, Code of Federal Regulations, 5.11 & 5.15

GRANTED

The applicant has been granted a license under 35 U.S.C. 184, if the phrase "IF REQUIRED, FOREIGN FILING LICENSE GRANTED" followed by a date appears on this form. Such licenses are issued in all applications where the conditions for issuance of a license have been met, regardless of whether or not a license may be required as set forth in 37 CFR 5.15. The scope and limitations of this license are set forth in 37 CFR 5.15(a) unless an earlier license has been issued under 37 CFR 5.15(b). The license is subject to revocation upon written notification. The date indicated is the effective date of the license, unless an earlier license of similar scope has been granted under 37 CFR 5.13 or 5.14.

This license is to be retained by the licensee and may be used at any time on or after the effective date thereof unless it is revoked. This license is automatically transferred to any related applications(s) filed under 37 CFR 1.53(d). This license is not retroactive.

The grant of a license does not in any way lessen the responsibility of a licensee for the security of the subject matter as imposed by any Government contract or the provisions of existing laws relating to espionage and the national security or the export of technical data. Licensees should apprise themselves of current regulations especially with respect to certain countries, of other agencies, particularly the Office of Defense Trade Controls, Department of State (with respect to Arms, Munitions and Implements of War (22 CFR 121-128)); the Office of Export Administration, Department of Commerce (15 CFR 370.10 (j)); the Office of Foreign Assets Control, Department of Treasury (31 CFR Parts 500+) and the Department of Energy.

NOT GRANTED

No license under 35 U.S.C. 184 has been granted at this time, if the phrase "IF REQUIRED, FOREIGN FILING LICENSE GRANTED" DOES NOT appear on this form. Applicant may still petition for a license under 37 CFR 5.12, if a license is desired before the expiration of 6 months from the filing date of the application. If 6 months has lapsed from the filing date of this application and the licensee has not received any indication of a secrecy order under 35 U.S.C. 181, the licensee may foreign file the application pursuant to 37 CFR 5.15(b).

UNITED STATES PATENT AND TRADEMARK OFFICE

Commissioner for Patents
United States Patent and Trademark Office
P.O. Box 1450
Alexandria, VA 22313-1450
www.uspto.gov

MAILED

JUN 0 8 2009

OFFICE OF PETITIONS

SUN MICROSYSTEMS/FINNEGAN, HENDERSON LLP
901 NEW YORK AVENUE, NW
WASHINGTON, DC 20001-4413

In re Application of	:	
Brian T. Murphy, et al.	:	
Application No. 10/669,692	:	DECISION ON PETITION
Filed: September 25, 2003	:	
Attorney Docket No. 6502-0259-04	:	

This is a decision on the petition under the unintentional provisions of 37 CFR 1.137(b), filed April 23, 2009, to revive the above-identified application.

There is no indication that the person signing the instant petition was ever given a power of attorney or authorization of agent to prosecute the above-identified application. In accordance with 37 CFR 1.34(a), the signature appearing on the petition shall constitute a representation to the United States Patent and Trademark Office that he/she is authorized to represent the particular party in whose behalf he/she acts. However, if petitioner desires to receive future correspondence regarding this application, the appropriate power of attorney or authorization of agent must be submitted. A courtesy copy of this decision is being mailed to petitioner. Nevertheless, all future correspondence regarding this application file will be directed solely to the address of record until otherwise instructed.

It is not apparent whether the statement of unintentional delay was signed by a person who would have been in a position of knowing that the entire delay in filing the required reply from the due date for the reply until the filing of a grantable petition pursuant to 37 CFR 1.137(b) was unintentional. Nevertheless, in accordance with 37 CFR 10.18, the statement is accepted as constituting a certification of unintentional delay. However, in the event that petitioner has no knowledge that the delay was unintentional, petitioner must make such an inquiry to ascertain that, in fact, the delay was unintentional. If petitioner discovers that the delay was intentional, petitioner must so notify the Office.

The application became abandoned for failure to reply in a timely manner to the Notice of Non-Compliant Amendment, mailed October 14, 2008 , which set a shortened statutory period for reply of one (1) month or thirty (30) days (whichever is later). No extensions of time under the provisions of 37 CFR 1.136(a) were obtained. Accordingly, the application became abandoned on November 15, 2008.

The petition satisfies the requirements of 37 CFR 1.137(b) in that petitioner has supplied (1) the reply in the form of an amendment, (2) the petition fee of $1620, and (3) a proper statement of unintentional delay.

The petition is **GRANTED**.

Telephone inquiries concerning this decision should be directed to undersigned at (571) 272-1642. All other inquiries concerning the examination or status of this application should be directed to the Technology Center.

This application is being referred to Technology Center AU 2455 for appropriate action by the Examiner in the normal course of business on the reply received April 23, 2009.

April M. Wise
Petitions Examiner
Office of Petitions

Cc: MICHAEL L. DAY
PO BOX 061080
WACKER DRIVE STATION
SEARS TOWER
CHICAGO, IL 60606-1080

UNITED STATES PATENT AND TRADEMARK OFFICE

Commissioner for Patents
United States Patent and Trademark Office
P.O. Box 1450
Alexandria, VA 22313-1450
www.uspto.gov

KEATING & BENNETT, LLP
8180 GREENSBORO DRIVE
SUITE 850
MCLEAN, VA 22102

COPY MAILED

SEP 09 2005

OFFICE OF PETITIONS

In re Application of :
Gaku Kamitani :
Application No. 10/669,695 : ON PETITION
Filed: September 25, 2003 :
Attorney Docket No. 36856.1128 :

This is a decision on the petition under 37 CFR 1.137(b), filed June 23, 2005, to revive the above-identified application.

The petition is **GRANTED.**

The above-identified application became abandoned for failure to submit the issue fee in a timely manner in reply to the Notice of Allowance mailed March 16, 2005, which set a statutory period for reply of three (3) months. Accordingly, the above-identified application became abandoned on June 17, 2005.

The petition satisfies the conditions for revival pursuant to the provisions of 37 CFR 1.137(b) in that (1) the reply in the form of payment of the issue fee; (2) the petition and publication fees; and (3) the required statement of unintentional delay have been received. Accordingly, the issue fee is accepted as having been unintentionally delayed.

Telephone inquiries concerning this decision should be directed to the undersigned at (571) 272-3229.

This application matter is being forwarded to the Publishing Division for further processing.

Retta Williams

Retta Williams
Petitions Examiner
Office of Petitions
Office of the Deputy Commissioner
for Patent Examination Policy

UNITED STATES PATENT AND TRADEMARK OFFICE

Commissioner for Patents
United States Patent and Trademark Office
P.O. Box 1450
Alexandria, VA 22313-1450
www.uspto.gov

CARDINAL LAW GROUP
Caliper Life Sciences, Inc.
1603 Orrington Avenue, Suite 2000
Evanston IL 60201

COPY MAILED

JUN 1 3 2008

OFFICE OF PETITIONS

In re Application of :
Chen et al. :
Application No. 10/669,705 :
Filed: 09/25/2003 :
Attorney Docket No. 900/00420 :

DECISION ON PETITION

This is a decision on the petition under 37 CFR 1.137(b), filed May 12, 2008, to revive the above-identified application.

The petition is GRANTED.

On July 9, 2007, the Office mailed a final Office action, which set a three-month shortened statutory period to reply. The proposed reply required for consideration of a petition to revive must be a Notice of Appeal (and appeal fee required by 37 CFR 41.20(b)(2), an amendment that *prima facie* places the application in condition for allowance, a Request for Continued Examination (RCE) and submission (37 CFR 1.114), or the filing of a continuing application under 37 CFR 1.53(b). See MPEP 711.03(c)(III)(A)(2). In the absence of a timely and proper reply, the Office mailed a Notice of Abandonment on April 1, 2008.

The petition satisfies the requirements of 37 CFR 1.137(b) in that applicant has supplied (1) the reply in the form of a RCE, the RCE fee and the submission required by 37 CFR 1.114; (2) the petition fee; and (3) a proper statement of unintentional delay.

Telephone inquiries concerning this decision should be directed to the undersigned at (571) 272-3211.

This application is being referred to Technology Center AU 1631 for processing of the RCE and for appropriate action by the Examiner in the normal course of business on the amendment submitted in accordance with 37 CFR 1.114.

C. T. Donnell

Christina Tartera Donnell
Senior Petitions Attorney
Office of Petitions

UNITED STATES PATENT AND TRADEMARK OFFICE

Commissioner for Patents
United States Patent and Trademark Office
P.O. Box 1450
Alexandria, VA 22313-1450
www.uspto.gov

FEB 17 2006

In re Application of: Park, et al.	:
Appl. No.: 10/669,747	: DECISIONS ON PETITIONS
Filed: 25 September 2003	:
For: A Packing Crate	:

This is responsive to the petitions filed on 1) December 2, 2004 by which petitioners request supervisory review of the Examiner's failure to acknowledge the filing and receipt of the certified Korean priority application No. 2003-52691; 2) October 27, 2005 by which petitioners request supervisory review of the Examiner's failure to provide a complete non-final Office action by not citing U.S. Patent No. 3,850,362 on form USPTO-892; and 3) November 1, 2005 by which petitioners request supervisory review of the restriction requirement rendered in paper No. 20050524 mailed May 31, 2005, traversed by petitioners on June 9, 2005 and finalized by the Examiner in paper No. 20050904 mailed September 9, 2005. These petitions are considered pursuant to 37 CFR 1.144 and 37 CFR 1.181, and no fee is required.

The petition filed on December 2, 2004 is granted.

Review of the application prosecution history reveals that the relief requested by the petitioners was in fact satisfied in the subsequent Office action, paper No. 20041112, mailed on November 17, 2004.

The petition filed on October 27, 2005 is denied.

In accordance with the MPEP, section 710.06, when an applicant's ability to respond to an Office action is impaired by the lack of a proper reference citation, the period for response will be extended. Here, since the Stollberg et al. reference - Patent No. 3,850,362 – was cited in the body of the Office action, Applicant could have easily accessed the reference through the use of PAIRS, and responded to the Office action within the set statutory period for response. The oversight on the part of the Examiner is considered a mere formality in this case that should not have affected the line of communication between Applicant and the Examiner.

For petitioners' convenience, a copy of section 710.06 of the MPEP is reproduced hereinbelow.

710.06 [R-3] Situations When Reply Period Is Reset or Restarted

Where the citation of a reference is incorrect or an Office action contains some other *>error that affects applicant's ability to reply to the Office action< and this error is called to the attention of the Office within 1 month of the mail date of the action, the Office will restart the previously set period for reply to run from the date the error is corrected, if requested to do so by applicant. If the error is brought to the attention of the Office within the period for reply set in the Office action but more than 1 month after the date of the Office action, the Office will set a new period for reply, if requested to do so by the applicant, to substantially equal the time remaining in the reply period. For example, if the error is brought to the attention of the Office 5 weeks after mailing the action, then the Office would set a new 2-month period for reply. The new period for reply must be at least 1 month and would run from the date the error is corrected. See MPEP § 707.05(g) for the manner of correcting the record where there has been an erroneous citation.

The petition filed on November 1, 2005 is granted.

On November 17, 2004, the Examiner rendered a first Office action (paper No. 20041112) rejecting originally filed claims 1-18. On March 14, 2005, Applicants responded by filing an amendment amending certain claims, cancelling claim 10 and adding new claims 19-21. On May 31, 2005, the Examiner rendered a written restriction requirement (paper No. 20050524) between claims 1-18, not addressing cancelled claim 10, nor newly added claims 19-21. On June 9, 2005, Applicants traversed the restriction requirement. On September 9, 2005, the Examiner rendered a non-final Office action (paper No. 20050904) wherein the restriction requirement was made final.

The petitioners opine that the restriction requirement was improperly imposed for several reasons.

Firstly, the petitioners rely on the MPEP section 811, which states:

811 [R-3] Time for Making Requirement

37 CFR 1.142(a), second sentence, **>indicates that a restriction requirement "will normally< be made before any action upon the merits; however, it may be made at any time before final action **." This means the examiner should make a proper requirement as early as possible in the prosecution, in the first action if possible, otherwise, as soon as the need for a proper requirement develops.

Before making a restriction requirement after the first action on the merits, the examiner will consider whether there will be a serious burden if restriction is not required.

Although a restriction requirement could be made any time before final, the Examiner rendered a first Office action on all the claims presumed to be thoroughly searched in all the appropriate areas. Since no indication on the record was made of how a serious burden exists by having to examine all the claims, the Examiner has not met the requirements for making a restriction in this case. Referring to the reasons given in paper No. 20050904, the Examiner states, "it is noted method claims is required further required to be searched in class 493. Thus, this would have a serious burden on the examiner." The title of class 493, subclass 84 where the examiner classified the method claims is "Container making – assembling distinct members". This and other subclasses (e.g., 121, 136 and particularly 140) appear to be very pertinent searches in determining the patentability of the method as well as the product claims. For this reason alone, the restriction requirement is improper and will be withdrawn.

Secondly, petitioners contend that MPEP 806.03 mandates that a patent application must never be restricted when only a single embodiment is disclosed and claimed. In the instant case, there is only one packing crate described and claimed by a series of product-by-process claims and method of making claims, which would be restrictable if the criteria for distinctness therebetween could be properly satisfied. In this case, the Examiner has not satisfied such criteria. In the Office action of paper No. 20050524, the Examiner states "In the instant case, the product as claimed can be made by other methods, the sewing can be done by hand, or before the application of adhesive as set forth in claims 7, 8 or 9." However, the process as claimed does not require any specific method of sewing. Also, it would be impossible to apply adhesive to the folded over portion of the first stack after it has been sewn to the second stack. Claim 8 clearly calls for the sewing to be done after the application of adhesive. Therefore, since the Examiner has not satisfied the criteria for distinctness, the restriction requirement is improper and will be withdrawn.

For the reasons outlined above, the restriction requirement promulgated and construed as being made final is not in accordance with proper Office procedure. Accordingly, the Office action rendered in paper No. 20050904 is hereby vacated.

As a further procedural note, as this petition grants Petitioner relief from the restriction requirement, the amendment presented June 9, 2005 is deemed responsive to which a new Office action will be rendered. The application is being forwarded to the Supervisory Patent Examiner of Art Unit 3727 who will have the examiner promulgate an action on the merits of the presently pending claims not inconsistent with this Decision.

PETITION GRANTED

Frederick R. Schmidt, Director
Technology Center 3700

James A. Flight
HANLEY, FLIGHT & ZIMMERMAN, LLC
Suite 4220
20 North Wacker Drive
Chicago, Illinois 60606

UNITED STATES PATENT AND TRADEMARK OFFICE

Commissioner for Patents
United States Patent and Trademark Office
P.O. Box 1450
Alexandria, VA 22313-1450
www.uspto.gov

SEP 18 2006

In re Application of: Park, et al.
Appl. No.: 10/669,747
Filed: 25 September 2003
For: A Packing Crate

: DECISIONS ON PETITIONS

This is responsive to the petitions filed on July 24, 2006 by which petitioners request supervisory review and withdrawal of the restriction requirement rendered in paper No. 20060515 mailed May 18, 2006. In accordance with 37 CFR 1.144, an applicant may petition the Director to review a final requirement for restriction. Although this restriction requirement has not been made final, in order to expedite the prosecution of this case, this petition is being considered as if pursuant to 37 CFR 1.144 and 37 CFR 1.181, and no fee is required.

The petition is granted.

The undersigned is fully aware of the petition filed by Applicant on November 1, 2005, which was granted on February 17, 2006. Response to this petition is made in light of the issues resolved in the previous petition.

Aside from the fact that it is presumed that the Examiner has made a thorough search and examination of all the originally submitted claims, which encompassed the disclosed product and method of making the product, the rationale rendered in justifying restriction in paper No. 20060515 cannot be maintained.

In showing distinctness between the method of making claims 7-9 and the product claims 22-37, the Examiner states, "the method claim require a folding over the strip at an edge of the stack of paper while the article claims does not require this step thus making the inventions I and II distinct". Quite to the contrary, article claims 28 and 29 do require the "folded over strip" feature. The Examiner further states, "the container can be made by other method like immersing the threads with adhesive prior to sewing". However, the Examiner has not provided any further convincing reasoning of how immersing the threads in adhesive prior to sewing would result in the package crate as set forth in the claims.

As stated in the response to Applicants' previous petition, by rendering a first Office action on all the claims it is presumed that the Examiner performed a thorough search in all the appropriate areas. Since the latest restriction requirement again makes no indication on the record of how a serious burden exists by having to examine all the claims, the Examiner again has not met the requirements for making a restriction in this case. The Examiner merely states that the inventions have acquired a separate status in the art in view of their different classification. The title of class 493, subclass 84 where the examiner classified the method claims is "Container making –

assembling distinct members". This and other subclasses (e.g., 121, 136 and particularly 140) appear to be very pertinent searches in determining the patentability of the method as well as the product claims. For this reason and those discussed supra, the restriction requirement is improper and will be withdrawn.

For the reasons outlined above, the restriction requirement rendered in paper No. 20060515 is not in accordance with proper Office procedure and hereby vacated.

The application is being forwarded to the Supervisory Patent Examiner of Art Unit 3727 who will have the Examiner promulgate an action on the merits of all of the presently pending claims not inconsistent with this Decision.

PETITION GRANTED

Frederick R. Schmidt, Director
Technology Center 3700

Robert E. Bushnell
Suite 300
1522 K Street, N.W.
Washington, DC 20005

OK TO ENTER: /J.W./

WORKMAN | NYDEGGER
INTELLECTUAL PROPERTY ATTORNEYS

1000 EAGLE GATE TOWER, 60 EAST SOUTH TEMPLE | SALT LAKE CITY, UTAH 84111
TEL: (801) 533-9800 | FAX: (801) 328-1707 | WWW.WNLAW.COM

OIPE IAP76
MAY 09 2008
PATENT & TRADEMARK OFFICE

PATENT
Docket No. 15865.10a.1

IN THE UNITED STATES PATENT AND TRADEMARK OFFICE

In re application of

	Zhurong et al.	
Serial No.:	10/669,756	
Filed:	Sep. 24, 2003	Art Unit 3637
For:	FOLDING TABLE	
Examiner:	Janet M. Wilkins	
Patent No.:	7,278,361 B2	
Issue Date:	Oct. 9, 2007	

REQUEST FOR A CERTIFICATE OF CORRECTION
UNDER 37 C.F.R. § 1.323

Attn: Certificate of Correction Branch
Commissioner for Patents
P.O. Box 1450
Alexandria, VA 22313–1450

Certificate
MAY 13 2008
of Correction

Sir:

In accordance with the provisions of 37 C.F.R. § 1.323 which implement 35 U.S.C. § 255, the Commissioner is respectfully requested to issue a Certificate of Correction to correct mistakes in the above-identified patent. The enclosed Patent Office Form 1050 reflects the desired corrections. Also enclosed please find a check in the amount of $100.00 to cover the costs for issuance of this certificate.

05/09/2008 CCHAU1 00000067 7278756
01 FC:1811 100.00 OP

RECEIVED-USPTO
Patent Publication
MAY 13 2008

The Commissioner is hereby authorized to charge payment of any fees associated with this communication or credit any overpayment to Deposit Account No. 23–3178. Duplicate copies of this letter are enclosed.

Dated this 5 day of May, 2008.

Respectfully submitted,

Richard C. Gilmore
Attorney for Patentee
Registration No. 37,335
Customer No. 022913

RCG:jsb
Docket No. 15865.10a.1
Certificate of Correction Documents (with check)

CERTIFICATE OF DEPOSIT UNDER 37 C.F.R. § 1.8

I hereby certify that this correspondence is being deposited with the United States Postal Service as first class mail, postage prepaid, in an envelope addressed to: Commissioner for Patents, P.O. Box 1450, Alexandria, VA 22313–1450, on this 6 day of May, 2008.

Transmitted: REQUEST FOR A CERTIFICATE OF CORRECTION UNDER 37 C.F.R. § 1.323, PTO Form 1050 and Check No. 157789 for $100.00

RECEIVED-USPTO
Patent Publication
MAY 13 2008

WORKMAN | NYDEGGER
INTELLECTUAL PROPERTY ATTORNEYS

1000 EAGLE GATE TOWER, 60 EAST SOUTH TEMPLE | SALT LAKE CITY, UTAH 84111
TEL: (801) 533-9800 | FAX: (801) 328-1707 | WWW.WNLAW.COM

OIPE IAP76
MAY 09 2008
PATENT & TRADEMARK OFFICE

PATENT
Docket No. 15865.10a.1

IN THE UNITED STATES PATENT AND TRADEMARK OFFICE

In re application of

	Zhurong et al.	
Serial No.:	10/669,756	Art Unit 3637
Filed:	Sep. 24, 2003	
For:	FOLDING TABLE	
Examiner:	Janet M. Wilkins	
Patent No.:	7,278,361 B2	
Issue Date:	Oct. 9, 2007	

REQUEST FOR A CERTIFICATE OF CORRECTION
UNDER 37 C.F.R. § 1.323

Attn: Certificate of Correction Branch
Commissioner for Patents
P.O. Box 1450
Alexandria, VA 22313–1450

Sir:

In accordance with the provisions of 37 C.F.R. § 1.323 which implement 35 U.S.C. § 255, the Commissioner is respectfully requested to issue a Certificate of Correction to correct mistakes in the above-identified patent. The enclosed Patent Office Form 1050 reflects the desired corrections. Also enclosed please find a check in the amount of $100.00 to cover the costs for issuance of this certificate.

RECEIVED-USPTO
Publication
MAY 13 2008

The Commissioner is hereby authorized to charge payment of any fees associated with this communication or credit any overpayment to Deposit Account No. 23–3178. Duplicate copies of this letter are enclosed.

Dated this 5 day of May, 2008.

Respectfully submitted,

Richard C. Gilmore
Attorney for Patentee
Registration No. 37,335
Customer No. 022913

RCG:jsb
Docket No. 15865.10a.1
Certificate of Correction Documents (with check)

CERTIFICATE OF DEPOSIT UNDER 37 C.F.R. § 1.8

I hereby certify that this correspondence is being deposited with the United States Postal Service as first class mail, postage prepaid, in an envelope addressed to: Commissioner for Patents, P.O. Box 1450, Alexandria, VA 22313–1450, on this 6 day of May, 2008.

Transmitted: REQUEST FOR A CERTIFICATE OF CORRECTION UNDER 37 C.F.R. § 1.323, PTO Form 1050 and Check No. 157789 for $100.00

RECEIVED
Patent Publication
MAY 13 2008

DOC Code: COCIN

PTO/SB/44 (04-05)
Approved for use through 04/30/2007. OMB 0651-0033
U.S. Patent and Trademark Office; U.S. DEPARTMENT OF COMMERCE
Under the Paperwork Reduction Act of 1995, no persons are required to respond to a collection of information unless it displays a valid OMB control
(Also Form PTO-1050)

UNITED STATES PATENT AND TRADEMARK OFFICE

CERTIFICATE OF CORRECTION

PATENT NO. : 7,278,361 B2

Page 1 of 3

APPLICATION NO. : 10/669,756

ISSUE DATE : Oct. 9, 2007

INVENTOR(S) : Zhurong et al.

It is certified that error appears in the above-identified patent and that said Letters Patent is hereby corrected as shown below:

Drawings

Sheet 6, replace Fig. 9 with the figure depicted herein below, wherein the hinge axis has been labeled --203--

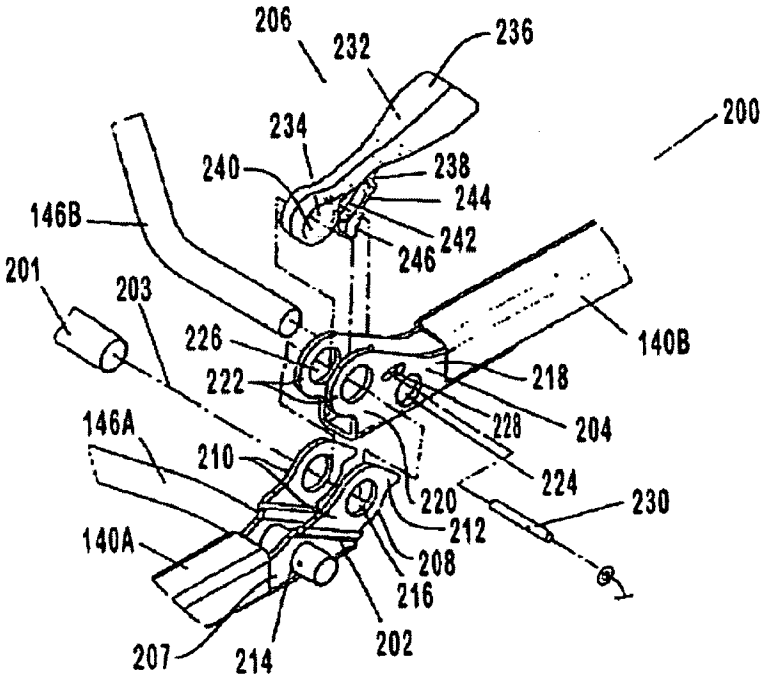

Fig. 9

MAILING ADDRESS OF SENDER (Please do not use customer number

Richard C. Gilmore, Esq., WORKMAN NYDEGGER
1000 Eagle Gate Tower
60 East South Temple
Salt Lake City, Utah 84111

This collection of information is required by 37 CFR 1.322, 1.323, and 1.324. The information is required to obtain or retain a benefit by the public which is to file (and by the USPTO to process) an application. Confidentiality is governed by 35 U.S.C. 122 and 37 CFR 1.14. This collection is estimated to take 1.0 hour to complete, including gathering, preparing, and submitting the completed application form to the USPTO. Time will vary depending upon the individual case. Any comments on the amount of time you require to complete this form and/or suggestions for reducing the burden, should be sent to the Chief Information Officer, U.S. Patent and Trademark Office, U.S. Department of Commerce, P.O. Box 1450, Alexandria, VA 22313-1450. DO NOT SEND FEES OR COMPLETED FORMS TO THIS ADDRESS. **SEND TO: Attention Certificate of Corrections Branch, Commissioner for Patents, P.O. Box 1450, Alexandria, VA 22313-1450.**

MAY 13 2008

If you need assistance in completing the form, call 1-800-PTO-9199 and select option 2.

DOC Code: COCIN

PTO/SB/44 (04-05)
Approved for use through 04/30/2007. OMB 0651-0033
U.S. Patent and Trademark Office; U.S. DEPARTMENT OF COMMERCE
Under the Paperwork Reduction Act of 1995, no persons are required to respond to a collection of information unless it displays a valid OMB control
(Also Form PTO-1050)

UNITED STATES PATENT AND TRADEMARK OFFICE

CERTIFICATE OF CORRECTION

PATENT NO. : 7,278,361 B2

APPLICATION NO. : 10/669,756

ISSUE DATE : Oct. 9, 2007

INVENTOR(S) : Zhurong et al.

It is certified that error appears in the above-identified patent and that said Letters Patent is hereby corrected as shown below:

Drawings

Sheet 9, replace Figure 14 with the figure depicted herein below, wherein the reference for the first hinge connector has been changed from "1211" to --121--

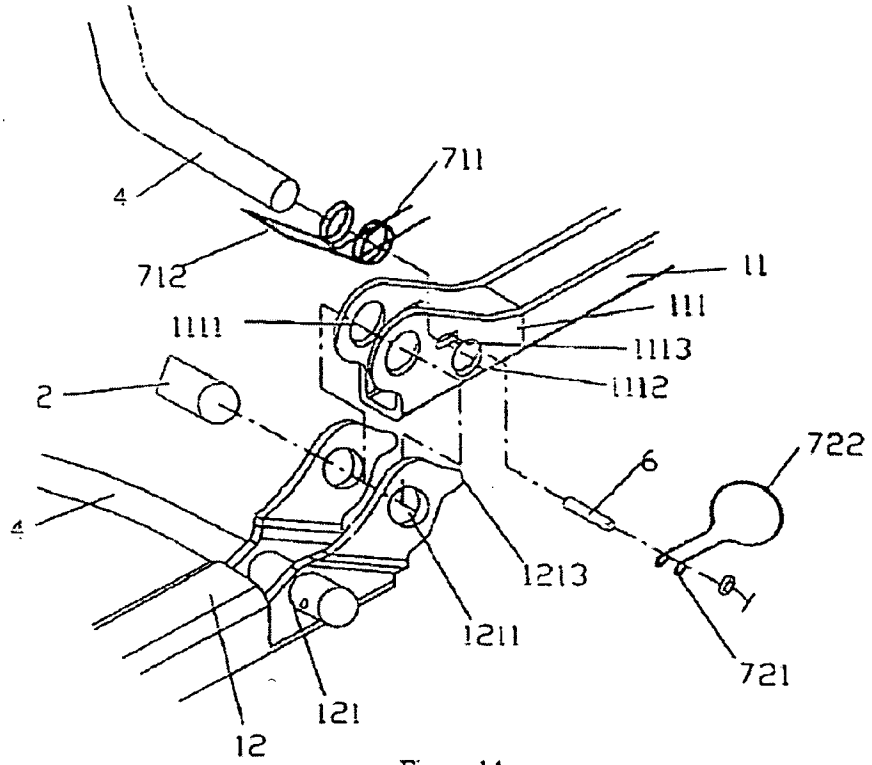

Figure 14

MAILING ADDRESS OF SENDER (Please do not use customer number

Richard C. Gilmore, Esq., WORKMAN NYDEGGER
1000 Eagle Gate Tower
60 East South Temple
Salt Lake City, Utah 84111

This collection of information is required by 37 CFR 1.322, 1.323, and 1.324. The information is required to obtain or retain a benefit by the public which is to file (and by the USPTO to process) an application. Confidentiality is governed by 35 U.S.C. 122 and 37 CFR 1.14. This collection is estimated to take 1.0 hour to complete, including gathering, preparing, and submitting the completed application form to the USPTO. Time will vary depending upon the individual case. Any comments on the amount of time you require to complete this form and/or suggestions for reducing the burden, should be sent to the Chief Information Officer, U.S. Patent and Trademark Office, U.S. Department of Commerce, P.O. Box 1450, Alexandria, VA 22313-1450. DO NOT SEND FEES OR COMPLETED FORMS TO THIS ADDRESS. **SEND TO: Attention: Certificate of Corrections Branch, Commissioner for Patents, P.O. Box 1450, Alexandria, VA 22313-1450.**

If you need assistance in completing the form, call 1-800-PTO-9199 and select option 2.

MAY 13 2008

DOC Code: COCIN

PTO/SB/44 (04-05)
Approved for use through 04/30/2007. OMB 0651-0033
U.S. Patent and Trademark Office; U.S. DEPARTMENT OF COMMERCE
Under the Paperwork Reduction Act of 1995, no persons are required to respond to a collection of information unless it displays a valid OMB control
(Also Form PTO-1050)

UNITED STATES PATENT AND TRADEMARK OFFICE

CERTIFICATE OF CORRECTION

PATENT NO. : 7,278,361 B2

APPLICATION NO. : 10/669,756

ISSUE DATE : Oct. 9, 2007

INVENTOR(S) : Zhurong et al.

It is certified that error appears in the above-identified patent and that said Letters Patent is hereby corrected as shown below:

Column 8
Line 65, after "exterior end", change "152" to --154--

Column 11
Line 15, change "embodiment" to --embodiments--

Column 13
Line 26, change "When reference" to --With reference--

Column 16
Line 5, change "203" to --201--

Column 18
Line 9, after "table top", insert --; and--

MAILING ADDRESS OF SENDER (Please do not use customer number

Richard C. Gilmore, Esq., WORKMAN NYDEGGER
1000 Eagle Gate Tower
60 East South Temple
Salt Lake City, Utah 84111

This collection of information is required by 37 CFR 1.322, 1.323, and 1.324. The information is required to obtain or retain a benefit by the public which is to file (and by the USPTO to process) an application. Confidentiality is governed by 35 U.S.C. 122 and 37 CFR 1.14. This collection is estimated to take 1.0 hour to complete, including gathering, preparing, and submitting the completed application form to the USPTO. Time will vary depending upon the individual case. Any comments on the amount of time you require to complete this form and/or suggestions for reducing the burden, should be sent to the Chief Information Officer, U.S. Patent and Trademark Office, U.S. Department of Commerce, P.O. Box 1450, Alexandria, VA 22313-1450. DO NOT SEND FEES OR COMPLETED FORMS TO THIS ADDRESS. **SEND TO: Attention Certificate of Correction Branch, Commissioner for Patents, P.O. Box 1450, Alexandria, VA 22313-1450.**

USPTO
MAY 13 2008

If you need assistance in completing the form, call 1-800-PTO-9199 and select option 2.

Under the Paperwork Reduction Act of 1995, no persons are required to respond to a collection of information unless it displays a valid OMB control
(Also Form PTO-1050)

UNITED STATES PATENT AND TRADEMARK OFFICE
CERTIFICATE OF CORRECTION

PATENT NO. : **7,278,361 B2**

Page 1 of 3

APPLICATION NO. : **10/669,756**

ISSUE DATE : **Oct. 9, 2007**

INVENTOR(S) : **Zhurong et al.**

It is certified that error appears in the above-identified patent and that said Letters Patent is hereby corrected as shown below:

Drawings

Sheet 6, replace Fig. 9 with the figure depicted herein below, wherein the hinge axis has been labeled --203--

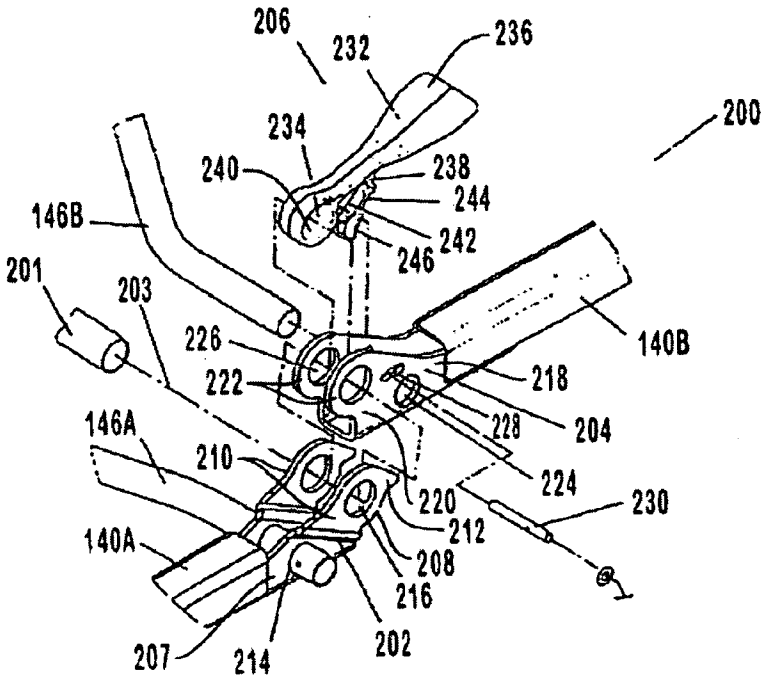

Fig. 9

MAILING ADDRESS OF SENDER (Please do not use customer number

Richard C. Gilmore, Esq., WORKMAN NYDEGGER
1000 Eagle Gate Tower
60 East South Temple
Salt Lake City, Utah 84111

This collection of information is required by 37 CFR 1.322, 1.323, and 1.324. The information is required to obtain or retain a benefit by the public which is to file (and by the USPTO to process) an application. Confidentiality is governed by 35 U.S.C. 122 and 37 CFR 1.14. This collection is estimated to take 1.0 hour to complete, including gathering, preparing, and submitting the completed application form to the USPTO. Time will vary depending upon the individual case. Any comments on the amount of time you require to complete this form and/or suggestions for reducing the burden, should be sent to the Chief Information Officer, U.S. Patent and Trademark Office, U.S. Department of Commerce, P.O. Box 1450, Alexandria, VA 22313-1450. DO NOT SEND FEES OR COMPLETED FORMS TO THIS ADDRESS. **SEND TO: Attention Certificate of Corrections Branch, Commissioner for Patents, P.O. Box 1450, Alexandria, VA 22313-1450.**

RECEIVED USPTO
MAY 13 2008

If you need assistance in completing the form, call 1-800-PTO-9199 and select option 2.

DOC Code: COCIN

PTO/SB/44 (04-05)
Approved for use through 04/30/2007. OMB 0651-0033
U.S. Patent and Trademark Office; U.S. DEPARTMENT OF COMMERCE
Under the Paperwork Reduction Act of 1995, no persons are required to respond to a collection of information unless it displays a valid OMB control
(Also Form PTO-1050)

UNITED STATES PATENT AND TRADEMARK OFFICE

CERTIFICATE OF CORRECTION

PATENT NO. : **7,278,361 B2**

APPLICATION NO. : **10/669,756**

ISSUE DATE : **Oct. 9, 2007**

INVENTOR(S) : **Zhurong et al.**

It is certified that error appears in the above-identified patent and that said Letters Patent is hereby corrected as shown below:

Drawings

Sheet 9, replace Figure 14 with the figure depicted herein below, wherein the reference for the first hinge connector has been changed from "1211" to –121–

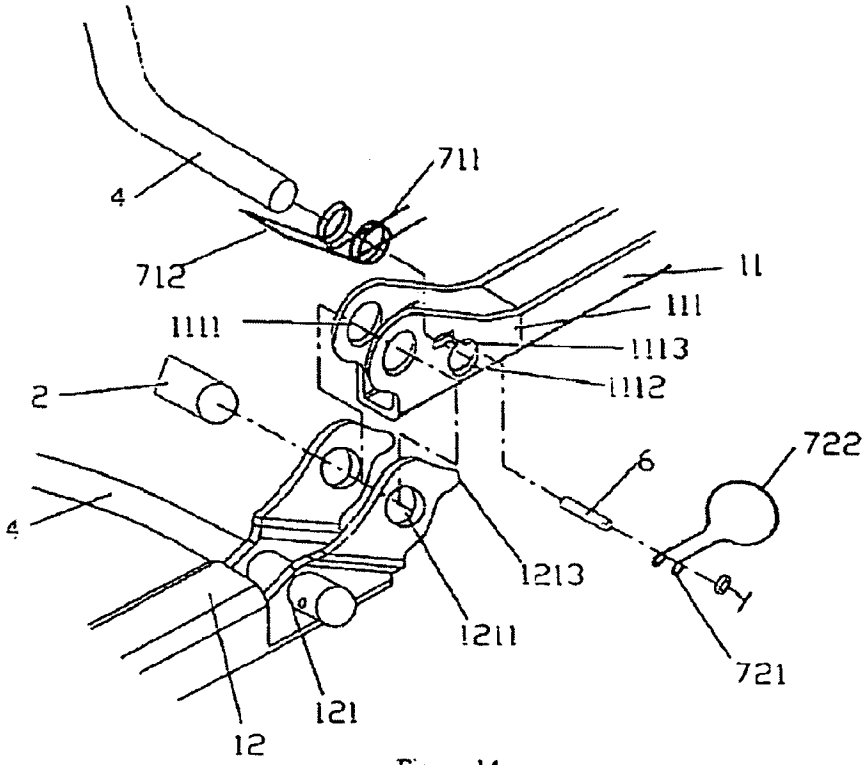

Figure 14

MAILING ADDRESS OF SENDER (Please do not use customer number

Richard C. Gilmore, Esq., WORKMAN NYDEGGER
1000 Eagle Gate Tower
60 East South Temple
Salt Lake City, Utah 84111

This collection of information is required by 37 CFR 1.322, 1.323, and 1.324. The information is required to obtain or retain a benefit by the public which is to file (and by the USPTO to process) an application. Confidentiality is governed by 35 U.S.C. 122 and 37 CFR 1.14. This collection is estimated to take 1.0 hour to complete, including gathering, preparing, and submitting the completed application form to the USPTO. Time will vary depending upon the individual case. Any comments on the amount of time you require to complete this form and/or suggestions for reducing the burden, should be sent to the Chief Information Officer, U.S. Patent and Trademark Office, U.S. Department of Commerce, P.O. Box 1450, Alexandria, VA 22313-1450. DO NOT SEND FEES OR COMPLETED FORMS TO THIS ADDRESS. **SEND TO: Attention Certificate of Corrections Branch, Commissioner for Patents, P.O. Box 1450, Alexandria, VA 22313-1450.**

If you need assistance in completing the form, call 1-800-PTO-9199 and select option 2.

MAY 13 2008

DOC Code: COCIN

PTO/SB/44 (04-05)
Approved for use through 04/30/2007. OMB 0651-0033
U.S. Patent and Trademark Office; U.S. DEPARTMENT OF COMMERCE
Under the Paperwork Reduction Act of 1995, no persons are required to respond to a collection of information unless it displays a valid OMB control
(Also Form PTO-1050)

UNITED STATES PATENT AND TRADEMARK OFFICE
CERTIFICATE OF CORRECTION

PATENT NO. : **7,278,361 B2**

Page 3 of 3

APPLICATION NO. : **10/669,756**

ISSUE DATE : **Oct. 9, 2007**

INVENTOR(S) : **Zhurong et al.**

It is certified that error appears in the above-identified patent and that said Letters Patent is hereby corrected as shown below:

Column 8
Line 65, after "exterior end", change "152" to --154--

Column 11
Line 15, change "embodiment" to --embodiments--

Column 13
Line 26, change "When reference" to --With reference--

Column 16
Line 5, change "203" to --201--

Column 18
Line 9, after "table top", insert --; and--

MAILING ADDRESS OF SENDER (Please do not use customer number

Richard C. Gilmore, Esq., WORKMAN NYDEGGER
1000 Eagle Gate Tower
60 East South Temple
Salt Lake City, Utah 84111

This collection of information is required by 37 CFR 1.322, 1.323, and 1.324. The information is required to obtain or retain a benefit by the public which is to file (and by the USPTO to process) an application. Confidentiality is governed by 35 U.S.C. 122 and 37 CFR 1.14. This collection is estimated to take 1.0 hour to complete, including gathering, preparing, and submitting the completed application form to the USPTO. Time will vary depending upon the individual case. Any comments on the amount of time you require to complete this form and/or suggestions for reducing the burden, should be sent to the Chief Information Officer, U.S. Patent and Trademark Office, U.S. Department of Commerce, P.O. Box 1450, Alexandria, VA 22313-1450. DO NOT SEND FEES OR COMPLETED FORMS TO THIS ADDRESS. **SEND TO: Attention Certificate of Corrections Branch, Commissioner for Patents, P.O. Box 1450, Alexandria, VA 22313-1450.**

RECEIVED USPTO
Patent Publication
MAY 13 2008

If you need assistance in completing the form, call 1-800-PTO-9199 and select option 2.

5700

UNITED STATES PATENT AND TRADEMARK OFFICE

COMMISSIONER FOR PATENTS
UNITED STATES PATENT AND TRADEMARK OFFICE
P.O. BOX 1450
ALEXANDRIA, VA 22313-1450
www.uspto.gov

COPY MAILED

MAR 2 3 2004

OFFICE OF PETITIONS

THOMAS E. YOUNG, ESQ.
FAY, SHARPE, FAGAN, MINNICH & MCKEE, LLP
SEVENTH FLOOR
1100 SUPERIOR AVENUE
CLEVELAND OH 44114-2518

In re Application of
David Boll et al.
Application No. 10/669,761
Filed: September 24, 2003
Attorney Docket No. NSEE 2 00005

DECISION GRANTING PETITION

This is a decision on the petition filed under 37 CFR 1.53 on January 23, 2004, requesting that the above-identified application be accorded a filing date of September 24, 2003, with Page 22 of the specification as a part of the original disclosure.

The petition is **GRANTED**.

The application was filed on September 24, 2003. However, on December 19, 2003, the Office of Initial Patent Examination mailed a "Notice" stating that the application had been accorded a filing date but that, *inter alia*, Page 22 of the specification (description and claims) appeared to have been omitted.

In response, on January 23, 2004, page 22 of the specification, the present petition, and a petition fee were filed. Petitioners argue that Page 22 was filed with the other application papers on September 24, 2003. In support, a copy of petitioners' postcard receipt was supplied January 23, 2004 with the instant petition. The postcard receipt shows an Office date stamp of September 24, 2003, and the above-identified application number, and acknowledges receipt of, *inter alia*, 8 pages of claims (pages 16 to 23). Petitioners request that the application, including Page 22 of the specification, be accorded a filing date of September 24, 2003.

A review of the record reveals that no Page 22 of the specification has been located among the application papers deposited on September 24, 2003. However, the evidence is convincing that the application papers deposited on September 24, 2003, included Page 22 of the specification. Therefore, the application, including Page 22 of the specification, is entitled to a filing date of September 24, 2003.

The "Notice" mailed on December 19, 2003, is vacated to the extent that it stated that Page 22 of the specification appeared to have been omitted.

In view of the above, the petition is granted. The petition fee will be refunded to counsel's deposit account, No. 06-0308, as authorized on the application transmittal sheet.

The application will be processed and examined using the copy of Page 22 supplied on January 23, 2004.

The application is being returned to Office of Initial Patent Examination for further processing with a filing date of September 24, 2003, using the application papers filed on that date, and the copy of Page 22 supplied on September 24, 2003.

Telephone inquiries related to this matter should be directed to the undersigned Petitions Attorney at 703-305-4497.

Patricia Faison-Ball

Patricia Faison-Ball
Senior Petitions Attorney
Office of Petitions

SPE RESPONSE FOR CERTIFICATE OF CORRECTION

DATE : 5/27/08

Paper No.: —

TO SPE OF : ART UNIT 3754

SUBJECT : Request for Certificate of Correction for Appl. No.: 10/669761 Patent No: 7191920B2

A response is requested with respect to a request for a certificate of correction.

With respect to the change(s) requested to correct Office and/or Applicant's errors, should the patent read as shown in the certificate of correction attached herewith or the COCIN document(s), in IFW images for the above-identified patented application? No new matter should be introduced, nor should the scope or meaning of the claims be changed.

If the response is for an IFW, within 7 days, please complete and forward the response, to the employee (named below) via scanning into application images, using document code **COCX**.

If the response is for a paper file wrapper, please complete the response and forward the response with the paper file wrapper, to the employee (named below), within 7 days, to:

Certificates of Correction Branch (CofC)
South Tower - 9A22
Palm Location 7580

VIRGINIA TOLBERT
Certificates of Correction Branch
703-308-9390 ext. 113

Thank You For Your Assistance

The request for issuing the above-identified correction(s) is hereby:
Note your decision on the appropriate box.

- ☒ **Approved** — All changes apply.
- ☐ **Approved in Part** — Specify below which changes **do not** apply.
- ☐ **Denied** — State the reasons for denial below.

Comments: OK to enter

Kevin P. Shaver — SPE

3754 — Art Unit

UNITED STATES PATENT AND TRADEMARK OFFICE

Commissioner for Patents
United States Patent and Trademark Office
P.O. Box 1450
Alexandria, VA 22313-1450
www.uspto.gov
DIW 05-04

ONYX PHARMACEUITICALS, INC.
3031 RESEARCH DRIVE
RICHMOND CA 94806

COPY MAILED

SEP 20 2004

OFFICE OF PETITIONS

In re Application of	:
Shen et al.	:
Application No. 10/669,768	: DECISION DISMISSING
Deposited: 24 September, 2003	: PETITION
Attorney Docket No. ONYX 1047-DIV	:

This is a decision in reference to the petition filed on 27 July, 2004, which is treated as a petition requesting that the above-identified application, which is treated as a petition requesting that the above identified application be accorded a filing date of 24 September, 2003, with six (6) sheets of drawings as a part of the original disclosure.

The petition is **dismissed**.

On 24 September, 2003, the application was deposited. Accordingly, on 7 July, 2004, Initial Patent Examination Division mailed a Notice of Incomplete Nonprovisional Application, stating that the application had been deposited without drawings, and that the filing date would be the date that drawings were received in compliance with 35 U.S.C. § 113 (first sentence). A two (2)-month period for reply was set.

The present petition was filed on 27 July, 2004. Petitioners assert that six (6) sheets of drawings were present on filing. In support, a copy of petitioners' return receipt postcard was supplied with the present petition. The postcard shows a Office date stamp of 09/24/03 and the above-identified application and itemizes the filing of, *inter alia*, six (6) sheets of formal drawings.

A review of the official file reveals that a copy of the six (6) sheets of drawings cannot be located among the papers received with the present petition. Petitioners must supply a copy of the six (6) sheets of drawings allegedly filed with the application papers.

As such, the petition is dismissed without prejudice to reconsideration pending submission of a copy of the six (6) sheets of drawings filed with the original application papers.

Any request for reconsideration should be filed within **TWO MONTHS** of the date of this decision in order to be considered timely. This time period may not be extended.[1]

Further correspondence with respect to this matter should be addressed as follows:

By mail: Mail Stop Petition
Commissioner for Patents
P.O. Box 1450
Alexandria, VA 22313-1450

By FAX: (703) 872-9306
Attn: Office of Petitions

By hand: U.S. Patent and Trademark Office
220 20th Street S.
Customer Window, Mail Stop Petition
Crystal Plaza 2, Lobby, Room 1B03
Arlington, VA 22202

Telephone inquiries concerning this matter may be directed to the undersigned at (703)308-6918.

D Wood

Douglas I. Wood
Senior Petitions Attorney
Office of Petitions

[1] 37 CFR 1.181(f).

UNITED STATES PATENT AND TRADEMARK OFFICE

Commissioner for Patents
United States Patent and Trademark Office
P.O. Box 1450
Alexandria, VA 22313-1450
www.uspto.gov
DIW 01-05

ONYX PHARMACEUITICALS, INC.
3031 RESEARCH DRIVE
RICHMOND CA 94806

COPY MAILED

JAN 0 4 2005

OFFICE OF PETITIONS

In re Application of	:
Shen et al.	:
Application No. 10/669,768	: DECISION GRANTING
Filed: 24 September, 2003	: PETITION
Attorney Docket No. ONYX 1047-DIV	:

This is a decision in reference to the renewed petition filed on 7 October, 2004, which is treated as a petition requesting that the above-identified application be accorded a filing date of 24 September, 2003, with six (6) sheets of drawings as a part of the original disclosure.

The petition is **granted**.

On 24 September, 2003, the application was deposited. Accordingly, on 7 July, 2004, Initial Patent Examination Division mailed a Notice of Incomplete Nonprovisional Application, stating that the application had been deposited without drawings, and that the filing date would be the date that drawings were received in compliance with 35 U.S.C. § 113 (first sentence). A two (2)-month period for reply was set.

A petition was filed on 27 July, 2004. Petitioners assert that six (6) sheets of drawings were present on filing. In support, a copy of petitioners' return receipt postcard was supplied with the present petition. The postcard shows a Office date stamp of 09/24/03 and the above-identified application and itemizes the filing of, *inter alia*, six (6) sheets of formal drawings. The petition was dismissed on 20 September, 2004, however, because no copy of the six (6) sheets of drawings was located among the papers filed with the petition.

In response, the present renewed petition was filed on 7 October, 2004, along with a copy of six (6) sheets of drawings.

A review of the record reveals that no sheets of drawings received on 24 September, 2003, are located among the application papers received on that date. However, the evidence is convincing that the application papers deposited on 24 September, 2003, included six (6) sheets of drawings, which were subsequently misplaced in the Office. Therefore, the application, including six (6) sheets of drawings, is entitled to a filing date of 24 September, 2003.

In view of the above, the petition is granted. The petition fee of $130.00 will be credited to counsel's deposit account, No. 15-0615.

The application will be processed and examined using the application papers present on filing and the copy of the six (6) sheets of drawings supplied with the present renewed petition.

The application is being referred to Initial Patent Examination Division for further processing with a filing date of 24 September, 2003, using the application papers filed on that date, and the copy of six (6) sheets of drawings described in the specification supplied with the present renewed petition.

Telephone inquiries concerning this matter may be directed to the undersigned at (571)272-3231.

DWood

Douglas I. Wood
Senior Petitions Attorney
Office of Petitions

UNITED STATES PATENT AND TRADEMARK OFFICE

Commissioner for Patents
United States Patent and Trademark Office
P.O. Box 1450
Alexandria, VA 22313-1450
www.uspto.gov

OCT 1 2007

Gary R. Fabian
ONYX PHARMACEUTICALS, INC.
2100 POWELL STREET
12TH FLOOR
EMERYVILLE, CA 94608

In re Application of	:
Yuqiao Shen	:
Serial No.: 10/669,768	: PETITION DECISION
Filed: September 24, 2003	:
Attorney Docket No.: ONYX1047-DIV	:

This is in response to the petition under 37 CFR 1.181, filed July 09, 2007, requesting to review the proceedings in an ex parte action or requirement in a patent application by the Examiner, specifically regarding the Examiner's action of rejection of previously allowed claims.

BACKGROUND

On March 02, 2006, the examiner mailed an office action, restricting the claims in Groups I, claims 9 and 10; Group II claims 9 and 10; Group III, claims 6 and 7; Group IV, claims 6 and 8; Group V, claims 11, 12, 14-16, 18 and 19 and Group IV, claims 11, 13, 14, 15 and 17-19.

On April 5, 2006, applicant filed a response, canceling claims 6-10, amending claims 11-19 and electing Group V, with traverse for examination purpose.

On June 19, 2007, the examiner mailed a non-final Office action, objecting claims 11 and 14, rejecting claims 14-19, 23 and 29-32 under 35 U.S.C. 112 first paragraph, as failing to comply with the written restriction requirement, rejecting claims 11, 13-19 and 23-32 under 35 U.S.C. 112 first paragraph, for lack of enablement within the scope of the claimed invention and objecting to claim 12 as being dependent upon a rejected base claim.

On September 21, 2006, applicant filed a response, arguing the rejections and amending the claims and the specification.

On December 14, 2006, the examiner mailed a final Office action, rejecting claims 14, 16, 17, 29-32 and the newly added claims 41-47 under 35 U.S.C. 112 first paragraph, as failing to comply with the written description requirement, rejecting claims 14, 16, 17, 29-32, 33 and 35-

47 under 35 U.S.C. 112 first paragraph, for lack of enablement within the scope of the claimed invention and indicating claims 11-13, 24-28 and 34 as allowable.

On April 26, 2007, applicant filed a response, arguing the rejection, canceling the rejected claims and remaining claims 11-13, 24-28 and 34 as indicated allowable by the examiner.

On May 9, 2007 the examiner mailed a non-final Office action, rejecting claims 11, 12, 24, 28, 33, 39 and 40 under 35 U.S.C. 112 first paragraph, for lack of enablement within the scope of the claimed invention and objecting to claims 13, 25-27 and 35-38 as being dependent upon a rejected base claim. The examiner indicated that the objected claims would be allowable if rewritten in independent form including all of the limitations of the base claims and any intervening claims.

In response thereto, applicant filed this petition on July 9, 2007, requesting the withdrawal of the "new", non-final rejection of May 9, 2007 and issuance of a Notice of allowability for the pending claims, i.e., claims 11-13, 24-28, 33, and 35-40.

DISCUSSION

Applicant in his remarks argues, that in order to reject the claims, which were indicated as allowable in the previous Office action, according to MPEP 706.04 the careful review and consideration of a primary examiner is required. Applicant also argues that the new rejection of May 9, 2007 asserted by the examiner is not new and was overcome previously. Applicant's attention is drawn to page 2, lines 1-4 of the office action of May 9, 2007, indicating that upon review of the claims of the instant application in a **patentability conference** it is apparent that the application is not in condition for allowance. Such statement indicates, that the examiner's position on the allowability of the claims was reversed in a patentability conference held with two supervisors or a supervisor and a primary examiner. Moreover, the final page of the Office action includes the signature of Supervisory Patent Examiner Joe Woitach, who also has authorization to sign as a Primary examiner. Thus, in the instant case the requirement of MPEP 706.04 was met by the Office, and the case was reopened for examination. This is also consistent with MPEP 1005, which permits a Primary Patent examiner to reject previously allowed claims.

Some of applicants' arguments in the petition appear to be directed to appealable matters based on the merits of the rejection. Filing a petition is not a substitution for complete reply to an outstanding Office action. Alternatively, because the claims of the instant application have been twice rejected by a primary examiner, applicant may appeal the rejections of record to the Board of Patent Appeals and Interferences. Applicant's attention is directed to MPEP 37 CFR 41.31.

**>*37 CFR 41.31. Appeal to Board.*

(a) *Who may appeal and how to file an appeal*. (1) Every applicant, any of whose claims has been twice rejected, may appeal from the decision of the examiner to the Board by filing a notice of appeal accompanied by the fee set forth in § 41.20(b)(1) within the time period provided under § 1.134 of this title for reply.

(2) Every owner of a patent under *ex parte* reexamination filed under § 1.510 of this title before November 29, 1999, any of whose claims has been twice rejected, may appeal from the decision of the examiner to the Board by filing a notice of appeal accompanied by the fee set forth in § 41.20(b)(1) within the time period provided under § 1.134 of this title for reply.

(3) Every owner of a patent under *ex parte* reexamination filed under § 1.510 of this title on or after November 29, 1999, any of whose claims has been finally (§ 1.113 of this title) rejected, may appeal from the decision of the examiner to the Board by filing a notice of appeal accompanied by the fee set forth in § 41.20(b)(1) within the time period provided under § 1.134 of this title for reply.

(b) The signature requirement of § 1.33 of this title does not apply to a notice of appeal filed under this section.

(c) An appeal, when taken, must be taken from the rejection of all claims under rejection which the applicant or owner proposes to contest. Questions relating to matters not affecting the merits of the invention may be required to be settled before an appeal can be considered.

(d) The time periods set forth in paragraphs (a)(1) through (a)(3) of this section are extendable under the provisions of § 1.136 of this title for patent applications and § 1.550(c) of this title for ex parte reexamination proceedings.<

DECISION

Accordingly, the petition is **DENIED**.

Any request for consideration must be filed within two (2) months of the mailing date of this decision.

Applicants remain under obligation to reply to the Final Office action mailed 9 May 2007 with in the response time specified therein or as extendable under 37 CFR 1.136(a).

Should there be any questions about this decision please contact Special Program Examiner Julie Burke, by letter addressed to Director, TC 1600, at the address listed above, or by telephone at 571-272-1600 or by facsimile sent to the general Office facsimile number, 571-273-8300.

Christopher Low
Director, Technology Center 1600 (Acting)

UNITED STATES PATENT AND TRADEMARK OFFICE

Commissioner for Patents
United States Patent and Trademark Office
P.O. Box 1450
Alexandria, VA 22313-1450
www.uspto.gov

PILLSBURY WINTHROP SHAW PITTMAN, LLP
P.O. BOX 10500
MCLEAN VA 22102

COPY MAILED

JUN 0 1 2007

OFFICE OF PETITIONS

In re Application of
Masahiro Nakashika
Application No. 10/669,797
Filed: September 25, 2003
Attorney Docket No. 0085312-0306106

DECISION ON PETITION

This is a decision on the petition under the unintentional provisions of 37 CFR 1.137(b), filed January 24, 2007, to revive the above-identified application.

The petition is **GRANTED**.

The application became abandoned for failure to reply in a timely manner to the non-final Office action mailed, March 21, 2006, which set a shortened statutory period for reply of three (3) months. No extensions of time under the provisions of 37 CFR 1.136(a) were obtained. Accordingly, the application became abandoned on June 22, 2006.

The petition satisfies the requirements of 37 CFR 1.137(b) in that petitioner has supplied (1) the reply in the form of an amendment, (2) the petition fee of $1500; and (3) a proper statement of unintentional delay.

The application file does not indicate a change of address has been filed in this case, although the address given on the petition differs from the address of record. A change of address should be filed in this case in accordance with MPEP 601.03. A courtesy copy of this decision is being mailed to the address noted on the petition. However, until otherwise instructed, all future correspondence regarding this application will be mailed solely to the address of record.

Telephone inquiries concerning this decision should be directed to April Wise at (571) 272-1642.

This application is being referred to Technology Center AU 2189 for appropriate action by the Examiner in the normal course of business on the reply received January 24, 2007.

Irvin Dingle
Petitions Examiner
Office of Petitions

cc: JEFFREY D. KARCESKI
PILLSBURY WINTHROP SHAW PTITMANN, LLP
2300 N STREET, NW
WASHINGTON, DC 20037-1122

UNITED STATES PATENT AND TRADEMARK OFFICE

COMMISSIONER FOR PATENTS
UNITED STATES PATENT AND TRADEMARK OFFICE
P.O. BOX 1450
ALEXANDRIA, VA 22313-1450
www.uspto.gov

MENDEL 2 C/O MOFO SF
425 MARKET STREET
SAN FRANCISCO, CA 94066

COPY MAILED
DEC 13 2006
OFFICE OF PETITIONS

In re Application of
Cai-Zhong Jiang, et al.
Application No. 10/669,824
Filed: September 23, 2003
Attorney Docket No. 514442001620

DECISION ON PETITIONS
UNDER 37 CFR 1.78(a)(3) AND (a)(6)

This is a decision on the petition under 37 CFR §§ 1.78(a)(3) and 1.78(a)(6), filed May 31, 2006, to accept an unintentionally delayed claim under 35 U.S.C. §§120 and 119(e) for the benefit of the prior-filed applications set forth in the concurrently filed amendment.

The petitions are **GRANTED.**

A petition for acceptance of a claim for late priority under 37 CFR §§ 1.78(a)(3) and 1.78(a)(6) is only applicable to those applications filed on or after November 29, 2000. Further, the petition is appropriate only after the expiration of the period specified in 37 CFR §§ 1.78(a)(2)(ii) and 1.78(a)(5)(ii). In addition, the petition under 37 CFR §§ 1.78(a)(3) and 1.78(a)(6) must be accompanied by:

(1) the reference required by 35 U.S.C. §§ 120 and 119(e) and 37 CFR §§ 1.78(a)(2)(i) and 1.78(a)(5)(i) of the prior-filed application, unless previously submitted;
(2) the surcharge set forth in § 1.17(t); and
(3) a statement that the entire delay between the date the claim was due under 37 CFR §§ 1.78(a)(2)(ii) and 1.78(a)(5)(ii) and the date the claim was filed was unintentional. The Director may require additional information where there is a question whether the delay was unintentional.

Additionally, the instant nonprovisional application must be pending at the time of filing of the reference to the prior-filed provisional application as required by 37 CFR 1.78(a)(5)(ii). Further, the nonprovisional application claiming the benefit of the prior-filed provisional application must have been filed within twelve months of the filing date of the prior-filed provisional application. All the above requirements having been satisfied, the late claim for benefit of priority under 35 U.S.C. §§ 120 and 119(e) is accepted as being unintentionally delayed.

The granting of the petition to accept the delayed benefit claim to the prior-filed applications under 37 CFR §§ 1.78(a)(3) and 1.78(a)(6) should not be construed as meaning that this application is entitled to the benefit of the filing date of the prior-filed applications. In order for this application to be entitled to the benefit of the prior-filed applications, all other requirements under 35 U.S.C. §§120 and 1.78(a)(1) and (a)(2) and under 35 U.S.C. §119(e) and 37 CFR 1.78(a)(4) and (a)(5) must be met. Similarly, the fact that the corrected Filing Receipt accompanying this decision on petition includes the prior-filed applications should not be construed as meaning that applicant is entitled to the claim for benefit of priority to the prior-filed applications noted thereon. Accordingly, the examiner will, in due course, consider this benefit claim and determine whether the application is entitled to the benefit of the earlier filing date.

A corrected Filing Receipt, which includes the priority claim to the prior-filed applications, accompanies this decision on petition.

The application file does not indicate a change of address has been filed in this case, although the address given on the petition differs from the address of record. If appropriate, a change of address should be filed in accordance with MPEP 601.03. A courtesy copy of this decision is being mailed to the address noted on the petition. However, until otherwise instructed, all future correspondence regarding this application will be mailed solely to the address of record.

Any questions concerning this matter may be directed to Sherry Brinkley at (571) 272-3204. All other inquiries concerning either the examination procedures or status of the application should be directed to the Technology Center.

This application is being forwarded to Technology Center Art Unit 1638 for consideration by the examiner of the claim under 35 U.S.C. § §120 and 119(e) of the prior-filed nonprovisional and provisional applications.

Sherry D. Brinkley
Petitions Examiner
Office of Petitions

Frances M. Hicks
Petitions Examiner
Office of Petitions

ATTACHMENT : Corrected Filing Receipt

cc: MENDEL BIOTECHNOLOGY, INC.
21375 CABOT BLVD.
HAYWARD, CA 94545

UNITED STATES PATENT AND TRADEMARK OFFICE

UNITED STATES DEPARTMENT OF COMMERCE
United States Patent and Trademark Office
Address: COMMISSIONER FOR PATENTS
P.O. Box 1450
Alexandria, Virginia 22313-1450
www.uspto.gov

APPL NO.	FILING OR 371 (c) DATE	ART UNIT	FIL FEE REC'D	ATTY.DOCKET NO	DRAWINGS	TOT CLMS	IND CLMS
10/669,824	09/23/2003	1638	982	514442001620	22	21	4

CONFIRMATION NO. 2629

CORRECTED FILING RECEIPT

OC000000021584638

47334
MENDEL 2 C/O MOFO SF
425 MARKET STREET
SAN FRANCISCO, CA 94066

Date Mailed: 12/13/2006

Receipt is acknowledged of this regular Patent Application. It will be considered in its order and you will be notified as to the results of the examination. Be sure to provide the U.S. APPLICATION NUMBER, FILING DATE, NAME OF APPLICANT, and TITLE OF INVENTION when inquiring about this application. Fees transmitted by check or draft are subject to collection. Please verify the accuracy of the data presented on this receipt. **If an error is noted on this Filing Receipt, please mail to the Commissioner for Patents P.O. Box 1450 Alexandria Va 22313-1450. Please provide a copy of this Filing Receipt with the changes noted thereon. If you received a "Notice to File Missing Parts" for this application, please submit any corrections to this Filing Receipt with your reply to the Notice. When the USPTO processes the reply to the Notice, the USPTO will generate another Filing Receipt incorporating the requested corrections (if appropriate).**

Applicant(s)

Cai-Zhong Jiang, Fremont, CA;
Jacqueline E. Heard, Stonington, CT;
Oliver Ratcliffe, Oakland, CA;
Neal I. Gutterson, Oakland, CA;
Frederick D. Hempel, Albany, CA;
Roderick W. Kumimoto, San Bruno, CA;
James S. Keddie, San Mateo, CA;
Bradley K. Sherman, Berkeley, CA;

Power of Attorney: The patent practitioners associated with Customer Number **47550**.

Domestic Priority data as claimed by applicant

This application is a CIP of 10/302,267 11/22/2002
which is a DIV of 09/506,720 02/17/2000 ABN
which claims benefit of 60/135,134 05/20/1999
This application 10/669,824
is a CIP of 10/278,173 10/21/2002
which is a DIV of 09/533,392 03/22/2000 ABN
which claims benefit of 60/125,814 03/23/1999
This application 10/669,824
is a CIP of 09/533,029 03/22/2000 PAT 6,664,446
which claims benefit of 60/125,814 03/23/1999
This application 10/669,824
is a CIP of 09/713,994 11/16/2000 ABN
which claims benefit of 60/227,439 08/22/2000
This application 10/669,824
is a CIP of 09/934,455 08/22/2001 ABN

which claims benefit of 60/227,439 08/22/2000
and is a CIP of 09/713,994 11/16/2000 ABN
and is a CIP of 09/837,944 04/18/2001 ABN
This application 10/669,824
is a CIP of 09/823,676 03/30/2001 PAT 6,717,034
and is a CIP of 10/225,068 08/09/2002
which claims benefit of 60/310,847 08/09/2001
and claims benefit of 60/336,049 11/19/2001
and claims benefit of 60/338,692 12/11/2001
and is a CIP of 09/837,944 04/18/2001 ABN
and is a CIP of 10/171,468 06/14/2002 ABN
This application 10/669,824
is a CIP of 10/225,066 08/09/2002
which claims benefit of 60/310,847 08/09/2001
and claims benefit of 60/336,049 11/19/2001
and said 10/225,068 08/09/2002
claims benefit of 60/338,692 12/11/2001
and said 10/225,066 08/09/2002
is a CIP of 09/837,944 04/18/2001 ABN
and is a CIP of 10/171,468 06/14/2002 ABN
This application 10/669,824
is a CIP of 10/225,067 08/09/2002 PAT 7,135,616
which claims benefit of 60/310,847 08/09/2001
and said 10/225,066 08/09/2002
claims benefit of 60/336,049 11/19/2001
and claims benefit of 60/338,692 12/11/2001
and said 10/225,067 08/09/2002
is a CIP of 09/837,944 04/18/2001 ABN
and is a CIP of 10/171,468 06/14/2002 ABN
This application 10/669,824
is a CIP of 10/374,780 02/25/2003
and is a CIP of 10/412,699 04/10/2003
and is a CIP of 10/666,642 09/18/2003
which claims benefit of 60/434,166 12/17/2002

Foreign Applications

If Required, Foreign Filing License Granted: 03/24/2004

The country code and number of your priority application, to be used for filing abroad under the Paris Convention, is US10/669,824

Projected Publication Date: Not Applicable

Non-Publication Request: No

Early Publication Request: No

Title

Methods for modifying plant biomass and abiotic stress

Preliminary Class

800

PROTECTING YOUR INVENTION OUTSIDE THE UNITED STATES

Since the rights granted by a U.S. patent extend only throughout the territory of the United States and have no effect in a foreign country, an inventor who wishes patent protection in another country must apply for a patent in a specific country or in regional patent offices. Applicants may wish to consider the filing of an international application under the Patent Cooperation Treaty (PCT). An international (PCT) application generally has the same effect as a regular national patent application in each PCT-member country. The PCT process **simplifies** the filing of patent applications on the same invention in member countries, but **does not result** in a grant of "an international patent" and does not eliminate the need of applicants to file additional documents and fees in countries where patent protection is desired.

Almost every country has its own patent law, and a person desiring a patent in a particular country must make an application for patent in that country in accordance with its particular laws. Since the laws of many countries differ in various respects from the patent law of the United States, applicants are advised to seek guidance from specific foreign countries to ensure that patent rights are not lost prematurely.

Applicants also are advised that in the case of inventions made in the United States, the Director of the USPTO must issue a license before applicants can apply for a patent in a foreign country. The filing of a U.S. patent application serves as a request for a foreign filing license. The application's filing receipt contains further information and guidance as to the status of applicant's license for foreign filing.

Applicants may wish to consult the USPTO booklet, "General Information Concerning Patents" (specifically, the section entitled "Treaties and Foreign Patents") for more information on timeframes and deadlines for filing foreign patent applications. The guide is available either by contacting the USPTO Contact Center at 800-786-9199, or it can be viewed on the USPTO website at http://www.uspto.gov/web/offices/pac/doc/general/index.html.

For information on preventing theft of your intellectual property (patents, trademarks and copyrights), you may wish to consult the U.S. Government website, http://www.stopfakes.gov. Part of a Department of Commerce initiative, this website includes self-help "toolkits" giving innovators guidance on how to protect intellectual property in specific countries such as China, Korea and Mexico. For questions regarding patent enforcement issues, applicants may call the U.S. Government hotline at 1-866-999-HALT (1-866-999-4158).

LICENSE FOR FOREIGN FILING UNDER
Title 35, United States Code, Section 184
Title 37, Code of Federal Regulations, 5.11 & 5.15

GRANTED

The applicant has been granted a license under 35 U.S.C. 184, if the phrase "IF REQUIRED, FOREIGN FILING LICENSE GRANTED" followed by a date appears on this form. Such licenses are issued in all applications where the conditions for issuance of a license have been met, regardless of whether or not a license may be required as set forth in 37 CFR 5.15. The scope and limitations of this license are set forth in 37 CFR 5.15(a) unless an earlier license has been issued under 37 CFR 5.15(b). The license is subject to revocation upon written notification. The date indicated is the effective date of the license, unless an earlier license of similar scope has been granted under 37 CFR 5.13 or 5.14.

This license is to be retained by the licensee and may be used at any time on or after the effective date thereof unless it is revoked. This license is automatically transferred to any related applications(s) filed under 37 CFR 1.53(d). This license is not retroactive.

The grant of a license does not in any way lessen the responsibility of a licensee for the security of the subject matter as imposed by any Government contract or the provisions of existing laws relating to espionage and the national security or the export of technical data. Licensees should apprise themselves of current regulations especially with respect to certain countries, of other agencies, particularly the Office of Defense Trade Controls, Department of State (with respect to Arms, Munitions and Implements of War (22 CFR 121-128)); the Bureau of

Industry and Security, Department of Commerce (15 CFR parts 730-774); the Office of Foreign Assets Control, Department of Treasury (31 CFR Parts 500+) and the Department of Energy.

NOT GRANTED

No license under 35 U.S.C. 184 has been granted at this time, if the phrase "IF REQUIRED, FOREIGN FILING LICENSE GRANTED" DOES NOT appear on this form. Applicant may still petition for a license under 37 CFR 5.12, if a license is desired before the expiration of 6 months from the filing date of the application. If 6 months has lapsed from the filing date of this application and the licensee has not received any indication of a secrecy order under 35 U.S.C. 181, the licensee may foreign file the application pursuant to 37 CFR 5.15(b).

Petition approved 6/25/07 ANNE MARIE GRUNBERG SUPERVISORY PATENT EXAMINER

Docket No. MBI-0034 CIP

IN THE UNITED STATES PATENT AND TRADEMARK OFFICE

In re Patent Application of : Jiang, Cai-Zhong, et al.

Title: **METHODS FOR MODIFYING PLANT BIOMASS AND TOLERANCE TO ABIOTIC STRESS**

Serial No.: TBA 10/669,824 Filing Date: Herewith

Examiner: TBA Group Art Unit: TBA 1638

Mail Stop Patent Application
Commissioner For Patents
P.O. BOX 1450
Alexandria, VA 22313-1450

PETITION FOR INCLUSION OF COLOR PHOTOGRAPHS IN A UTILITY PATENT APPLICATION PURSUANT TO 37 C.F.R. §1.84(B)(2)

Dear Sir:

This is a request under the provisions of 37 CFR 1. 84(B)(2) to include at least three (3) color photograph(s) in the above-referenced utility patent application. Applicants herewith include for Figures 8A and 8B, which are incorporated onto a single page, three (3) sets of the color photographs.

Applicants have included the following language as the first paragraph in that portion of the specification relating to the brief description of the drawings:

> The file of this patent contains at least one drawing executed in color. Copies of this patent with color drawing(s) will be provided by the Patent and Trademark Office upon request and payment of the necessary fee.

Applicants respectfully submit that the inclusion of color photographs in the utility patent application is necessary for the following reasons.

CERTIFICATE OF EXPRESS MAILING
"Express Mail" Label No.: EL 889 523 626 US

Date of Deposit: September 23, 2003
I hereby certify under 37 C.F.R 1.10 that this correspondence is being deposited with the United States Postal Service as "Express Mail Post Office To Addressee" with sufficient postage on the date indicated above and is addressed to : Mail Stop Patent Application, Commissioner for Patents, Po Box 1450, Alexandria, VA 22313-1450

(Signature) Kathleen K. Muto
(Printed Name) KATHLEEN K. MUTO

1) Monochrome photographs of Figures 8A and 8B do not clearly distinguish the cotyledons of developing seedlings from their background, and thus do not clearly show the full extent of increased cotyledon expansion in the overexpressing seedlings in Figure 8B, compared to the seedlings of wild-type in Figure 8A. Copies of Figures 8A and 8B in both monochrome and color are attached to underscore to this statement.

The Commissioner is hereby authorized to charge Mendel Biotechnology, Inc. Deposit Account No. 50-1025 the amount of $130.00, the fee for such a petition as set forth under 37 C.F.R. §1.17(i), or charge the correct fee to said Deposit Account, as the Commissioner deems appropriate.

Respectfully submitted,

Date: September 23, 2003

By: _____

Jeffrey M. Libby, Ph.D
Registration No. 48,251
Direct Telephone: (510) 259-6138

Mendel Biotechnology, Inc.
21375 Cabot Boulevard
Hayward, California 94545
Telephone: (510) 264-0280
Fax: (510) 264-0254

MBI0034CIPPetColorPhotos.doc

UNITED STATES PATENT AND TRADEMARK OFFICE

Commissioner for Patents
United States Patent and Trademark Office
P.O. Box 1450
Alexandria, VA 22313-1450
www.uspto.gov

Annette S. Parent, Esq.
Townsend and Townsend and Crew LLP
Two Embarcadero Center, Eighth Floor
San Francisco CA 94111

MAILED

MAY 24 2010

OFFICE OF PETITIONS

In re Application of	:	
Cai-Zhong Jiang et al.	:	
Application No. 10/669,824	:	DECISION ON PETITION
Filed: September 23, 2003	:	TO WITHDRAW
Attorney Docket No. MBI-0034CIP	:	FROM RECORD
	:	

This is a decision on the Request to Withdraw as attorney or agent of record under 37 C.F.R. § 1.36(b), filed March 26, 2010.

The request is **APPROVED**.

A grantable request to withdraw as attorney/agent of record must be signed by every attorney/agent seeking to withdraw or contain a clear indication that one attorney is signing on behalf of another/others. A request to withdraw will not be approved unless at least 30 (thirty) days would remain between the date of approval and the later of the expiration date of a time to file a response or the expiration date of the maximum time period which can be extended under 37 C.F.R. § 1.136(a).

The request was signed by Michael R. Ward on behalf of all attorneys/agents associated with customer number 47550. All attorneys/agents have been withdrawn.

Applicant is reminded that there is no attorney of record at this time.

The correspondence address has been changed and is copied below.

Telephone inquiries concerning this decision should be directed to Kimberly Inabinet at 571-272-4618.

/Kimberly Inabinet/

Kimberly Inabinet
Petitions Examiner
Office of Petitions

cc: Mendel Biotechnology, Inc.
3935 Point Eden Way
Hayward, CA 94545-3720

UNITED STATES PATENT AND TRADEMARK OFFICE

UNITED STATES DEPARTMENT OF COMMERCE
United States Patent and Trademark Office
Address: COMMISSIONER FOR PATENTS
P.O. Box 1450
Alexandria, Virginia 22313-1450
www.uspto.gov

APPLICATION NUMBER	FILING OR 371(C) DATE	FIRST NAMED APPLICANT	ATTY. DOCKET NO./TITLE
10/669,824	09/23/2003	Cai-Zhong Jiang	MBI-0034CIP

CONFIRMATION NO. 2629

POWER OF ATTORNEY NOTICE

90959
Annette S. Parent, Esq.
Townsend and Townsend and Crew LLP
Two Embarcadero Center, Eighth Floor
San Francisco, CA 94111

OC000000041752340

Date Mailed: 05/24/2010

NOTICE REGARDING CHANGE OF POWER OF ATTORNEY

This is in response to the Power of Attorney filed 03/26/2010.

- The withdrawal as attorney in this application has been accepted. Future correspondence will be mailed to the new address of record. 37 CFR 1.33.

/kainabinet/

Office of Data Management, Application Assistance Unit (571) 272-4000, or (571) 272-4200, or 1-888-786-0101

UNITED STATES PATENT AND TRADEMARK OFFICE

Commissioner for Patents
United States Patent and Trademark Office
P.O. Box 1450
Alexandria, VA 22313-1450
www.uspto.gov

KRIEG DEVAULT LLP
ONE INDIANA SQUARE
SUITE 2800
INDIANAPOLIS IN 46204-2079

COPY MAILED

JAN 11 2006

OFFICE OF PETITIONS

In re Application of		
Mark A. Stansbury	:	
Application No. 10/669,829	:	DECISION ON
Filed: September 24, 2003	:	PETITION
Attorney Docket No. NSAC-2	:	

This is in response to the paper titled "RESPONSE TO NOTICE OF ABANDONMENT", filed November 2, 2005, which is being treated as a petition under 37 CFR 1.181 to withdraw the holding of abandonment.

The petition under 37 CFR 1.181 is **GRANTED**.

The holding of abandonment is **WITHDRAWN**.

The above-identified application was held abandoned for failure to timely file an Appeal Brief. The Office mailed a final Office action on December 27, 2004, and Applicant filed a Notice of Appeal on March 31, 2005.[1] Accordingly, Applicant had until May 31, 2005 to file an Appeal Brief, or until October 31, 2005 with the purchase of the maximum five month extension of time. The Office mailed a Notice of Abandonment was mailed on September 20, 2005. Applicant filed an Appeal Brief and fee on October 31, 2005, made timely with the purchase of a five month extension of time.

---

[1] The Notice of Appeal was made timely with a Certificate of Mailing dated March 28, 2005. March 27, 2005 fell on a Sunday. See 37 CFR 1.7(a).

It is obvious from the above that the Notice of Abandonment was mailed in error. Accordingly, the holding of abandonment is withdrawn.

Given the basis for granting this petition, no petition fee was required.

The application file is being forwarded to Group Art Unit 3632 for consideration of the Appeal Brief filed October 31, 2005.

Telephone inquiries related to this decision should be directed to the undersigned at 571-272-3207.

Cliff Congo
Petitions Attorney
Office of Petitions

UNITED STATES PATENT AND TRADEMARK OFFICE

Commissioner for Patents
United States Patent and Trademark Office
P.O. Box 1450
Alexandria, VA 22313-1450
www.uspto.gov

GIFFORD KRASS GROH SPRINKLE
ANDERSON & CITKOWSKI, PC
P.O. BOX 7021
TROY, MI 48007-7021

COPY MAILED

SEP 14 2005

OFFICE OF PETITIONS

In re Application of	:	
John Linder	:	
Application No. 10/669,850	:	ON PETITION
Filed: September 24, 2004	:	
Attorney Docket No. LJB-10002/08	:	

This is a decision on the petition filed, August 8, 2005 under 37 CFR 1.137(b), to revive the above-identified application.

The petition is **GRANTED.**

The above-identified application became abandoned for failure to reply within the meaning of 37 CFR 1.113 in a timely manner to the final Office action mailed January 7, 2005, which set a shortened statutory period for reply of three (3) months. No extension of time under the provisions of 37 CFR 1.136(a) were obtained. Accordingly, the above-identified application became abandoned on April 8, 2005.

The above-identified application is being revived solely for purposes of continuity with a Request For Continued Examination (RCE) filed on August 8, 2005.

Telephone inquiries concerning this decision should be directed to Irvin Dingle at (571) 272-3210.

This matters is being referred to Technology Center AU 3636 for further processing.

Irvin Dingle
Petitions Examiner
Office of Petitions

UNITED STATES PATENT AND TRADEMARK OFFICE

Commissioner for Patents
United States Patent and Trademark Office
P.O. Box 1450
Alexandria, VA 22313-1450
www.uspto.gov

OLIFF & BERRIDGE, PLC
P O BOX 19928
ALEXANDRIA, VA 22320

COPY MAILED
AUG 0 8 2006
OFFICE OF PETITIONS

In re Application of
Hidetoshi Watanabe et al
Application No. 10/669,854
Filed: September 25, 2003
Attorney Docket No. 116800

DECISION GRANTING PETITION
UNDER 37 CFR 1.313(c)(2)

This is a decision on the petition, filed August 7, 2006, under 37 CFR 1.313(c)(2) to withdraw the above-identified application from issue after payment of the issue fee.

The petition is **GRANTED**.

The above-identified application is withdrawn from issue for consideration of a submission under 37 CFR 1.114 (request for continued examination). See 37 CFR 1.313(c)(2).

Petitioner is advised that the issue fee paid on July 11, 2006 in the above-identified application cannot be refunded. If, however, the above-identified application is again allowed, petitioner may request that it be applied towards the issue fee required by the new Notice of Allowance.[1]

Telephone inquiries should be directed to the undersigned at (571) 272-3218.

This matter is being referred to Technology Center AU 2861 for processing of the request for continued examination under 37 CFR 1.114 and for consideration of the Information Disclosure Statement.

Frances Hicks
Petitions Examiner
Office of Petitions

C:\Documents and Settings\FHicks\My Documents\470\Aug9\669854.wpd

---

[1] *The request to apply the issue fee to the new Notice may be satisfied by completing and returning the new Part B – Fee(s) Transmittal Form (along with any balance due at the time of submission), which includes the following language thereon: "The Director of the USPTO is requested to apply the Issue Fee and Publication Fee (if any) or to re-apply any previously paid issue fee in the application identified above. Petitioner is advised that, whether a fee is indicated as being due or not, the Issue Fee Transmittal Form* ***must*** *be completed and timely submitted to avoid abandonment. Note the language in bold text on the first page of the Notice of Allowance and Fee(s) Due (PTOL-85).*

UNITED STATES PATENT AND TRADEMARK OFFICE

Commissioner for Patents
United States Patent and Trademark Office
P.O. Box 1450
Alexandria, VA 22313-1450
www.uspto.gov

OLIFF & BERRIDGE, PLC
P.O. BOX 19928
ALEXANDRIA, VA 22320

COPY MAILED

FEB 16 2007

OFFICE OF PETITIONS

In re Application of :
Yasuji Mizutani :
Application No. 10/669,855 : ON PETITION
Filed: September 25, 2003 :
Attorney Docket No. 117323

This is a decision on the petition, filed February 15, 2007 under 37 CFR 1.313(c)(2) to withdraw the above-identified application from issue after payment of the issue fee.

The petition is **GRANTED**.

The above-identified application is withdrawn from issue for consideration of a submission under 37 CFR 1.114 (request for continued examination). See 37 CFR 1.313(c)(2).

Petitioner is advised that the issue fee paid on December 22, 2005 in the above-identified application cannot be refunded. If, however, the above-identified application is again allowed, petitioner may request that it be applied towards the issue fee required by the new Notice of Allowance.[1]

Telephone inquiries should be directed to Irvin Dingle at (571) 272-3210.

This matter is being referred to Technology Center AU 2612 for processing of the request for continued examination under 37 CFR 1.114 and for consideration of the concurrently filed Information Disclosure Statement.

Irvin Dingle
Petitions Examiner
Office of Petitions

---

[1] The request to apply the issue fee to the new Notice may be satisfied by completing and returning the new Issue Fee Transmittal Form PTOL-85(b), which includes the following language thereon: Commissioner for Patents is requested to apply the Issue Fee and Publication Fee (if any) or re-apply any previously paid issue fee to the application identified above. Petitioner is advised that, whether a fee is indicated as being due or not, the Issue Fee Transmittal Form **must** be completed and timely submitted to avoid abandonment. Note the language in bold text on the first page of the Notice of Allowance and Fee(s) Due (PTOL-85).

UNITED STATES PATENT AND TRADEMARK OFFICE

Commissioner for Patents
United States Patent and Trademark Office
P.O. Box 1450
Alexandria, VA 22313-1450
www.uspto.gov

FISH & RICHARDSON PC
P.O. BOX 1022
MINNEAPOLIS, MN 55440-1022

COPY MAILED

MAR 2 6 2009

OFFICE OF PETITIONS

In re Application of	:	
Dong-Ki LEE, et al	:	
Application No. 10/669,861	:	DECISION ON PETITION
Filed: September 24, 2003	:	TO WITHDRAW
Attorney Docket No. 12279-007002	:	FROM RECORD
	:	

This is a decision on the Request to Withdraw as attorney or agent of record under 37 C.F.R. § 1.36(b), filed March 6, 2009.

The request is **APPROVED**.

A grantable request to withdraw as attorney/agent of record must be signed by every attorney/agent seeking to withdraw or contain a clear indication that one attorney is signing on behalf of another/others. The Office requires the practitioner(s) requesting withdrawal to certify that he, she, or they have: (1) given reasonable notice to the client, prior to the expiration of the response period, that the practitioner(s) intends to withdraw from employment; (2) delivered to the client or a duly authorized representative of the client all papers and property (including funds) to which the client is entitled; and (3) notified the client of any responses that may be due and the time frame within which the client must respond, pursuant 37 CFR 10.40(c).

The request was signed by Ramon K. Tabtiang on behalf of all the attorneys of record.

All the attorneys of record have been withdrawn.

Applicant is reminded that there is no attorney of record at this time.

The correspondence address of record has been changed and the new correspondence address is the address indicated below until otherwise properly notified by the applicant.

Telephone inquiries concerning this decision should be directed to the undersigned at 571-272-6735.

Diane Goodwyn
Petitions Examiner
Office of Petitions

cc: TOOLGEN, INC.
C/O FIRSTLAW LEE & KO
19TH FL., TRUST TOWER, 275-7,
YANGJAE-DONG, SEOCHO-KU
SEOUL 137-130
KOREA

cc: RAMON K. TABTIANG
225 FRANKLIN ST.
BOSTON, MA 02110

UNITED STATES PATENT AND TRADEMARK OFFICE

Commissioner for Patents
United States Patent and Trademark Office
P.O. Box 1450
Alexandria, VA 22313-1450
www.uspto.gov

MAIL

MAY 2 9 2009

DIRECTOR'S OFFICE
TECHNOLOGY CENTER 2600

OLIFF & BERRIDGE, PLC
P.O. BOX 320850
ALEXANDRIA, VA 22320-4850

In re Application of:
OHARA, KIYOTAKA
Application Serial No.: 10/669,877
Filed: September 25, 2003
For: **IMAGE READING DEVICE FOR TRANSMITTING IMAGE DATA TO TERMINAL DEVICE**

DECISION
ON PETITION

This is a decision on the petition under 37 CFR 1.182 filed January 26, 2009 to request a refund of fees paid on filing of a Notice of Appeal filing fee and three-month extension of time filed October 14, 2008. The petition is treated under 37 CFR 1.181.

The Petition is **Denied**.

Petitioner asserts that the need to file the Notice of Appeal and three-month extension of time was based solely on the extensive delay caused by the Patent Office.

A review of the file history finds a Final Rejection was mailed April 14, 2008. An Interview was held on July 11, 2008, than followed with the filing of an after-final response on July 14, 2008. On October 14, 2008, applicant filed three-month extension of time along with the Notice of Appeal. On October 20, 2008, the Notice of Allowance was mailed including an Examiner's Amendment.

Given that an examiner's amendment was made on October 20, 2008 to place the application in condition for allowance, then in accordance with MPEP §706.07(f), subparts (G) and (J), if the time period for response to the outstanding final Office action was outside of the 3-month shortened statutory period for response, applicants were required to pay for the appropriate extensions of time in order for the examiner to perform an examiner's amendment.

MPEP §706.07(f) [R-6] Time for Reply to Final Rejection, states in part:

> (G) Where a complete first reply to a final Office action has not been filed within 2 months of the final Office action, applicant's authorization to make an amendment to place the application in condition for allowance must be made either within the 3 month shortened statutory period or within an extended period for reply that has been petitioned and paid for by applicant pursuant to 37 CFR 1.136(a).
> (J) Replies after final should not be considered by the examiner unless they are filed within the SSP or are accompanied by a petition for an extension of time and the appropriate fee (37 CFR 1.17 and 37 CFR 1.136(a)). See also MPEP §710.02(e). This requirement also applies to supplemental replies filed after the first reply.

The application file having been allowed, will be forwarded to Office of Publication for appropriate action in due course.

Wanda L Walker

Wanda Walker
Director, Technology Center 2600
Communications

United States
Patent And
Trademark Office

P.O. Box 1450, Alexandria, Virginia 22313-1450 – www.uspto.gov

PETITION DECISION

04/02/04

Bromberg & Sunstein LLP
125 Summer Street
Boston, MA

Dear Applicant:

The Box PG Pub replacement drawings for application number 10/669879 received on 01/07/04 by the U. S. Patent and Trademark Office will be included for patent publication.

Telephone inquiries should be directed to Kaletus King, Office of Pre-Grant Publication 703 605-4283.

Kaletus King

Signature of Reviewer, Office of Pre-Grant Publication

UNITED STATES PATENT AND TRADEMARK OFFICE

COMMISSIONER FOR PATENTS
UNITED STATES PATENT AND TRADEMARK OFFICE
P.O. BOX 1450
ALEXANDRIA, VA 22313-1450
www.uspto.gov

Ryan Kromholz & Manion, S. C.
Post Office Box 26618
Milwaukee, WI 53226

COPY MAILED

APR 29 2005

OFFICE OF PETITIONS

In re Application of	:	
Lee Bolduc, et al.	:	
Application No. 10/669,881	:	DECISION ON PETITIONS
Filed: September 24, 2003	:	UNDER 37 CFR 1.78(a)(3)
Attorney Docket No. 9494.17965-CIP2	:	AND UNDER 37 CFR 1.78(a)(6)

This is a decision on the petitions under 37 CFR §§ 1.78(a)(3) and 1.78(a)(6), filed November 15, 2004, to accept an unintentionally delayed claim under 35 U.S.C. §§120, 365(c) and 119(e) for the benefit of the prior-filed applications set forth in the concurrently filed amendment.

The petitions are **DISMISSED**.

A petition for acceptance of a claim for late priority under 37 CFR §§ 1.78(a)(3) and 1.78(a)(6) is only applicable to those applications filed on or after November 29, 2000. Further, the petition is appropriate only after the expiration of the period specified in 37 CFR §§ 1.78(a)(2)(ii) and 1.78(a)(5)(ii). In addition, the petition under 37 CFR §§ 1.78(a)(3) and 1.78(a)(6) must be accompanied by:

(1) the reference required by 35 U.S.C. §§ 120 and 119(e) and 37 CFR §§ 1.78(a)(2)(i) and 1.78(a)(5)(i) of the prior-filed application, unless previously submitted;

(2) the surcharge set forth in § 1.17(t); and

(3) a statement that the entire delay between the date the claim was due under 37 CFR §§ 1.78(a)(2)(ii) and 1.78(a)(5)(ii) and the date the claim was filed was unintentional. The Commissioner may require additional where there is a question whether the delay was unintentional.

The amendment submitted with the instant petition is physically part of the petition and, as such, does not comply with 37 CFR §§ 1.121, 1.53, or 1.4(c). Therefore, the amendment as drafted is unacceptable and is not considered a proper reference under 37 CFR 1.78(a)(2)(i). Note that 37 CFR 1.121 states amendments are made by filing a paper, in compliance with § 1.52, directing that specified amendments be made. The pertinent section of 37 CFR 1.52 states the claim (in this case, the claim for priority), must commence on a separate physical sheet. 37 CFR 1.4(c) states that each distinct subject must be contained in a separate paper since different matters may be considered by different branches of the USPTO.

In view of the above, a substitute amendment in compliance with the aforementioned rules, along with a renewed petition under 37 CFR 1.78(a)(3) and (a)(6), must be submitted. No further petition fee is due.

Further correspondence with respect to this matter should be addressed as follows:

By mail: Mail Stop PETITIONS
Commissioner for Patents
Post Office Box 1450
Alexandria, VA 22313-1450

By hand: U. S. Patent and Trademark Office
Customer Service Window, Mail Stop Petitions
Randolph Building
401 Dulany Street
Alexandria, VA 22314

By fax: (703) 872-9306
ATTN: Office of Petitions

Telephone inquiries concerning this decision should be directed to Marianne Jenkins at (571) 272-3223.

Frances M. Hicks
Lead Petitions Examiner
Office of Petitions
Office of the Deputy Commissioner
for Patent Examination Policy

UNITED STATES PATENT AND TRADEMARK OFFICE

COMMISSIONER FOR PATENTS
UNITED STATES PATENT AND TRADEMARK OFFICE
P.O. BOX 1450
ALEXANDRIA, VA 22313-1450
www.uspto.gov

Ryan Kromholz & Manion, S. C.
Post Office Box 26618
Milwaukee, WI 53226

COPY MAILED

AUG 1 1 2005

OFFICE OF PETITIONS

In re Application of	:
Lee Bolduc, et al.	:
Application No. 10/669,881	: DECISION ON PETITIONS
Filed: September 24, 2003	: UNDER 37 CFR 1.78(a)(3) AND (a)(6)
Attorney Docket No. 9494.17965-CIP2	:

This is a decision on the petitions under 37 CFR §§ 1.78(a)(3) and 1.78(a)(6), filed May 6, 2005, to accept an unintentionally delayed claim under 35 U.S.C. §§120 and 119(e) for the benefit of the prior-filed applications set forth in the concurrently filed amendment.

The petitions are **GRANTED.**

A petition for acceptance of a claim for late priority under 37 CFR §§ 1.78(a)(3) and 1.78(a)(6) is only applicable to those applications filed on or after November 29, 2000. Further, the petition is appropriate only after the expiration of the period specified in 37 CFR §§ 1.78(a)(2)(ii) and 1.78(a)(5)(ii). In addition, the petition under 37 CFR §§ 1.78(a)(3) and 1.78(a)(6) must be accompanied by:

(1) the reference required by 35 U.S.C. §§ 120 and 119(e) and 37 CFR §§ 1.78(a)(2)(i) and 1.78(a)(5)(i) of the prior-filed application, unless previously submitted;

(2) the surcharge set forth in § 1.17(t); and

(3) a statement that the entire delay between the date the claim was due under 37 CFR §§ 1.78(a)(2)(ii) and 1.78(a)(5)(ii) and the date the claim was filed was unintentional. The Commissioner may require additional where there is a question whether the delay was unintentional.

All the above requirements having been satisfied, the late claim for priority under 35 U.S.C. §§ 120 and 119(e) is accepted as being unintentionally delayed.

The granting of the petition to accept the delayed benefit claim to the prior-filed applications under 37 CFR §§ 1.78(a)(3) and 1.78(a)(6) should not be construed as meaning that this application is entitled to the benefit of the filing date of the prior-filed applications. In order for this application to be entitled to the benefit of the prior-filed applications, all other requirements under 35 U.S.C. §§120 and 1.78(a)(1) and (a)(2) and under 35 U.S.C. §119(e) and 37 CFR 1.78(a)(4) and (a)(5) must be met. Similarly, the fact that the corrected Filing Receipt accompanying this decision on petition includes the prior-filed applications should not be construed as meaning that applicant is entitled to the claim for benefit of priority to the prior-filed applications noted thereon. Accordingly, the examiner will, in due course, consider this benefit claim and determine whether the application is entitled to the benefit of the earlier filing date.

A corrected Filing Receipt, which includes the priority claim to the prior-filed applications, accompanies this decision on petition.

Any questions concerning this matter may be directed to Marianne Jenkins at (571) 272-3223. All other inquiries concerning either the examination procedures or status of the application should be directed to the Technology Center.

This application is being forwarded to Technology Center Art Unit 3731 for appropriate action on the amendment submitted May 6, 2005, including consideration by the examiner of the claim under 35 U.S.C. § §120 and 119(e) of the prior-filed nonprovisional and provisional applications.

Frances Hicks

Frances M. Hicks
Lead Petitions Examiner
Office of Petitions

ATTACHMENT: Corrected Filing Receipt

16 MAR 2006

UNITED STATES PATENT AND TRADEMARK OFFICE

Commissioner for Patents
United States Patent and Trademark Office
P.O. Box 1450
Alexandria, VA 22313-1450
www.uspto.gov

CHOATE, HALL & STEWART LLP
TWO INTERNATIONAL PLACE
BOSTON MA 02110

In re Application of	:
MANALIS et al.	:
Application No. 10/669,883	: DECISION ON PETITION
Filed: September 23, 2003	: UNDER 37 CFR 1.78(a)(3) and (6)
Attorney Docket No. 0492611-0510	:

This is a decision on the petition under 37 CFR 1.78(a)(3), filed 22 July 2005, to accept an unintentionally delayed claim under 35 U.S.C. §120 for the benefit of the prior-filed provisional application set forth in the concurrently filed amendment. Because the amendment accompanying the petition further adds a priority claim to a prior-filed provisional application, the petition has been treated under 37 CFR 1.78(a)(6).

The petition is **DISMISSED**.

The present nonprovisional application was filed after November 29, 2000, and the claim herein for the benefit of priority to the prior-filed provisional and U.S. applications is submitted after expiration of the period specified in 37 CFR 1.78(a)(2)(ii). Therefore, this is a proper petition under 37 CFR 1.78(a)(6).

A petition for acceptance of a claim for late priority under 37 CFR 1.78(a)(6) is only applicable to those applications filed on or after November 29, 2000. Further, the petition is appropriate only after the expiration of the period specified in 37 CFR 1.78(a)(2)(ii). In addition, the petition under 37 CFR 1.78(a)(6) must be accompanied by:

(1) the reference required by 35 U.S.C. § 119(e) and 37 CFR 1.78(a)(5) to the prior-filed application, unless previously submitted;
(2) the surcharge set forth in § 1.17(t); and
(3) a statement that the entire delay between the date the claim was due under 37 CFR 1.78(a)(5)(ii) and the date the claim was filed was unintentional. The Commissioner may require additional information where there is a question whether the delay was unintentional.

The petition does not comply with item (1) and (3) above.

A nonprovisional application that directly claims the benefit of a provisional application under 35 U.S.C. 119(e) must be filed within 12 months from the filing date of the provisional application. Although an application that itself directly claims the benefit of a provisional application is not required to specify the relationship to the provisional application, if the instant nonprovisional application is not filed within the 12 month period, but claims the benefit of an intermediate nonprovisional application under 35 U.S.C. 120 that was filed within 12 months from the filing date of the provisional application and claimed the benefit of the provisional application, the intermediate application must be clearly identified as claiming the benefit of

the provisional application so that the Office can determine whether the intermediate nonprovisional application was filed within 12 months of the provisional application and thus, whether the claim is proper. Applicant must state, for example, "this application is a continuation of Application No. C, filed ---, which is a continuation of Application No. B, filed ---, which claims the benefit of provisional Application No. A, filed ---." A benefit claim that merely states "this application claims the benefit of nonprovisional Application Nos. C and B, and provisional Application No. A" would be improper.

With regard to Item (1), applicant's benefit claim statement is set forth as: "This application is....claiming priority to Provisional Application No. 60/405,184, filed on August 22, 2002". An example of a proper benefit claim is: "This application is a continuation-in-part of U.S. Application No. 10/336,549, filed January 2, 2003, which claims priority to Provisional application 60/405,184, filed on August 22, 2002." See MPEP Section 201.11, Rev. 3, August 2005.

With respect to Item (3), applicant has not provided a statement that the entire delay between the date the claim was due under 37 CFR 1.78(a)(5)(ii) and the date the claim was filed was unintentional.

Accordingly, before the petition under 37 CFR § 1.78(a)(6) can be granted, a renewed petition under 37 CFR § 1.78(a)(6) and a substitute amendment (complying with 37 CFR 1.121) or application data sheet (37 CFR 1.76) is required.

Further correspondence with respect to this matter should be addressed as follows:

By mail: Mail Stop PETITIONS
Commissioner for Patents
Post Office Box 1450
Alexandria, VA 22313-1450

By hand: Customer Service Window
Mail Stop Petitions
Randolph Building
401 Dulany Street
Alexandria, VA 22314

By fax: (571) 273-8300
ATTN: Office of Petitions

Any questions concerning this matter may be directed to Cynthia Kratz at (571) 272-3286.

Cynthia M. Kratz
Attorney Advisor
Office of Petitions

Boris Milef
Legal Examiner
Office of Petitions

UNITED STATES PATENT AND TRADEMARK OFFICE

Commissioner for Patents
United States Patent and Trademark Office
P.O. Box 1450
Alexandria, VA 22313-1450
www.uspto.gov

0 3 JAN 2007

CHOATE, HALL & STEWART LLP
TWO INTERNATIONAL PLACE
BOSTON MA 02110

In re Application of	:
MANALIS et al.	: DECISION ON
Application No. 10/669,883	: RENEWED PETITION
Filed: September 23, 2003	: UNDER 37 CFR 1.78
Attorney Docket No. 0492611-0510	:

This is a decision on the "Petition to Claim Priority", filed 21 November 2006, to accept an unintentionally delayed claim under 35 U.S.C. §§119(e) and 120 for the benefit of the prior-filed provisional and nonprovisional applications set forth in the concurrently filed amendment.

The petition is **DISMISSED.**

On 16 March 2006, a decision dismissing applicant's petition under 37 CFR 1.78 was mailed to applicant indicating that applicant had failed to (1) clearly identify the intermediate nonprovisional application as claiming benefit to the provisional application and (2) make the proper statement that the entire delay between the date the claim was due under 37 CFR 1.78(a)(5)(ii) and the date the claim was filed was unintentional.

The present nonprovisional application was filed after November 29, 2000, and the claim herein for the benefit of priority to the above-noted, prior-filed nonprovisional applications is submitted after expiration of the period specified in 37 CFR 1.78(a)(2)(ii)and (5)(ii). Therefore, this is a proper petition under 37 CFR 1.78.

A petition for acceptance of a claim for late priority under 37 CFR 1.78(a)(3) and (a)(5) is only applicable to those applications filed on or after November 29, 2000. Further, the petition is appropriate only after the expiration of the period specified in 37 CFR 1.78(a)(2)(ii) and (a)(5)(ii). In addition, the petition under 37 CFR 1.78(a)(3) and (a)(6) must be accompanied by:

> **(1)** the reference required by 35 U.S.C. § 120 and 37 CFR 1.78(a)(2)(i) and 1.78(a)(5)(i) of prior filed application, unless previously submitted;
> **(2)** the surcharge set forth in § 1.17(t); and
> **(3)** a statement that the entire delay between the date the claim was due under 37 CFR 1.78(a)(2)(ii) and 1.78(a)(5)(ii) and the date the claim was filed was unintentional. The Director may require additional information where there is a question whether the delay was unintentional.

The petition complies with the requirements for a grantable petition under 37 CFR 1.78(a)(3) and (a)(6) in that (1) a reference to the prior-filed nonprovisional and provisional applications has been included in an amendment to the first sentence of the specification following the title, as provided by 37 CFR 1.78(a)(2)(iii) and (a)(5)(iii) and (2) the surcharge fee required by 37 CFR 1.17(t) has been submitted.

Applicant provided a statement of unintentional delay. However, applicant delayed in filing the renewed petition until 21 November 2006, over 8 months after the mailing of the 16 March 2006 decision. It is noted that applicant took other actions in this application; that is, on 1 August 2006, applicant filed, *inter alia*, an amendment to the claims. But applicant appeared to delay in responding to the 16 March 2006 decision, which set out precisely what was required to submit a grantable petition. 37 CFR 1.78(a)(3)(iii) and (a)(6)(iii) clearly states that "The Director may require additional information where there is a question whether the delay was unintentional."

Accordingly, before the petition under 37 CFR § 1.78 can be granted, a renewed petition under 37 CFR § 1.78 including an explanation for the lengthy delay between the mail date of the Decision of 16 March 2006 and the filing of the renewed petition on 21 November 2006 is required.

Further correspondence with respect to this matter should be addressed as follows:

By mail: Mail Stop PETITIONS
Commissioner for Patents
Post Office Box 1450
Alexandria, VA 22313-1450

By hand: Customer Service Window
Mail Stop Petitions
Randolph Building
401 Dulany Street
Alexandria, VA 22314

By fax: (571) 273-8300
ATTN: Office of Petitions

Any questions concerning this matter may be directed to Cynthia Kratz at (571) 272-3286.

Boris Milef
Legal Examiner
Office of PCT Legal Administration

UNITED STATES PATENT AND TRADEMARK OFFICE

Commissioner for Patents
United States Patent and Trademark Office
P.O. Box 1450
Alexandria, VA 22313-1450
www.uspto.gov

11 APR 2007

CHOATE, HALL & STEWART LLP
TWO INTERNATIONAL PLACE
BOSTON MA 02110

In re Application of	:
MANALIS et al.	: DECISION ON
Application No. 10/669,883	: RENEWED PETITION
Filed: September 23, 2003	: UNDER 37 CFR 1.78
Attorney Docket No. 0492611-0510	:

This is a decision on the "Petition to Claim Priority", filed 22 January 2007, to accept an unintentionally delayed claim under 35 U.S.C. §§119(e) and 120 for the benefit of the prior-filed provisional and nonprovisional applications set forth in the concurrently filed amendment.

The petition is **GRANTED.**

On 22 July 2005, applicant filed a petition under 37 CFR 1.78(a)(3).

On 16 March 2006, a decision dismissing applicant's petition under 37 CFR 1.78 was mailed to applicant indicating that applicant had failed to (1) clearly identify the intermediate nonprovisional application as claiming benefit to the provisional application and (2) make the proper statement that the entire delay between the date the claim was due under 37 CFR 1.78(a)(5)(ii) and the date the claim was filed was unintentional.

O n 21 November 2006, applicant filed a renewed petition under 37 CFR 1.78.

On 03 January 2007, a decision dismissing the petition was mailed indicating that an explanation of lengthy delay in filing the renewed petition was necessary.

On 22 January 2007, applicant filed a renewed petition providing an explanation of the delay.

The present nonprovisional application was filed after November 29, 2000, and the claim herein for the benefit of priority to the above-noted, prior-filed nonprovisional applications is submitted after expiration of the period specified in 37 CFR 1.78(a)(2)(ii)and (5)(ii). Therefore, this is a proper petition under 37 CFR 1.78.

A petition for acceptance of a claim for late priority under 37 CFR 1.78(a)(3) and (a)(5) is only applicable to those applications filed on or after November 29, 2000. Further, the petition is appropriate only after the expiration of the period specified in 37 CFR 1.78(a)(2)(ii) and (a)(5)(ii). In addition, the petition under 37 CFR 1.78(a)(3) and (a)(6) must be accompanied by:

(1) the reference required by 35 U.S.C. §§119(e) and 120 and 37 CFR 1.78(a)(2)(i) and 1.78(a)(5)(i) to the prior filed applications, unless previously submitted;
(2) the surcharge set forth in § 1.17(t); and
(3) a statement that the entire delay between the date the claim was due under 37 CFR

1.78(a)(2)(ii) and 1.78(a)(5)(ii) and the date the claim was filed was unintentional. The Director may require additional information where there is a question whether the delay was unintentional.

The petition complies with the requirements for a grantable petition under 37 CFR 1.78(a)(3) and (a)(6) in that (1) a reference to the prior-filed nonprovisional and provisional applications has been included in an amendment to the first sentence of the specification following the title, as provided by 37 CFR 1.78(a)(2)(iii) and (a)(5)(iii) and (2) the surcharge fee required by 37 CFR 1.17(t) has been submitted.

With respect to Item (3), Applicant has now provided a statement regarding the length of the unintentional delay between the mail date of the Decision of 16 March 2006 and the filing of the renewed petition on 21 November 2006.

The granting of the petition to accept the delayed benefit claim to the prior-filed applications under 37 CFR 1.78(a)(3) and 1.78(a)(6) should not be construed as meaning that this application is entitled to the benefit of the prior-filed applications. In order for this application to be entitled to the benefit of the prior-filed applications, all other requirements under 35 U.S.C. §§ 120 and 119(e) and 37 CFR 1.78(a)(1),(a)(2), (a)(4) and (a)(5) must be met. Similarly, the fact that the corrected Filing Receipt accompanying this decision on petition includes the prior-filed applications should not be construed as meaning that applicant is entitled to the claim for benefit of priority to the prior-filed applications noted thereon. Accordingly, the examiner will, in due course, consider this benefit claim and determine whether this application is entitled to the benefit of the earlier filing date.

A corrected Filing Receipt, which includes the priority claim to the prior-filed nonprovisional and provisional applications, accompanies this decision on petition.

Any inquiries concerning this decision may be directed to Cynthia Kratz at (571) 272-3286. All other inquiries concerning either the examination procedures or status of the application should be directed to the Technology Center.

This matter is being referred to Technology Center Art Unit 1634 for appropriate action on the amendment filed 21 November 2006, including consideration by the examiner of applicant's substitute amendment.

Boris Milef
Legal Examiner
Office of PCT Legal Administration

Enclosure: Corrected Filing Receipt

UNITED STATES PATENT AND TRADEMARK OFFICE

UNITED STATES DEPARTMENT OF COMMERCE
United States Patent and Trademark Office
Address: COMMISSIONER FOR PATENTS
P.O. Box 1450
Alexandria, Virginia 22313-1450
www.uspto.gov

APPL NO.	FILING OR 371(c) DATE	ART UNIT	FIL FEE REC'D	ATTY.DOCKET NO	TOT CLMS	IND CLMS
10/669,883	09/23/2003	1634	2092	0492611-0510 (MIT 10443)	160	6

CONFIRMATION NO. 2224

CORRECTED FILING RECEIPT

OC000000023215150

24280
CHOATE, HALL & STEWART LLP
TWO INTERNATIONAL PLACE
BOSTON, MA 02110

Date Mailed: 04/02/2007

Receipt is acknowledged of this regular Patent Application. It will be considered in its order and you will be notified as to the results of the examination. Be sure to provide the U.S. APPLICATION NUMBER, FILING DATE, NAME OF APPLICANT, and TITLE OF INVENTION when inquiring about this application. Fees transmitted by check or draft are subject to collection. Please verify the accuracy of the data presented on this receipt. **If an error is noted on this Filing Receipt, please mail to the Commissioner for Patents P.O. Box 1450 Alexandria Va 22313-1450. Please provide a copy of this Filing Receipt with the changes noted thereon. If you received a "Notice to File Missing Parts" for this application, please submit any corrections to this Filing Receipt with your reply to the Notice. When the USPTO processes the reply to the Notice, the USPTO will generate another Filing Receipt incorporating the requested corrections (if appropriate).**

Applicant(s)

Scott Manalis, Cambridge, MA;
Thomas Burg, Cambridge, MA;

Power of Attorney:

Theresa Devlin--45361

Domestic Priority data as claimed by applicant

This application is a CIP of 10/336,549 01/02/2003
which claims benefit of 60/405,184 08/22/2002

Foreign Applications

If Required, Foreign Filing License Granted: 12/18/2003

The country code and number of your priority application, to be used for filing abroad under the Paris Convention, is US10/669,883

Projected Publication Date: Not Applicable

Non-Publication Request: No

Early Publication Request: No

** SMALL ENTITY **

Title

Fabrication and packaging of suspended microchannel detectors

Preliminary Class

435

PROTECTING YOUR INVENTION OUTSIDE THE UNITED STATES

Since the rights granted by a U.S. patent extend only throughout the territory of the United States and have no effect in a foreign country, an inventor who wishes patent protection in another country must apply for a patent in a specific country or in regional patent offices. Applicants may wish to consider the filing of an international application under the Patent Cooperation Treaty (PCT). An international (PCT) application generally has the same effect as a regular national patent application in each PCT-member country. The PCT process **simplifies** the filing of patent applications on the same invention in member countries, but **does not result** in a grant of "an international patent" and does not eliminate the need of applicants to file additional documents and fees in countries where patent protection is desired.

Almost every country has its own patent law, and a person desiring a patent in a particular country must make an application for patent in that country in accordance with its particular laws. Since the laws of many countries differ in various respects from the patent law of the United States, applicants are advised to seek guidance from specific foreign countries to ensure that patent rights are not lost prematurely.

Applicants also are advised that in the case of inventions made in the United States, the Director of the USPTO must issue a license before applicants can apply for a patent in a foreign country. The filing of a U.S. patent application serves as a request for a foreign filing license. The application's filing receipt contains further information and guidance as to the status of applicant's license for foreign filing.

Applicants may wish to consult the USPTO booklet, "General Information Concerning Patents" (specifically, the section entitled "Treaties and Foreign Patents") for more information on timeframes and deadlines for filing foreign patent applications. The guide is available either by contacting the USPTO Contact Center at 800-786-9199, or it can be viewed on the USPTO website at http://www.uspto.gov/web/offices/pac/doc/general/index.html.

For information on preventing theft of your intellectual property (patents, trademarks and copyrights), you may wish to consult the U.S. Government website, http://www.stopfakes.gov. Part of a Department of Commerce initiative, this website includes self-help "toolkits" giving innovators guidance on how to protect intellectual property in specific countries such as China, Korea and Mexico. For questions regarding patent enforcement issues, applicants may call the U.S. Government hotline at 1-866-999-HALT (1-866-999-4158).

LICENSE FOR FOREIGN FILING UNDER
Title 35, United States Code, Section 184
Title 37, Code of Federal Regulations, 5.11 & 5.15

GRANTED

The applicant has been granted a license under 35 U.S.C. 184, if the phrase "IF REQUIRED, FOREIGN FILING LICENSE GRANTED" followed by a date appears on this form. Such licenses are issued in all applications where the conditions for issuance of a license have been met, regardless of whether or not a license may be required as set forth in 37 CFR 5.15. The scope and limitations of this license are set forth in 37 CFR 5.15(a) unless an earlier license has been issued under 37 CFR 5.15(b). The license is subject to revocation upon written notification. The date indicated is the effective date of the license, unless an earlier license of similar scope has been granted under 37 CFR 5.13 or 5.14.

This license is to be retained by the licensee and may be used at any time on or after the effective date thereof unless it is revoked. This license is automatically transferred to any related applications(s) filed under 37 CFR 1.53(d). This license is not retroactive.

The grant of a license does not in any way lessen the responsibility of a licensee for the security of the subject matter as imposed by any Government contract or the provisions of existing laws relating to espionage and the national security or the export of technical data. Licensees should apprise themselves of current regulations especially with respect to certain countries, of other agencies, particularly the Office of Defense Trade Controls, Department of State (with respect to Arms, Munitions and Implements of War (22 CFR 121-128)); the Bureau of Industry and Security, Department of Commerce (15 CFR parts 730-774); the Office of Foreign Assets Control, Department of Treasury (31 CFR Parts 500+) and the Department of Energy.

NOT GRANTED

No license under 35 U.S.C. 184 has been granted at this time, if the phrase "IF REQUIRED, FOREIGN FILING LICENSE GRANTED" DOES NOT appear on this form. Applicant may still petition for a license under 37 CFR 5.12, if a license is desired before the expiration of 6 months from the filing date of the application. If 6 months has lapsed from the filing date of this application and the licensee has not received any indication of a secrecy order under 35 U.S.C. 181, the licensee may foreign file the application pursuant to 37 CFR 5.15(b).

UNITED STATES PATENT AND TRADEMARK OFFICE

Commissioner for Patents
United States Patent and Trademark Office
P.O. Box 1450
Alexandria, VA 22313-1450
www.uspto.gov

COPY MAILED

MAY 0 1 2006

OFFICE OF PETITIONS

SHELL OIL COMPANY
P.O. BOX 2463
HOUSTON TX 77252-2463

In re Application of	:	
Eit Drent et al	:	
Application No. 10/669,916	:	ON PETITION
Filed: September 24, 2003	:	
Attorney Docket No. TS0934(US)	:	

This is a decision on the petition, filed April 24, 2006, under 37 CFR 1.313(c)(2) to withdraw the above-identified application from issue after payment of the issue fee.

The petition is **GRANTED.**

The above-identified application is withdrawn from issue for consideration of a submission under 37 CFR 1.114 (request for continued examination). See 37 CFR 1.313(c)(2).

Petitioner is advised that the issue fee paid on October 19, 2005, in the above-identified application cannot be refunded. If, however, the above-identified application is again allowed, petitioner may request that it be applied towards the issue fee required by the new Notice of Allowance.[1]

Telephone inquiries should be directed to the undersigned at (571) 272-3208.

The examiner of Technology Center AU 1621 will consider the request for continued examination under 37 CFR 1.114.

Karen Creasy

Karen Creasy
Petitions Examiner
Office of Petitions

---

[1] The request to apply the issue fee to the new Notice may be satisfied by completing and returning the new Issue Fee Transmittal Form PTOL-85(b), which includes the following language thereon: "Commissioner for Patents is requested to apply the Issue Fee and Publication Fee (if any) or re-apply any previously paid issue fee to the application identified above." Petitioner is advised that, whether a fee is indicated as being due or not, the Issue Fee Transmittal Form **must** be completed and timely submitted to avoid abandonment. Note the language in bold text on the first page of the Notice of Allowance and Fee(s) Due (PTOL-85).

UNITED STATES PATENT AND TRADEMARK OFFICE

Commissioner for Patents
United States Patent and Trademark Office
P.O. Box 1450
Alexandria, VA 22313-1450
www.uspto.gov

TENSORCOMM, INC.
1490 W. 121TH AVENUE, SUITE 105
WESTMINSTER, CO 80234

COPY MAILED

JAN 1 1 2005

OFFICE OF PETITIONS

In re Application of :
Anand P. Narayan et al :
Application No. 10/669,954 :
Filed: September 23, 2003 :
Attorney Docket No. TCOM0007 :

ON PETITION

This is a decision on the petition under 37 CFR 1.137(b), filed November 23, 2004, to revive the above-identified application.

The petition is **GRANTED**.

The above-identified application became abandoned for failure to reply in a timely manner to the Notice to File Corrected Application Papers (Notice) mailed December 17, 2003. The Notice set a period for reply of two (2) months from the mail date of the Notice. No extensions of time under the provisions of 37 CFR 1.136(a) were obtained. Accordingly, the above-identified application became abandoned on February 18, 2004.

Telephone inquiries concerning this decision should be directed to Irvin Dingle at (571) 272-3210.

This matter is being forwarded to the Initial Patent Examination Unit.

Irvin Dingle
Petitions Examiner
Office of Petitions
Office of the Deputy Commissioner
for Patent Examination Policy

UNITED STATES PATENT AND TRADEMARK OFFICE

COMMISSIONER FOR PATENTS
UNITED STATES PATENT AND TRADEMARK OFFICE
P.O. BOX 1450
ALEXANDRIA, VA 22313-1450
www.uspto.gov

Docketing Department
HOWREY SIMON ARNOLD & WHITE, LLP
1299 Pennsylvania Avenue, NW
Box No. 34
Washington, DC 20004-2402

COPY MAILED

JAN 12 2005

OFFICE OF PETITIONS

In re Application of :
Choi : DECISION ON PETITION
Application No. 10/670,003 :
Filed: September 25, 2003 :
Dkt. No.: 6192.0181.C1 :

This is a decision on the "PETITION UNDER 37 C.F.R. § 1.78," filed July 8, 2004, to accept an unintentionally delayed claim under 35 USC 120 for the benefit of the prior filed nonprovisional application set forth in the concurrently filed amendment.

The petition is **GRANTED**.

A petition for acceptance of a claim for late priority under 37 CFR 1.78(a)(3) is only applicable to those applications filed on or after November 29, 2000. Further, the petition is appropriate only after the expiration of the period specified in 37 CFR §§ 1.78(a)(2)(ii). In addition, the petition under 37 CFR 1.78(a)(3) must be accomplished by:

(1) the reference required by 35 USC 120 and 37 CFR 1.78(a)(2) to the prior-filed application, unless previously submitted;
(2) the surcharge set forth in § 1.17(t); and
(3) a statement that the entire delay between the date the claim was due under 37 CFR §§ 1.78(a)(2)(ii) and the date the claim was filed was unintentional. The Director may require additional information where there is a question whether the delay was unintentional.

The instant Nonprovisional application was filed after November 29, 2000 on September 25, 2003 and was pending at the time of filing of the instant petition. The claim for the benefit of priority to the prior-filed Nonprovisional application was submitted after expiration of the period specified in 37 CFR

1.78(a)(2)(ii). The reference to the prior-filed Nonprovisional application was submitted during the pendency of the instant nonprovisional application for which the claim for benefit of priority is sought. *See*, 35 USC 120. Accordingly, having found that the instant petition for acceptance of an unintentionally delayed claim for the benefit of priority under 35 USC 120 to the prior-filed nonprovisional application satisfies the conditions of 37 CFR 1.78(a)(3), the petition is hereby **GRANTED**.

The granting of the petition to accept the delayed benefit claim to the prior-filed application under 37 CFR 1.78(a)(3) should not be construed as meaning that the instant application is entitled to the benefit of the prior-filed application. In order for the instant application to be entitled to the benefit of the prior-filed application, all other requirements under 35 USC 120 and 37 CFR 1.78(a)(1) and (a)(2) must be met. Similarly, the fact that a corrected filing receipt was mailed prior to the mailing of this decision on petition and included the prior-filed application should not be construed as meaning that application is entitled to the claim for benefit of priority to the prior filed application noted thereon. The examiner will, in due course, consider this benefit claim and determine whether the instant application is entitled to the benefit of the earlier filing date.

A Corrected Filing Receipt, which included the priority claim to the prior-filed nonprovisional application, was previously mailed. Therefore, this decision is not accompanied by an additional Corrected Filing Receipt.

Inquiries concerning this decision may be directed to Petitions Attorney Alesia M. Brown at (571) 272-3205.

This application is being forwarded to Technology Center 2800 for further processing.

Charles Pearson
Director
Office of Petitions
Office of the Deputy Commissioner
For Patent Examination Policy

UNITED STATES PATENT AND TRADEMARK OFFICE

Commissioner for Patents
United States Patent and Trademark Office
P.O. Box 1450
Alexandria, VA 22313-1450
www.uspto.gov

John Wiley Horton, Attorney
Pennington, Moore, Wilkinson, Bell & Dunbar, P.A.
2nd Floor
215 S. Monroe St.
Tallahassee FL 32301

COPY MAILED

DEC 22 2005

OFFICE OF PETITIONS

In re Application of :
Bruckhart et al. :
Application No. 10/670,007 :
Filed: September 24, 2003 :
Title: Method and Apparatus for Securing a :
Tee Shirt to a Bra

ON PETITION

This is a decision on the petition under 37 CFR 1.181 to withdraw the holding of abandonment, filed March 14, 2005.

The petition to withdraw the holding of abandonment is **GRANTED**.

This application was held abandoned September 17, 2005 for failure to timely reply to the non-final Office Action mailed on June 16, 2004. The non-final Office Action set a three (3) month extendable time period for reply. A Notice of Abandonment was mailed January 11, 2005.

Petitioner asserts that a reply to the non-final Office Action was timely submitted on September 2, 2004. As evidence, petitioner has submitted a copy of the reply which contains a certificate of mailing pursuant to 37 CFR 1.8.

The response submitted September 2, 2004 has not been located in the Office, however, in view of the evidence submitted, the response is deemed timely.

The Notice of Abandonment is hereby vacated and the holding of abandonment is withdrawn.

The address on the petition differs from the correspondence address of record. While a courtesy copy of this decision is being mailed to the person signing the present petition, all future correspondence will be directed to the address currently of record until such time as appropriate instructions are received to the contrary.

The application file is being forwarded to the Technology Center 3700 for further processing.

Telephone inquiries concerning this matter should be directed to the undersigned at (571) 272-3215.

Charlema R Grant

Charlema R. Grant
Petitions Attorney
Office of Petitions

cc: John Wiley Horton
Pennington, Moore, Wilkinson, Bell
and Dunbar, P.A.
P.O. Drawer 10095
Tallahassee, FL 32302-2095

UNITED STATES PATENT AND TRADEMARK OFFICE

Commissioner for Patents
United States Patent and Trademark Office
P.O. Box 1450
Alexandria, VA 22313-1450
www.uspto.gov

MCKEE, VOORHEES & SEASE, P.L.C.
ATTN: PENNSYLVANIA STATE UNIVERSITY
801 GRAND AVENUE, SUITE 3200
DES MOINES, IA 50309-2721

COPY MAILED

MAY 16 2005

OFFICE OF PETITIONS

In re Application of
Cosgrove et al.
Application No. 10/670,009
Filed: September 24, 2003
Attorney Docket No. P04666US08
For: Purified Plant Expansin Proteins and DNA Encoding Same

DECISION REFUSING TO ACCORD STATUS UNDER 37 CFR 1.47(a)

This is a decision on the petition under 37 CFR 1.47(a), filed September 20, 2004.

The petition is **DISMISSED**.

Any request for reconsideration of this decision must be submitted within TWO (2) MONTHS from the mail date of this decision. Extensions of time under 37 CFR 1.136(a) are permitted. Any response should be entitled "Request for Reconsideration of Petition Under 37 CFR 1.47(a)" and may include an oath or declaration executed by the current non-signing inventor(s). **Failure to respond will result in abandonment of the application.**

An additional fee is not necessary for the Request for Reconsideration unless petitioner requests an extension of time.

The petition cannot be granted at this time because the last known address listed for Jun Shi on the petition filed September 20, 2004, differs from the address listed on the declaration filed September 20, 2004. The problem can be resolved by simply filing an Application Data Sheet listing the most recent known address for Jun Shi.

In an attempt to provide assistance, the undersigned performed several internet searches to locate Jun Shi. The Office supplies the resulting information merely as a courtesy. The instant petition includes sufficient proof under 37 CFR 1.47 that the non-signing inventor cannot be found or reached after diligent effort. Petitioner is not required to take any further steps to locate or communicate with Shi. Jun Shi may currently reside at one of the following addresses:

1400 Martin Street
State College, PA 16803-3075

208 Mueller Lab
Apt. F
University Park, PA 16802

550 S. Dupont Hwy.
Apt. 18
New Castle, DE 19720-5193

If petitioner locates Shi and sends her a copy of the declaration, petitioner may wish to include a copy of the application. Shi may not wish to sign a declaration that states she has reviewed the application until she is given a copy of the application.

Further correspondence with respect to this matter should be addressed as follows:

By mail: Mail Stop Petition
Commissioner for Patents
P.O. Box 1450
Alexandria, VA 22313-1450

By facsimile: (703) 872-9306
Attn: Office of Petitions

By hand: U.S. Patent and Trademark Office
Customer Service Window
Randolph Building
401 Dulany Street
Alexandria, VA 22314

If a request for reconsideration is filed, and a decision on the new petition is not received within three months, petitioner may wish to call the number below to check on the status of the renewed petition.

Telephone inquiries concerning the instant decision should be directed to Petitions Attorney Steven Brantley at (571) 272-3203.

Charles Steven Brantley
Petitions Attorney
Office of Petitions

UNITED STATES PATENT AND TRADEMARK OFFICE

Commissioner for Patents
United States Patent and Trademark Office
P.O. Box 1450
Alexandria, VA 22313-1450
www.uspto.gov

MCKEE, VOORHEES & SEASE, P.L.C.
ATTN: PENNSYLVANIA STATE UNIVERSITY
801 GRAND AVENUE, SUITE 3200
DES MOINES, IA 50309-2721

COPY MAILED

AUG 19 2005

OFFICE OF PETITIONS

In re Application of
Cosgrove et al.
Application No. 10/670,009
Filed: September 24, 2003
Attorney Docket No. P04666US08
For: Purified Plant Expansin Proteins and DNA Encoding Same

DECISION ACCORDING STATUS UNDER 37 CFR 1.47(a)

This is a decision on the renewed petition under 37 CFR 1.47(a), filed June 8, 2005.

The petition is **granted**.

The above-identified application and papers have been reviewed and found in compliance with 37 CFR 1.47(a). This application is hereby accorded Rule 1.47(a) status.

As provided in Rule 1.47(c), this Office will forward notice of this application's filing to the non-signing inventor at the address given in the petition. Notice of the filing of this application will also be published in the Official Gazette.

The Office of Initial Patent Examination will be informed of the instant decision so that it may continue to prepare the application for examination.

Telephone inquiries concerning this decision should be directed to Petitions Attorney Steven Brantley at (571) 272-3203.

Charles Steven Brantley
Petitions Attorney
Office of Petitions

SPE RESPONSE FOR CERTIFICATE OF CORRECTION

Paper No.: X

DATE : **AUGUST 14, 2007**

TO SPE OF : ART UNIT **1652**

SUBJECT : Request for Certificate of Correction for Appl. No.: **10/670,009** Patent No.: **7226756 B2**

A response is requested with respect to a request for a certificate of correction.

With respect to the change(s) requested to correct Office and/or Applicant's errors, should the patent read as shown in the certificate of correction attached herewith or the COCIN document(s), in IFW images for the above-identified patented application? No new matter should be introduced, nor should the scope or meaning of the claims be changed.

If the response is for an IFW, within **7** days, please complete and forward the response, to the employee (named below) via scanning into application images, using document code **COCX**.

DO NOT SENT TO ATTORNEY

If the response is for a paper file wrapper, please complete the response and forward the response with the paper file wrapper, to the employee (named below), within **7** days, to:

Certificates of Correction Branch (CofC)
South Tower - 9A22
Palm Location 7580

LAMONTE NEWSOME
Certificates of Correction Branch
703-308-9390 ext. 113

Thank You For Your Assistance

The request for issuing the above-identified correction(s) is hereby:
Note your decision on the appropriate box.

☒ **Approved**	**All** changes apply.
☐ **Approved in Part**	Specify below which changes **do not** apply.
☐ **Denied**	State the reasons for denial below.

Comments: _____

_____

_____

_____

_____

SPE **Art Unit** 1652

UNITED STATES PATENT AND TRADEMARK OFFICE

Commissioner for Patents
United States Patent and Trademark Office
P.O. Box 1450
Alexandria, VA 22313-1450
www.uspto.gov

COPY MAILED

NOV 18 2009

OFFICE OF PETITIONS

BERNARD MALINA
MALINA & WOLSON
SUITE 501
60 EAST 42ND STREET
NEW YORK NY 10165

In re Application of	:	
Vivienne Johan Cambridge	:	
Application No. 10/670,030	:	ON PETITION
Filed: September 24, 2003	:	
Attorney Docket No. MS-783-A	:	

This is a decision on the petition to revive under 37 CFR 1.137(b), filed September 24, 2009.

The petition under 37 CFR 1.137(b) is **GRANTED**.

The above-identified application became abandoned for failure to timely file a reply in response to the non-final Office action, mailed July 20, 2007. This Office action set a shortened statutory period for reply of three months. No reply having been received, the application became abandoned on October 21, 2007. The Office mailed a Notice of Abandonment on February 21, 2008.

With the instant petition, applicants paid the petition fee, made the proper statement of unintentional delay, and filed an RCE.

An RCE is only appropriate when prosecution in an application has closed. As prosecution in the instant application has not closed, the RCE will not be entered, and the RCE fee is being refunded to petitioner under separate cover. As the RCE was accompanied by an Amendment, the Amendment will be forwarded to the examiner for consideration.

The application is being forwarded to Group Art Unit 3684 for consideration of the Amendment, filed September 14, 2009.

Telephone inquiries related to this decision should be directed to the undersigned at (571)272-3207.

Cliff Congo
Petitions Attorney
Office of Petitions

UNITED STATES PATENT AND TRADEMARK OFFICE

Commissioner for Patents
United States Patent and Trademark Office
P.O. Box 1450
Alexandria, VA 22313-1450
www.uspto.gov

WENDEROTH, LIND & PONACK, L.L.P.
2033 K STREET N. W.
SUITE 800
WASHINGTON DC 20006-1021

MAIL

FEB 22 2007
DIRECTOR OFFICE
TECHNOLOGY CENTER 2600

In re Application of
OHTA, YUUSAKU, et al.
Application No. 10/670,053
Filed: September 25, 2003
For: **CONTENT DISTRIBUTION SYSTEM**

DECISION ON PETITION
TO MAKE SPECIAL

This is a decision on the petition filed August 23, 2006 under Manual of Patent Examination Procedure §708.02, VIII, requesting accelerated examination.

The petition under Manual of Patent Examination Procedure §708.02, VIII, must:
(1) be filed prior to receiving any examination by the examiner,
(2) be accompanied by the required fee- $130,
(3) the claims should be directed to a single invention (if it is determined that the claims pertain to more than one invention, then applicant will have to make an election without traversé or forfeit accelerated examination status),
(4) state that a pre-examination search was made, and fully discuss the search method employed, such as classes and subclasses searched, publications, Chemical abstracts, patents, etc. A search made by a foreign patent office satisfies this requirement,
(5) be accompanied by a copy of each of the references most closely related to the subject matter encompassed by the claims if said references are not already of record,
(6) fully discuss the references, pointing out with the particularity required by 37 C.F.R. §1.111 (b) and (c), how the claimed subject matter is patentable over the references.

The petitioner meets all the above-listed requirements. Accordingly, the petition is **GRANTED**.

The application will retain its special status throughout its entire prosecution, including any appeal to the Board of Patent Appeals and Interferences, subject only to diligent prosecution by the applicant. The application file is being forwarded to the examiner for appropriate action in due course.

Michael Horabik
Quality Assurance Specialist
Technology Center 2600
Communications

UNITED STATES PATENT AND TRADEMARK OFFICE

Commissioner for Patents
United States Patent and Trademark Office
P.O. Box 1450
Alexandria, VA 22313-1450
www.uspto.gov

MORGAN LEWIS & BOCKIUS LLP
1111 PENNSYLVANIA AVENUE NW
WASHINGTON, DC 20004

COPY MAILED

JAN 16 2007

OFFICE OF PETITIONS

In re Application of	:
In Ho Ahn et al	:
Application No. 10/670,057	: DECISION ON PETITION
Filed: September 25, 2003	: UNDER 37 CFR 1.181
Attorney Docket No. 041501-5580	:

This is a decision on the petition under 37 CFR 1.137((b), filed June 20, 2006, which, for the reason stated below, is being treated as a petition under 37 CFR 1.181 requesting that the holding of abandonment in this application be withdrawn and the Notice of Abandonment vacated.

The petition treated under 37 CFR 1.181 is **GRANTED**.

The above-identified application was held abandoned for failure to reply in a timely manner to the non-final Office action mailed September 5, 2005, which set a shortened statutory period for reply of three (3) months. No extensions of time under the provisions of 37 CFR 1.136(a) were obtained. A Notice of Abandonment was mailed on June 13, 2006.

Petitioner states that, on December 2, 2005, a reply in response to the September 7, 2005 Office action was filed. In support of this allegation, petitioner has submitted copies of the previously filed documents and a USPTO-stamped return addressed postcard which acknowledges receipt of an "Amendment Transmittal Form" and an "Amendment in response to the September 7, 2005 Office Action." The postcard receipt bears the application number of the present application. However, petitioner explains that the application number was incorrectly identified on the first page of the Amendment Transmittal Form, as well as on the first page of the Amendment but that all other pertinent information, such as the attorney docket number, filing date, title of the invention, inventors' names, examiner's name, art unit number, and confirmation number were correct.

A review of the file record for this case discloses that the papers filed on December 2, 2005, bearing the incorrect application number of 09/670,057, rather than the present application number, No. 10/670,057, have been associated with this file. It is noted that the papers were annotated with the correct series code for the application papers. It is also noted that the papers otherwise correctly identified the present application. It is the policy of the office that a response having an incorrect application number is handled in accordance with MPEP 508.03. If a paper having an incorrect application number contains sufficient information to identify the correct application and was timely filed, the holding of abandonment will be withdrawn. In reviewing the papers submitted, it is concluded that the information contained thereon was sufficient to associate the papers with the instant file and, as noted above, the papers filed on December 2, 2005 directed to another application have, in fact, now been associated with this file.

In view of the above, the holding of abandonment is hereby **withdrawn** and the Notice of Abandonment mailed on June 13, 2006 is **vacated**.

Petitioner is cautioned to ensure that the correct identifying data appears on all correspondence submitted to the USPTO to avoid situations of the nature which occurred in the present application.

A petition to withdraw the holding of abandonment under 37 CFR 1.181 does not require payment of a fee. Accordingly, the $1,500 petition fee submitted will be refunded to petitioner's deposit account in due course.

Inquiries concerning this decision on petition may be directed to the undersigned at (571) 272-3218. Inquiries concerning either the examination or status of this application should be directed to the Technology Center.

This application is being referred to Technology Center AU 2875 for appropriate action in the normal course of business on the reply received December 2, 2005.

Frances Hicks
Petitions Examiner
Office of Petitions

UNITED STATES PATENT AND TRADEMARK OFFICE

Commissioner for Patents
United States Patent and Trademark Office
P.O. Box 1450
Alexandria, VA 22313-1450
www.uspto.gov

BRACEWELL & PATTERSON, L.L.P.
Attention: Albert B. Kimball, Jr.
P.O. Box 61389
Houston TX 77208-1389

COPY MAILED

AUG 20 2007

OFFICE OF PETITIONS

In re Application of
Afif
Application No. 10/670,076
Filed: September 24, 2003
Title: Flexible Laminate For Coating and Protection of Surfaces

ON PETITION

This is a decision on the petition under 37 CFR 1.137(b), filed June 1, 2007, to revive the above-identified application.

This above-identified application became abandoned for failure to timely file a complete reply to the non-final Office Action of January 30, 2006. An amendment and three month extension of time were filed on August 2, 2006(certificate of mailing July 31, 2006). In response to the amendment a Notice of Non-Compliant Amendment (37 CFR 1.121) was mailed on August 24, 2006 which set an extendable reply period of one month. A timely reply to the Notice of Non-Compliant Amendment was not received. This application became abandoned on September 25, 2006. A Notice of Abandonment was mailed on April 2, 2007.

The statement of unintentional delay presented in the petition does not comply with the current rule. Pursuant to 37 CFR 1.137(b)(3) a statement that "the entire delay in filing the required reply from the due date for the reply until the filing of a grantable petition pursuant to 37 CFR 1.137(b) was unintentional" is required. However, the statement presented will be accepted and construed as the statement required by 37 CFR 1.137(b)(3). Petitioner must notify the Office if this is **not** a correct interpretation of the statement contained in the instant petition.

The requirements to revive a petition under 37 CFR §1.137(b) have been met. This petition is hereby Granted.

The office hereby acknowledges the receipt of the Amendment submitted with the instant petition.

This application is being forwarded to Technology Center 1700 for further processing.

Telephone inquiries concerning this matter should be directed to the undersigned at (571) 272-3215.

Charlema R. Grant

Charlema R. Grant
Petitions Attorney
Office of Petitions

UNITED STATES PATENT AND TRADEMARK OFFICE

UNITED STATES DEPARTMENT OF COMMERCE
United States Patent and Trademark Office
Address: COMMISSIONER FOR PATENTS
P.O. Box 1450
Alexandria, Virginia 22313-1450
www.uspto.gov

APPLICATION NO.	FILING DATE	FIRST NAMED INVENTOR	ATTORNEY DOCKET NO.	CONFIRMATION NO.
10/670,095	09/24/2003	Lotfi Hedhli	3055-002-02	6275

EXAMINER
CHEUNG, WILLIAM K

ART UNIT	PAPER NUMBER
1713	

33432 7590 11/10/2004
KILYK & BOWERSOX, P.L.L.C.
53 A EAST LEE STREET
WARRENTON, VA 20186

DATE MAILED: 11/10/2004

Please find below and/or attached an Office communication concerning this application or proceeding.

UNITED STATES PATENT and TRADEMARK OFFICE

COMMISSIONER FOR PATENTS
UNITED STATES PATENT AND TRADEMARK OFFICE
P.O. BOX 1450
ALEXANDRIA, VA 23313-1450
WWW.USPTO.GOV

Mailed:

DWW
Paper No.

In re Application of Hedhli et al.
Serial No.: 10/670,095
Filed: September 24, 2003

DECISION ON PETITION UNDER *37 CFR 1.48(a)*

Title: FLUOROPOLYMER RESINS CONTAINING IONIC OR IONIZABLE GROUPS AND PRODUCTS CONTAINING THE SAME

This is a decision on the PETITION TO CORRECT INVENTORSHIP IN A NON-PROVISIONAL PATENT APPLICATION filed August 25, 2004 to correct inventorship under 37 CFR 1.48(a) by adding the names of Michael Foure and Ramin Amin-Sanayei to the list of inventors of the instant application.

It is noted that the applicant has met the requirements of 37 C.F.R. § 1.48(a) by (1) submitting a request to correct the inventorship that sets forth the desired inventorship change; (2) providing a statement from each person being added as an inventor that the error in inventorship occurred without deceptive intention on his or her part; (3) providing a declaration of the actual inventors as required by 37 C.F.R. § 1.63; (4) providing the processing fee set forth in 1.17(i); and, (5) providing the written consent of the assignee.

The request is **GRANTED**.

The application file is being forwarded to the appropriate section of the Patent and Trademark Office for correction of the record.

David W. Wu
Supervisory Patent Examiner
Art Unit 1713
Technology Center 1700

KILYK & BOWERSON, P.L.L.C.
53 A East Lee Street
Warrenton, VA 20186

RECEIVED
CENTRAL FAX CENTER
AUG 2 5 2004

I hereby certify that this correspondence is being facsimile transmitted to the United States Patent and Trademark Office, Fax No. 1-703-872-9306 on August 25, 2004.

Donald S. Prater — Donald S. Prater
Name (Print) — *Signature*

IN THE UNITED STATES PATENT AND TRADEMARK OFFICE

In re Application of: Hedhli et al.	)	Examiner: William K. Cheung
Application Number: 10/670,095	)	Group Art Unit: 1713
Filed: September 24, 2003	)	Confirmation No.: 6275
Atty. Docket No.: 3055-002-02	)	Customer No.: 33432

For: FLUOROPOLYMER RESINS CONTAINING IONIC OR IONIZABLE GROUPS AND PRODUCTS CONTAINING THE SAME

REQUEST FOR CORRECTION OF INVENTORSHIP OF A PATENT APPLICATION UNDER 37 C.F.R. § 1.48

Commissioner for Patents
P.O. Box 1450
Alexandria, VA 22313-1450

August 25, 2004

Sir:

Pursuant to 37 C.F.R. § 1.48 as well as 35 U.S.C. § 116, a correction of inventorship in the above-identified U.S. patent application is hereby requested.

A copy of the same attachments submitted in the Request for Correction of Inventorship of a Patent Application under 37 C.F.R. § 1.48 filed in the parent application, Application No. 09/774,266, is attached. Upon investigating the inventorship of the above-identified U.S. patent application, it has been determined that the executed § 1.63 declaration previously filed in the parent application and herein is in error and that the error arose without any deceptive intention on the part of the person who through error was not named as an inventor. By this filing, a correction of the inventorship is hereby requested and it is requested that inventorship be amended to name two additional inventors not previously set forth in the previously executed § 1.63 declaration.

To accompany this Request for Correction of Inventorship, a request to correct inventorship that sets forth the desired inventorship change is attached as Attachment A.

08/27/2004 CNGUYEN 00000108 10670095
01 FC:1460 130.00 OP

U.S. Patent Application No. 10/670,095
Request for Correction of Inventorship of a Patent Application

A statement from each person being added as an inventor which states that the error in inventorship occurred without deceptive intention on his or her part is set forth as Attachment B.

An oath or declaration by the actual inventors as required by § 1.63 is set forth as Attachment C.

The processing fee as set forth in § 1.17(i) is enclosed with the credit card payment form.

Finally, the written consent of the assignee to this correction of inventorship is also enclosed and attached as Attachment D.

In view of the above submissions, correction of the inventorship is respectfully requested.

In the event that any additional fees are due in connection with this paper, please charge such fees to Deposit Account No. 50-0925.

Respectfully submitted,

Luke A. Kilyk
Reg. No. 33,251

Atty. Docket No. 3055-002-02
KILYK & BOWERSOX, P.L.L.C.
53 A East Lee Street
Warrenton, VA 20186
Tel.: (540) 428-1701
Fax: (540) 428-1720
Enclosures: Attachments A-D

ATTACHMENT A - Request to Correct Inventorship

INVENTORSHIP READS:

Lotfi HEDHLI

Laurent BILLON

INVENTORSHIP SHOULD READ:

Lotfi HEDHLI

Laurent BILLON

Michel FOURE

Ramin AMIN-SANAYEI

RECEIVED
CENTRAL FAX CENTER
AUG 2 5 2004

I hereby certify that this correspondence is being facsimile transmitted to the United States Patent and Trademark Office, Fax No. 1-703-872-9306 on July 30, 2004.

Donald Prater Donald S. Prater
Name (Print) Signature

IN THE UNITED STATES PATENT AND TRADEMARK OFFICE

In re Application of: HEDHLI et al.	)	Examiner: William K. Cheung
Application Number: 09/774,266	)	Group Art Unit: 1713
Filed: January 30, 2001	)	Confirmation No.: 9985
Docket No.: 3055-002-01	)	Customer No.: 33432

For: FLUOROPOLYMER RESINS CONTAINING IONIC OR IONIZABLE GROUPS AND PRODUCTS CONTAINING THE SAME

STATEMENT FROM PERSON BEING ADDED AS AN INVENTOR

Commissioner for Patents
P.O. Box 1450
Alexandria, VA 22313-1450

Sir:

I, Michel Foure, due declare and state as follows:

1) I believe that I am one of the inventors of U.S. Patent Application No. 09/774,266. The fact that I was not named as an inventor earlier was in error and this error in inventorship occurred without any deceptive intention on my part.

I hereby declare that all statement made herein of my own knowledge are true and that all statements made on information and belief are believed to be true; and further that these statements were made with the knowledge that willful false statements and the like so made are punishable by fine or imprisonment, or both, under Section 1001 of Title 18 of the United States Code and that such willful false statements may jeopardize the validity of the application or any patent issued thereon.

Michel Foure

7-23-2004
Date

RECEIVED
CENTRAL FAX CENTER
AUG 2 5 2004

I hereby certify that this correspondence is being facsimile transmitted to the United States Patent and Trademark Office, Fax No. 1-703-872-9306 on July 30, 2004.

Donald Prater
Name (Print)

Donald S. Prater
Signature

IN THE UNITED STATES PATENT AND TRADEMARK OFFICE

In re Application of: HEDHLI et al.	)	Examiner: William K. Cheung
Application Number: 09/774,266	)	Group Art Unit: 1713
Filed: January 30, 2001	)	Confirmation No.: 9985
Docket No.: 3055-002-01	)	Customer No.: 33432

For: FLUOROPOLYMER RESINS CONTAINING IONIC OR IONIZABLE GROUPS AND PRODUCTS CONTAINING THE SAME

STATEMENT FROM PERSON BEING ADDED AS AN INVENTOR

Commissioner for Patents
P.O. Box 1450
Alexandria, VA 22313-1450

Sir:

I, Ramin Amin-Sanayei, due declare and state as follows:

1) I believe that I am one of the inventors of U.S. Patent Application No. 09/774,266. The fact that I was not named as an inventor earlier was in error and this error in inventorship occurred without any deceptive intention on my part.

I hereby declare that all statement made herein of my own knowledge are true and that all statements made on information and belief are believed to be true; and further that these statements were made with the knowledge that willful false statements and the like so made are punishable by fine or imprisonment, or both, under Section 1001 of Title 18 of the United States Code and that such willful false statements may jeopardize the validity of the application or any patent issued thereon.

Ramin Amin-Sanayei

July 23, 04
Date

Docket No. 3055-002-01 KILYK & BOWERSOX, P.L.L.C.

Declaration for U.S. Patent Application

As a below named inventor, We/I hereby declare that:

Our residence, post office address and citizenship are as stated below next to our names.

We/I believe We/I are the original, first and sole inventor (if only one name is listed below) or an original, first and joint inventor (if plural names are listed below) of the subject matter which is claimed and for which a patent is sought on the invention entitled FLUOROPOLYMER RESINS CONTAINING IONIC OR IONIZABLE GROUPS AND PRODUCTS CONTAINING THE SAME, the application of which is attached hereto unless the following is checked

☒ was filed on January 30, 2001, as United States Application Number 09/774,266 and
☒ was amended on February 13, 2001, May 3, 2001, September 4, 2003, January 14, 2004, and March 12, 2004 (if applicable).

We/I hereby state that We/I have reviewed and understand the contents of the above-identified specification, including the claim(s), as amended by any amendment referred to above.

We/I acknowledge the duty to disclose information which is material to patentability as defined in Title 37, Code of Federal Regulations, § 1.56.

We/I hereby claim foreign priority benefits under Title 35, United States Code, § 119 (a) - (d) of any foreign application(s) for patent or inventor's certificate listed below and have also identified below any foreign application for patent or inventor's certificate having a filing date before that of the application for which priority is claimed:

				Priority Claimed
(List prior foreign applications.)	(Number)	(Country)	(Day/Month/Year Filed)	___ Yes ___ No
	(Number)	(Country)	(Day/Month/Year Filed)	___ Yes ___ No
	(Number)	(Country)	(Day/Month/Year Filed)	___ Yes ___ No
	(Number)	(Country)	(Day/Month/Year Filed)	___ Yes ___ No

___ See attached list for additional prior foreign applications

We/I hereby claim the benefit under Title 35, United States Code, § 120 or § 119(e) of any United States application(s) listed below and, insofar as the subject matter of each of the claims of this application is not disclosed in the prior United States application in the manner provided by the first paragraph of Title 35, United States Code, § 112, We/I acknowledge the duty to disclose information which is material to patentability as defined in Title 37, Code of Federal Regulations, § 1.56 which became available between the filing date of the prior application and the national or PCT international filing date of this application.

(List Prior U.S. Applications)	60/182,732 (Appln. Serial No.)	February 15, 2000 (Filing Date)	(Status: Patented, Pending, Abandoned)
	(Appln. Serial No.)	(Filing Date)	(Status: Patented, Pending, Abandoned)
	(Appln. Serial No.)	(Filing Date)	(Status: Patented, Pending, Abandoned)

We/I hereby appoint the following attorney(s) and/or agent(s) to prosecute this application and to transact all business in the Patent and Trademark Office connected therewith:

Luke A. Kilyk, Reg. No. 33,251; and Leonard D. Bowersox, Reg. No. 33,226

Please direct all communications to the following address:

Luke A. Kilyk, Esq.
KILYK & BOWERSOX, P.L.L.C.
53 A East Lee Street
Warrenton, VA 20186
Telephone: (540) 428-1701 / Fax: (540) 428-1720

We/I hereby declare that all statements made herein of our own knowledge are true and that all statements made on information and belief are believed to be true; and further that these statements were made with the knowledge that willful false statements and the like so made are punishable by fine or imprisonment, or both, under Title 18 of the United States Code, § 1001 and that such willful false statements may jeopardize the validity of the application or any patent issued thereon.
(See note C above)

Full name of first inventor (given name, family name) Lotfi HEDHLI

Inventor's signature: _____ Date: July 12, 2004

Residence: 561 Traymore Avenue, King of Prussia Pennsylvania 19406 Citizenship: French

Post Office Address: Same as above

Full name of second inventor (given name, family name): Laurent BILLON

Inventor's signature: _____ Date: _____

Residence: _____ Citizenship: French

Post Office Address: Same as above

Full name of third inventor (given name, family name): Michel FOURE

Inventor's signature: _____ Date: 7-15-2004

Residence: 228 Pugh Rd - Wayne, PA 19087-USA Citizenship: French

Post Office Address: Same as above

Full name of fourth inventor (given name, family name): Ramin Amin SANAYEI

Inventor's signature: _____ Date: July 12, 2004

Residence: 1527 College Ave, Collegeville, PA, 19426 Citizenship: USA

Post Office Address: Same as above

PAGE 20/29 * RCVD AT 8/25/2004 2:21:27 PM [Eastern Daylight Time] * SVR:USPTO-EFXRF-1/2 * DNIS:8729306 * CSID:5404281721 * DURATION (mm-ss):10-48

Docket No. 3055-002-01 KILYK & BOWERSOX, P.L.L.C.

Declaration for U.S. Patent Application

As a below named inventor, We/I hereby declare that:

Our residence, post office address and citizenship are as stated below next to our names.

We/I believe We/I are the original, first and sole inventor (if only one name is listed below) or an original, first and joint inventor (if plural names are listed below) of the subject matter which is claimed and for which a patent is sought on the invention entitled FLUOROPOLYMER RESINS CONTAINING IONIC OR IONIZABLE GROUPS AND PRODUCTS CONTAINING THE SAME, the application of which is attached hereto unless the following is checked

☒ was filed on January 30, 2001, as United States Application Number 09/774,266 and
☒ was amended on February 13, 2001, May 3, 2001, September 4, 2003, January 14, 2004, and March 12, 2004 (if applicable).

We/I hereby state that We/I have reviewed and understand the contents of the above-identified specification, including the claim(s), as amended by any amendment referred to above.

We/I acknowledge the duty to disclose information which is material to patentability as defined in Title 37, Code of Federal Regulations, § 1.56.

We/I hereby claim foreign priority benefits under Title 35, United States Code, § 119 (a) - (d) of any foreign application(s) for patent or inventor's certificate listed below and have also identified below any foreign application for patent or inventor's certificate having a filing date before that of the application for which priority is claimed:

				Priority Claimed
(List prior foreign applications.)	(Number)	(Country)	(Day/Month/Year Filed)	___ Yes ___ No
	(Number)	(Country)	(Day/Month/Year Filed)	___ Yes ___ No
	(Number)	(Country)	(Day/Month/Year Filed)	___ Yes ___ No
	(Number)	(Country)	(Day/Month/Year Filed)	___ Yes ___ No

___ See attached list for additional prior foreign applications

We/I hereby claim the benefit under Title 35, United States Code, § 120 or § 119(e) of any United States application(s) listed below and, insofar as the subject matter of each of the claims of this application is not disclosed in the prior United States application in the manner provided by the first paragraph of Title 35, United States Code, § 112, We/I acknowledge the duty to disclose information which is material to patentability as defined in Title 37, Code of Federal Regulations, § 1.56 which became available between the filing date of the prior application and the national or PCT international filing date of this application.

(List Prior U.S. Applications)	60/182,732 (Appln. Serial No.)	February 15, 2000 (Filing Date)	(Status: Patented, Pending, Abandoned)
	(Appln. Serial No.)	(Filing Date)	(Status: Patented, Pending, Abandoned)
	(Appln. Serial No.)	(Filing Date)	(Status: Patented, Pending, Abandoned)

We/I hereby appoint the following attorney(s) and/or agent(s) to prosecute this application and to transact all business in the Patent and Trademark Office connected therewith:

Luke A. Kilyk, Reg. No. 33,251; and Leonard D. Bowersox, Reg. No. 33,226

Please direct all communications to the following address:

Luke A. Kilyk, Esq.
KILYK & BOWERSOX, P.L.L.C.
53 A East Lee Street
Warrenton, VA 20186
Telephone: (540) 428-1701 / Fax: (540) 428-1720

We/I hereby declare that all statements made herein of our own knowledge are true and that all statements made on information and belief are believed to be true; and further that these statements were made with the knowledge that willful false statements and the like so made are punishable by fine or imprisonment, or both, under Title 18 of the United States Code, § 1001 and that such willful false statements may jeopardize the validity of the application or any patent issued thereon.
(See note C above)

Full name of first inventor (given name, family name) Lotfi HEDHLI

Inventor's signature: _____ Date: _____

Residence: 53 Llanfair Road, Ardmore, Pennsylvania 19003 Citizenship: French

Post Office Address: Same as above

Full name of second inventor (given name, family name): Laurent BILLON

Inventor's signature: _____ Date: 07/15/04

Residence: 640 American Avenue, King of Prussia, Pennsylvania 19406 Citizenship: French

Post Office Address: Same as above

Full name of third inventor (given name, family name): Michel FOLIRE

Inventor's signature: _____ Date: _____

Residence: _____ Citizenship: _____

Post Office Address: Same as above

Full name of fourth inventor (given name, family name): Ramin Amin-SANAYEI

Inventor's signature: _____ Date: _____

Residence: _____ Citizenship: _____

Post Office Address: _____

PAGE 22/29 * RCVD AT 8/25/2004 2:21:27 PM [Eastern Daylight Time] * SVR:USPTO-EFXRF-1/2 * DNIS:8729306 * CSID:5404281721 * DURATION (mm-ss):10-48

OIPE AUG 2 5 2004 PATENT & TRADEMARK OFFICE

PTO/SB/98 (08-00)
Approved for use through 10/31/2002. OMB 0651-0031
U.S. Patent and Trademark Office; U.S. DEPARTMENT OF COMMERCE
Under the Paperwork Reduction Act of 1995, no persons are required to respond to a collection of information unless it displays a valid OMB control number.

STATEMENT UNDER 37 CFR 3.73(b) and CONSENT TO CORRECTION

Applicant/Patent Owner: HELHLI et al.

Application No./Patent No.: 09/774,266 Filed/Issued Date: January 30, 2001

Entitled: FLUOROPOLYMER RESINS CONTAINING IONIC OR IONIZABLE GROUPS AND PRODUCTS CONTAINING THE SAME

AtoFina Chemicals, Inc, a Corporation.
(Name of Assignee) (Type of Assignee, e.g., corporation, partnership, university, government agency, etc.)

states that it consents to the correction of inventorship herein and it is:

1. ☒ the assignee of the entire right, title, and interest; or
2. ☐ an assignee of less than the entire right, title and interest.
   The extent (by, percentage) of its ownership interest is _____ %

in the patent application/patent identified above by virtue of either:

A. [x] An assignment from the inventor(s) of the patent application/patent identified above. The assignment was recorded in the United States Patent and Trademark Office at Reel/Frame 011776/0401, or for which a copy thereof is attached.

OR

B. [ ] A chain of title from the inventor(s), of the patent application/patent identified above, to the current assignee as shown below:

1. From:_____ To:_____
   The document was recorded in the United States Patent and Trademark Office at Reel _____, Frame _____, or for which a copy thereof is attached.
2. From:_____ To:_____
   The document was recorded in the United States Patent and Trademark Office at Reel _____, Frame _____, or for which a copy thereof is attached.
3. From:_____ To:_____
   The document was recorded in the United States Patent and Trademark Office at Reel _____, Frame _____, or for which a copy thereof is attached.

[ ] Additional documents in the chain of title are listed on a supplemental sheet.

(x) Copies of assignments or other documents in the chain of title are attached.
[NOTE: A separate copy (*i.e.*, the original assignment document or a true copy of the original document) must be submitted to Assignment Division in accordance with 37 CFR Part 3, if the assignment is to be recorded in the records of the PTO. See MPEP 302.08]

The undersigned (whose title is supplied below) is authorized to act on behalf of the assignee.

7-30-04	Mary G. Fay
Date	Typed or printed name
	Mary Fay
	Signature
	Assistant Secretary
	Title

Burden Hour Statement: This form is estimated to take 0.2 hours to complete. Time will vary depending upon the needs of the individual case. Any comments on the amount of time you are required to complete this form should be sent to the Chief Information Officer, U.S. Patent and Trademark Office, Washington, DC 20231. DO NOT SEND FEES OR COMPLETED FORMS TO THIS ADDRESS. SEND TO: Assistant Commissioner for Patents, Washington, DC 20231.

OIPE JC180
AUG 2 5 2004
PATENT & TRADEMARK OFFICE

UNITED STATES DEPARTMENT OF COMMERCE
Patent and Trademark Office
ASSISTANT SECRETARY AND COMMISSIONER
OF PATENTS AND TRADEMARKS
Washington, D.C. 20231

JULY 25, 2001

PTAS

101713049A

KILYK & BOWERSOX, P.L.L.C.
LUKE A. KILYK
53A LEE STREET
WARRENTON, VA 20186

UNITED STATES PATENT AND TRADEMARK OFFICE
NOTICE OF RECORDATION OF ASSIGNMENT DOCUMENT

THE ENCLOSED DOCUMENT HAS BEEN RECORDED BY THE ASSIGNMENT DIVISION OF THE U.S. PATENT AND TRADEMARK OFFICE. A COMPLETE MICROFILM COPY IS AVAILABLE AT THE ASSIGNMENT SEARCH ROOM ON THE REEL AND FRAME NUMBER REFERENCED BELOW.

PLEASE REVIEW ALL INFORMATION CONTAINED ON THIS NOTICE. THE INFORMATION CONTAINED ON THIS RECORDATION NOTICE REFLECTS THE DATA PRESENT IN THE PATENT AND TRADEMARK ASSIGNMENT SYSTEM. IF YOU SHOULD FIND ANY ERRORS OR HAVE QUESTIONS CONCERNING THIS NOTICE, YOU MAY CONTACT THE EMPLOYEE WHOSE NAME APPEARS ON THIS NOTICE AT 703-308-9723. PLEASE SEND REQUEST FOR CORRECTION TO: U.S. PATENT AND TRADEMARK OFFICE, ASSIGNMENT DIVISION, BOX ASSIGNMENTS, CG-4, 1213 JEFFERSON DAVIS HWY, SUITE 320, WASHINGTON, D.C. 20231.

RECORDATION DATE: 05/04/2001 REEL/FRAME: 011776/0401
NUMBER OF PAGES: 4

BRIEF: ASSIGNMENT OF ASSIGNOR''S INTEREST (SEE DOCUMENT FOR DETAILS).

ASSIGNOR:
HEDHLI, LOFFI DOC DATE: 02/12/2001

ASSIGNOR:
BILLON, LAURENT DOC DATE: 02/09/2001

ASSIGNEE:
ATOFINA CHEMICALS, INC.
2000 MARKET STREET
PHILADELPHIA, PENNSYLVANIA

19103-3222

SERIAL NUMBER: 09774266 FILING DATE: 01/30/2001
PATENT NUMBER: ISSUE DATE:

011776/0401 PAGE 2

JOANN STEWART, EXAMINER
ASSIGNMENT DIVISION
OFFICE OF PUBLIC RECORDS

Form PTO -1619A
Expires 06/30/99
OMB 0651-0027

U.S. Department of Commerce
Patent and Trademark Office
PATENT

OIPE JC179 MAY 0 2 2001 PATENT & TRADEMARK OFFICE

05-11-2001

101713049

SHEET

TO: The Commissioner of Patents and Trademarks: Please record the attached original document(s) or copy(ies).

Submission Type

(X) New

( ) Resubmission (Non-Recordation) Document ID#

( ) Correction of PTO Error Reel # Frame #

( ) Corrective Document Reel # Frame #

OIPE JC90 AUG 2 5 2004 PATENT & TRADEMARK OFFICE

Conveyance Type

(X) Assignment ( ) Security Agreement

( ) License ( ) Change of Name

( ) Merger ( ) Other

U.S. Government
(For Use ONLY by U.S. Government Agencies)

( ) Departmental File ( ) Secret File

Conveying Party(ies) ( )Mark if additional names of conveying parties attached

Name (line 1) Lotfi HEDHLI — Execution Date Month Day Year: 2/12/01

Name (line 2)

Second Party
Name (line 1) Laurent BILLON — Execution Date Month Date Year: 2/9/01

Name (line 2)

Receiving Party ( )Mark if additional names of receiving parties attached

Name (line 1) ATOFINA CHEMICALS, INC.

Name (line 2)

Address (line 1) 2000 Market Street

Address (line 2)

Address (line 3) Philadelphia, city — PA / U.S.A. State/Country — 19103-3222 Zip Code

( ) If document to be recorded is an assignment and the receiving party is not domiciled in the United States, an appointment of a domestic representative is attached. (*Designation must be a separate document from Assignment.*)

Domestic Representative Name and Address Enter for the first Receiving Party only.

Name

Address (line 1)

Address (line 2)

Address (line 3)

Address (line 4)

FOR OFFICE USE ONLY

05/09/2001 GTON11 00000204 09774266
01 FC:481 40.00 OP

Public burden reporting for this collection of information is estimated to average approximately 30 minutes per Cover Sheet to be recorded, including time for reviewing the document and gathering the data needed to complete the Cover Sheet. Send comments regarding this burden estimate to the U.S. Patent and Trademark Office, Chief Information Officer, Washington, D.C. 20231 and to the Office of Information and Regulatory Affairs, Office of Management and Budget, Paperwork Reduction Project (0651-0027), Washington, D.C. 20503. See OMB Information Collection Budget Package 0651-0027, Patent and Trademark Assignment Practice. DO NOT SEND REQUESTS TO RECORD ASSIGNMENT DOCUMENTS TO THIS ADDRESS.

Mail documents to be recorded with required cover sheet(s) information to:
Commissioner of Patents and Trademarks, Box Assignments, Washington, D.C. 20231

FORM PTO-1619B
Expires 06/30/99
OMB 0651-0027

MAY 0 2 2001 PATENT & TRADEMARK OFFICE

Page 2

U.S. Department of Commerce
Patent and Trademark Office
PATENT

Correspondent Name and Address Area Code and Telephone Number (540) 428-1701

Name LUKE A. KILYK

Address (line 1) KILYK & BOWERSOX, P.L.L.C.

Address (line 2) 53A Lee Street

Address (line 3) Warrenton, VA 20186

Address (line 4)

Pages Enter the total number of pages of the attached conveyance document including any attachments. # 2

Application Number(s) or Patent Number(s) ( ) Mark if additional numbers attached

Enter either the Patent Application Number or the Patent Number (DO NOT ENTER BOTH numbers for the same property).

Patent Application Number(s)	Patent Number(s)
09/774,266	

If this document is being filed together with a new Patent Application, enter the date the patent application was signed by the first named executing inventor. Month Day Year

Patent Cooperation Treat (PCT)

Enter PCT application number only if a U.S. Application Number has not been assigned.

PCT	PCT	PCT
PCT	PCT	PCT

Number of Properties Enter the total number of properties involved. # 1

Fee Amount Fee Amount for Properties Listed (37 CFR 3.41): $ 40.00

Method of Payment: Enclosed (X) Deposit Account ( )

Deposit Account

(Enter for payment by deposit account or if additional fees can be charged to the account.)

Deposit Account Number: # 50-0925

Authorization to charge additional fees: Yes (X) No ( )

Statement and Signature

To the best of my knowledge and belief, the foregoing information is true and correct and any attached copy is a true copy of the original document. Charges to deposit account are authorized, as indicated herein.

Luke A. Kilyk, Reg. No. 33,251		May 3, 2001
Name of Person Signing	Signature	Date

Date: May 3, 2001 Label No. EL856659189US

I hereby certify that, on the date indicated above, I deposited this paper with identified attachments and/or fee with the U.S. Postal Service and that it was addressed for delivery to the Assistant Commissioner for Patents, Washington, DC 20231 by "Express Mail Post Office to Addressee" service.

Sandra Stocklinski Sandra Stocklinski

Name (Print) Signature

Form PTO -1619A
Expires 06/30/99
OMB 0651-0027

OIPE JC179 MAY 0 2 2001 PATENT & TRADEMARK OFFICE

05-11-2001

101713049

U.S. Department of Commerce
Patent and Trademark Office
PATENT

SHEET

TO: The Commissioner of Patents and Trademarks: Please record the attached original document(s) or copy(ies).

Submission Type

(X) New

( ) Resubmission (Non-Recordation) Document ID#

( ) Correction of PTO Error Reel # Frame #

( ) Corrective Document Reel # Frame #

Conveyance Type

(X) Assignment ( ) Security Agreement

( ) License ( ) Change of Name

( ) Merger ( ) Other

U.S. Government
(For Use ONLY by U.S. Government Agencies)

( ) Departmental File ( ) Secret File

Conveying Party(ies) ( )Mark if additional names of conveying parties attached

Name (line 1) Lotfi HEDHLI

Name (line 2)

Execution Date Month Day Year 2/12/01

Second Party

Name (line 1) Laurent BILLON

Name (line 2)

Execution Date Month Date Year 2/9/01

Receiving Party ( )Mark if additional names of receiving parties attached

Name (line 1) ATOFINA CHEMICALS, INC.

Name (line 2)

Address (line 1) 2000 Market Street

Address (line 2)

Address (line 3) Philadelphia, city PA / U.S.A. State/Country 19103-3222 Zip Code

( ) If document to be recorded is an assignment and the receiving party is not domiciled in the United States, an appointment of a domestic representative is attached. (*Designation must be a separate document from Assignment.*)

Domestic Representative Name and Address Enter for the first Receiving Party only.

Name

Address (line 1)

Address (line 2)

Address (line 3)

Address (line 4)

05/10/2001 GTON11 00000284 09774266

01 FC:581 40.00 OP

FOR OFFICE USE ONLY

Public burden reporting for this collection of information is estimated to average approximately 30 minutes per Cover Sheet to be recorded, including time for reviewing the document and gathering the data needed to complete the Cover Sheet. Send comments regarding this burden estimate to the U.S. Patent and Trademark Office, Chief Information Officer, Washington, D.C. 20231 and to the Office of Information and Regulatory Affairs, Office of Management and Budget, Paperwork Reduction Project (0651-0027), Washington, D.C. 20503. See OMB Information Collection Budget Package 0651-0027, Patent and Trademark Assignment Practice. DO NOT SEND REQUESTS TO RECORD ASSIGNMENT DOCUMENTS TO THIS ADDRESS.

Mail documents to be recorded with required cover sheet(s) information to:
Commissioner of Patents and Trademarks, Box Assignments, Washington, D.C. 20231

UNITED STATES PATENT AND TRADEMARK OFFICE

UNITED STATES DEPARTMENT OF COMMERCE
United States Patent and Trademark Office
Address: COMMISSIONER FOR PATENTS
P.O. Box 1450
Alexandria, Virginia 22313-1450
www.uspto.gov

APPL NO.	FILING OR 371 (c) DATE	ART UNIT	FIL FEE REC'D	ATTY.DOCKET NO	DRAWINGS	TOT CLMS	IND CLMS
10/670,099	09/22/2003	2171	918	694231.0118	16	17	5

CONFIRMATION NO. 6282

CORRECTED FILING RECEIPT

OC000000012059838

James J. DeCarlo
Stroock & Stroock & Lavan LLP
180 Maiden Lane
New York, NY 10038

Date Mailed: 03/09/2004

Receipt is acknowledged of this regular Patent Application. It will be considered in its order and you will be notified as to the results of the examination. Be sure to provide the U.S. APPLICATION NUMBER, FILING DATE, NAME OF APPLICANT, and TITLE OF INVENTION when inquiring about this application. Fees transmitted by check or draft are subject to collection. Please verify the accuracy of the data presented on this receipt. **If an error is noted on this Filing Receipt, please write to the Office of Initial Patent Examination's Filing Receipt Corrections, facsimile number 703-746-9195. Please provide a copy of this Filing Receipt with the changes noted thereon. If you received a "Notice to File Missing Parts" for this application, please submit any corrections to this Filing Receipt with your reply to the Notice. When the USPTO processes the reply to the Notice, the USPTO will generate another Filing Receipt incorporating the requested corrections (if appropriate).**

Applicant(s)

Andrew R. Volk, San Francisco, CA;

Domestic Priority data as claimed by applicant

This application is a CIP of 10/459,341 06/11/2003

Foreign Applications

If Required, Foreign Filing License Granted: 01/31/2004

Projected Publication Date: 12/16/2004

Non-Publication Request: No

Early Publication Request: No

Title

Method and apparatus for organizing and playing data

Preliminary Class

707

LICENSE FOR FOREIGN FILING UNDER
Title 35, United States Code, Section 184
Title 37, Code of Federal Regulations, 5.11 & 5.15

GRANTED

The applicant has been granted a license under 35 U.S.C. 184, if the phrase "IF REQUIRED, FOREIGN FILING LICENSE GRANTED" followed by a date appears on this form. Such licenses are issued in all applications where the conditions for issuance of a license have been met, regardless of whether or not a license may be required as set forth in 37 CFR 5.15. The scope and limitations of this license are set forth in 37 CFR 5.15(a) unless an earlier license has been issued under 37 CFR 5.15(b). The license is subject to revocation upon written notification. The date indicated is the effective date of the license, unless an earlier license of similar scope has been granted under 37 CFR 5.13 or 5.14.

This license is to be retained by the licensee and may be used at any time on or after the effective date thereof unless it is revoked. This license is automatically transferred to any related applications(s) filed under 37 CFR 1.53(d). This license is not retroactive.

The grant of a license does not in any way lessen the responsibility of a licensee for the security of the subject matter as imposed by any Government contract or the provisions of existing laws relating to espionage and the national security or the export of technical data. Licensees should apprise themselves of current regulations especially with respect to certain countries, of other agencies, particularly the Office of Defense Trade Controls, Department of State (with respect to Arms, Munitions and Implements of War (22 CFR 121-128)); the Office of Export Administration, Department of Commerce (15 CFR 370.10 (j)); the Office of Foreign Assets Control, Department of Treasury (31 CFR Parts 500+) and the Department of Energy.

NOT GRANTED

No license under 35 U.S.C. 184 has been granted at this time, if the phrase "IF REQUIRED, FOREIGN FILING LICENSE GRANTED" DOES NOT appear on this form. Applicant may still petition for a license under 37 CFR 5.12, if a license is desired before the expiration of 6 months from the filing date of the application. If 6 months has lapsed from the filing date of this application and the licensee has not received any indication of a secrecy order under 35 U.S.C. 181, the licensee may foreign file the application pursuant to 37 CFR 5.15(b).

UNITED STATES PATENT AND TRADEMARK OFFICE

UNITED STATES DEPARTMENT OF COMMERCE
United States Patent and Trademark Office
Address: COMMISSIONER FOR PATENTS
P.O. Box 1450
Alexandria, Virginia 22313-1450
www.uspto.gov

R. Neil Sudol
714 Colorado Avenue
Bridgeport, CT 06605-1601

Mail Date: 04/21/2010

Applicant	: Naomi L. Nakao	: DECISION ON REQUEST FOR
Patent Number	: 7588557	: RECALCULATION of PATENT
Issue Date	: 09/15/2009	: TERM ADJUSTMENT IN VIEW
Appliction No	: 10/670,106	: OF WYETH AND NOTICE OF INTENT TO
Filed	: 09/24/2003	: ISSUE CERTIFICATE OF CORRECTION
		:

The Request for Recalculation is **GRANTED** to the extent indicated.

The patent term adjustment has been determined to be **838** days. The USPTO will *sua sponte* issue a certificate of correction reflecting the amount of PTA days determined by the recalculation.

Prior to the issuance of the certificate of correction, the USPTO will afford patentee an opportunity to be heard and request reconsideration. Accordingly, patentee has **one month or thirty (30) days**, whichever is longer, to file a request for reconsideration of this patent term adjustment calculation. See 35 U.S.C. 154(b)(3)(B)(ii) and 37 CFR 1.322(a)(4). No extensions of time will be granted under 37 CFR 1.136.

Patentee should use document code PET.OP if electronically filing a request for reconsideration of this patent term adjustment calculation. The patentee must also include the information required by 37 CFR 1.705(b)(2) and the fee required by 37 CFR 1.18(e). If patentee does not file a timely request for reconsideration of this patent term adjustment calculation including the information required by 37 CFR 1.705(b)(2) and the fee required by 37 CFR 1.18(e), the USPTO will issue a certificate of correction reflecting the PTA determination noted above.

Patentee should be aware that in order to preserve the right to review in the United States District Court for the District of Columbia of the USPTO patent term adjustment determination, patentee must ensure that he or she also take the steps required under 35 U.S.C. 154(b)(4)(A) in a timely manner. Nothing in the request for recalculation should be construed as providing an alternative time frame for commencing a civil action under 35 U.S.C. 154(b)(4)(A).

Any questions concerning this decision should be directed to the Office of Patent Legal Administration at 571-272-7702.

UNITED STATES PATENT AND TRADEMARK OFFICE

COMMISSIONER FOR PATENTS
UNITED STATES PATENT AND TRADEMARK OFFICE
P.O. BOX 1450
ALEXANDRIA, VA 22313-1450
WWW.USPTO.GOV

Paper No.

RICHARD A. FAGIN
P.O. BOX 1247
RICHMOND TX 77406-1247

COPY MAILED

NOV 16 2007

OFFICE OF PETITIONS

In re Application of :
Turhan M. Taner :
Application No. 10/670,110 :
Patent No. 6,982,927 :
Filed: September 24, 2003 : DECISION ON PETITION
Issue Date: January 3, 2006 : UNDER 37 C.F.R. § 1.28(c)
Attorney Docket No. RSI-03-02 :
Title: METHOD FOR PROCESSING :
SEISMIC DATA TO IDENTIFY :
ANOMALOUS ABSORPTION ZONES :

This is a notice regarding your request for acceptance of a fee deficiency submission under 37 C.F.R. § 1.28. On September 1, 1998, the Court of Appeals for the Federal Circuit held that 37 C.F.R. §1.28(c) is the sole provision governing the time for correction of the erroneous payment of the issue fee as a small entity. See DH Technology v. Synergystex International, Inc. 154 F.3d 1333, 47 USPQ2d 1865 (Fed. Cir. Sept. 1, 1998).

The Office no longer investigates or rejects original or reissue applications under 37 C.F.R. § 1.56. 1098 Off. Gaz. Pat. Office 502 (January 3, 1989). Therefore, nothing in this notice is intended to imply that an investigation was done.

Your fee deficiency submission under 37 C.F.R. § 1.28 is hereby accepted. The petition is **GRANTED** accordingly.

Telephone inquiries regarding *this decision* should be directed to the undersigned at (571) 272-3225[1]. All other inquiries

1 Petitioner will note that all practice before the Office should be in writing, and the action of the Office will be based exclusively on the written record in the Office. See 37 C.F.R. § 1.2. As such, Petitioner is reminded that no telephone discussion may be controlling or considered authority for Petitioner's further action(s).

concerning examination procedures should be directed to the Technology Center.

Paul Shanoski
Senior Attorney
Office of Petitions
United States Patent and Trademark Office

UNITED STATES PATENT AND TRADEMARK OFFICE

UNITED STATES DEPARTMENT OF COMMERCE
United States Patent and Trademark Office
Address: COMMISSIONER FOR PATENTS
P.O. Box 1450
Alexandria, Virginia 22313-1450
www.uspto.gov

OCCHIUTI ROHLICEK & TSAO, LLP
10 FAWCETT STREET
CAMBRIDGE, MA 02138

Mail Date: 04/20/2010

Applicant	: Salim Yusuf	: DECISION ON REQUEST FOR
Patent Number	: 7595201	: RECALCULATION of PATENT
Issue Date	: 09/29/2009	: TERM ADJUSTMENT IN VIEW
Appliction No	: 10/670,118	: OF WYETH AND NOTICE OF INTENT TO
Filed	: 09/24/2003	: ISSUE CERTIFICATE OF CORRECTION
		:

The Request for Recalculation is **GRANTED** to the extent indicated.

The patent term adjustment has been determined to be **670** days. The USPTO will *sua sponte* issue a certificate of correction reflecting the amount of PTA days determined by the recalculation.

Prior to the issuance of the certificate of correction, the USPTO will afford patentee an opportunity to be heard and request reconsideration. Accordingly, patentee has **one month or thirty (30) days**, whichever is longer, to file a request for reconsideration of this patent term adjustment calculation. See 35 U.S.C. 154(b)(3)(B)(ii) and 37 CFR 1.322(a)(4). No extensions of time will be granted under 37 CFR 1.136.

Patentee should use document code PET.OP if electronically filing a request for reconsideration of this patent term adjustment calculation. The patentee must also include the information required by 37 CFR 1.705(b)(2) and the fee required by 37 CFR 1.18(e). If patentee does not file a timely request for reconsideration of this patent term adjustment calculation including the information required by 37 CFR 1.705(b)(2) and the fee required by 37 CFR 1.18(e), the USPTO will issue a certificate of correction reflecting the PTA determination noted above.

Patentee should be aware that in order to preserve the right to review in the United States District Court for the District of Columbia of the USPTO patent term adjustment determination, patentee must ensure that he or she also take the steps required under 35 U.S.C. 154(b)(4)(A) in a timely manner. Nothing in the request for recalculation should be construed as providing an alternative time frame for commencing a civil action under 35 U.S.C. 154(b)(4)(A).

Any questions concerning this decision should be directed to the Office of Patent Legal Administration at 571-272-7702.

UNITED STATES PATENT AND TRADEMARK OFFICE

UNITED STATES DEPARTMENT OF COMMERCE
United States Patent and Trademark Office
Address: COMMISSIONER FOR PATENTS
P.O. Box 1450
Alexandria, Virginia 22313-1450
www.uspto.gov

OCCHIUTI ROHLICEK & TSAO, LLP
10 FAWCETT STREET
CAMBRIDGE, MA 02138

Mail Date: 05/17/2010

Applicant : Salim Yusuf
Patent Number : 7595201
Issue Date : 09/29/2009
Application No : 10/670,118
Filed : 09/24/2003

: NOTICE CONCERNING IMPROPER
: CALCULATION OF PATENT TERM
: ADJUSTMENT BASED UPON USPTO
: IMPROPERLY MEASURING REDUCTION
: PERIOD UNDER 37 CFR 1.704(c)(10).

The United States Patent and Trademark Office (USPTO) discovered that in processing the recent recalculation decisions mailed in response to patentee's filed Request for Recalculation of Patent Term Adjustment in view of Wyeth, the USPTO improperly measured the reduction period for reductions under 37 CFR 1.704(c)(10). Pursuant to 37 CFR 1.704(c)(10), patentee's reduction begins on the date of filing the amendment under 37 CFR 1.312 ("1.312 amendment") or other related paper and ends on the date that the Office mails a response to the filing of the 1.312 amendment or other paper. It has been discovered that during the recalculation, the calculation failed to the limit the reduction to the mail date of the response to the 1.312 amendment or other paper. Accordingly, patentee's reductions were greater than warranted.

This notice **VACATES** the previous GRANTED request for recalculation and provides patentee with a revised GRANTED recalculation.

The patent term adjustment has been determined to be **763** days. The USPTO will *sua sponte* issue a certificate of correction reflecting the amount of patent term adjustment (PTA) days determined by the recalculation.

Prior to the issuance of the certificate of correction, the USPTO will afford patentee an opportunity to be heard and request reconsideration. Accordingly, patentee has **one month or thirty (30) days** from the mail date of this notice, whichever is longer, to file a request for reconsideration of this PTA calculation. See 35 U.S.C. § 154(b)(3)(B)(ii) and 37 CFR 1.322(a)(4).

Patentee should use document code PET.OP if electronically filing a request for reconsideration of this PTA calculation. The patentee must also include the information required by 37 CFR 1.705(b)(2), and the fee required by 37 CFR 1.18(e). If patentee does not file a timely request for reconsideration of this PTA calculation, including the information required by 37 CFR 1.705(b)(2) and the fee required by 37 CFR 1.18(e), the USPTO will issue a certificate of correction reflecting the PTA determination noted above.

Patentee should be aware that in order to preserve the right of review of the USPTO's PTA determination in the United States District Court for the District of Columbia, patentee must ensure that the steps required under 35 U.S.C. § 154 (b)(4) are taken in a timely manner. Nothing in the request for recalculation should be construed as providing an alternative time frame for commencing a civil action under 35 U.S.C. § 154(b)(4).

UNITED STATES PATENT AND TRADEMARK OFFICE

Commissioner for Patents
United States Patent and Trademark Office
P.O. Box 1450
Alexandria, VA 22313-1450
www.uspto.go

GREER, BURNS & CRAIN
300 S WACKER DRIVE
25TH FLOOR
CHICAGO, IL 60606

COPY MAILED

NOV 19 2004

OFFICE OF PETITIONS

In re Application of	:	
Kahng et al.	:	
Application No. 10/670,134	:	ON PETITION
Filed: September 24, 2003	:	
Attorney Docket No. 1201.68261	:	

This is a notice regarding your request for acceptance of a fee deficiency submission under 37 CFR 1.28. On September 1, 1998, the Court of Appeals for the Federal Circuit held that 37 CFR 1.28(c) is the sole provision governing the time for correction of the erroneous payment of the issue fee as a small entity. **See DH Technology v. Synergystex International, Inc. 154 F.3d 1333, 47 USPQ2d 1865 (Fed. Cir. Sept. 1, 1998).**

The Office no longer investigates or rejects original or reissue applications under 37 CFR 1.56. **1098 Off. Gaz. Pat. Office 502 (January 3, 1989).** Therefore, nothing in this Notice is intended to imply that an investigation was done.

Your fee deficiency submission under 37 CFR 1.28 is hereby **ACCEPTED**.

Inquiries related to this communication should be directed to the undersigned at (571) 272-3282.

Liana Chase
Petitions Examiner
Office of Petitions
Office of the Deputy Commissioner
for Patent Examination Policy

UNITED STATES PATENT AND TRADEMARK OFFICE

Commissioner for Patents
United States Patent and Trademark Office
P.O. Box 1450
Alexandria, VA 22313-1450
www.uspto.gov

JUAN JUAN
HARRINGTON & SMITH, PC
4 RESEARCH DRIVE
SHELTON CT 06484-6212

COPY MAILED
AUG 12 2008

In re Application of	:	
Esko Alanen et al.	:	
Application No. 10/670,144	:	ON PETITION
Filed: September 23, 2003	:	
Attorney Docket No. 881B.0006.U1	:	

This is a decision on the petition under the unintentional provisions of 37 CFR 1.137(b), filed January 28, 2008, to revive the above-identified application.

The petition is **GRANTED**.

The application became abandoned for failure to timely file a reply within the meaning of 37 CFR 1.113 to the final Office action of April 17, 2007. The proposed reply required for consideration of a petition to revive must be a Notice of Appeal (and appeal fee required by 37 CFR 41.20(b)(2), an amendment that *prima facie* places the application in condition for allowance, a Request for Continued Examination and submission (37 CFR 1.114), or the filing of a continuing application under 37 CFR 1.53(b). See MPEP 711.03(c)(III)(A)(2). A two (2) month extension of time pursuant to the provisions of 37 CFR 1.136(a) was obtained. Accordingly, the date of abandonment of this application is September 18, 2007.

The petition satisfies the requirements of 37 CFR 1.137(b) in that petitioner has supplied (1) the reply in the form of a Request for Continued Examination (RCE) and fee of $405.00, and the submission required by 37 CFR 1.114; (2) the petition fee of $770.00; and (3) a proper statement of unintentional delay.

Telephone inquiries concerning this decision should be directed to JoAnne Burke at (571) 272-4584.

This application is being referred to Technology Center AU 3736 for processing of the RCE and for appropriate action by the Examiner in the normal course of business on the amendment submitted in accordance with 37 CFR 1.114.

Irvin Dingle
Petitions Examiner
Office of Petitions

Application No: 10/670,144 Date: 8/5/08

CHECKLIST - PETITION TO REVIVE (UNINTENTIONAL) 37 CFR 1.137(b)

Petition under 37 CFR 1.137(b) requires:

1. Petition fee;
2. Reply and/or issue fee;
3. Terminal disclaimer with disclaimer fee - utility and plant filed before 6/8/95 and all design cases;
4. Statement that the entire delay was unintentional.

Petition Date: 1/28/08

Petition Fee: (✓) $770/SM ( ) $1540/LG ( ) Not Paid

Is statement of unintentional delay present? (✓)YES ( )NO (Can statement be construed as unintentional?)

Is petition signed by attorney of record? (✓)YES ( )NO Petition address the same as address in palm. (✓)YES ( )NO

Mail Date of Office Action: 4/17/2007

Type of Office Action: Final Office

Statutory Response Period Set: ( ) 30 days ( ) 1 month ( ) 2 months (✓) 3 months

Ext of time obtained w/in SSP: ( )None ( )1 month ( )2 months ( )3 months ( )4 months

Abandonment Date: July 18, 2007

Type of reply received: RCE

Terminal Disclaimer required: ( )YES (✓)NO (utility applications filed after 6/8/95 or before 5/29/00 and all design applications)

Petition Decision Codes

502

502 - 37 CFR 1.137(b) Revival based on unintentional delay in abandon application
510 - 37 CFR 1.137(b) Revival to accept late payment of issue fee (unintentional)

Fee Codes

1453/2453 *$1540/$770* *502/510 Petitions*

Paralegal: [signature] ( )Dismissed (✓)Granted

MAG:01/07

RAM Fee History Query

Revenue Accounting and Management

Name/Number: 10670144 Total Records Found: 7

Start Date: Any Date End Date: Any Date

Accounting Date	Sequence Num.	Fee Type	Fee Code	Fee Amount	Mailroom Date	Payment Method
01/29/2008	00000009	1	2453	$770.00	01/28/2008	CK
01/29/2008	00000010	1	2801	$405.00	01/28/2008	CK
09/20/2007	00000139	1	2252	$225.00	09/20/2007	CK
01/25/2007	00000008	1	2251	$60.00	01/25/2007	CK
05/20/2004	00000001	1	2051	$65.00	05/19/2004	CK
05/20/2004	00000031	1	8021	$40.00	05/19/2004	CK
10/01/2003	00000065	1	2001	$375.00	09/23/2003	CK

Correspondence Address for 10/670144

Customer Number	Contact Information	Address
29683 Delivery Mode: Paper	Telephone: (203).92-5.94 Fax: (203).94-4.02 E-Mail: PATENT@HSPATENT.COM	HARRINGTON & SMITH, PC 4 RESEARCH DRIVE SHELTON CT 06484-6212

Appln Info | Contents | Petition Info | Atty/Agent Info | Continuity/Reexam | Foreign D

Search Another: Application # Search **or Patent#** Search

PCT / / Search **or PG PUBS #** Search

Attorney Docket # Search

Bar Code # Search

To go back, right click here and select Back. To go forward, right click here and select Forward. To refresh, right click here and select Refresh.

Back to OASIS | Home page

OIPE IAP17
JAN 28 2008
PATENT & TRADEMARK OFFICE

DAC/CPW

PTO/SB/64 (01-08)
Approved for use through 01/31/2008. OMB 0651-0031
U.S. Patent and Trademark Office; U.S. DEPARTMENT OF COMMERCE
Under the Paperwork Reduction Act of 1995, no persons are required to respond to a collection of information unless it displays a valid OMB control number.

PETITION FOR REVIVAL OF AN APPLICATION FOR PATENT ABANDONED UNINTENTIONALLY UNDER 37 CFR 1.137(b)

Docket Number (Optional) 881B.0006.U1(US)

First named inventor: Alanen et al.

Application No.: 10/670,144 Art Unit: 3736

Filed: 9/23/2003 Examiner: Nguyen, Huong Q.

Title: Method for Measuring of Edema

Attention: Office of Petitions
Mail Stop Petition
Commissioner for Patents
P.O. Box 1450
Alexandria, VA 22313-1450
FAX (571) 273-8300

NOTE: If information or assistance is needed in completing this form, please contact Petitions Information at (571) 272-3282.

The above-identified application became abandoned for failure to file a timely and proper reply to a notice or action by the United States Patent and Trademark Office. The date of abandonment is the day after the expiration date of the period set for reply in the office notice or action plus an extensions of time actually obtained.

APPLICANT HEREBY PETITIONS FOR REVIVAL OF THIS APPLICATION

NOTE: A grantable petition requires the following items:
(1) Petition fee;
(2) Reply and/or issue fee;
(3) Terminal disclaimer with disclaimer fee - required for all utility and plant applications filed before June 8, 1995; and for all design applications; and
(4) Statement that the entire delay was unintentional.

1. Petition fee
☑ Small entity-fee $ 770.00 (37 CFR 1.17(m)). Applicant claims small entity status. See 37 CFR 1.27.

☐ Other than small entity – fee $ _____ (37 CFR 1.17(m))

2. Reply and/or fee
A. The reply and/or fee to the above-noted Office action in the form of an Amendment in response to the Office Action mailed 4/17/07 (identify type of reply):

☑ has been filed previously on 9/17/2007.
☐ is enclosed herewith.

01/29/2008 CNEGA1 00000007 10670144

B. The issue fee and publication fee (if applicable) of $ _____ 01 FC:2453 770.00 OP
☐ has been paid previously on _____.
☐ is enclosed herewith.

This collection of information is required by 37 CFR 1.137(b). The information is required to obtain or retain a benefit by the public which is to file (and by the USPTO to process) an application. Confidentiality is governed by 35 U.S.C. 122 and 37 CFR 1.11 and 1.14. This collection is estimated to take 1.0 hour to complete, including gathering, preparing, and submitting the completed application form to the USPTO. Time will vary depending upon the individual case. Any comments on the amount of time you require to complete this form and/or suggestions for reducing this burden, should be sent to the Chief Information Officer, U.S. Patent and Trademark Office, U.S. Department of Commerce, P.O. Box 1450, Alexandria, VA 22313-1450. DO NOT SEND FEES OR COMPLETED FORMS TO THIS ADDRESS. **SEND TO: Mail Stop Petition, Commissioner for Patents, P.O. Box 1450, Alexandria, VA 22313-1450.**

If you need assistance in completing the form, call 1-800-PTO-9199 and select option 2.

Under the Paperwork Reduction Act of 1995, no persons are required to respond to a collection of information unless it displays a valid OMB control number.

3. Terminal disclaimer with disclaimer fee

☑ Since this utility/plant application was filed on or after June 8, 1995, no terminal disclaimer is required.

☐ A terminal disclaimer (and disclaimer fee (37 CFR 1.20(d)) of $ _____ for a small entity or $ _____ for other than a small entity) disclaiming the required period of time is enclosed herewith (see PTO/SB/63).

4. STATEMENT: The entire delay in filing the required reply from the due date for the required reply until the filing of a grantable petition under 37 CFR 1.137(b) was unintentional. [NOTE: The United States Patent and Trademark Office may require additional information if there is a question as to whether either the abandonment or the delay in filing a petition under 37 CFR 1.137(b) was unintentional (MPEP 711.03(c), subsections (III)(C) and (D)).]

WARNING:

Petitioner/applicant is cautioned to avoid submitting personal information in documents filed in a patent application that may contribute to identity theft. Personal information such as social security numbers, bank account numbers, or credit card numbers (other than a check or credit card authorization form PTO-2038 submitted for payment purposes) is never required by the USPTO to support a petition or an application. If this type of personal information is included in documents submitted to the USPTO, petitioners/applicants should consider redacting such personal information from the documents before submitting them to the USPTO. Petitioner/applicant is advised that the record of a patent application is available to the public after publication of the application (unless a non-publication request in compliance with 37 CFR 1.213(a) is made in the application) or issuance of a patent. Furthermore, the record from an abandoned application may also be available to the public if the application is referenced in a published application or an issued patent (see 37 CFR 1.14). Checks and credit card authorization forms PTO-2038 submitted for payment purposes are not retained in the application file and therefore are not publicly available.

Signature	1/25/2008 Date
Juan Juan Typed or printed name	60,564 Registration Number, if applicable
Harrington & Smith, PC, 4 Research Drive Address	203-925-9400 Telephone Number
Shelton, CT 06484-6212 Address	

Enclosures: ☑ Fee Payment

☐ Reply

☐ Terminal Disclaimer Form

☐ Additional sheets containing statements establishing unintentional delay

☑ Other: Request for Continued Examination (RCE)

CERTIFICATE OF MAILING OR TRANSMISSION [37 CFR 1.8(a)]

I hereby certify that this correspondence is being:

☑ Deposited with the United States Postal Service on the date shown below with sufficient postage as first class mail in an envelope addressed to: Mail Stop Petition, Commissioner for Patents, P. O. Box 1450, Alexandria, VA 22313-1450.

☐ Transmitted by facsimile on the date shown below to the United States Patent and Trademark Office at (571) 273-8300.

1/25/2008 Date	Elaine F. Mian Signature
	Elaine F. Mian Typed or printed name of person signing certificate

UNITED STATES PATENT AND TRADEMARK OFFICE

Commissioner for Patents
United States Patent and Trademark Office
P.O. Box 1450
Alexandria, VA 22313-1450
www.uspto.gov

LAW OFFICE OF ALAN W. CANNON
942 MESA OAK COURT
SUNNYVALE, CA 94086

COPY MAILED

APR 16 2007

OFFICE OF PETITIONS

In re Application of :
Federico J. Benetti et al :
Application No. 10/670,152 : ON PETITION
Filed: September 24, 2003 :
Attorney Docket No. GUID-008CON2 :

This is a decision on the petition filed, November 27, 2006 under 37 CFR 1.137(b), to revive the above-identified application.

The petition is **GRANTED.**

The above-identified application became abandoned for failure to reply within the meaning of 37 CFR 1.113 in a timely manner to the final Office action mailed March 30, 2006, which set a shortened statutory period for reply of three (3) months. No extension of time under the provisions of 37 CFR 1.136(a) were obtained. Accordingly, the above-identified application became abandoned on July 1, 2006.

The above-identified application is being revived solely for purposes of continuity with a Request For Continued Examination (RCE) filed on November 27, 2006.

Telephone inquiries concerning this decision should be directed to Irvin Dingle at (571) 272-3210.

This matters is being referred to Technology Center AU 3733 for further processing.

Irvin Dingle
Petitions Examiner
Office of Petitions

UNITED STATES PATENT AND TRADEMARK OFFICE

Commissioner for Patents
United States Patent and Trademark Office
P.O. Box 1450
Alexandria, VA 22313-1450
www.uspto.gov

FISH & RICHARDSON P.C.
PO BOX 1022
MINNEAPOLIS MN 55440-1022

COPY MAILED

MAY 14 2007

OFFICE OF PETITIONS

In re Application of :

Mark C. Nicely et al. :
Application No. 10/670,153 : DECISION ON PETITION
Filed: September 23, 2003 : TO WITHDRAW
Attorney Docket No. 14522-004001 : FROM RECORD

This is a decision on the Request to Withdraw as attorney or agent of record under 37 C.F.R. § 1.36(b), filed October 27, 2006.

The request is **NOT APPROVED**.

A grantable request to withdraw as attorney/agent of record must be signed by every attorney/agent seeking to withdraw or contain a clear indication that one attorney is signing on behalf of another/others. A request to withdraw will not be approved unless at least 30 (thirty) days would remain between the date of approval and the later of the expiration date of a time to file a response or the expiration date of the maximum time period which can be extended under 37 C.F.R. § 1.136(a).

The request cannot be approved because no reasons for withdrawal have been provided. The Office cannot, at this time, determine whether practitioner's request is one of the mandatory or permissive reasons enumerated in 37 CFR 10.40. Any subsequent requests must include reasons for withdrawal. Please note that there is a space provided for on PTO/SB/83 (Request to Withdraw as Attorney or Agent) to supply practitioner's reasons.

All future communications from the Office will continue to be directed to the above-listed address until otherwise notified by applicant.

Telephone inquiries concerning this decision should be directed to Terri Williams at 571-272- 2991.

Terri Williams
Petitions Examiner
Office of Petitions

cc: **BEYER WEAVER LLP**
P.O. BOX 70250
OAKLAND, CA 94612-0250

UNITED STATES PATENT AND TRADEMARK OFFICE

DEC 20 2005

Commissioner for Patents
United States Patent and Trademark Office
P.O. Box 1450
Alexandria, VA 22313-1450
www.uspto.gov

BRINKS HOFER GILSON & LIONE
P.O. BOX 10395
CHICAGO, IL 60610

In re Application of
Fernando R. Moncho et al.
Application No. 10/670,159
Filed: September 23, 2003
For: SHELTER

DECISION ON PETITION TO WITHDRAW THE HOLDING OF ABANDONMENT

This is a decision on the Petition to Withdraw the Holding of Abandonment filed in the United States Patent and Trademark Office on June 16, 2005.

The petition is **GRANTED** in view of the following evidence of timely filing:

☐ Postcard receipt being dated _____.

☐ USPTO return facsimile receipt dated _____.

☐ Certificate of Mailing/Transmission signed on _____, and supported by a statement under 37 C.F.R. 1.8(b)(3).

☐ Hand Delivery Receipt of the specific documents submitted, dated _____.

☐ Certificate of Transmission of CPA under 37 C.F.R. 1.6 filed on _____.

☐ Express Mail Receipt under 37 C.F.R. 1.10 dated _____.

☒ Originally sent response, received September 24, 2004 with a Certificate of Mailing dated September 21, 2004.

This application is being forwarded to the Supervisory Legal Instruments Examiner for withdrawal of the abandonment and then to the examiner for prompt action.

KJD/bkg: 12/13/2005

KENNETH J. DORNER
SPECIAL PROGRAMS EXAMINER
TECHNOLOGY CENTER 3600

UNITED STATES PATENT AND TRADEMARK OFFICE

Commissioner for Patents
United States Patent and Trademark Office
P.O. Box 1450
Alexandria, VA 22313-1450
www.uspto.gov

MORGAN & FINNEGAN TRANSITION TEAM
C/O LOCKE LORD BISSELL & LIDDELL
3 WORLD FINANCIAL CENTER
NEW YORK NY 10281-2101

COPY MAILED

SEP 29 2009

OFFICE OF PETITIONS

In re Patent No. 7,501,118	:
Issued: March 10, 2009	: DECISION ON APPLICATION
Application No. 10/670,184	: FOR PATENT TERM ADJUSTMENT
Filed: September 24, 2003	:
Attorney Docket No. 2976-4039US3	:

This is a decision on the "PETITION FOR RECONSIDERATION OF PATENT TERM ADJUSTMENT UNDER 37 C.F.R. § 1.705(d)" filed May 8, 2009, requesting that the patent term adjustment determination for the above-identified patent be changed from six hundred eighty-three (683) days to one thousand two hundred three (1203) days.

The request for reconsideration of patent term adjustment is **DISMISSED**.

On March 10, 2009, the above-identified application matured into US Patent No. 7,501,118 with a patent term adjustment of 683 days. This request for reconsideration of patent term adjustment was timely filed within two months of the issue date of the patent. See 37 CFR 1.705(d).

The Office acknowledges submission of the $200.00 fee set forth in 37 CFR 1.18(e). No additional fees are required.

Patentees request recalculation of the patent term adjustment based on the decision in Wyeth v. Dudas, 580 F. Supp. 2d 138, 88 U.S.P.Q. 2d 1538 (D.D.C. 2008). Patentees assert that in view of the decision in Wyeth, they are "entitled to a total patent term adjustment of 1203 days, which includes 898 days of patent term adjustment due to exceeding three year pendency and 520 days due to USPTO delay in prosecution."

The 898-day period is calculated based on the application having been filed under 35 U.S.C. 111(a) on September 24, 2003, and the patent having been issued on March 10, 2009, three years and 898 days later. Patentees assert that in addition to this 898-day period, they are entitled to a period of adjustment due to examination delay pursuant to 37 CFR 1.702(a), of 520 days for the failure by the Office to mail at least one of a notification under 35 U.S.C. 132 not later than fourteen months after the date on which the application was filed under 35 U.S.C. 111(a), pursuant to 37 CFR 1.702(a)(1).

Under 37 CFR 1.703(f), patentees are entitled to a period of patent term adjustment equal to the period of delays based on the grounds set forth in 37 CFR 1.702 reduced by the period of time equal to the period of time during which patentees failed to engage in reasonable efforts to conclude prosecution pursuant to 37 CFR 1.704. In other words, it is the period of Office delay reduced by the period of applicant delay. Patentees do not dispute the period of reduction of 215 days for applicant delay.

Patentees do not dispute that the total period of Office delay is the sum of the period of Three Years Delay (898 days) and the period of Examination Delay (520 days) to the extent that these periods of delay are not overlapping. However, in effect, patentees contend that no portion of the Three Year Delay period overlaps with the period of 14-month examination delay. Accordingly, patentees submit that the total period of adjustment for Office delay is 1418 days, which is the sum of the period of Three Year Delay (898 days) and the period of Examination Delay (520 days), reduced by the period of overlap (0 days). As such, patentees assert entitlement to a patent term adjustment of 1203 days (898 + 520 reduced by 0 overlap – 215 (applicant delay)).

The Office agrees that as of the issuance of the patent on March 10, 2009, the application was pending three years and 898 days after its filing date. The Office agrees that the action detailed above was not taken within the specified time frame, and thus, the entry of a period of adjustment of 520 days is correct. At issue is whether patentees should accrue 898 days of patent term adjustment for the Office taking in excess of three years to issue the patent, as well as 520 days for Office failure to take a certain action within a specified time frame (or examination delay).

The Office contends that the period of 520 days examination delay overlaps with the period of 898 days of delay in issuance of the patent. Patentees' calculation of the period of overlap is inconsistent with the Office's interpretation of this provision. 35 U.S.C. 154(b)(2)(A) limits the adjustment of patent term, as follows:

> To the extent that the periods of delay attributable to grounds specified in paragraph (1) overlap, the period of any adjustment granted under this subsection shall not exceed the actual number of days the issuance of the patent was delayed.

Likewise, 35 CFR 1.703(f) provides that:

> To the extent that periods of delay attributable to the grounds specified in § 1.702 overlap, the period of adjustment granted under this section shall not exceed the actual number of days the issuance of the patent was delayed.

As explained in *Explanation of 37 CFR 1.703(f) and of the United States Patent and Trademark Office Interpretation of 35 U.S.C. 154(b)(2)(A)*, 69 Fed. Reg. 34283 (June 21, 2004), the Office interprets 35 U.S.C. 154(b)(2)(A) as permitting either patent term adjustment under 35 U.S.C. 154(b)(1)(A)(I)-(iv), or patent term adjustment under 35 U.S.C. 154(b)(1)(B), but not as permitting patent term adjustment under both 35 U.S.C. 154(b)(1)(A)(I)-(iv) and 154(b)(1)(B). Accordingly, the Office implements the overlap provision as follows:

> If an application is entitled to an adjustment under 35 U.S.C. 154(b)(1)(B), the entire period during which the application was pending (except for periods excluded under 35 U.S.C. 154(b)(1)(B)(I)-(iii)), and not just the period beginning three years after the actual filing date of the application, is the period of delay under 35 U.S.C. 154(b)(1)(B) in determining whether periods of delay overlap under 35 U.S.C. 154(b)(2)(A). Thus, any days of delay for Office issuance of the patent more than 3 years after the filing date of the application, which overlap with the days of patent term adjustment accorded prior to the issuance of the patent will not result in any additional patent term adjustment. See 35 U.S.C. 154(b)(1)(B), 35 U.S.C. 154(b)(2)(A), and 37 CFR § 1.703(f). See *Changes to Implement Patent Term Adjustment Under Twenty Year Term; Final Rule*, 65 Fed. Reg. 56366 (Sept. 18, 2000). See also *Revision of Patent Term Extension and Patent Term Adjustment Provisions; Final Rule*, 69 Fed. Reg. 21704 (April 22, 2004), 1282 Off. Gaz. Pat. Office 100 (May 18, 2004). See also *Explanation of 37 CFR 1.703(f) and of the United States Patent and Trademark Office Interpretation of 35 U.S.C. 154(b)(2)(A),* 69 Fed. Reg. 34283 (June 21, 2004).

The current wording of § 1.703(f) was revised in response to the misinterpretation of this provision by a number of Patentees. The rule was slightly revised to more closely track the corresponding language of 35 U.S.C. 154(b)(2)(A). The relevant portion differs only to the extent that the statute refers back to provisions of the statute whereas the rule refers back to sections of the rule. This was not a substantive change to the rule nor did it reflect a change of the Office's interpretation of 35 U.S.C. 154(b)(2)(A). As stated in the *Explanation of 37 CFR 1.703(f) and of the United States Patent and Trademark Office Interpretation of 35 U.S.C. 154(b)(2)(A)*, the Office has consistently taken the position that if an application is entitled to an adjustment under the three-year pendency provision of 35 U.S.C. 154(b)(1)(B), the entire period during which the application was pending before the Office (except for periods excluded under 35 U.S.C. 154(b)(1)(B)(i)-(iii)), and not just the period beginning three years after the actual filing date of the application, is the relevant period under 35 U.S.C. 154(b)(1)(B) in determining whether periods of delay "overlap" under 35 U.S.C. 154(b)(2)(A).

This interpretation is consistent with the statute. Taken together the statute and rule provide that to the extent that periods of delay attributable to grounds specified in 35 U.S.C. 154(b)(1) and in corresponding § 1.702 overlap, the period of adjustment

granted shall not exceed the actual number of days the issuance of the patent was delayed. The grounds specified in these sections cover the A) guarantee of prompt Patent and Trademark Office responses, B) guarantee of no more than 3-year application pendency, and C) guarantee or adjustments for delays due to interference, secrecy orders and appeals. A section by section analysis of 35 U.S.C. 154(b)(2)(A) specifically provides that:

> Section 4402 imposes limitations on restoration of term. In general, pursuant to [35 U.S.C.] 154(b)(2)(A)-(C), total adjustments granted for restorations under [35 U.S.C. 154](b)(1) are reduced as follows: (1) To the extent that there are multiple grounds for extending the term of a patent that may exist simultaneously (e.g., delay due to a secrecy order under [35 U.S.C.] 181 and administrative delay under [35 U.S.C.] 154(b)(1)(A)), the term should not be extended for each ground of delay but only for the actual number of days that the issuance of a patent was delayed; See 145 Cong. Rec. S14,718[1]

As such, the period for over three-year pendency does not overlap only to the extent that the actual dates in the period beginning three years after the date on which the application was filed overlap with the actual dates in the periods for failure of the Office to take action within specified time frames. In other words, consideration of the overlap does not begin three years after the filing date of the application

In this instance, the relevant period under 35 U.S.C. 154(b)(1)(B) in determining whether periods of delay "overlap" under 35 U.S.C. 154(b)(2)(A) is the entire period during which the application was pending before the Office, September 24, 2003, to the date the patent issued on March 10, 2009. Prior to the issuance of the patent, 520 days of patent term adjustment were accorded for the Office failing to respond within a specified time frame during the pendency of the application. The 520 days of examination delay overlaps with the 898 days of delay in issuing the patent. During that time, the issuance of the patent was delayed by 898 days, not 520 days and 898 days. The Office took 14 months and 520 days to issue a first Office action. Otherwise, the Office took all actions set forth in 37 CFR 1.702(a) within the prescribed time frames. Nonetheless, given the 520 days of examination delay and the time allowed within the time frames for processing and examination, as of the date the patent issued, the application was pending three years and 898 days. The Office did not delay 520 days and also delay an additional 898 days. Accordingly, 898 days of patent term adjustment (not 520 and 898 days) was properly entered since the period of delay of

---

[1] The AIPA is title IV of the Intellectual Property and Communications Omnibus Reform Act of 1999 (S. 1948), which was incorporated and enacted as law as part of Pub. L. 106-113. The Conference Report for H.R. 3194, 106th Cong. 1st Sess. (1999), which resulted in Pub. L. 106-113, does not contain any discussion (other than the incorporated language) of S. 1948. A section-by-section analysis of S. 1948, however, was printed in the Congressional Record at the request of Senator Lott, See 145 Cong. Rec. S14,708-26 (1999)(daily ed. Nov. 17, 1999).

520 days of examination delay overlaps with the period of 898 days attributable to the delay in the issuance of the patent. Entry of both periods is not warranted. Thus, 898 days is determined to be the actual number of days that the issuance of the patent was delayed.

In view thereof, no adjustment to the patent term will be made.

Telephone inquiries specific to this decision should be directed to Senior Petitions Attorney Patricia Faison-Ball at (571) 272-3212.

Alesia Brown
Senior Petitions Attorney
Office of Petitions

UNITED STATES PATENT AND TRADEMARK OFFICE

Commissioner for Patents
United States Patent and Trademark Office
P.O. Box 1450
Alexandria, VA 22313-1450
www.uspto.gov

MORGAN & FINNEGAN TRANSITION TEAM
C/O LOCKE LORD BISSELL & LIDDELL
3 WORLD FINANCIAL CENTER
NEW YORK NY 10281-2101

COPY MAILED
MAR 16 2010

In re Patent No. 7,501,118	: DECISION ON REQUEST
Issued: March 10, 2009	: FOR RECONSIDERATION
Application No. 10/670,184	: OF PATENT TERM ADJUSTMENT
Filed: September 24, 2003	: AND
Attorney Docket No. 1004438.015US	: NOTICE OF INTENT TO ISSUE
(2976-4039US3)	: CERTIFICATE OF CORRECTION

This is a decision on the REQUEST FOR RECONSIDERATION OF THE DECISION ON APPLICATION FOR PATENT TERM ADJUSTMENT filed on November 30, 2009, requesting that the patent term adjustment be corrected from 683 to 1203 days. The Office is construing this request as a request under 1.181 to invoke supervisory authority of the Director and is filed within the two month time period pursuant to 37 CFR 1.181(f).

The petition to correct the patent term adjustment indicated on the above-identified patent to indicate that the term of the above-identified patent is adjusted by one thousand two hundred three (1203) days is **GRANTED**.

The application is being forwarded to the Certificates of Branch for issuance of a certificate of correction. The Office will issue a certificate of correction indicating that the term of the above-identified patent is extended or adjusted by **one thousand two hundred three (1203)** days.

Telephone inquiries specific to this decision should be directed to Senior Petitions Attorney Patricia Faison-Ball at (571) 272-3212.

/Kery A. Fries/

Kery A. Fries
Senior Legal Advisor
Office of Patent Legal Administration
Office of Associate Commissioner
for Examination Policy

Enclosure: Copy of DRAFT Certificate of Correction

DRAFT

UNITED STATES PATENT AND TRADEMARK OFFICE

CERTIFICATE OF CORRECTION

PATENT : 7,501,118 B2

DATED : March 10, 2009

INVENTOR(S) : Tim Keith

It is certified that error appears in the above-identified patent and that said Letters Patent is hereby corrected as shown below:

On the cover page,

[*] Notice: Subject to any disclaimer, the term of this patent is extended or adjusted under 35 USC 154(b) by (683) days

Delete the phrase "by 683 days" and insert – by 1203 days--

UNITED STATES PATENT AND TRADEMARK OFFICE

Commissioner for Patents
United States Patent and Trademark Office
P.O. Box 1450
Alexandria, VA 22313-1450
www.uspto.gov

WESTERMAN, HATTORI, DANIELS & ADRIAN, LLP
1250 CONNECTICUT AVENUE, NW
SUITE 700
WASHINGTON, DC 20036

COPY MAILED

JUL 2 2 2004

OFFICE OF PETITIONS

In re Application of :
Uehara, et al. :
Application No. 10/670,197 : ON PETITION
Filed: September 26, 2003 :
Attorney Docket No. 031196 :

This is a decision on the papers styled, "Response To Notice Of Omitted Items," filed Jule 18, 2004, which has been treated as a petition under 37 CFR 1.53, requesting that the above-identified application be accorded a filing date of September 26, 2003, including pages 31-46 of the specification (description and claims).

The application was filed on September 26, 2003. However, on June 4, 2004, the Office of Initial Patent Examination (OIPE) mailed a "Notice Of Omitted Items In A Nonprovisional Application" (Notice) that stated the application had been accorded a filing date, but pages 31-46 of the specification (description and claims) appear to have been omitted.

In response, on June 18, 2004, the instant petition and a copy of pages 31-46 of the specification (description and claims) were submitted. The papers were accompanied by a copy of applicant's postcard receipt that acknowledges receipt of fifty (50) pages of application on September 26, 2003. A review of the application file indicates the presence of thirty-four (34) pages of application (specification, claims and abstract). It is assumed that the sixteen (16) pages that contain pages 31-46 of the specification (description and claims) were misplaced by the Office.

In view of the above, the petition is granted.

The petition fee has not been charged.

This application will be returned to OIPE for further processing with a filing date of September 26, 2003, using the copy of pages 31-46 of the specification (description and claims), supplied on June 18, 2004.

Telephone inquiries concerning this matter may be directed to the undersigned at (703) 306-9200.

Edward J. Tannouse
Senior Petitions Attorney
Office of Petitions
United States Patent and Trademark Office

UNITED STATES PATENT AND TRADEMARK OFFICE

COMMISSIONER FOR PATENTS
UNITED STATES PATENT AND TRADEMARK OFFICE
P.O. BOX 1450
ALEXANDRIA, VA 22313-1450
www.uspto.gov

MAILED

JUN 2 2004

Office of the Director
Group 3600

DONALD R. SCHOONOVER
4211 ROLLING HILLS DRIVE
NIXA, MO 65714-8771

In re application of
William D. Battenberg
Application No. 10/670,202
Filed: September 26, 2003
For: MOTORIZED ACCESS LADDER FOR ELEVATED AREAS

DECISION ON PETITION TO MAKE SPECIAL (APPLICANT'S AGE)

This is a decision on the petition submitted on January 27, 2004 under 37 CFR 1.102 (c) to make the above-identified application special under the accelerated examination procedure set forth in MPEP 708.02, Section IV: Applicant's Age.

The petition is **GRANTED**.

An application may be accorded special status upon the filing of a petition providing evidence showing that the applicant is at least 65 years old. Such a showing may be provided by evidence such as a birth certificate or a statement from the applicant.

The evidence submitted with the petition is a declaration signed by Mr. Battenberg indicating that he is at least 65 years of age.

The examiner is directed (1) to make an interference search for possible interfering applications, (2) to promptly examine this application out of turn, and (3) if any interfering application is discovered, to examine such application simultaneously and state in the first official letter of such application that it is being taken out of turn because of a possible interference.

Petitioner is advised that this application will continue to be special, throughout its entire prosecution and pendency, including interference or appeal, if any, only if petitioner makes a prompt ***bona fide*** effort, in response to each Office action, to place the application in condition for allowance, even if it is necessary to conduct an interview with the examiner to accomplish this purpose.

SUMMARY: Petition to Make Special **GRANTED**.

Kenneth Dorner
Special Programs Examiner
Technology Center 3600
(703) 308-0866

RAR/mjz: 3/30/04

SPE: R. Gulakowski

SPE RESPONSE FOR CERTIFICATE OF CORRECTION

Paper No.: _____

DATE : 4/19/07

TO SPE OF : ART UNIT 1712

SUBJECT : Request for Certificate of Correction for Appl. No.: 10/670,215 Patent No.: 7169334

Please respond to this request for a certificate of correction within 7 days.

Please review the requested changes/corrections as shown in the **COCIN** document(s) in the IFW application image. No new matter should be introduced, nor should the scope or meaning of the claims be changed.

Please complete the response (see below) and forward the completed response to scanning using document code **COCX**.

Lamonte M. Newsome
Certificates of Correction Branch
703-308-9390 ext. 112

Thank You For Your Assistance

The request for issuing the above-identified correction(s) is hereby:
Note your decision on the appropriate box.

- [x] **Approved** — All changes apply.
- [ ] **Approved in Part** — Specify below which changes do not apply.
- [ ] **Denied** — State the reasons for denial below.

Comments: _____

Randy Gulakowski
RANDY GULAKOWSKI
SUPERVISORY PATENT EXAMINER
TECHNOLOGY CENTER 1700

SPE — **Art Unit** 1712

UNITED STATES PATENT AND TRADEMARK OFFICE

Commissioner for Patents
United States Patent and Trademark Office
P.O. Box 1450
Alexandria, VA 22313-1450
www.uspto.gov

NIXON PEABODY LLP
401 9TH ST NW
SUITE 900
WASHINGTON DC 20004-2128

COPY MAILED

DEC 0 6 2005

OFFICE OF PETITIONS

In re Application of	:	
Hiroyuki Mori	:	
Application No. 10/670,224	:	DECISION ON PETITION
Filed: September 26, 2003	:	
Attorney Docket No. 030712-12	:	

This is a decision on the "PETITION IN RESPONSE TO NOTICE OF OMITTED ITEM", filed October 6, 2005, which is being treated as a petition under 37 C.F.R. § 1.53 to accord the above-identified application a filing date of September 26, 2003, with Figure 5 of the drawings as part of the original disclosure.

The petition is **GRANTED**.

Application papers in the above-identified application were filed on September 26, 2003. However, on August 9, 2005, the Initial Patent Examination Division mailed applicant a "Notice of Omitted Item(s) in a Nonprovisional Application". Applicant was notified that the application papers had been accorded a filing date; however, Figure 5 of the drawings appeared to have been omitted.

In response, applicants filed the instant petition. Accompanying the petition was a copy of Figure 5. Applicant maintains that the application as originally filed this drawing figure. In support thereof, applicant submitted a postcard receipt identifying this application, itemizing "Three (3) Sheet of Drawing (Figs. 1-5)" as enclosed, bearing a United States Patent and Trademark Office date-stamp of September 26, 2003, and lacking any notation of non-receipt of any item listed.

A postcard receipt which itemizes and properly identifies the items which are being filed serves as *prima facie* evidence of receipt in the Office of all items listed thereon on the date stamped thereon by the Office. See MPEP 503.

Given the basis for granting the petition, the $130 petition fee has been refunded to Deposit Account No. 19-2380.

The application is being forwarded to the Office of Initial Patent Examination (OIPE) for further processing with a filing date of September 26, 2003, using the application papers received in the Office on that date and Figure 5 of the drawings as resupplied on petition filed October 6, 2005.

Telephone inquiries related to this decision should be directed to the undersigned at 571-272-3207.

Cliff Congo
Petitions Attorney
Office of Petitions

UNITED STATES PATENT AND TRADEMARK OFFICE

Commissioner for Patents
United States Patent and Trademark Office
P.O. Box 1450
Alexandria, VA 22313-1450
www.uspto.gov

OBLON, SPIVAK, MCCLELLAND, MAIER & NEUSTADT
1940 DUKE STREET
ALEXANDRIA VA 22314

COPY MAILED

AUG 14 2005

OFFICE OF PETITIONS

In re Application of :
Eiju Komuro et al :
Application No. 10/670,234 :
Filed: September 26, 2003 :
Attorney Docket No. 243190US2 :

ON PETITION

This is a decision on the petition, filed August 12, 2005, under 37 CFR 1.313(c)(2) to withdraw the above-identified application from issue after payment of the issue fee.

The petition is **GRANTED.**

The above-identified application is withdrawn from issue for consideration of a submission under 37 CFR 1.114 (request for continued examination). See 37 CFR 1.313(c)(2).

Petitioner is advised that the issue fee paid on July 25, 2005 in the above-identified application cannot be refunded. If, however, the above-identified application is again allowed, petitioner may request that it be applied towards the issue fee required by the new Notice of Allowance.[1]

Telephone inquiries should be directed to the undersigned at (571) 272-3208.

The examiner of Technology Center AU 2817 will consider the request for continued examination under 37 CFR 1.114.

Karen Creasy
Petitions Examiner
Office of Petitions
Office of the Deputy Commissioner
for Patent Examination Policy

---

[1] The request to apply the issue fee to the new Notice may be satisfied by completing and returning the new Issue Fee Transmittal Form PTOL-85(b), which includes the following language thereon: "Commissioner for Patents is requested to apply the Issue Fee and Publication Fee (if any) or re-apply any previously paid issue fee to the application identified above." Petitioner is advised that, whether a fee is indicated as being due or not, the Issue Fee Transmittal Form **must** be completed and timely submitted to avoid abandonment. Note the language in bold text on the first page of the Notice of Allowance and Fee(s) Due (PTOL-85).

UNITED STATES PATENT AND TRADEMARK OFFICE

COMMISSIONER FOR PATENTS
UNITED STATES PATENT AND TRADEMARK OFFICE
P.O. BOX 1450
ALEXANDRIA, VA 22313-1450
www.uspto.gov

MAILED

JUL 14 2004

DIRECTOR'S OFFICE
TECHNOLOGY CENTER 3600

Jerome D. Jackson (Jackson Patent Law Office)
211 N. Union Street, Suite 100
Alexandria, VA 22314

In re application of
Ken R. Powell
Application No. 10/670,297
Filed: September 26, 2003
For: SYSTEM AND METHOD FOR DISTRIBUTING COUPONS THROUGH A SYSTEM OF COMPUTER NETWORKS

DECISION ON PETITION TO MAKE SPECIAL (INFRINGEMENT)

This is a decision on the petition under 37 C.F.R § 1.102(d) filed February 23, 2004 to make the above-identified application special. The petition requests that the above-identified application be made special under the procedure set forth in M.P.E.P. § 708.02, item II: Infringement.

MPEP 708.02 states that a Petition to Make Special based on Infringement must have the following: (1) the appropriate petition fee under 37 CFR 1.17(i); (2) a statement by the assignee, applicant, or attorney alleging: (A) that there is an infringing device or product actually on the market or method in use; (B) that a rigid comparison of the alleged infringing device, product or method with the claims of the application has been made, and that, in his or her opinion, some of the claims are unquestionably infringed; and (C) that he or she has made a careful and thorough search of the prior art, or has good knowledge of the prior art, and has sent a copy of the references deemed most closely related to the subject matter encompassed by the claims.

The petition filed December 29, 2003 lacks requirement 2(C) above. In view of this deficiency, the petition is **DISMISSED**.

The applicant, assignee or attorney in addition to stating that a careful search of the prior art has been made, or having good knowledge of the prior art, **must** submit the **most closely** related pieces of prior art. Since "most closely related" is the **best** of the art found, a submission of art is always required, even if the applicant feels that it is not all that related to the invention. Applicant's statement that the known references most closely related are already of record having been cited or submitted to the USPTO in prior applications does not meet the requirement of having sent a copy of the references deemed most closely related to the subject matter encompassed by the claims since it is not clear exactly which references and which applications applicant is referring to.

Any request for reconsideration must be filed within TWO MONTHS of the date of this decision. Extensions of time under 37 CFR 1.136(a) are permitted. Should petitioner desire reconsideration, he should supplement this petition by a declaration or statement giving the information as outlined above.

Applicant should promptly submit a renewed petition to the Commissioner of Patents and Trademarks, Washington, D.C. 20231. The envelope should indicate that the correspondence be brought to the attention of Technology Center 3600.

Until the renewed petition is submitted, the application will be returned to the examiner's docket to await treatment on the merits in the normal order of examination.

SUMMARY: Petition to Make Special **DISMISSED**.

Steven N. Meyers
Special Programs Examiner
Technology Center 3600
(703) 308-3868

SNM/vdb: 7/8/04

UNITED STATES PATENT AND TRADEMARK OFFICE

COMMISSIONER FOR PATENTS
UNITED STATES PATENT AND TRADEMARK OFFICE
WASHINGTON, D.C. 20231
www.uspto.gov

APPLICATION NUMBER	FILING/RECEIPT DATE	FIRST NAMED APPLICANT	ATTORNEY DOCKET NUMBER
10/670,308	09/26/2003	Jean-Pierre Lefebvre	15482-1US-2 PM/mm

CONFIRMATION NO.

5346

OGILVY RENAULT
1981 MCGILL COLLEGE AVENUE
SUITE 1600
MONTREAL QC H3A2Y-3 CA CANADA

Date Mailed: February 25, 2005

Decision Dismissing Petition under 37 CFR 1.138(c)

The declaration of express abandonment will not be recognized

This is in response to the petition under 37 CFR 1.138(c) filed on February 10, 2005, for express abandonment to avoid publication of the above-identified application.

The petition is dismissed.

The express abandonment will **not** be recognized for the reason(s) indicated below:

1. ☐ The petition under 37 CFR 1.138(c) was not filed in sufficient time to permit the appropriate officials to recognize the abandonment and remove the application from the publication process.

2. ☐ The petition was not signed by a party authorized by 37 CFR 1.33(b)(1), (3) or (4).

3. ■ The Application was published on July 22, 2004, in compliance with 35 U.S.C. 122(b), the publication number is US20040141285A1, and it is available on the USPTO web site at http://www.uspto.gov/patft/index.html.

The application **has/will be published** as scheduled.

Telephone inquiries should be directed Office of Patent Publication, PGPub Division, 703-605-4283.

Barbara J. Debnam
Office of Patent Publication,
Pre-Grant Publication Division

Rev. 10/01

UNITED STATES PATENT AND TRADEMARK OFFICE

COMMISSIONER FOR PATENTS
UNITED STATES PATENT AND TRADEMARK OFFICE
P.O. BOX 1450
ALEXANDRIA, VA 22313-1450
www.uspto.gov

JJGJR.: 11-04

Paper No: __

COPY MAILED

NOV 24 2004

OFFICE OF PETITIONS

OLIFF & BERRIDGE, PLC
P.O. BOX 19928
ALEXANDRIA VA 22320

In re Application of
Suzuki, et al. :
Application No. 10/670,337 : DECISION ON PETITION
Filing Date: 26 September, 2003
Attorney Docket No. 117330 :

This is a decision correcting typographical error in the first paragraph of decision mailed on 23 November, 2004, responding to the petition filed on 24 February, 2004, and considered under 37 C.F.R. §1.53, to obtain a filing date of 26 May, 2003, for Page 18 of the specification (description and claims) of the application.

The petition is **GRANTED**, and to correct the prior typographical error the 23 November, 2004, decision is **vacated** and corrected in the following respects:

BACKGROUND

This nonprovisional application was deposited on 26 September, 2003.

On 24 December, 2003, the Office mailed a "Notice of Incomplete Nonprovisional Application," (the 24 December Notice) and indicated, *inter alia*, that "Page(s) 18 of the specification (description and claims)" appeared to be missing on deposit of the application.

The 24 December Notice further informed Petitioner that, should he contend that the missing page was deposited with the rest of the application at the time of filing, he could petition and make a showing to that effect, or he could accept the application as filed, or could submit the missing figure and accept the date of that submission as the date of filing.

The petition filed on 24 February, 2004, states that it is accompanied, *inter alia*, by a date-stamped ("09/26/03") receipt card itemizing the contents of the application received by the

Office and a copy of Page 8 of the specification (description and claims).

ANALYSIS

A review of the record reveals that:

- the instant application was deposited with the Office on 26 September, 2003; and
- the receipt card (see: MPEP §503[1]) is date stamped and provides, *inter alia*:

* * *

> Applnt' & ck 14749 $750, Prelim, 27 pp spec/claims (8)/abst., 7 sheets drwgs (Figs 1 - 8)

* * *

Because the return postcard receipt properly itemizes the contents of the application package in

---

[1] MPEP §503 provides in pertinent part:

§503 Application Number and Filing Receipt

* * *

A return postcard should be attached to *each* patent application for which a receipt is desired. It is important that the return postcard itemize all of the components of the application. If the postcard does not itemize each of the components of the application, it will not serve as evidence that any component which was not itemized was received by the United States Patent and Trademark Office (USPTO). It should be recognized that the identification of an application by application number does not necessarily signify that the USPTO has accepted the application as complete (37 C.F.R. §1.53(a)).

* * *

RETURN POSTCARD

If a receipt of any item (e.g., paper or fee) filed in the USPTO is desired, it may be obtained by enclosing with the paper a self-addressed postcard specifically identifying the item. The USPTO will stamp the receipt date on the postcard and place it in the outgoing mail. A postcard receipt which itemizes and properly identifies the items which are being filed serves as *prima facie* evidence of receipt in the USPTO of all the items listed thereon on the date stamped thereon by the USPTO.

The identifying data on the postcard should be so complete as to clearly identify the item for which receipt is requested. For example, the postcard should identify the applicant's name, application number (if known), confirmation number (if known), filing date, interference number, title of the invention, etc. The postcard should also identify the type of paper being filed, e.g., new application, affidavit, amendment, notice of appeal, appeal brief, drawings, fees, motions, supplemental oath or declaration, petition, etc., and the number of pages being submitted. If a new application is being filed, all parts of the application being submitted should be separately listed on the postcard, e.g., the number of pages of specification (including written description, claims and abstract), number of claims, number of sheets of drawings, number of pages of oath/declaration, number of pages of cover sheet (provisional application).

The postcard receipt will not serve as *prima facie* evidence of receipt of any item which is not adequately itemized on the postcard. For example, merely listing on the postcard "a complete application" or "patent application" will not serve as a proper receipt for each of the required components of an application (e.g., specification (including claims), drawings (if necessary), oath or declaration and the application filing fee) or missing portions (e.g., pages, sheets of drawings) of an application if one of the components or portion of a component is found to be missing by the USPTO. Each separate component should be specifically and properly itemized on the postcard. Furthermore, merely incorporating by reference in the postcard receipt, the items listed in a transmittal letter will not serve as *prima facie* evidence of receipt of those items.

The person receiving the item(s) in the USPTO will check the listing on the postcard against the item(s) being filed to be sure they are properly identified and that all the items listed on the postcard are presently being submitted to the USPTO. If any of the items listed on the postcard are not being submitted to the USPTO, those items will be crossed off and the post-card initialed by the person receiving the items. Upon return of a postcard receipt from the USPTO, the postcard receipt should be promptly reviewed by the person who filed the items to ensure that every item specifically denoted on the postcard was received by the USPTO. If the postcard receipt has been annotated to indicate that a particular item denoted on the postcard was not received by the USPTO, the postcard receipt will not serve as *prima facie* evidence of receipt of that item in the USPTO. (Emphasis supplied.)

accordance with MPEP §503, the Office concludes that the Figure(s) 19 and 20 as described in the specification were submitted on 26 May, 2003, and subsequently was misplaced in the Office.

Accordingly, the petition under 37 C.F.R. §1.53 is **granted**; the petition fee is waived and refunded via Treasury check; and the Notice mailed on 26 July, 2004, hereby is withdrawn as to Page 18 of the specification (description and claims).

This application is released to the Office of Initial Patent Examination for further processing with a filing date of 26 May, 2003, for the entire application and in particular for Figure(s) 19 and 20 as described in the specification using:

- pages 1 - 17, 19 - 27 (Specification, Claims, Abstract), and 7 sheets of drawings (Fig(s). 1 - 8) deposited on 26 September, 2003; and
- Page 18 of the specification (description and claims), deposited on 24 February, 2004;
- with direction to OIPE to correct Office records to reflect that 27 pages of specification (description, claims and abstract) and 7 sheets of drawings were present on filing on 26 September, 2003, and forward to Petitioner a corrected filing receipt setting forth a filing date of 26 September, 2003, reflecting therein that 27 pages of specification (description, claims and abstract) and 7 sheets of drawings were present on filing.

Thereafter, the application will be considered by the examiner in due course.

Telephone inquiries concerning this decision may be directed to the undersigned at (571) 272-3214.

John J. Gillon, Jr.
Senior Attorney
Office of Petitions

UNITED STATES PATENT AND TRADEMARK OFFICE

Commissioner for Patents
United States Patent and Trademark Office
P.O. Box 1450
Alexandria, VA 22313-1450
www.uspto.gov

JJGJR.: 11-04

Paper No: __

OLIFF & BERRIDGE, PLC
P.O. BOX 19928
ALEXANDRIA VA 22320

COPY MAILED

NOV 2 9 2004

OFFICE OF PETITIONS

In re Application of
Suzuki, et al. :
Application No. 10/670,337 : DECISION ON PETITION
Filing Date: 26 September, 2003
Attorney Docket No. 117330 :

This is a decision correcting typographical error as to the direction to OIPE in the decision mailed on 24 November, 2004, responding to the petition filed on 24 February, 2004, and considered under 37 C.F.R. §1.53, to obtain a filing date of 26 September, 2003, for Page 18 of the specification (description and claims) of the application.

The petition is **GRANTED**, and to correct the prior typographical error the 24 November, 2004, decision is **vacated** and corrected in the following respects:

BACKGROUND

This nonprovisional application was deposited on 26 September, 2003.

On 24 December, 2003, the Office mailed a "Notice of Incomplete Nonprovisional Application," (the 24 December Notice) and indicated, *inter alia*, that "Page(s) 18 of the specification (description and claims)" appeared to be missing on deposit of the application.

The 24 December Notice further informed Petitioner that, should he contend that the missing page was deposited with the rest of the application at the time of filing, he could petition and make a showing to that effect, or he could accept the application as filed, or could submit the missing figure and accept the date of that submission as the date of filing.

The petition filed on 24 February, 2004, states that it is accompanied, *inter alia*, by a date-

stamped ("09/26/03") receipt card itemizing the contents of the application received by the Office and a copy of Page 8 of the specification (description and claims).

ANALYSIS

A review of the record reveals that:

- the instant application was deposited with the Office on 26 September, 2003; and
- the receipt card (see: MPEP §503[1]) is date stamped and provides, *inter alia*:

* * *

> Applnt' & ck 14749 $750, Prelim, 27 pp spec/claims (8)/abst., 7 sheets drwgs (Figs 1 - 8)

* * *

---

[1] MPEP §503 provides in pertinent part:

§503 Application Number and Filing Receipt

* * *

A return postcard should be attached to *each* patent application for which a receipt is desired. It is important that the return postcard itemize all of the components of the application. If the postcard does not itemize each of the components of the application, it will not serve as evidence that any component which was not itemized was received by the United States Patent and Trademark Office (USPTO). It should be recognized that the identification of an application by application number does not necessarily signify that the USPTO has accepted the application as complete (37 C.F.R. §1.53(a)).

* * *

RETURN POSTCARD

If a receipt of any item (e.g., paper or fee) filed in the USPTO is desired, it may be obtained by enclosing with the paper a self-addressed postcard specifically identifying the item. The USPTO will stamp the receipt date on the postcard and place it in the outgoing mail. A postcard receipt which itemizes and properly identifies the items which are being filed serves as *prima facie* evidence of receipt in the USPTO of all the items listed thereon on the date stamped thereon by the USPTO.

The identifying data on the postcard should be so complete as to clearly identify the item for which receipt is requested. For example, the postcard should identify the applicant's name, application number (if known), confirmation number (if known), filing date, interference number, title of the invention, etc. The postcard should also identify the type of paper being filed, e.g., new application, affidavit, amendment, notice of appeal, appeal brief, drawings, fees, motions, supplemental oath or declaration, petition, etc., and the number of pages being submitted. If a new application is being filed, all parts of the application being submitted should be separately listed on the postcard, e.g., the number of pages of specification (including written description, claims and abstract), number of claims, number of sheets of drawings, number of pages of oath/declaration, number of pages of cover sheet (provisional application).

The postcard receipt will not serve as *prima facie* evidence of receipt of any item which is not adequately itemized on the postcard. For example, merely listing on the postcard "a complete application" or "patent application" will not serve as a proper receipt for each of the required components of an application (e.g., specification (including claims), drawings (if necessary), oath or declaration and the application filing fee) or missing portions (e.g., pages, sheets of drawings) of an application if one of the components or portion of a component is found to be missing by the USPTO. Each separate component should be specifically and properly itemized on the postcard. Furthermore, merely incorporating by reference in the postcard receipt, the items listed in a transmittal letter will not serve as *prima facie* evidence of receipt of those items.

The person receiving the item(s) in the USPTO will check the listing on the postcard against the item(s) being filed to be sure they are properly identified and that all the items listed on the postcard are presently being submitted to the USPTO. If any of the items listed on the postcard are not being submitted to the USPTO, those items will be crossed off and the post-card initialed by the person receiving the items. Upon return of a postcard receipt from the USPTO, the postcard receipt should be promptly reviewed by the person who filed the items to ensure that every item specifically denoted on the postcard was received by the USPTO. If the postcard receipt has been annotated to indicate that a particular item denoted on the postcard was not received by the USPTO, the postcard receipt will not serve as *prima facie* evidence of receipt of that item in the USPTO. (Emphasis supplied.)

Because the return postcard receipt properly itemizes the contents of the application package in accordance with MPEP §503, the Office concludes that the Figure(s) 19 and 20 as described in the specification were submitted on 26 September, 2003, and subsequently was misplaced in the Office.

Accordingly, the petition under 37 C.F.R. §1.53 is **granted**; the petition fee is waived and refunded via Treasury check; and the Notice mailed on 26 July, 2004, hereby is withdrawn as to Page 18 of the specification (description and claims).

This application is released to the Office of Initial Patent Examination for further processing with a filing date of 26 September, 2003, for the entire application and in particular for Figure(s) 19 and 20 as described in the specification using:

- pages 1 - 17, 19 - 27 (Specification, Claims, Abstract), and 7 sheets of drawings (Fig(s). 1 - 8) deposited on 26 September, 2003; and
- Page 18 of the specification (description and claims), deposited on 24 February, 2004;
- with direction to OIPE to correct Office records to reflect that 27 pages of specification (description, claims and abstract) and 7 sheets of drawings were present on filing on 26 September, 2003, and forward to Petitioner a corrected filing receipt setting forth a filing date of 26 September, 2003, reflecting therein that 27 pages of specification (description, claims and abstract) and 7 sheets of drawings were present on filing.

Thereafter, the application will be considered by the examiner in due course.

Telephone inquiries concerning this decision may be directed to the undersigned at (571) 272-3214.

John J. Gillon, Jr.
Senior Attorney
Office of Petitions

UNITED STATES PATENT AND TRADEMARK OFFICE

COMMISSIONER FOR PATENTS
UNITED STATES PATENT AND TRADEMARK OFFICE
P.O. BOX 1450
ALEXANDRIA, VA 22313-1450
www.uspto.gov

JJGJR.: 11-04

Paper No: __

OLIFF & BERRIDGE, PLC
P.O. BOX 19928
ALEXANDRIA VA 22320

COPY MAILED
NOV 2 3 2004
OFFICE OF PETITIONS

In re Application of
Suzuki, et al. :
Application No. 10/670,337 : DECISION ON PETITION
Filing Date: 26 September, 2003
Attorney Docket No. 117330 :

This is a decision on the petition filed on 24 February, 2004, and considered under 37 C.F.R. §1.53, to obtain a filing date of 27 May, 2004, for Page 18 of the specification (description and claims) of the application.

The Office regrets the delay in addressing this matter. The petition was received by the Office of Petitions at this writing.

The petition is **GRANTED**.

BACKGROUND

This nonprovisional application was deposited on 26 September, 2003.

On 24 December, 2003, the Office mailed a "Notice of Incomplete Nonprovisional Application," (the 24 December Notice) and indicated, *inter alia*, that "Page(s) 18 of the specification (description and claims)" appeared to be missing on deposit of the application.

The 24 December Notice further informed Petitioner that, should he contend that the missing page was deposited with the rest of the application at the time of filing, he could petition and make a showing to that effect, or he could accept the application as filed, or could submit the missing figure and accept the date of that submission as the date of filing.

The petition filed on 24 February, 2004, states that it is accompanied, *inter alia*, by a date-

stamped ("09/26/03") receipt card itemizing the contents of the application received by the Office and a copy of Page 8 of the specification (description and claims).

ANALYSIS

A review of the record reveals that:

- the instant application was deposited with the Office on 26 September, 2003; and
- the receipt card (see: MPEP §503[1]) is date stamped and provides, *inter alia*:

* * *

> Applnt' & ck 14749 $750, Prelim, 27 pp spec/claims (8)/abst., 7 sheets drwgs (Figs 1 - 8)

* * *

---

[1] MPEP §503 provides in pertinent part:

§503 Application Number and Filing Receipt

* * *

A return postcard should be attached to *each* patent application for which a receipt is desired. It is important that the return postcard itemize all of the components of the application. If the postcard does not itemize each of the components of the application, it will not serve as evidence that any component which was not itemized was received by the United States Patent and Trademark Office (USPTO). It should be recognized that the identification of an application by application number does not necessarily signify that the USPTO has accepted the application as complete (37 C.F.R. §1.53(a)).

* * *

RETURN POSTCARD

If a receipt of any item (e.g., paper or fee) filed in the USPTO is desired, it may be obtained by enclosing with the paper a self-addressed postcard specifically identifying the item. The USPTO will stamp the receipt date on the postcard and place it in the outgoing mail. A postcard receipt which itemizes and properly identifies the items which are being filed serves as *prima facie* evidence of receipt in the USPTO of all the items listed thereon on the date stamped thereon by the USPTO.

The identifying data on the postcard should be so complete as to clearly identify the item for which receipt is requested. For example, the postcard should identify the applicant's name, application number (if known), confirmation number (if known), filing date, interference number, title of the invention, etc. The postcard should also identify the type of paper being filed, e.g., new application, affidavit, amendment, notice of appeal, appeal brief, drawings, fees, motions, supplemental oath or declaration, petition, etc., and the number of pages being submitted. If a new application is being filed, all parts of the application being submitted should be separately listed on the postcard, e.g., the number of pages of specification (including written description, claims and abstract), number of claims, number of sheets of drawings, number of pages of oath/declaration, number of pages of cover sheet (provisional application).

The postcard receipt will not serve as *prima facie* evidence of receipt of any item which is not adequately itemized on the postcard. For example, merely listing on the postcard "a complete application" or "patent application" will not serve as a proper receipt for each of the required components of an application (e.g., specification (including claims), drawings (if necessary), oath or declaration and the application filing fee) or missing portions (e.g., pages, sheets of drawings) of an application if one of the components or portion of a component is found to be missing by the USPTO. Each separate component should be specifically and properly itemized on the postcard. Furthermore, merely incorporating by reference in the postcard receipt, the items listed in a transmittal letter will not serve as *prima facie* evidence of receipt of those items.

The person receiving the item(s) in the USPTO will check the listing on the postcard against the item(s) being filed to be sure they are properly identified and that all the items listed on the postcard are presently being submitted to the USPTO. If any of the items listed on the postcard are not being submitted to the USPTO, those items will be crossed off and the post-card initialed by the person receiving the items. Upon return of a postcard receipt from the USPTO, the postcard receipt should be promptly reviewed by the person who filed the items to ensure that every item specifically denoted on the postcard was received by the USPTO. If the postcard receipt has been annotated to indicate that a particular item denoted on the postcard was not received by the USPTO, the postcard receipt will not serve as *prima facie* evidence of receipt of that item in the USPTO. (Emphasis supplied.)

Because the return postcard receipt properly itemizes the contents of the application package in accordance with MPEP §503, the Office concludes that the Figure(s) 19 and 20 as described in the specification were submitted on 27 May, 2004, and subsequently was misplaced in the Office.

Accordingly, the petition under 37 C.F.R. §1.53 is **granted**; the petition fee is waived and refunded via Treasury check; and the Notice mailed on 26 July, 2004, hereby is withdrawn as to Page 18 of the specification (description and claims).

This application is released to the Office of Initial Patent Examination for further processing with a filing date of 27 May, 2004, for the entire application and in particular for Figure(s) 19 and 20 as described in the specification using:

- pages 1 - 17, 19 - 27 (Specification, Claims, Abstract), and 7 sheets of drawings (Fig(s). 1 - 8) deposited on 26 September, 2003; and
- Page 18 of the specification (description and claims), deposited on 24 February, 2004;
- with direction to OIPE to correct Office records to reflect that 27 pages of specification (description, claims and abstract) and 7 sheets of drawings were present on filing on 26 September, 2003, and forward to Petitioner a corrected filing receipt setting forth a filing date of 26 September, 2003, reflecting therein that 27 pages of specification (description, claims and abstract) and 7 sheets of drawings were present on filing.

Thereafter, the application will be considered by the examiner in due course.

Telephone inquiries concerning this decision may be directed to the undersigned at (571) 272-3214.

John J. Gillon, Jr.
Senior Attorney
Office of Petitions

UNITED STATES PATENT AND TRADEMARK OFFICE

COMMISSIONER FOR PATENTS
UNITED STATES PATENT AND TRADEMARK OFFICE
P.O. BOX 1450
ALEXANDRIA, VA 22313-1450
www.uspto.gov
DW 04-04

OBLON, SPIVAK, McCLELLAND
MAIER & NEUSTADT, P.C.
1940 DUKE STREET
ALEXANDRIA VA 22314

COPY MAILED

APR 0 2 2004

OFFICE OF PETITIONS

In re Application of :
Takeo Niwa :
Application No. 10/670,354 : ON PETITION
Filed: 26 September, 2003 :
Atty's Docket No. 241191US90CONT :

This is a decision on the petition filed on 5 February, 2004, requesting that the above-identified application be accorded a filing date of 26 September, 2003, with Pages 27-29 of the specification as a part of the original disclosure.

The petition is granted.

The application was filed on 26 September, 2003.

Accordingly, on 22 December, 2003, Initial Patent Examination Division mailed a Notice of Omitted Item(s) in a Provisional Application, stating that the application had been accorded a filing date of 26 September, 2003, but that Pages 27-29 of the specification (description and claims) appeared to have been omitted.

In response, on 5 February, 2004, the present petition and a copy of pages 27-29 of the specification and drawings were filed. Petitioner argues that Pages 27-29 were filed with the other application papers on 26 September, 2003, but were subsequently misplaced in the U.S. Patent and Trademark Office (Office). In support, a copy of petitioners' postcard receipt was supplied with the present petition. The postcard receipt shows an Office date stamp of 26 September, 2003, and identifies the application by inventor's name, docket number, and invention title, and acknowledges receipt of, *inter alia*, "33 pp. Specification." Petitioners request that the application, including Pages 27-29 of the specification, be accorded a filing date of 26 September, 2003.

A review of the record reveals that no Pages 27-29 of the specification has been located among the application papers received on 26 September, 2003. However, the evidence is convincing that the application papers deposited on 26 September, 2003, included Pages 27-29 of the specification (description and claims), which were subsequently misplaced in the Office. Therefore, the application, including Pages 27-29 of the specification, is entitled to a filing date of 26 September, 2003.

The "Notice" mailed on 22 December, 2003, is withdrawn.

In view of the above, the petition is granted. The petition fee of $130.00 is unnecessary and will be refunded to counsel's deposit account, No. 15-0030.

The application will be processed with the copy of Pages 27-29 of the specification supplied on 5 February, 2004, as a part of the original disclosure.

The application is being returned to Initial Patent Examination Division for further processing with a filing date of 26 September, 2003, using the application papers filed on that date, and the copy of Pages 27-29 of the specification supplied with the present petition.

Telephone inquires should be directed to the undersigned at 703-308-6918.

D Wood

Douglas I. Wood
Senior Petitions Attorney
Office of Petitions

UNITED STATES PATENT AND TRADEMARK OFFICE

Commissioner for Patents
United States Patent and Trademark Office
P.O. Box 1450
Alexandria, VA 22313-1450
www.uspto.gv

Rastar Corporation
Suite 310, MS 337
11230 Gold Express Drive
Gold River, CA 95670

COPY MAILED

FEB 08 2005

OFFICE OF PETITIONS

In re Application of	:	
Rodger H. Rast	:	DECISION ON PETITION
Application No. 10/670,432	:	
Filed: September 23, 2003	:	
Docket No. Display_RAST092303	:	

This is a decision on the petition under 37 CFR 1.137(a), filed December 17, 2004, which is being treated as a petition to withdraw the holding of abandonment.

The petition is **granted**.

This application became abandoned for failure to reply timely to the Notice to File Corrected Application Papers mailed on December 17, 2003, which set a two-month extendable period to reply. Accordingly, this application became abandoned on February 18, 2003. A Notice of Abandonment was mailed on November 10, 2004.

Petitioner stated that he did not receive the Notice to File Corrected Application Papers. Petitioner further stated that he reviewed his correspondence from the USPTO and did not locate the Notice. Petitioner asserted that the Notice did not indicate petitioner's complete correspondence address. Specifically, the address did not indicate the box number "MS 337."

A review of the record shows that petitioner identified customer number 26994 on the original transmittal sheet as the address of record at the time of filing, as well as Rastar Corporation, Suite 310, 11230 Gold Express Drive, Gold River, CA 95670, without MS 337.

The Office notes that as the Office will not recognize more than one correspondence address, any inconsistencies between the correspondences address resulting from a Customer Number being provided in an application for the correspondence address and any other correspondence address provided in that application will be resolved in favor of the Customer Number. MPEP 403.

The correspondence address associated with Customer No. 26994 is Rastar Corporation, Suite 310, MS 337, 11230 Gold Express Drive, Gold River, CA 95670. Due to the inconsistencies between the two correspondence addresses listed on the transmittal letter, the USPTO should have resolved the matter in favor of the Customer Number. Thus, it appears that the correspondence address listed on the Notice to File Corrected Application Paper was incomplete.

In view of the above, the **holding of abandonment is withdrawn** and the application is returned to pending status. The $250.00 petition fee submitted is unnecessary and, as such, is refundable. Petitioner may request a refund of the $250.00 petition fee by writing to the following address:

Mail Stop 16
Director of the US Patent and Trademark Office
PO Box 1450
Alexandria, VA 22313-1450

A copy of this decision should accompany petitioner's request.

This file is being forwarded to the Office of Initial Patent Examination for further processing.

Telephone inquiries should be directed to the undersigned at (571) 272-3211.

Christina Tartera Donnell

Christina Tartera Donnell
Petitions Attorney
Office of Petitions

UNITED STATES PATENT AND TRADEMARK OFFICE

Commissioner for Patents
United States Patent and Trademark Office
P.O. Box 1450
Alexandria, VA 22313-1450
www.uspto.gov

Paper No.

WONG, CABELLO, LUTSCH, RUTHERFORD & BRUCCULERI,
L.L.P.
20333 SH 249 6th Floor
HOUSTON TX 77070

COPY MAILED

JUL 07 2009

OFFICE OF PETITIONS

In re Application of	:	
Biby et al.	:	
Application No. 10/670,486	:	ON APPLICATION FOR
Filed: September 25, 2003	:	PATENT TERM ADJUSTMENT
Atty Docket No. 199-0018US-D	:	
Title: SYSTEM AND METHOD	:	
OF MONITORING VIDEO AND/OR	:	
AUDIO CONFERENCING THROUGH A	:	
RAPID-UPDATE WEBSITE	:	

This is in response to the "REQUEST FOR RECONSIDERATION OF PATENT TERM ADJUSTMENT," filed May 26, 2009. Applicant requests that the determination of patent term adjustment be increased by four hundred seventy-eight (478) days to one thousand, five hundred thirty-one (1531) days. Applicant requests this correction on the basis that the Office will take in excess of three years to issue this patent and in light of the recent court decision in Wyeth v. Dudas, 580 F. Supp. 2d 138, 88 U.S.P.Q. 2d 1538 (D.D.C. 2008).

As the instant application for patent term adjustment requests reconsideration of the patent term adjustment as it relates to the Office's failure to issue the patent within 3 years of the filing date, a decision is being **held in abeyance** until after the actual patent date. Knowledge of the actual date the patent issues is required to calculate the amount, if any, of additional patent term patentee is entitled to for Office failure to issue the patent within 3 years. See § 1.703(b).

Applicant is given **TWO (2) MONTHS** from the issue date of the patent to file a written request for reconsideration of the patent term adjustment for Office failure to issue the patent

within 3 years. A copy of this decision should accompany the request. Applicant may seek such consideration without payment of an additional fee. However, as to all other bases for seeking reconsideration of the patent term adjustment indicated in the patent, all requirements of § 1.705(d) must be met. Requests for reconsideration on other bases must be timely filed and must include payment of the required fee.

Rather than file the request for reconsideration of Patent Term Adjustment at the time of the mailing of the notice of allowance, applicant is advised that they may wait until the time of the issuance of the patent and file a request for reconsideration of the patent term pursuant to 37 CFR 1.705(d). The USPTO notes that it does not calculate the amount of time earned pursuant to 37 CFR 1.702(b) until the time of the issuance of the patent and accordingly, the Office will consider any request for reconsideration of the patent term adjustment due to an error in the calculation of 37 CFR 1.702(b) to be timely if the request for reconsideration is filed within two months of the issuance of the patent.

The Office acknowledges submission of the $200.00 fee set forth in 37 CFR 1.18(e). No additional fees are required.

Applicants are reminded that any delays by the Office pursuant to 37 CFR 1.702(a)(4) and 1.702(b) and any applicant delays under 37 CFR 1.704(c)(10) will be calculated at the time of the issuance of the patent and applicants will be notified of the revised patent term adjustment to be indicated on the patent in the Issue Notification letter that is mailed to applicants approximately three weeks prior to issuance.

The Office of Data Management has been advised of this decision. This matter is being referred to the Office of Data Management for issuance of the patent.

Telephone inquiries regarding this decision should be directed to Senior Attorney Paul Shanoski at (571) 272-3225.

Nancy Johnson
Senior Petitions Attorney
Office of Petitions

UNITED STATES PATENT AND TRADEMARK OFFICE

COMMISSIONER FOR PATENTS
UNITED STATES PATENT AND TRADEMARK OFFICE
P.O. BOX 1450
ALEXANDRIA, VA 22313-1450
www.uspto.gov

Paper No.

WONG, CABELLO, LUTSCH,
RUTHERFORD & BRUCCULERI, L.L.P.
20333 SH 249 6th Floor
HOUSTON TX 77070

MAILED

MAY 17 2010

OFFICE OF PETITIONS

In re Patent No. 7,574,472	:	DECISION ON REQUEST
Biby et al.	:	FOR
Issue Date: August 11, 2009	:	RECONSIDERATION OF
Application No. 10/670,486	:	PATENT TERM ADJUSTMENT
Filed: September 25, 2003	:	and
Atty Docket No. 199-0018US-D	:	NOTICE OF INTENT TO ISSUE
	:	CERTIFICATE OF CORRECTION

This is a decision on the petition filed on September 8, 2009, which is being treated as a petition under 37 CFR 1.705(d) requesting that the patent term adjustment indicated on the above-identified patent be corrected to indicate that the term of the above-identified patent is extended or adjusted by one thousand, six hundred and eighty-nine (1689) days.

The petition to correct the patent term adjustment indicated on the above-identified patent is **GRANTED to the extent indicated herein.** The patent term adjustment is corrected to indicate that the term of the above-identified patent is extended or adjusted by **one thousand six hundred sixty-four (1664)** days.

The over three year period beginning on September 26, 2006 and ending on August 11, 2009 is 1051 days. However, the time consumed by appellate review, beginning on the day the Notice of Appeal was filed (October 9, 2008) and ending on the date on which the Notice of Allowance was mailed (March 6, 2009), is excluded from the period of B-delay. This period is 149 days. As such, the over three year period is (1051 - 149) 902 days.

Moreover, there are 2 periods of overlap. 266 days of "A" delay associated with the mailing of the Office action on November 14, 2007 and 25 days of "A" delay associated with the mailing of the notice of allowance on March 6, 2009 overlap with the "B" delay. Accordingly, the patent term adjustment is increased by 611 (902 - (266 + 25)) days for B delay to 1664 days.

It is noted that patentee's calculation fails to consider the 25 days of overlap discussed above.

The Office will *sua sponte* issue a certificate of correction. Pursuant to 37 CFR 1.322, the Office will not issue a certificate of correction without first providing assignee or patentee an opportunity to be heard. Accordingly, patentees are given **one (1) month or thirty (30) days**, whichever is longer, from the mail date of this decision to respond. No extensions of time will be granted under § 1.136.

The application is being forwarded to the Certificates of Branch for issuance of a certificate of correction. The Office will issue a certificate of correction indicating that the term of the above-identified patent is extended or adjusted by **one thousand, six hundred and sixty-four (1664) days.**

Telephone inquiries specific to this matter should be directed to Senior Attorney Paul Shanoski at (571) 272-3225.

Nancy Johnson
Senior Petitions Attorney
Office of Petitions

Enclosure: Copy of DRAFT Certificate of Correction

UNITED STATES PATENT AND TRADEMARK OFFICE

CERTIFICATE OF CORRECTION

PATENT : 7,574,472 B2

DATED : **August 11, 2009** **DRAFT**

INVENTOR(S) : Biby et al.

It is certified that error appears in the above-identified patent and that said Letters Patent is hereby corrected as shown below:

On the cover page,

[*] Notice: Subject to any disclaimer, the term of this patent is extended or adjusted under 35 USC 154(b) by 1053 days

Delete the phrase "by 1053 days" and insert – by 1664 days--

UNITED STATES PATENT AND TRADEMARK OFFICE

Commissioner for Patents
United States Patent and Trademark Office
P.O. Box 1450
Alexandria, VA 22313-1450
www.uspto.gov

BLAKE, CASSELS & GRAYDON LLP
BOX 25, COMMERCE COURT WEST
199 BAY STREET, SUITE 2800
TORONTO ON M5L 1A9 CA CANADA

COPY MAILED

JAN 0 5 2006

OFFICE OF PETITIONS

In re Application of

Pippa, et al.

Application No. 10/670,521

Filed: September 26, 2003

Attorney Docket No. 64394/2

DECISION ON PETITION

This is a decision on the petition under 37 CFR §1.137(b), December 14, 2005, to revive the above-identified application.

The petition is **granted**.

This application became abandoned for failure to timely remit the issue fee of $1400.00 and the publication fee of $300.00 as required by the Notice of Allowance and Issue Fee Due (the "Notice") mailed September 13, 2005. The Notice set forth a three (3) month statutory period for reply. No response was received within the allowable period. Accordingly, this application became abandoned at midnight on December 13, 2005.

The issue fee of $1,400.00 and publication fee of $300.00 were received on December 14, 2005.

Form PTOL 85-B received December 14, 2005, is noted and made of record.

The application is being directed to Technology Center 2800, GAU 2875 for treatment of the amendment filed December 6, 2005.

Telephone inquiries concerning this matter may be directed to the undersigned at (571) 272-3222.

Kenya A. McLaughlin

Kenya A. McLaughlin
Petitions Attorney
Office of Petitions

UNITED STATES PATENT AND TRADEMARK OFFICE

Commissioner for Patents
United States Patent and Trademark Office
P.O. Box 1450
Alexandria, VA 22313-1450
www.uspto.gov

JAMES W. PETERSON
JONES DAY
2882 SAND HILL ROAD, SUITE 240
MENLO PARK, CA 94025

COPY MAILED
AUG 1 2 2005
OFFICE OF PETITIONS

In re Patent No. 6,828,564 :
Issue Date: December 7, 2004 :
Application No. 10/670,556 : ON PETITION
Filed: September 26, 2003 :
Attorney Docket No. 007413-067 :

This is a decision on the petition filed May 9, 2005, which is being treated as a petition under 37 CFR 3.81(b)[1] to correct assignee's name on the front page of the above-identified patent by way of a Certificate of Correction.

The petition is **granted.**

Telephone inquiries concerning this matter may be directed to the undersigned at (571) 272-3210. Any questions concerning the issuance of the Certificate of Correction should be directed to the Certificates of Correction Branch at (703) 305-8309.

This matter is being referred to the Certificates of Correction Branch for issuance of the requested Certificate of Correction.

Irvin Dingle
Petitions Examiner
Office of Petitions
Office of the Deputy Commissioner
for Patent Examination Policy

[1] See Official Gazette of June 22, 2004

UNITED STATES PATENT AND TRADEMARK OFFICE

Commissioner for Patents
United States Patent and Trademark Office
P.O. Box 1450
Alexandria, VA 22313-1450
www.uspto.gov

COMPUTER PATENT ANNUITIES
225 REINEKERS LANE
SUITE 400
ALEXANDRIA VA 22314

MAILED

JUL 13 2010

OFFICE OF PETITIONS

In re Patent No. 7,625,866	:	
Issue Date: December 1, 2009	:	
Application No. 10/670,563	:	DECISION ON PETITION
Filed: September 26, 2003	:	
Attorney Docket No. 06478.1494	:	

This is a decision on the petition filed May 6, 2010, under 37 CFR 1.181, which is being treated as a petition under 37 CFR 1.182, requesting issuance of a duplicate Letters Patent for the above-identified patent.

The petition is **GRANTED**.

The Publishing Division is directed to issue a duplicate Letters Patent.

Telephone inquiries concerning this decision may be directed to Diane C. Goodwyn at (571) 272-6735.

Inquiries regarding the issuance of a duplicate Letters Patent may be directed to Niomi Farmer in the Office of Data Management at (703) 756-1556.

A copy of this decision is being sent to the Office of Data Management for issuance of a duplicate Letters Patent.

Thurman K. Page
Petitions Examiner
Office of Petitions

cc: Niomi Farmer, Randolph Square, 9th Floor, Room D30-B (Fax No. (571) 270-9753)

SPE RESPONSE FOR CERTIFICATE OF CORRECTION

Paper No.: _____

DATE : 07/07/06

TO SPE OF : ART UNIT 2854

SUBJECT : Request for Certificate of Correction for Appl. No.: **10/670566** Patent No.: **7007943**

Please respond to this request for a certificate of correction within 7 days.

Please review the requested changes/corrections as shown in the **COCIN** document(s) in the IFW application image. No new matter should be introduced, nor should the scope or meaning of the claims be changed.

Please complete the response (see below) and forward the completed response to scanning using document code **COCX**.

A Green

Angela Green
Certificates of Correction Branch
703.308.9380 ext. 123

Thank You For Your Assistance

The request for issuing the above-identified correction(s) is hereby:

Note your decision on the appropriate box.

- ☑ **Approved** — All changes apply.
- ☐ **Approved in Part** — Specify below which changes **do not** apply.
- ☐ **Denied** — State the reasons for denial below.

Comments: _____

Judy Nguyen

JUDY NGUYEN
SUPERVISORY PATENT EXAMINER

_____ **SPE**

2854 **Art Unit**

UNITED STATES PATENT AND TRADEMARK OFFICE

Commissioner for Patents
United States Patent and Trademark Office
P.O. Box 1450
Alexandria, VA 22313-1450
www.uspto.gov

Paper No.

TAYLOR & AUST, P.C.
142 S. MAIN STREET
P.O. BOX 560
AVILLA, IN 46710

In re Application of :
Victor Soitu :
Application No. 10/670,588 :
Filed: September 2, 2003 :
For: CONSTRUCTION AND METHOD IN :
ELECTRIC MOTOR DRIVE :

COPY MAILED
NOV 0 4 2004
OFFICE OF PETITIONS

This is a decision on the Petition for Review of Notice of Incomplete Nonprovisional Application and Request for Refund, filed October 12, 2004, requesting the application be accorded a filing date of September 2, 2003, including 5 sheets of drawings described in the specification.

The petition is **granted**.

The application was filed on September 2, 2003. However, on August 23, 2004, the Office of Initial Patent Examination mailed a Notice of Incomplete Nonprovisional Application, noting that a filing date had not been accorded the application because the application had been deposited without drawings. The Notice also stated that the oath or declaration had not been filed.

In response, Petitioner files the instant petition wherein Petitioner avers that four (5) sheets of drawings were originally filed with the application on September 2, 2003, and were received by this Office as evidenced by the return-receipt postcard. In support, Petitioner provides a copy of a return receipt postcard acknowledging receipt of, *inter alia*, 5 sheets of drawings and an executed declaration on September 2, 2003.

A review of the return receipt postcard reveals that Petitioner is correct. The postcard acknowledges receipt of 5 sheets of drawings and an executed declaration on September 2, 2003. Petitioner has also re-submitted 5 sheets of drawings and executed declaration with the instant petition.

Evidence of receipt of any correspondence filed in the Patent and Trademark Office can be obtained by submitting a self-addressed postcard properly itemizing and identifying the paper or papers being filed. Upon receipt of the correspondence, the Patent and Trademark Office will check the listing on the post card against the papers submitted, making sure that all items listed are present and will then stamp the postcard with an Official date stamp and place the postcard in the outgoing mail. "A postcard receipt which itemizes and properly identifies the papers which are being filed serves as *prima facie* evidence of receipt in the PTO of all items listed thereon by the PTO." MPEP § 503.

The copy of 5 sheets of drawings supplied on September 2, 2003, will be used for examination purposes.

The oath or declaration filed with the instant petition has been entered and made of record.

A refund of the petition fee has been credited to deposit account 20-0095 as authorized in the instant petition.

The application will be returned to the Office of Initial Patent Examination for further processing as a nonprovisional application with a filing date of September 25, 2003, and an indication that 5 sheets of drawings and an executed declaration were present on filing, using the 5 sheets of drawings and executed declaration filed on October 12, 2004.

Telephone inquiries concerning this matter should be directed to the undersigned at (571) 272-3232.

Derek L. Woods
Attorney Advisor
Office of Petitions

UNITED STATES PATENT AND TRADEMARK OFFICE

COMMISSIONER FOR PATENTS
UNITED STATES PATENT AND TRADEMARK OFFICE
P.O. BOX 1450
ALEXANDRIA, VA 22313-1450
www.uspto.gov

MATTINGLY, STANGER, MALUR &
BRUNDIDGE, P.C.
1800 Diagonal Road
Suite 370
Alexandria, VA 22314

MAILED
SEP 28 2005
Technology Center 2100

In re Application of:
KANEDA et al.
Application No. 10/670,590
Filed: September 25, 2003
For: METHOD FOR ALLOCATING STORAGE REGIONS AND PERFORMANCE GUARANTEE METHOD BASED ON HINTS, STORAGE DEVICE AND MANAGEMENT PROGRAM

DECISION ON PETITION TO MAKE SPECIAL

This is a decision on the petition, filed on July 18, 2005 under 37 C.F.R. §102(d) and M.P.E.P. § 708.02(VIII): Accelerated Examination, to make the above-identified application special.

The petition is **GRANTED**.

M.P.E.P. § 708.02, Section VIII which sets out the prerequisites for a grantable petition for Accelerated Examination under 37 C.F.R. § 102(d) states in relevant part:

> A new application (one which has not received any examination by the examiner) may be granted special status provided that applicant (and this term includes applicant's attorney or agent) complies with each of the following items:
>
> (A) Submits a petition to make special accompanied by the fee set forth in 37 CFR 1.17(h);
>
> (B) Presents all claims directed to a single invention, or if the Office determines that all the claims presented are not obviously directed to a single invention, will make an election without traverse as a prerequisite to the grant of special status;
>
> (C) Submits a statement(s) that a pre-examination search was made, listing the field of search by class and subclass, publication, Chemical Abstracts, foreign patents, etc. A search made by a foreign patent office satisfies this requirement;
>
> (D) Submits one copy each of the references deemed most closely related to the subject matter encompassed by the claims if said references are not already of record; and

(E) Submits a detailed discussion of the references, which discussion points out, with the particularity required by 37 CFR 1.111 (b) and (c), how the claimed subject matter is patentable over the references.

In those instances where the request for this special status does not meet all the prerequisites set forth above, applicant will be notified and the defects in the request will be stated. The application will remain in the status of a new application awaiting action in its regular turn. In those instances where a request is defective in one or more respects, applicant will be given one opportunity to perfect the request in a renewed petition to make special. If perfected, the request will then be granted. If not perfected in the first renewed petition, any additional renewed petitions to make special may or may not be considered at the discretion of the Group Special Program Examiner.

Applicant's submission of July 18, 2005 meets all the criteria set out above. Accordingly, the petition is **GRANTED**. The application file is being forwarded to the Examiner for accelerated examination in accordance with M.P.E.P. § 708.02. If the application is subsequently allowed, it will be given priority for printing. See M.P.E.P. § 1309.

Vincent N. Trans
Special Program Examiner
Technology Center 2100
Computer Architecture, Software, and
Information Security
571-272-3613

UNITED STATES PATENT AND TRADEMARK OFFICE

Commissioner for Patents
United States Patent and Trademark Office
P.O. Box 1450
Alexandria, VA 22313-1450
www.uspto.gov

BRISTOL-MYERS SQUIBB COMPANY
PATENT DEPARTMENT
PO BOX 4000
PRINCETON NJ 08543-4000

COPY MAILED

NOV 22 2005

OFFICE OF PETITIONS

In re Patent No. 6,919,356	:	
Douglas G. Batt	:	DECISION ON
Issue Date: July 19, 2005	:	PATENT TERM ADJUSTMENT
Application No. 10/670,596	:	AND NOTICE OF INTENT
Filed: September 25, 2003	:	TO ISSUE
Attorney Docket No. 7440 NP	:	CERTIFICATE OF CORRECTION

This is a decision on the "PETITION TO CORRECT PATENT TERM ADJUSTMENT PERIOD IN GRANTED PATENT UNDER 37 CFR 1.702(a)(4)", filed September 19, 2005. Patentee requests that the patent term adjustment indicated on the patent be corrected from zero (0) days to sixty (60) days.

The request for reconsideration of the patent term adjustment indicated on the patent is **GRANTED**.

The patent term adjustment indicated on the patent is to be corrected by issuance of a certificate of correction showing a revised Patent Term Adjustment of **sixty (60) days**.

On July 19, 2005, the above-identified application matured into U.S. Patent No. 6,919,356. The patent issued with a Patent Term Adjustment of zero (0) days. The instant request for reconsideration filed September 19, 2005, was timely filed within two months of the date the patent issued. See § 1.705(d). Patentee fails to state whether the patent is subject to a terminal disclaimer.

The Office determined a patent term adjustment of 0 days based on an adjustment for PTO delay of 60 days pursuant to 35 U.S.C. 154(b)(1)(A)(iv) and 37 C.F.R. §1.703(a)(6), reduced by applicant's delay of 120 days pursuant to 35 U.S.C.

154(b)(2)(C)(ii) and 37 C.F.R. §1.704(c)(10). The PTO delay is not contested. The adjustment of 120 days is at issue.

The adjustment of 120 days has been found to be incorrect. With his transmittal of the issue fee, applicant filed a "Fee Address Indication Form". By Official Gazette Notice dated June 26, 2001, the Director has advised applicants and patentees that the filing of certain papers after the mailing of a Notice of Allowance will not be considered a "failure to engage in reasonable efforts" to conclude processing or examination of an application and will not result in reduction of a patent term adjustment pursuant to 37 C.F.R. §1.704(c)(10). See Clarification of 37 CFR 1.704(c)(10) - Reduction of Patent Term Adjustment for Certain Types of Papers Filed After a Notice of Allowance, 1247 OG 111 (June 26, 2001).

A "Change of Address" is specified as being a paper that is not considered to be "failure to engage". In this situation, it is concluded that the "Fee Address Indication Form" is analogous to a "Change of Address", and accordingly no reduction in PTA is warranted. In view thereof, the correct determination of PTA at the time of issuance is 60 days.

The $200.00 fee set forth in 37 C.F.R. §1.18(e) has been charged to Deposit Account No. 19-3880, as authorized. Petitioner's request that this fee not be charged, as the error was ascribable to the Office, is dismissed.[1]

The application file is being forwarded to the Certificates of Correction Branch for issuance of a certificate of correction in order to rectify the error regarding the patent term information. See 35 U.S.C. §254 and 37 C.F.R. §1.322. The certificate of correction will indicate that the term of the above-identified patent is extended or adjusted by **sixty (60) days** subject to any disclaimers.

Telephone inquiries specific to this matter should be directed to Cliff Congo, Petitions Attorney, at (571)272-3207.

Kery Fries

Kery Fries
Senior Legal Advisor
Office of Patent Legal Administration
Office of Deputy Commissioner
for Patent Examination Policy

Enc: draft Certificate of Correction (1 page)

---

[1] See Comment 1 in Changes to Implement Patent Term Adjustment under Twenty-Year Patent Term; Final Rule, 1239 OG 14, 65 Fed. Reg. 54366 (Oct. 3 2000) (stating that the fee set forth in 37 C.F.R. 1.18(e) is charged to allow the Office to recover the estimated average cost of treating applications for patent term adjustment, and is not refundable even in the event of Office error).

UNITED STATES PATENT AND TRADEMARK OFFICE

Commissioner for Patents
United States Patent and Trademark Office
P.O. Box 1450
Alexandria, VA 22313-1450
www.uspto.gov

USDA, ARS, OTT
5601 SUNNYSIDE AVE
RM 4-1159
BELTSVILLE, MD 20705-5131

COPY MAILED

JUN 20 2008

OFFICE OF PETITIONS

In re Application of	:	
Ulrich R. Bernier, et al.	:	
Application No. 10/670,598	:	DECISION ON PETITION
Filed: September 26, 2003	:	
Attorney Docket No. 0148.01	:	

This is a decision on the petition under the unintentional provisions of 37 CFR 1.137(b), filed November 30, 2007, to revive the above-identified application.

The petition is **GRANTED**.

The application became abandoned for failure to reply in a timely manner to the Notice of Non-Compliant Amendment (37 CFR 1.121), mailed December 15, 2006 , which set a shortened statutory period for reply of one (1) month or thirty (30) days (whichever is later). No extensions of time under the provisions of 37 CFR 1.136(a) were obtained. Accordingly, the application became abandoned on January 16, 2007.

The petition satisfies the requirements of 37 CFR 1.137(b) in that petitioner has supplied (1) the reply in the form of an amendment, (2) the petition fee of $1540, and (3) a proper statement of unintentional delay.

Telephone inquiries concerning this decision should be directed to undersigned at (571) 272-1642.

This application is being referred to Technology Center AU 1616 for appropriate action by the Examiner in the normal course of business on the reply received November 30, 2007.

April M. Wise
Petitions Examiner
Office of Petitions

UNITED STATES PATENT AND TRADEMARK OFFICE

Commissioner for Patents
United States Patent and Trademark Office
P.O. Box 1450
Alexandria, VA 22313-1450
www.uspto.gov

MORRISON & FOERSTER, LLP
555 W. FIFTH STREET, SUITE 3500
LOS ANGELES, CA 90013-1024

COPY MAILED

AUG 1 1 2008

In re Application of	:	
TRIPLETT, et al.	:	
Application No. 10/670,625	:	DECISION ON PETITION
Filed: September 25, 2003	:	TO WITHDRAW
Attorney Docket No. 1016720012P	:	FROM RECORD
	:	

This is a decision on the Request to Withdraw as attorney or agent of record under 37 C.F.R. § 1.36(b), filed May 5, 2008.

The request is DISMISSED as moot.

A review of the file record indicates that the power of attorney to MORRISON & FOERSTER, LLP has been revoked by the assignee of the patent application on May 16, 2008. Accordingly, the request to withdraw under 37 C.F.R. § 1.36(b) is moot.

All future communications from the Office will continue to be directed to the below-listed address until otherwise notified by applicant.

Telephone inquires concerning this decision should be directed to the undersigned at 571-272- 7253.

Monica A. Graves
Petitions Examiner
Office of Petitions

cc: RUTAN & TUCKER, LLP.
611 ANTON BOULEVARD, SUITE 1400
COSTA MESA, CA 92626

UNITED STATES PATENT AND TRADEMARK OFFICE

UNITED STATES DEPARTMENT OF COMMERCE
United States Patent and Trademark Office
Address: COMMISSIONER FOR PATENTS
P.O. Box 1450
Alexandria, Virginia 22313-1450
www.uspto.gov

IBM CORPORATION
3039 CORNWALLIS RD.
DEPT. T81 / B503, PO BOX 12195
RESEARCH TRIANGLE PARK, NC 27709

Mail Date: 04/20/2010

Applicant	: Andreas Arning	: DECISION ON REQUEST FOR
Patent Number	: 7660855	: RECALCULATION of PATENT
Issue Date	: 02/09/2010	: TERM ADJUSTMENT IN VIEW
Appliction No	: 10/670,638	: OF WYETH AND NOTICE OF INTENT TO
Filed	: 09/24/2003	: ISSUE CERTIFICATE OF CORRECTION
		:

The Request for Recalculation is **GRANTED** to the extent indicated.

The patent term adjustment has been determined to be **1812** days. The USPTO will *sua sponte* issue a certificate of correction reflecting the amount of PTA days determined by the recalculation.

Prior to the issuance of the certificate of correction, the USPTO will afford patentee an opportunity to be heard and request reconsideration. Accordingly, patentee has **one month or thirty (30) days**, whichever is longer, to file a request for reconsideration of this patent term adjustment calculation. See 35 U.S.C. 154(b)(3)(B)(ii) and 37 CFR 1.322(a)(4). No extensions of time will be granted under 37 CFR 1.136.

Patentee should use document code PET.OP if electronically filing a request for reconsideration of this patent term adjustment calculation. The patentee must also include the information required by 37 CFR 1.705(b)(2) and the fee required by 37 CFR 1.18(e). If patentee does not file a timely request for reconsideration of this patent term adjustment calculation including the information required by 37 CFR 1.705(b)(2) and the fee required by 37 CFR 1.18(e), the USPTO will issue a certificate of correction reflecting the PTA determination noted above.

Patentee should be aware that in order to preserve the right to review in the United States District Court for the District of Columbia of the USPTO patent term adjustment determination, patentee must ensure that he or she also take the steps required under 35 U.S.C. 154(b)(4)(A) in a timely manner. Nothing in the request for recalculation should be construed as providing an alternative time frame for commencing a civil action under 35 U.S.C. 154(b)(4)(A).

Any questions concerning this decision should be directed to the Office of Patent Legal Administration at 571-272-7702.

UNITED STATES PATENT AND TRADEMARK OFFICE

COMMISSIONER FOR PATENTS
UNITED STATES PATENT AND TRADEMARK OFFICE
P.O. BOX 1450
ALEXANDRIA, VA 22313-1450
www.uspto.gov

3M INNOVATIVE PROPERTIES COMPANY
PO BOX 33427
ST. PAUL, MN 55133-3427

COPY MAILED

FEB 0 1 2006

OFFICE OF PETITIONS

In re Application of
Phillip J. Bouic, et al.
Application No. 10/670,659
Filed: September 25, 2003
Attorney Docket No.: 58105US003

ON PETITION

This is a decision on the petition, filed January 26, 2006, under 37 CFR 1.313(c)(2) to withdraw the above-identified application from issue after payment of the issue fee.

The petition is **GRANTED**.

The above-identified application is withdrawn from issue for consideration of a submission under 37 CFR 1.114 (request for continued examination). See 37 CFR 1.313(c)(2).

Petitioner is advised that the issue fee paid on November 15, 2005, in the above-identified application cannot be refunded. If, however, the above-identified application is again allowed, petitioner may request that it be applied towards the issue fee required by the new Notice of Allowance. [1]

Telephone inquiries relating to this decision should be directed to the undersigned at (571) 272-3204.

The application is being referred to Technology Center AU 3752 for further processing of the request for continued examination under 37 CFR 1.114.

Sherry D. Brinkley
Petitions Examiner
Office of Petitions

[1]The request to apply the issue fee to the new Notice may be satisfied by completing and returning the new Issue Fee Transmittal Form PTOL-85(b), which includes the following language thereon: "Commissioner for Patents is requested to apply the Issue Fee and Publication Fee (if any) or re-apply any previously paid issue fee to the application identified above." Petitioner is advised that, whether a fee is indicated as being due or not, the Issue Fee Transmittal Form **must** be completed and timely submitted to avoid abandonment. Note the language in bold text on the first page of the Notice of Allowance and Fee(s) Due (PTOL-85).

UNITED STATES PATENT AND TRADEMARK OFFICE

Commissioner for Patents
United States Patent and Trademark Office
P.O. Box 1450
Alexandria, VA 22313-1450
www.uspto.gov

Date : January 31, 2006

TO : Director, Office of Patent Publication

FROM : Office of the Deputy Commissioner for Patent Examination Policy

SUBJECT : Withdrawal from Issue of

Applicant(s) : Phillip J. Bouic, et al.
Application No. : 10/670,659
Filed : September 25, 2003

The above-identified application has been assigned Patent No. 6,997,398 and an issue date of February 14, 2006.

It is hereby directed that this application be withdrawn from issue at the request of the applicant.

Do not refund the issue fee.

The following erratum should be published in the Official Gazette if the above-identified application is published in the OG of February 14, 2006:

> "All reference to Patent No. 6,997,398 to PHILLIP J. BOUIC, ET AL. of UNITED KINGDOM for SECURITY CLIP FOR SPRAY GUN CONNECTOR appearing in the Official Gazette of February 14, 2006, should be deleted since no patent was granted."

Sherry D. Brinkley
Petitions Examiner
Office of Petitions
Office of the Deputy Commissioner
for Patent Examination Policy

cc: Paul Harrison, Crystal Park 3-44l (FAX-306-2737)
Deneise Boyd, Crystal Park 2, Suite 1100 (FAX-308-5413)
Mary Louise McAskill, Crystal Park 3-910 (FAX 305-4372)
Niomi Farmer, Crystal Park 3-9l0 (FAX-305-4372)
Mary E. Johnson (Cookie), P/OCS, CM1-6D07
Duane K.Davis, P/OCS, CM1-6A07
Tamara K. Greene, PK3-910

UNITED STATES PATENT AND TRADEMARK OFFICE

Commissioner for Patents
United States Patent and Trademark Office
P.O. Box 1450
Alexandria, VA 22313-1450
www.uspto.gov

LERNER AND GREENBERG PA
P O BOX 2480
HOLLYWOOD, FL 33022-2480

COPY MAILED

FEB 07 2005

OFFICE OF PETITIONS

In re Application of	:	
Gerhard Klaassen et al	:	
Application No. 10/670,661	:	DECISION GRANTING PETITION
Filed: September 25, 2003	:	UNDER 37 CFR 1.137(b)
Attorney Docket No. A-3916	:	

This is a decision on the petition under 37 CFR 1.137(b), filed October 14, 2004, to revive the above-identified application.

The petition is **GRANTED**.

This application became abandoned, by operation of law, for failure to timely reply within the three month shortened statutory period set in the nonfinal Office action mailed March 30, 2004. No extensions of time having been obtained pursuant to the provisions of 37 CFR 1.136(a), the date of abandonment of this application is July 1, 2004.

The petition satisfies the conditions for revival pursuant to the provisions of 37 CFR 1.137(b) in that (1) the reply (amendment); (2) the petition fee of $1,370; and (3) the required statement of unintentional delay have been received. Accordingly, the reply to the nonfinal Office action of March 30, 2004 is accepted as having been unintentionally delayed.

Telephone inquiries concerning this decision should be directed to the undersigned at (571) 272-3218.

The matter is being referred to Technology Center AU 2854 for appropriate action on the concurrently filed amendment.

Frances Hicks

Frances Hicks
Petitions Examiner
Office of Petitions
Office of the Deputy Commissioner
for Patent Examination Policy

United States
Patent And
Trademark Office

P.O. Box 1450, Alexandria, Virginia 22313-1450 – www.uspto.gov

11/14/03

Steven G. Saunders
Bromberg & Sunstein LLP
125 Summer Street
Boston, MA 02110-1618

Dear Applicant:

The Box PGPub replacement drawings for application number 10/670673 received on 10/27/03 by the U. S. Patent and Trademark Office will be included for patent publication.

Telephone inquiries should be directed to Kaletus King, Office of Pre-Grant Publication, at 703 605-4283.

Kaletus King

Signature of Reviewer, Office of Pre-Grant Publication

UNITED STATES PATENT AND TRADEMARK OFFICE

Commissioner for Patents
United States Patent and Trademark Office
P.O. Box 1450
Alexandria, VA 22313-1450
www.uspto.gov

PILLSBURY WINTHROP SHAW PITTMAN, LLP
P.O. BOX 10500
MCLEAN VA 22102

COPY MAILED

JUN 3 0 2008

OFFICE OF PETITIONS

In re Application of	:	
Lawrence A. Stabile, et al.	:	
Application No. 10/670,692	:	DECISION ON PETITION
Filed: September 25, 2003	:	
Attorney Docket No. 019287-0317335	:	

This is a decision on the petition under the unintentional provisions of 37 CFR 1.137(b), filed October 26, 2007, to revive the above-identified application.

The petition is **GRANTED**.

This application became abandoned for failure to timely pay the issue fee and to submit corrected formal drawings on or before January 26, 2007, as required by the Notice of Allowance and Fee(s) Due and the Notice of Allowability, mailed October 26, 2006. Accordingly, the date of abandonment of this application is January 27, 2007. The Notice of Abandonment was mailed February 22, 2007.

The petition satisfies the requirements of 37 CFR 1.137(b) in that petitioner has supplied (1) the reply in the form of payment of the issue fee of $1,440, and corrected formal drawings , (2) the petition fee of $1,540; and (3) a proper statement of unintentional delay.

Telephone inquiries concerning this decision should be directed to Terri Williams at (571) 272-2991.

This application is being referred to the Office of Data Management for processing into a patent.

Chris Bottorff
Petitions Examiner
Office of Petitions

UNITED STATES PATENT AND TRADEMARK OFFICE

Commissioner for Patents
United States Patent and Trademark Office
P.O. Box 1450
Alexandria, VA 22313-1450
www.uspto.gov

MORRISON & FOERSTER LLP
1650 TYSONS BOULEVARD
SUITE 400
MCLEAN, VA 22102

COPY MAILED

AUG 30 2007

OFFICE OF PETITIONS

In re Application of	:	
Xing Su, et al.	:	
Application No. 10/670,701	:	DECISION ON PETITION
Filed: September 24, 2003	:	TO WITHDRAW
Attorney Docket No. 070702006700	:	FROM RECORD
	:	

This is a decision on the Request to Withdraw as attorney or agent of record under 37 C.F.R. § 1.36(b) filed April 2, 2007.

The request is **DISMISSED** as moot.

A review of the file record indicates that the power of attorney to Morrison & Foerster, LLP has been revoked by the assignee of the patent application on June 16, 2007. Accordingly, the request to withdraw under 37 C.F.R. § 1.36(b) is moot.

All future communications from the Office will continue to be directed to the below-listed address until otherwise notified by applicant.

Telephone inquires concerning this decision should be directed to undersigned at 571-272-1642.

April M. Wise
Petitions Examiner
Office of Petitions

cc: RAJ S. DAVE', PHD
DARBY & DARBY, PC
1500 K STREET NW
SUITE 250
WASHINGTON, DC 20005-1714

UNITED STATES PATENT AND TRADEMARK OFFICE

Commissioner for Patents
United States Patent and Trademark Office
P.O. Box 1450
Alexandria, VA 22313-1450
www.uspto.gov

Paper No.

Lloyd W. Sadler
Parsons Behle & Latimer
Suite 1800
201 South Main Street
Salt Lake City, UT 84111

COPY MAILED

JAN 3 2005

OFFICE OF PETITIONS

In re Application of
Dobson et al.
Application No. 10/670,708
Filed: September 24, 2003
Attorney Docket No. 4501 P

DECISION GRANTING PETITION
UNDER 37 CFR 1.137(f)

This is a decision on the petition to revive the instant nonprovisional application under the unintentional provisions of 37 CFR 1.137(f), filed December 13, 2004.

The petition is **GRANTED**.

Petitioner states that the instant nonprovisional application is the subject of an application filed on September 24, 2004, in a foreign country, or under a multinational international treaty, that requires publication of applications eighteen months after filing. However, the U.S. Patent and Trademark Office was unintentionally not notified of this filing within 45 days subsequent to the filing of the foreign or international application.

In view of the above, this application became abandoned pursuant to 35 U.S.C. § 122(2)(B)(iii) and 37 CFR 1.213(c) for failure to timely notify the Office of the filing of an application in a foreign country, or under a multilateral international agreement, that requires publication of applications 18 months after filing.

A petition under 37 CFR 1.137(f) must be accompanied by:

(1) the reply, which is met by the notification of such filing in a foreign country or under a multinational treaty;

(2) the petition fee as set forth in 37 CFR 1.17(m); and

(3) a statement that the entire delay in filing the required reply from the due date of the reply until the filing of a grantable petition was unintentional.

The instant petition has been found to be in compliance with 37 CFR 1.137(f).

Accordingly, the failure to timely notify the Office of a foreign or international filing within 45 days after the date of filing

of such foreign or international application as provided by 35 U.S.C. 122(b)(2)(B)(iii) and 37 CFR 1.213(c) is accepted as having been unintentionally delayed.

The previous Request and Certification under 35 U.S.C. 122(b)(2)(B)(i) has been rescinded. A Notice Regarding Rescission of Nonpublication Request to show the projected publication date of April 7, 2005 accompanies this decision on petition.

The application is being forwarded to Technology Center 2631 for examination in due course.

Telephone inquiries regarding this decision should be directed to the undersigned at (571) 272-3219.

Nancy Johnson
Senior Petitions Attorney
Office of Petitions

Enclosure: Notice Regarding Rescission of Nonpublication Request

UNITED STATES PATENT AND TRADEMARK OFFICE

Commissioner for Patents
United States Patent and Trademark Office
P.O. Box 1450
Alexandria, VA 22313-1450
www.uspto.gov

Terrance A. Meador, Esq.
INCAPLAW
1050 Rosecrans Street, Suite K
San Diego CA 92106

COPY MAILED
MAY 1 8 2004
OFFICE OF PETITIONS

In re Application of
Richard Blake, Stephen Kenney, Christopher McKewon and William O'Riordan
Application No. 10/670,763
Filed: September 25, 2003
Attorney Docket Number: ESST1000
Title of Invention: System, Method and Business Method For Storage, Search and Retrieval of Clinical Information

DECISION GRANTING STATUS UNDER 37 CFR 1.47(a)

This is in response to the petition under 37 CFR 1.47(a), filed March 15, 2004.

The petition is GRANTED.

Petitioner has shown the non-signing inventor Richard Blake has refused to join in the filing of the above-identified application after having been presented with the application papers. The petition attest a copy of the application papers was sent to non-signing inventor's last known address. The non-signing inventor's failure to respond to the application mailing sufficiently establishes that he refuses to execute the application papers.

The above-identified application and papers have been reviewed and found in compliance with 37 CFR 1.47(a). This application is hereby accorded Rule 1.47(a) status.

As provided in Rule 1.47(c), this Office will forward notice of this application's filing to the non-signing inventor at the address given in the petition. Notice of the filing of this

application will also be published in the Official Gazette.

This application is being forwarded to the Office of Initial Patent Examination for further processing.

Telephone inquiries related to this decision may be directed to the undersigned at (703) 306-0251.

Charlema R. Grant

Charlema R. Grant
Petitions Attorney
Office of Petitions

UNITED STATES PATENT AND TRADEMARK OFFICE

Commissioner for Patents
United States Patent and Trademark Office
P.O. Box 1450
Alexandria, VA 22313-1450
www.uspto.gov

Terrance A. Meador, Esq.
INCAPLAW
1050 Rosecrans Street, Suite K
San Diego CA 92106

COPY MAILED

DEC 17 2004

OFFICE OF PETITIONS

In re Application of Blake et al. Application No.10/670,763 Filed: September 25, 2003 Attorney Docket No. ESST1000 Title of Invention: SYSTEM, METHOD, AND BUSINESS METHOD FOR STORAGE, SEARCH AND RETRIEVAL OF CLINICAL INFORMATION	: : : : : : :	DECISION UNDER 37 CFR 1.47(a)

This is in response to the "Transmittal and Request to Remove 37 CFR 1.47 Status" filed October 18, 2004, under 37 C.F.R. §1.47(a).

The request to remove 37 C.F.R. §1.47(a) status is **Dismissed as Inappropriate**.

37 CFR 1.47 status was granted in the above identified application on May 18, 2004. Petitioner request that 37 CFR 1.47 status be removed from the application and has submitted a declaration executed by Richard Blake.

Applicants' request has been considered but is being dismissed as inappropriate because a patent granted on an application accepted under 37 CFR 1.47 will have an indication on the face of the patent that the application was filed under 37 CFR 1.47, regardless of whether proper joinder of the previously nonsigning inventor has been made. See MPEP 409.03(j).

Accordingly, the granting of 37 CFR 1.47 status will not be removed. The previously nonsigning inventor's executed declaration will be placed in the application file. All correspondence will continue to be mailed to the correspondence address of record.

Telephone inquiries related to this decision may be directed to the undersigned at (571) 272-3215.

Charlema R. Grant
Petitions Attorney
Office of Petitions

UNITED STATES PATENT AND TRADEMARK OFFICE

Commissioner for Patents
United States Patent and Trademark Office
P.O. Box 1450
Alexandria, VA 22313-1450
www.uspto.gov

APR - 5 2006

Richard E. Kurtz
Greenberg Traurig, LLP
1750 Tysons Blvd, 12th Floor
McLean, Virginia 22102

In re Application of: STAW :
Appl. No.: 10/670,777 : DECISION ON PETITION
Filed: September 26, 2003 :
For: GAME PAYOUT VALUE MODIFICATION :
SYSTEM AND METHODS

This is a decision on the petition filed on July 27, 2005 by which petitioner requests acceptance of a duplicate paper. The petition is considered pursuant to 37 CFR 1.181, and no fee is required.

The petition is granted.

On December 14, 2004 an Office Action was issued in the instant file. Petitioner allegedly filed an amendment under 37 CFR 1.112 on June 14, 2005 via facsimile. This paper was inadvertently faxed to fax number (703) 306-5995 and was received by USPTO Assignment Division. On July 25, 2005, the USPTO Assignment Division returned the paper to petitioner stating it lacked an appropriate cover sheet for processing. Petitioner has submitted an evidentiary copy of the returned submission, which includes a certificate of facsimile transmission under 37 CFR 1.8, dated June 14, 2005. As USPTO Assignment Division returned the papers to petitioner, in can be concluded the papers were timely transmitted and received by the USPTO. Based upon this evidence, the duplicate paper is accepted.

The application is being forwarded to the Head Supervisory Applications Examiner in Technology Center 3700 to have an entry in the PALM system made to show acceptance of the duplicate copy of the June 14, 2005 amendment, entry of said amendment, processing of any extensions of time necessary, and forwarding of the application to the examiner for action on the amendment in due course.

PETITION GRANTED

Karen M. Young

Karen Young, Director
Technology Center 3700

UNITED STATES PATENT AND TRADEMARK OFFICE

Commissioner for Patents
United States Patent and Trademark Office
P.O. Box 1450
Alexandria, VA 22313-1450
www.uspto.gov

SIEMENS CORPORATION
INTELLECTUAL PROPERTY DEPT
170 WOOD AVE SOUTH
ISELIN NJ 08830

COPY MAILED

AUG 0 9 2005

OFFICE OF PETITIONS

In re Application of	:	
Detlef Haje	:	
Application No. 10/670,804	:	DECISION ON PETITION
Filed: September 25, 2003	:	
Attorney Docket No. 2001P05028WOUS	:	

This is a decision on the petition under 37 CFR 1.78(a)(3), filed July 22, 2005, to accept an unintentionally delayed claim under 35 U.S.C. §§ 120 and 365 (c) for the benefit of priority to international application no. PCT/EP02/03555.

The petition is **DISMISSED**.

A petition for acceptance of a claim for late priority under 37 CFR 1.78(a)(3) is only applicable to those applications filed on or after November 29, 2000. Further, the petition is appropriate only after the expiration of the period specified in 37 CFR 1.78(a)(2)(ii). In addition, the petition under 37 CFR 1.78(a)(3) must be accompanied by:

(1) the reference required by 35 U.S.C. § 120 and CFR 1.78(a)(2)(i) of the prior-filed application(s),unless previously submitted;

(2) the surcharge set forth in § 1.17(t); and

(3) a statement that the entire delay between the date the claim was due under 37 CFR § 1.78(a)(2)(ii) and the date the claim was filed was unintentional. The Commissioner may require additional information where there is a question whether the delay was unintentional.

The amendment submitted concurrently with the instant petition as drafted is unacceptable, and therefore is not considered a proper reference under 37 CFR 1.78(a)(2)(i). In this regard, the amendment is physically part of the instant petition, and as such, does not comply with 37 CFR 1.121, 1.52, or 1.4(c). Note that 37 CFR 1.121 states that amendments are made by filing a paper, in compliance with § 1.52, directing that specified amendments be made. The pertinent section of 37 CFR 1.52 states that the claim (in this case, the claim for priority) must commence on a separate physical sheet. 37 CFR 1.4(c) states that each distinct subject matter must be contained in a separate paper since different matters may be considered by different branches of the Office.

In view of the above, the amendment to add a priority claim to the first line of the specification, which is physically embedded in the instant petition, is not acceptable. Accordingly, a substitute amendment in compliance with the aforementioned rules, along with a renewed petition under 37 CFR 1.78(a)(3), must be submitted.

The file does not indicate a change of address has been submitted, although the address given on the petition differs from the address of record. If appropriate, a change of address should be filed in accordance with MPEP 601.03. A courtesy copy of this decision is being mailed to the address given on the petition; however, the Office will mail all future correspondence solely to the address of record.

Further correspondence with respect to this matter should be addressed as follows:

By mail: Mail Stop Petitions
Commissioner for Patents
PO Box 1450
Alexandria, VA 22313-1450

By fax: (571)273-8300
Attn: Office of Petitions

Telephone inquiries concerning this matter should be directed to Petitions Attorney Cliff Congo at (571)272-3207.

Frances Hicks

Frances Hicks
Petitions Examiner
Office of Petitions

cc: Siemens Corporation
Intellectual Property Dept
186 Wood Ave South
Iselin NJ 08830

UNITED STATES PATENT AND TRADEMARK OFFICE

Commissioner for Patents
United States Patent and Trademark Office
P.O. Box 1450
Alexandria, VA 22313-1450
www.uspto.gov

SIEMENS CORPORATION
INTELLECTUAL PROPERTY DEPT
170 WOOD AVE SOUTH
ISELIN NJ 08830

COPY MAILED

NOV 17 2005

OFFICE OF PETITIONS

In re Application of	:	
Detlef Haje	:	
Application No. 10/670,804	:	DECISION ON PETITION
Filed: September 25, 2003	:	
Attorney Docket No. 2001P05028WOUS	:	

This is a decision on the renewed petition under 37 CFR 1.78(a)(3), filed August 12, 2005, to accept an unintentionally delayed claim under 35 U.S.C. §§ 120 and 365 (c) for the benefit of priority to international application no. PCT/EP02/03555.

The petition is **GRANTED**.

A petition for acceptance of a claim for late priority under 37 CFR 1.78(a)(3) is only applicable to those applications filed on or after November 29, 2000. Further, the petition is appropriate only after the expiration of the period specified in 37 CFR 1.78(a)(2)(ii). In addition, the petition under 37 CFR 1.78(a)(3) must be accompanied by:

(1) the reference required by 35 U.S.C. § 120 and CFR 1.78(a)(2)(i) of the prior-filed application(s),unless previously submitted;

(2) the surcharge set forth in § 1.17(t); and

(3) a statement that the entire delay between the date the claim was due under 37 CFR § 1.78(a)(2)(ii) and the date the claim was filed was unintentional. The Commissioner may require additional information where there is a question whether the delay was unintentional.

The petition complies with the requirements for a grantable petition under 37 CFR 1.78(a)(3) in that (1) a reference to the above-noted, prior-filed PCT application has been included in an amendment to the first sentence of the specification following the title, as provided by 37 CFR 1.78(a)(2)(iii); (2) the surcharge fee required by 37 CFR 1.17(t) has been submitted; and (3) the petition contains a proper statement of unintentional delay. Accordingly, having found that the instant petition for acceptance of an unintentionally delayed claim for the benefit of priority under 35 U.S.C. §§ 120 and 365(c) to the above-noted, prior-filed PCT application satisfies the conditions of 37 CFR 1.78(a)(3), the petition is granted.

The granting of the petition to accept the delayed benefit claim to the prior-filed application under 37 CFR 1.78(a)(3) should not be construed as meaning that the instant application is entitled to the benefit of the prior-filed application. In order for the instant application to be entitled to the benefit of the prior-filed application, all other requirements under 35 U.S.C. §§ 120 and 365(c) and 37 CFR 1.78(a)(1) and (a)(2) must be met. Similarly, the fact that the corrected Filing Receipt accompanying this decision on petition includes the prior-filed application should not be construed as meaning that applicant is entitled to the claim for benefit of priority to the prior-filed application noted thereon. Accordingly, the examiner will, in due course, consider this benefit claim and determine whether the instant application is entitled to the benefit of the earlier filing date.

A corrected Filing Receipt, which includes the priority claim to the prior-filed PCT application, accompanies this decision on petition.

The matter is being referred to TC AU 3745 for consideration of applicant's entitlement to claim priority to the above-noted, prior filed PCT application.

Telephone inquiries concerning this matter should be directed to Petitions Attorney Cliff Congo at (571)272-3207.

Frances Hicks

Frances Hicks
Petitions Examiner
Office of Petitions

UNITED STATES PATENT AND TRADEMARK OFFICE

Commissioner for Patents
United States Patent and Trademark Office
P.O. Box 1450
Alexandria, VA 22313-1450
www.uspto.gov

E I DU PONT DE NEMOURS AND COMPANY
LEGAL PATENT RECORDS CENTER
BARLEY MILL PLAZA 25/1128
4417 LANCASTER PIKE
WILMINGTON, DE 19805

COPY MAILED

FEB 1 4 2005

OFFICE OF PETITIONS

ON PETITION

In re Application of :
Peter Veenema, et al. :
Application No. 10/670,831 :
Filed: September 25, 2003 :
Attorney Docket No. RD7330USDIV :

This is a decision on the petition under 37 CFR 1.137(b), filed November 24, 2004, to revive the above-identified application.

There is no indication that the person signing the instant petition was ever given a power of attorney or authorization of agent to prosecute the above-identified application. However, in accordance with 37 CFR 1.34(a), the signature of Patricia Smink Rogowski appearing on the petition shall constitute a representation to the United States Patent and Trademark Office that she is authorized to represent the particular party on whose behalf she acts. A courtesy copy of this decision is being mailed to petitioner. However, if Ms. Rogowski desires to receive future correspondence regarding this application, the appropriate power of attorney or authorization of agent must be submitted. All future correspondence regarding this application file will be directed solely to the address of record.

A review of the record discloses that on December 18, 2003, a Notice to File Corrected Application Papers (Notice) was mailed, setting a two (2) month period for reply. The Notice required replacement drawings in compliance with 37 CFR 1.84 and 37 CFR 1.121. Since no response was filed, the application became abandoned after midnight February 18, 2004. A Notice of Abandonment was mailed on November 12, 2004. In response on November 24, 2004, the present petition was filed, including replacement drawings.

37 CFR 1.137(b)(3) requires a statement that the entire delay in filing the required reply from the due date for the reply until the filing of a grantable petition pursuant to 37 CFR 1.137(b) was unintentional. While it is not apparent whether the person signing the statement of unintentional delay was in a position to have firsthand or direct knowledge of the facts and circumstances of the delay at issue, such statement is being treated as having been made as the result of a reasonable inquiry into the facts and circumstances of such delay. See 37 CFR 10.18(b) and Changes to Patent Practice and Procedure; Final Rule Notice, 62 Fed. Reg. 53131, 53178 (October 10, 1997), 1203 Off. Gaz. Pat. Office 63, 103 (October 21, 1997). In the event that such an inquiry has not been made, petitioner must make such an inquiry. If such inquiry results in the discovery that it is not correct that the entire delay in filing the required reply from the due date for the reply until the filing of a grantable petition pursuant to 37 CFR 1.137(b) was unintentional, petitioner must notify the Office.

The petition is GRANTED.

The application is being returned to the Office of Initial Patent Examination (OIPE) for further review of the replacement drawings provided on November 24, 2004.

Telephone inquires related to this decision should be directed to the undersigned at (571) 272-3204. Telephone inquiries related to OIPE processing should be directed to their hotline at (703) 308-1202.

Sherry D. Brinkley
Petitions Examiner
Office of Petitions
Office of the Deputy Commissioner
for Patent Examination Policy

cc: PATRICIA SMIK ROGOWSKI
CONNOLLY BOVE LODGE & HUTZ LLP
1007 NORTH ORANGE STREET
P.O. BOX 2207
WILMINGTON, DE 19899

SPE RESPONSE FOR CERTIFICATE OF CORRECTION

Paper No.: 4/1/2009

DATE : 5/5/2008

TO SPE OF : ART UNIT 3700 (3723)

SUBJECT : Request for Certificate of Correction on Patent No.: 6,921,323

Attn: A. Ojini

A response is requested with respect to the accompanying request for a certificate of correction.

Please complete this form and forward within 7 days to: Scanning customer Support

Send copy also via PTO mail to:
Certificates of Correction Branch – 2900 South Tower 9A39A
Palm location **7580** - Tel. No. 308-8309

With respect to the change(s) requested, correcting Office and/or Applicant's errors, should the patent read as shown in the certificate of correction? No new matter should be introduced, nor should the scope or meaning of the claims be changed.

***Ok to enter changes to claims "apparatus" to --head-- as req. in COCIN?**

Ernest C. White, LIE - 308-9390x122
Certificates of Correction Branch

Thank You For Your Assistance

The request for issuing the above-identified correction(s) is hereby:
Note your decision on the appropriate box.

- ☒ **Approved** — All changes apply.
- ☐ **Approved in Part** — Specify below which changes **do not** apply.
- ☐ **Denied** — State the reasons for denial below.

Comments:

Joseph J. Hail III — Art Unit 3723

UNITED STATES PATENT AND TRADEMARK OFFICE

Commissioner for Patents
United States Patent and Trademark Office
P.O. Box 1450
Alexandria, VA 22313-1450
www.uspto.gov

Paper No.

CATERPILLAR INC.
100 N.E. ADAMS STREET
PATENT DEPT.
PEORIA IL 61629-6490

COPY MAILED

NOV 09 2006

OFFICE OF PETITIONS

In re Application of	:	
Sameer Marathe	:	DECISION ON
Application No. 10/670,857	:	PETITION
Filed: September 25, 2003	:	
Attorney Docket No. 03-106	:	

This is a decision on the "PETITION TO WITHDRAW HOLDING OF ABANDONMENT OF PATENT APPLICATION," filed August 23, 2006.

The petition under §1.181 is **GRANTED**.

The above-identified application became abandoned for failure to timely file a proper reply to the final Office action mailed October 27, 2005. This Office action set a three-month shortened statutory period for reply, with extensions of time obtainable under § 1.136(a). A Notice of Abandonment was mailed on August 1, 2006.

The petition was filed promptly thereafter. Therein, petitioner asserts that after having timely filed a Notice of Appeal in response to the Office action mailed October 27, 2005, and having been mailed a Notice of Panel Decision from Pre-Appeal Brief Review on February 28, 2006, applicant had until August 28, 2006 to file an Appeal Brief[1]. Petitioner states their intention to file such an Appeal Brief with the necessary extension of time within the fifth month. In view thereof,

[1] Citing *Pre-appeal Brief Conference Pilot Program*, 1296 OG 67 (July 12, 2005).

petitioner asserts that the holding of abandonment mailed August 1, 2006, is premature.

Applicant's arguments have been considered and found persuasive. The Notice of Appeal was timely filed on January 10, 2006. Further, as stated by applicant and as indicated in the Notice of Panel Decision from Pre-Appeal Brief Review mailed February 28, 2006, the Notice set a one-month period for reply, with extensions of time obtainable under §1.136(a)[2].

Accordingly, withdrawal of the holding of abandonment is warranted.

It is further noted that applicant's Appeal Brief (and extension of time) was timely filed on August 28, 2006.

In view thereof, the Notice of Abandonment mailed August 1, 2006, is **VACATED**, and the holding of abandonment is hereby **WITHDRAWN**.

No petition fee is required and none has been charged.

The Technology Center AU 3683 has been advised of this decision. The application file is, thereby, forwarded to the Technology Center's technical support staff to withdraw the holding of abandonment and for forwarding to the examiner for consideration of the Appeal Brief filed August 28, 2006.

Telephone inquiries related to this decision should be directed to the undersigned at (571) 272-3219.

Nancy Johnson
Senior Petitions Attorney
Office of Petitions

---

[2] The OG Notice provided that:

the time period for filing an appeal brief will be reset to be one month from mailing of the decision on the request, or the balance of the two-month time period running from the receipt of the notice of appeal, whichever is greater. Further, the time period for filing of the appeal brief is extendible under 37 CFR 1.136 based upon the mail date of the decision on the request or the receipt date of the notice of appeal, as applicable.

UNITED STATES PATENT AND TRADEMARK OFFICE

Commissioner for Patents
United States Patent and Trademark Office
P.O. Box 1450
Alexandria, VA 22313-1450
www.uspto.gov

Paper No.

CATERPILLAR INC.
100 N.E. ADAMS STREET
PATENT DEPT.
PEORIA IL 61629-6490

COPY MAILED
NOV 22 2006
OFFICE OF PETITIONS

In re Application of	:	**RE-MAILED**[1]
Sameer Marathe	:	DECISION ON
Application No. 10/670,857	:	PETITION
Filed: September 25, 2003	:	
Attorney Docket No. 03-106	:	

This is a decision on the "PETITION TO WITHDRAW HOLDING OF ABANDONMENT OF PATENT APPLICATION," filed August 23, 2006.

The petition under §1.181 is **GRANTED**.

The above-identified application became abandoned for failure to timely file a proper reply to the final Office action mailed October 27, 2005. This Office action set a three-month shortened statutory period for reply, with extensions of time obtainable under § 1.136(a). A Notice of Abandonment was mailed on August 1, 2006.

The petition was filed promptly thereafter. Therein, petitioner asserts that after having timely filed a Notice of Appeal in response to the Office action mailed October 27, 2005, and having been mailed a Notice of Panel Decision from Pre-Appeal Brief Review on February 28, 2006, applicant had until August 28, 2006 to file an Appeal Brief[2]. Petitioner states their

---

[1] The undersigned has become aware that there was an error in the mailing of this decision and that it did not reach its intended recipient. Accordingly, the decision is being re-mailed. Given that this is a fully favorable decision, there are no applicable time periods to reset.

[2] Citing *Pre-appeal Brief Conference Pilot Program*, 1296 OG 67 (July 12, 2005).

intention to file such an Appeal Brief with the necessary extension of time within the fifth month. In view thereof, petitioner asserts that the holding of abandonment mailed August 1, 2006, is premature.

Applicant's arguments have been considered and found persuasive. The Notice of Appeal was timely filed on January 10, 2006. Further, as stated by applicant and as indicated in the Notice of Panel Decision from Pre-Appeal Brief Review mailed February 28, 2006, the Notice set a one-month period for reply, with extensions of time obtainable under §1.136(a)[3].

Accordingly, withdrawal of the holding of abandonment is warranted.

It is further noted that applicant's Appeal Brief (and extension of time) was timely filed on August 28, 2006.

In view thereof, the Notice of Abandonment mailed August 1, 2006, is **VACATED**, and the holding of abandonment is hereby **WITHDRAWN**.

No petition fee is required and none has been charged.

The Technology Center AU 3683 has been advised of this decision. The application file is, thereby, forwarded to the Technology Center's technical support staff to withdraw the holding of abandonment and for forwarding to the examiner for consideration of the Appeal Brief filed August 28, 2006.

Telephone inquiries related to this decision should be directed to the undersigned at (571) 272-3219.

Nancy Johnson
Senior Petitions Attorney
Office of Petitions

---

[3] The OG Notice provided that:

the time period for filing an appeal brief will be reset to be one month from mailing of the decision on the request, or the balance of the two-month time period running from the receipt of the notice of appeal, whichever is greater. Further, the time period for filing of the appeal brief is extendible under 37 CFR 1.136 based upon the mail date of the decision on the request or the receipt date of the notice of appeal, as applicable.

UNITED STATES PATENT AND TRADEMARK OFFICE

Commissioner for Patents
United States Patent and Trademark Office
P.O. Box 1450
Alexandria, VA 22313-1450
www.uspto.gov

MONTE & MCGRAW, PC
4092 SKIPPACK PIKE
P.O. BOX 650
SKIPPACK PA 19474

JUN 04 2007

In re Application of:
SCHON, DONALD A. et al
Serial No.: 10/670,861
Filed: Sep. 24, 2003
Docket: MED-0005D1
Title: METHODS OF MAKING A MULTILUMEN CATHETER ASSEMBLY

DECISION ON PETITION TO ENTER AMENDMENT AFTER FINAL

This is a decision on the petition filed on Oct. 31, 2006 to enter the amendment after final under 37 CFR 1.116. The petition is being considered pursuant to 37 CFR 1.181 and no fee therefore is required. The petition fee paid in the amount of $790.00 will be refunded upon request.

The petition is **DISMISSED**.

This application comes before the Technology Center Director for review of prosecution, in particular for review of the office letter (advisory action) of Oct. 23, 2006. Petitioner opines that the examiner's refusal to enter the amendment after final filed on Sep. 28, 2006 was improper because there was no new issue raised in the amendment.

Discussion and Analysis

In response to the amendment after final filed on Sep. 28, 2006, the examiner stated in the advisory action that "Applicant amended independent claims 22 and 35 so as to change its scope and cause further search and consideration after a final rejection was mailed". Petitioner argues that newly amended claims 22 and 35 did not "raise new issues requiring further search" as the advisory action maintains. Petitioner believes that the examiner has already considered such limitation of "thick integral internal septum" presented in the previous amendment filed on May 8, 2006. Therefore, the examiner was wrong in holding such limitations as "new" issue(s) referred to by the advisory action. Petitioner further submits that the subsequent amendment after final provides express details of such a "thick integral internal septum" and thus the issue is not "new".

Review of the application and of the claims shows that on May 8, 2006 an amendment was entered amending claims 22 and 35 containing the language "...thick integral internal septum". This language defines a method of making a multilumen catheter assembly with a process step to form a unitary catheter tube having a distal portion and a distal end portion terminating in a distal end, a proximal portion terminating in a proximal end, and a first lumen and a second lumen separated from each other by a thick integral internal septum. These claims were fully treated in the final office action of Jul. 26, 2006. The proposed after final amendment to claims 22 and 35 submitted by petitioner on Sep. 28, 2006 contained the language "a second lumen initially separated from each other by a thick integral internal septum from one side of the catheter to an opposed other side thereof, the septum being of generally constant thickness in cross-section". This language defines a method of making a multilumen catheter assembly with a process step to form a unitary catheter tube having a distal portion and a distal end portion terminating in a distal end, a proximal portion terminating in a proximal end, and a first lumen and a second lumen separated from each other by a thick integral internal septum from one side of the catheter to an opposed other side and generally with a constant thickness in cross section. Clearly this requirement of a thick integral internal septum "from one side of the catheter to an opposed other side thereof, the septum being of generally constant thickness in cross-section" is new. That petitioner may have intended the claim to read this way prior and is therefore of the opinion that he has not changed the claim scope is not probative. Patent examiners are charged with giving the claims the broadest reasonable interpretation of the claim language in light of the specification and as such claim draftsmanship requires great precision. In the instant application, a method of making a multilumen catheter assembly with a process step to form a unitary catheter tube having a distal portion and a distal end portion terminating in a distal end, a proximal portion terminating in a proximal end, and a first lumen and a second lumen separated from each other by a thick integral internal septum is considered to be of different scope when compared to a method of making a multilumen catheter assembly with a process step to form a unitary catheter tube having a distal portion and a distal end portion terminating in a distal end, a proximal portion terminating in a proximal end, and a first lumen and a second lumen separated from each other by a thick integral internal septum from one side of the catheter to an opposed other side and generally with a constant thickness in cross section.

Entry of amendments after final rejection is not a matter of right (see 37 CFR 1.116). The review of the record shows that the examiner was in compliance with proper examining practice as set forth in MPEP 714.13 in refusing entry of the after final amendment submitted Sep. 28, 2006. The examiner did not abuse his discretion or act in an arbitrary or capricious manner in denying entry of the proposed claims after final for the reasons stated. Therefore there is no basis for granting the relief requested.

Conclusion

For the foregoing reasons, the relief requested by petitioners will not be granted. Specifically, the examiner's refusal in admitting the amendment after final filed Sep. 28, 2006 is proper.

The application is being forwarded to SPE of Art Unit 3761 for further processing. Any request for reconsideration of this decision must be submitted within TWO (2) MONTHS from the mail

date of this decision, 37 CFR 1.181(f). No extension of time under 37 CFR 1.136 (a) is permitted. The reconsideration request should include a cover letter entitled "Renewed Petition under 37 CFR 1.181." Any inquiry regarding this decision should be directed to Henry Yuen, Special Program Examiner, at (571) 272-4856.

The petition is dismissed.

Karen M. Young

for Frederick R. Schmidt, Director
Technology Center 3700

UNITED STATES PATENT AND TRADEMARK OFFICE

Commissioner for Patents
United States Patent and Trademark Office
P.O. Box 1450
Alexandria, VA 22313-1450
www.uspto.gov

ANTON P. NESS
FOX ROTHSCHILD LLP
1250 SOUTH BROAD STREET, SUITE 1000
P.O. BOX 431
LANSDALE PA 19446-0431

COPY MAILED

DEC 27 2007

OFFICE OF PETITIONS

In re Application of	:	
Donald A. Schon et al	:	
Application No. 10/670,861	:	DECISION ON PETITION
Filed: September 24, 2003	:	
Attorney Docket No. MED-0005D1	:	

This is a decision on the petition under 37 CFR 1.137(b), filed June 26, 2007, to revive the above-identified application.

The petition is **GRANTED**.

The application became abandoned for failure to timely reply within the meaning of 37 CFR 1.113 to the final Office action, mailed July 26, 2006, which set a shortened statutory period for reply of three (3) months. A one (1) month extension of time under the provisions of 37 CFR 1.136(a) was obtained. Accordingly, the application became abandoned on November 28, 2006 (November 26, 2006, was a Sunday). A Notice of Abandonment was mailed on April 6, 2007.

The petition satisfies the requirements of 37 CFR 1.137(b) in that petitioner has supplied (1) the required reply in the form of a request for continued examination, $790 filing fee, and submission as required by 37 CFR 1.114, (2) the petition fee of $1,500, and (3) a proper statement of unintentional delay. Accordingly, the failure to timely reply to the final Office action of July 26, 2006 is accepted as being unintentionally delayed.

It is not apparent whether the person signing the statement of unintentional delay was in a position to have firsthand or direct knowledge of the facts and circumstances of the delay at issue. Nevertheless, such statement is being treated as having been made as the result of a reasonable inquiry into the facts and circumstances of such delay. See 37 CFR 10.18(b) and Changes to Patent Practice and Procedure; Final Rule Notice, 62 Fed. Reg. 53131, 53178 (October 10, 1997), 1203 Off. Gaz. Pat. Office 63, 103 (October 21, 1997). In the event that such an inquiry has

not been made, petitioner must make such an inquiry. If such inquiry results in the discovery that it is not correct that the entire delay in filing the required reply from the due date for the reply until the filing of a grantable petition pursuant to 37 CFR 1.137(b) was unintentional, petitioner must notify the Office.

There is no indication that the person signing the petition was ever given a power of attorney to prosecute the application. If the person signing the petition desires to receive future correspondence regarding this application, the appropriate power of attorney document must be submitted. While a courtesy copy of this decision is being mailed to the person signing the petition, all future correspondence will be directed to the address currently of record until appropriate instructions are received.

Telephone inquiries concerning this decision should be directed to the undersigned at (571) 272-3218 or to the Office of Petitions Help Desk at (571) 272-3282 after January 3, 2008.

This application is being referred to Technology Center AU 3761 for processing the request for continued examination and for appropriate action in the normal course of business on the submission under 37 CFR 1.114 received June 26, 2007.

Frances Hicks
Petitions Examiner
Office of Petitions

cc:

Bruce D. George
Blank Rome LLP
One Logan Square
Philadelphia, PA 19103

PTO/SB/66 (03-09)
Approved for use through 03/31/2012. OMB 0651-0016
U.S. Patent and Trademark Office: U.S. DEPARTMENT OF COMMERCE
Under the Paperwork Reduction Act of 1995, no persons are required to respond to a collection of information unless it displays valid OMB control number.

PETITION TO ACCEPT UNINTENTIONALLY DELAYED PAYMENT OF MAINTENANCE FEE IN AN EXPIRED PATENT (37 CFR 1.378(c))

Patent Number	Issue Date (YYYY-MM-DD)	Application Number	Filing Date (YYYY-MM-DD)	Docket Number (if applicable)
6852941	2005-02-08	10670868	2003-09-25	536-0004

CAUTION: Maintenance fee (and surcharge, if any) payment must correctly identify: (1) the patent number and (2) the application number of the actual U.S. application leading to issuance of that patent to ensure the fee(s) is/are associated with the correct patent. 37 CFR 1.366(c) and (d).

SMALL ENTITY
☒ Patentee claims, or has previously claimed, small entity status. See 37 CFR 1.27.

LOSS OF ENTITLEMENT TO SMALL ENTITY STATUS
☐ Patentee is no longer entitled to small entity status. See 37 CFR 1.27(g)

NOT Small Entity		Small Entity	
Fee	Code	Fee	Code
○ 3 ½ year	(1551)	◉ 3 ½ year	(2551)
○ 7 ½ year	(1552)	○ 7 ½ year	(2552)
○ 11 ½ year	(1553)	○ 11 ½ year	(2553)

SURCHARGE
The surcharge required by 37 CFR 1.20(i)(2) (Fee Code 1558) must be paid as a condition of accepting unintentionally delayed payment of the maintenance fee.

MAINTENANCE FEE (37 CFR 1.20(e)-(g))
The appropriate maintenance fee must be submitted with this petition.

STATEMENT
THE UNDERSIGNED CERTIFIES THAT THE DELAY IN PAYMENT OF THE MAINTENANCE FEE TO THIS PATENT WAS UNINTENTIONAL

PETITIONER(S) REQUEST THAT THE DELAYED PAYMENT OF THE MAINTENANCE FEE BE ACCEPTED AND THE PATENT REINSTATED

THIS PORTION MUST BE COMPLETED BY THE SIGNATORY OR SIGNATORIES

37 CFR 1.378(d) states: "Any petition under this section must be signed by an attorney or agent registered to practice before the Patent and Trademark Office, or by the patentee, the assignee, or other party in interest."

I certify, in accordance with 37 CFR 1.4(d)(4) that I am

◉ An attorney or agent registered to practice before the Patent and Trademark Office

○ A sole patentee

○ A joint patentee; I certify that I am authorized to sign this submission on behalf of all the other patentees.

○ A joint patentee; all of whom are signing this e-petition

○ The assignee of record of the entire interest

Patent Practitioner			
A signature of the applicant or representative is required in accordance with 37 CFR 1.33 and 10.18. Please see 37 CFR 1.4(d) for the form of the signature			
Signature	/Daniel H. Sherr/	Date (YYYY-MM-DD)	2009-12-01
Name	Daniel H. Sherr	Registration Number	46425

This collection of information is required by 37 CFR 1.378(c). The information is required to obtain or retain a benefit by the public which is to file (and by the USPTO to process) an application. Confidentiality is governed by 35 U.S.C. 122 and 37 CFR 1.11 and 1.14. This collection is estimated to take 1 hour to complete, including gathering, preparing, and submitting the completed application form to the USPTO. Time will vary depending upon the individual case. Any comments on the amount of time you require to complete this form and/ or suggestions for reducing this burden, should be sent to the Chief Information Officer, U.S. Patent and Trademark Office, U.S. Department of Commerce, P.O. Box 1450, Alexandria, VA 22313-1450. DO NOT SEND FEES OR COMPLETED FORMS TO THIS ADDRESS. **This form can only be used when in conjunction with EFS-Web. If this form is mailed to the USPTO, it may cause delays in reinstating the patent.**

Privacy Act Statement

The Privacy Act of 1974 (P.L. 93-579) requires that you be given certain information in connection with your submission of the attached form related to a patent application or patent. Accordingly, pursuant to the requirements of the Act, please be advised that: (1) the general authority for the collection of this information is 35 U.S.C. 2(b)(2); (2) furnishing of the information solicited is voluntary; and (3) the principal purpose for which the information is used by the U.S. Patent and Trademark Office is to process and/or examine your submission related to a patent application or patent. If you do not furnish the requested information, the U.S. Patent and Trademark Office may not be able to process and/or examine your submission, which may result in termination of proceedings or abandonment of the application or expiration of the patent.

The information provided by you in this form will be subject to the following routine uses:

1. The information on this form will be treated confidentially to the extent allowed under the Freedom of Information Act (5 U.S.C. 552) and the Privacy Act (5 U.S.C. 552a). Records from this system of records may be disclosed to the Department of Justice to determine whether the Freedom of Information Act requires disclosure of these records.

2. A record from this system of records may be disclosed, as a routine use, in the course of presenting evidence to a court, magistrate, or administrative tribunal, including disclosures to opposing counsel in the course of settlement negotiations.

3. A record in this system of records may be disclosed, as a routine use, to a Member of Congress submitting a request involving an individual, to whom the record pertains, when the individual has requested assistance from the Member with respect to the subject matter of the record.

4. A record in this system of records may be disclosed, as a routine use, to a contractor of the Agency having need for the information in order to perform a contract. Recipients of information shall be required to comply with the requirements of the Privacy Act of 1974, as amended, pursuant to 5 U.S.C. 552a(m).

5. A record related to an International Application filed under the Patent Cooperation Treaty in this system of records may be disclosed, as a routine use, to the International Bureau of the World Intellectual Property Organization, pursuant to the Patent Cooperation Treaty.

6. A record in this system of records may be disclosed, as a routine use, to another federal agency for purposes of National Security review (35 U.S.C. 181) and for review pursuant to the Atomic Energy Act (42 U.S.C. 218(c)).

7. A record from this system of records may be disclosed, as a routine use, to the Administrator, General Services, or his/her designee, during an inspection of records conducted by GSA as part of that agency's responsibility to recommend improvements in records management practices and programs, under authority of 44 U.S.C. 2904 and 2906. Such disclosure shall be made in accordance with the GSA regulations governing inspection of records for this purpose, and any other relevant (i.e., GSA or Commerce) directive. Such disclosure shall not be used to make determinations about individuals.

8. A record from this system of records may be disclosed, as a routine use, to the public after either publication of the application pursuant to 35 U.S.C. 122(b) or issuance of a patent pursuant to 35 U.S.C. 151. Further, a record may be disclosed, subject to the limitations of 37 CFR 1.14, as a routine use, to the public if the record was filed in an application which became abandoned or in which the proceedings were terminated and which application is referenced by either a published application, an application open to public inspections or an issued patent.

9. A record from this system of records may be disclosed, as a routine use, to a Federal, State, or local law enforcement agency, if the USPTO becomes aware of a violation or potential violation of law or regulation.

UNITED STATES PATENT AND TRADEMARK OFFICE

Commissioner for Patents
United States Patent and Trademark Office
P.O. Box 1450
Alexandria, VA 22313-1450
www.uspto.gov

In re Patent No. 6852941
Issue Date: February 8,2005
Application No. 10670868
Filed: September 25,2003
Attorney Docket No. 20045/10001

:
:DECISION GRANTING PETITION
:UNDER 37 CFR 1.378(c)
:

This is a decision on the electronic petition, filed December 1,2009 ,under 37 CFR 1.378(c) to accept the unintentionally delayed payment of the 3.5 year maintenance fee for the above-identified patent.

The petition is **GRANTED**.

The maintenance fee is accepted, and the above-identified patent reinstated as of December 1,2009 . This decision also constitutes notice that the fee has been accepted. An electronic copy of the petition and this decision has been created as an entry in the Image File Wrapper. Nevertheless, petitioner should print and retain an independent copy.

Telephone inquiries related to this electronic decision should be directed to the Electronic Business Center at 1-866-217-9197.

UNITED STATES PATENT AND TRADEMARK OFFICE

Commissioner for Patents
United States Patent and Trademark Office
P.O. Box 1450
Alexandria, VA 22313-1450
www.uspto.gov

DAVID J. BREMER
4921 N. DAMEN AVENUE
CHICAGO, IL 60625

COPY MAILED

JUN 0 7 2005

OFFICE OF PETITIONS

In re Application of :
Robert Keith Longino :
Application No. 10/670,874 : ON PETITION
Filed: September 25, 2003 :
Attorney Docket No. LONGINOSKATE :

This is a decision on the renewed petition filed May 16, 2005, which has been treated as a petition under 37 CFR 1.53 requesting that the above-identified application be accorded a filing date of September 25, 2003, including Figures 27a, 27b, 27c, 28-30 described in the specification.

The application was submitted on September 25, 2003. However, on January 11, 2005, the Office of Initial Patent Examination (OIPE) mailed a "Notice of Omitted Items in a Nonprovisional Application," (Notice) that stated the application had been accorded a filing date, and that Figures 27a, 27b, 27c, 28-30 described in the specification, appear to have been omitted.

In response, on February 25, 2005, the original petition and a copy of Figures 27a, 27b, 27c, 28-30 were submitted. A copy of applicant's postcard receipt that acknowledges receipt of "DRAWINGS (16 SHEETS)" on September 25, 2003, accompanied the papers. A review of the application file indicates the presence of only fifteen (15) sheets of drawings originally filed on September 25, 2003, with the sheet that contains Figures 27a, 27b, 27c, 28-30 missing. It is assumed that the missing sheet of drawings containing Figures 27a, 27b, 27c, 28-30 was misplaced by the Office.

In view of the above, the petition is granted.

The $400.00 petition fee will be refunded by treasury check.

This application will be returned to OIPE for processing with a filing date of September 25, 2003, using the sheet of drawings, containing Figures 27a, 27b, 27c, 28-30, that was submitted with the petition on February 25, 2005.

Telephone inquiries concerning this matter may be directed to the undersigned at (571) 272-3228.

Edward J. Tannouse
Petitions Attorney
Office of Petitions/Patent
United States Patent and Trademark Office

UNITED STATES PATENT AND TRADEMARK OFFICE

Commissioner for Patents
United States Patent and Trademark Office
P.O. Box 1450
Alexandria, VA 22313-1450
www.uspto.gov

MAILED

FEB 02 2009

Technology Center 2100

Hunter E. Webb
Hoffman, Warnick & D'Alessandro LLC
75 State Street, 14th Floor
Albany, New York 12207

In re Application of:
William J. Masek et al.
Application No. 10/670,898
Filed: 09/25/2003
Attorney Docket Number: LOT920030024US1
For: METHOD, SYSTEM AND PROGRAM PRODUCT FOR TESTING A SERVER APPLICATION USING A REENTRANT TEST APPLICATION

DECISION ON REQUEST TO WITHDRAWAL HOLDING OF ABANDONMENT

On July 17, 2007 a Notice of Non-Compliance was mailed in response to an RCE filed on July 13, 2007. On January 18, 2008, a Petition to reset the time period for responding to the Notice of Non-compliance was filed. Petitioner alleges that the notice was not received from the office. A supplemental response was filed on July 10, 2008 to correct deficiencies found in the original petition.

As noted in MPEP 711.03: "Under the reasoning of Delgar, an allegation that an Office action was never received may be considered in a petition to withdraw the holding of abandonment. If adequately supported, the Office may grant the petition to withdraw the holding of abandonment and remail the Office action". Therefore the petition to reset the time period for response will be treated as a petition to withdraw a constructive holding of abandonment. As indicated in the original petition, Petitioner has accessed the Notice of Non-Compliance through the PAIR system. Therefore, the Office Action will not be re-mailed. Accompanying the petition is a response correcting deficiencies identified in the Notice.

The petition to withdraw the holding of abandonment is **GRANTED**,

The application is being forwarded to the Examiner with instructions to begin consider the amendment filed January 18, 2008.

Any inquiry concerning this decision should be directed to the undersigned whose telephone number is (571) 272-3591.

/Gail O. Hayes/

Gail O. Hayes
Special Program Examiner/Quality Assurance Specialist
Technology Center 2100
Computer Architecture, Software, and
Information Security

UNITED STATES PATENT AND TRADEMARK OFFICE

UNITED STATES DEPARTMENT OF COMMERCE
United States Patent and Trademark Office
Address: COMMISSIONER FOR PATENTS
P.O. Box 1450
Alexandria, Virginia 22313-1450
www.uspto.gov

APPLICATION NO.	FILING DATE	FIRST NAMED INVENTOR	ATTORNEY DOCKET NO.	CONFIRMATION NO.
10/670,898	09/25/2003	William J. Masek	LOT920030024US1	5987

23550 7590 02/03/2009
HOFFMAN WARNICK LLC
75 STATE STREET
14TH FLOOR
ALBANY, NY 12207

EXAMINER
MITCHELL, JASON D

ART UNIT	PAPER NUMBER
2193	

NOTIFICATION DATE	DELIVERY MODE
02/03/2009	ELECTRONIC

Please find below and/or attached an Office communication concerning this application or proceeding.

The time period for reply, if any, is set in the attached communication.

Notice of the Office communication was sent electronically on above-indicated "Notification Date" to the following e-mail address(es):

PTOCommunications@hoffmanwarnick.com

UNITED STATES PATENT AND TRADEMARK OFFICE

Commissioner for Patents
United States Patent and Trademark Office
P.O. Box 1450
Alexandria, VA 22313-1450
www.uspto.gov

DARBY & DARBY
P.O. BOX 5257
NEW YORK NY 10150-5257

COPY MAILED

MAY 23 2005

OFFICE OF PETITIONS

ON PETITION

In re Application of :
Bunpei Toji et al :
Application No. 10/670,913 :
Filed: September 24, 2003 :
Attorney Docket No. 09634/100L257-US1 :

This is a decision on the petition, filed May 12, 2005, under 37 CFR 1.313(c)(2) to withdraw the above-identified application from issue after payment of the issue fee.

The petition is **GRANTED.**

The above-identified application is withdrawn from issue for consideration of a submission under 37 CFR 1.114 (request for continued examination). See 37 CFR 1.313(c)(2).

Petitioner is advised that the issue fee paid on April 7, 2005 in the above-identified application cannot be refunded. If, however, the above-identified application is again allowed, petitioner may request that it be applied towards the issue fee required by the new Notice of Allowance.[1]

Telephone inquiries should be directed to the undersigned at (571) 272-3208.

The examiner of Technology Center AU 2676 will consider the request for continued examination under 37 CFR 1.114.

Karen Creasy

Karen Creasy
Petitions Examiner
Office of Petitions
Office of the Deputy Commissioner
for Patent Examination Policy

---

[1] The request to apply the issue fee to the new Notice may be satisfied by completing and returning the new Issue Fee Transmittal Form PTOL-85(b), which includes the following language thereon: "Commissioner for Patents is requested to apply the Issue Fee and Publication Fee (if any) or re-apply any previously paid issue fee to the application identified above." Petitioner is advised that, whether a fee is indicated as being due or not, the Issue Fee Transmittal Form **must** be completed and timely submitted to avoid abandonment. Note the language in bold text on the first page of the Notice of Allowance and Fee(s) Due (PTOL-85).

UNITED STATES PATENT AND TRADEMARK OFFICE

COMMISSIONER FOR PATENTS
UNITED STATES PATENT AND TRADEMARK OFFICE
P.O. BOX 1450
ALEXANDRIA, VA 22313-1450
www.uspto.gov

Lisa E. Alexander
Sagres Discovery, Inc.
c/o Chiron Corporation
P.O. Box 8097
Emeryville, CA 94662-8097

COPY MAILED
JUN 23 2006
OFFICE OF PETITIONS

In re Application of	:	
Morris et al.	:	
Application No. 10/670,914	:	
Filed: September 24, 2003	:	ON PETITION
Title of Invention:	:	
NOVEL THERAPEUTIC TARGETS	:	
IN CANCER	:	

This is a decision in response to the Petition under 37 CFR 1.137(b), filed May 19, 2006, to revive the above-identified application.

This Petition is hereby **granted**.

The above-identified application became abandoned for failure to reply in a timely manner to the Notice to Comply With Requirements for Patent Applications Containing Nucleotide Sequence and/or Amino Acid Sequence Disclosures (hereinafter "Notice"), mailed July 8, 2005. The Notice set a two (2) month period for reply from the mail date of the Notice, and also provided for extensions of time under 37 CFR 1.136(a). No reply having been received, the application became abandoned September 9, 2006. A Notice of Abandonment was mailed March 13, 2006.

With the instant petition, Applicant has filed responses to the Notice and completed the requirements of a grantable petition under 37 CFR 1.137(b).

This application is being forwarded to the Office of Initial Patent Examination for continued processing in due course.

Telephone inquiries concerning this matter should be directed to the undersigned at (571) 272-3232.

Derek L. Woods
Attorney
Office of Petitions

UNITED STATES PATENT AND TRADEMARK OFFICE

COMMISSIONER FOR PATENTS
UNITED STATES PATENT AND TRADEMARK OFFICE
P.O. BOX 1450
ALEXANDRIA, VA 22313-1450
www.uspto.gov

MAY 13 2004

ALAN R. THIELE
JENKENS & GILCHRIST
3200 FOUNTAIN PLACE
1445 ROSS AVENUE
Dallas TX 75202-2799

In re Application of	:
Shiyou Li	:
Serial No.: 10/670,930	: STATUS LETTER
Filed: September 25, 2003	:
Attorney Docket No.: 44908-00005	:

This is in response to applicants' attorneys' request, filed May 3, 2004, to withdraw from representation in the above identified application.

37 CFR 10.40 Withdrawal from employment.
(b) Mandatory withdrawal . A practitioner representing a client before the Office shall withdraw from employment if:
(1) The practitioner knows or it is obvious that the client is bringing a legal action, commencing a proceeding before the Office, conducting a defense, or asserting a position in litigation or any proceeding pending before the Office, or is otherwise having steps taken for the client, merely for the purpose of harassing or maliciously injuring any person;
(2) The practitioner knows or it is obvious that the practitioner's continued employment will result in violation of a Disciplinary Rule;
(3) The practitioner's mental or physical condition renders it unreasonably difficult for the practitioner to carry out the employment effectively; or
(4) The practitioner is discharged by the client.
(c) Permissive withdrawal. If paragraph (b) of this section is not applicable, a practitioner may not request permission to withdraw in matters pending before the Office unless such request or such withdrawal is because:
(1) The petitioner's client:
(i) Insists upon presenting a claim or defense that is not warranted under existing law and cannot be supported by good faith argument for an extension, modification, or reversal of existing law;
(ii) Personally seeks to pursue an illegal course of conduct;
(iii) Insists that the practitioner pursue a course of conduct that is illegal or that is prohibited under a Disciplinary Rule;
(iv) By other conduct renders it unreasonably difficult for the practitioner to carry out the employment effectively;
(v) Insists, in a matter not pending before a tribunal, that the practitioner engage in conduct that is contrary to the judgment and advice of the practitioner but not prohibited under the Disciplinary Rule; or
(vi) Has failed to pay one or more bills rendered by the practitioner for an unreasonable period of time or has failed to honor an agreement to pay a retainer in advance of the performance of legal services.
(2) The practitioner's continued employment is likely to result in a violation of a Disciplinary Rule;
(3) The practitioner's inability to work with co-counsel indicates that the best interests of the client likely will be served by withdrawal;
(4) The practitioner's mental or physical condition renders it difficult for the practitioner to carry out the employment effectively;
(5) The practitioner's client knowingly and freely assents to termination of the employment; or

(6) The practitioner believes in good faith, in a proceeding pending before the Office, that the Office will find the existence of other good cause for withdrawal.

Applicants' attorney has provided no reason for withdrawal, as required.

The request to withdraw is **DISMISSED**.

Should there be any questions with regard to this letter please contact William R. Dixon, Jr. by letter addressed to the Director, Technology Center 1600, PO BOX 1450, ALEXANDRIA, VA 22313-1450, or by telephone at 571-272-0519 or by facsimile transmission at Office facsimile number 703-872-9306.

William R. Dixon, Jr.
Special Program Examiner
Technology Center 1600

UNITED STATES PATENT AND TRADEMARK OFFICE

COMMISSIONER FOR PATENTS
UNITED STATES PATENT AND TRADEMARK OFFICE
P.O. BOX 1450
ALEXANDRIA, VA 22313-1450
www.uspto.gov

MAILED

MAR 25 2004

Office of the Director
Group 3600

Davis E. Herron II
PO Box 2778
Kansas City, KS 66110

In re application of
Naomi Kvaternik
Application No. 10/670,931
Filed: September 25, 2003
For: WALKER AND TRAY COMBINATION AND METHOD

DECISION ON PETITION TO MAKE SPECIAL (APPLICANT'S AGE)

This is a decision on the petition submitted on September 25, 2003 under 37 CFR 1.102 (c) to make the above-identified application special under the accelerated examination procedure set forth in MPEP 708.02, Section IV: Applicant's Age. The delay in deciding this petition is regretted.

The petition is **GRANTED**.

An application may be accorded special status upon the filing of a petition providing evidence showing that the applicant is at least 65 years old. Such a showing may be provided by evidence such as a birth certificate or a statement from the applicant.

The evidence submitted with the petition is a statement from Naomi Kvaternik stating that she is at least 65 years of age.

The examiner is directed (1) to make an interference search for possible interfering applications, (2) to promptly examine this application out of turn, and (3) if any interfering application is discovered, to examine such application simultaneously and state in the first official letter of such application that it is being taken out of turn because of a possible interference.

Petitioner is advised that this application will continue to be special, throughout its entire prosecution and pendency, including interference or appeal, if any, only if petitioner makes a prompt ***bona fide*** effort, in response to each Office action, to place the application in condition for allowance, even if it is necessary to conduct an interview with the examiner to accomplish this purpose.

SUMMARY: Petition to Make Special **GRANTED**.

Kenneth J. Dorner
Special Programs Examiner
Technology Center 3600
(703) 308-0866

KJD/cps 3/4/04

UNITED STATES PATENT AND TRADEMARK OFFICE

Commissioner for Patents
United States Patent and Trademark Office
P.O. Box 1450
Alexandria, VA 22313-1450
www.uspto.gov

MAILED

NOV 0 9 2004

Director's Office
Group 3700

HARNESS, DICKEY & PIERCE, P.L.C.
P.O. BOX 828
BLOOMFIELD HILLS, MI 48303

In re application of
Shinji Aoki

Serial Number: 10/670951
Filed: September 25, 2003

NOTICE OF WITHDRAWAL FROM ISSUE UNDER 37 CFR. 1.313

For: **SYSTEM FOR LIMITING AN INCREASE IN THE INSIDE AIR TEMPERATURE OF PASSENGER COMPARTMENT OF VEHICLE**

The above-identified application is withdrawn from issue after payment of the issue fee to reopen prosecution.

The above-identified applicant is hereby withdrawn from issue.

The issue fee is refundable upon written request. If, however, the application is again found allowable, the issue fee can be applied toward payment of the issue fee in the amount identified on the new Notice of Allowance and Issue Fee Due upon written request. This request and any balance due must be received on or before the due date noted in the new Notice of Allowance in order to prevent abandonment of the applicant.

Telephone inquiries should be directed to Ira Lazarus at (703) 308-1935.

The above-identified application is being forwarded to the examiner for prompt appropriate action, including notifying applicant of the new status of this application.

Richard A. Bertsch, Director
Technology Center 3700
(703) 308-0975

rt/ 11/8/04

UNITED STATES PATENT AND TRADEMARK OFFICE

Commissioner for Patents
United States Patent and Trademark Office
Washington, D.C. 20231
www.uspto.gov

HARNESS DICKEY & PIERCE PLC
P O BOX 828
BLOOMFIELD HILLS, MI 48303

COPY MAILED

MAY 2 5 2005

OFFICE OF PETITIONS

In re Application of	:	
Shinji Aoki et al	:	
Application No. 10/670,951	:	NOTICE OF ISSUANCE OF
Filed: September 25, 2003	:	ERRATUM VACATING
Attorney Docket No. 4041J-000776	:	PATENT GRANT

The purpose of this notice is to advise you that the above-identified application was mistakenly indicated to have been granted as U.S. Patent No. 6,830,510 on December 14, 2004.

The record discloses the following:

- A Notice of Allowance and Issue Fee(s) Due was mailed on September 1, 2004 requiring submission of the issue fee on or before December 1, 2004.

- The issue fee payment was timely received on September 28, 2004.

- On November 9, 2004, the Director of Technology Center 3700 withdrew the application from issue under the provisions of 37 CFR 1.313(b) for the purpose of reopening prosecution.

- Subsequent to the mailing of the November 9, 2004 notice withdrawing the application from issue, a patent number of 6,830,510 and an issue date of December 14, 2004, were assigned to the application as a result of the payment of the issue fee on September 28, 2004.

The Group Director has been delegated the authority to withdraw an application from issue, including subsequent to payment of the issue fee. MPEP 1002.02(c), ¶ 18. Thus, this application was properly withdrawn from issue prior to the scheduled issue date of December 14, 2004 by a duly authorized official at the USPTO. Accordingly, a patent did not issue to this application on December 14, 2004. See Harley v. Lehman, 981 F.Supp. 9, 11-12 .2, 44 USPQ2d 1699, 1701-02 .n2 (D.D.C. 1997) and Black Light Power, Inc. v. Rogan, 63 USPQ2d 1534 (CA FC 2002).

In view of the above, the USPTO's publication on December 14, 2004 of a patent document, purporting to be a patent, was in error. Accordingly, the following erratum will be published in the Official Gazette:

> All reference to Patent No. 6,830,510 to Shinji Aoki et al of Japan for SYSTEM FOR LIMITING AN INCREASE IN THE INSIDE AIR TEMPERATURE OF PASSENGER COMPARTMENT OF VEHICLE appearing in the Official Gazette of December 14, 2004 should be deleted since no patent was granted.

This matter is being referred to Technology Center AU 3749 for further action as the nature of the case requires.

Any questions concerning this matter may be directed to Frances Hicks at (571) 272-3218.

Brian Hearn,
for Charles Pearson
Director
Office of Petitions

cc: Paul Harrison; Crystal Park 3, Suite 441 (FAX-703-306-2737)
Deneise Boyd, Crystal Park 2, Suite 1100 (FAX-308-5413)
Mary Louise McAskill, Crystal Park 3-910 (FAX 305-4372)
Niomi Farmer, Crystal Park 3-910 (FAX-305-4372)
Mary E. Johnson (Cookie), P/OCS, CM1-6D07
Duane Davis (CDS), CM1-6A07
Tamara K. Greene, PK3-910

SPE RESPONSE FOR CERTIFICATE OF CORRECTION

Paper No.: _____

DATE : 1/21/05

TO SPE OF : ART UNIT 1625

SUBJECT : Request for Certificate of Correction on Patent No.: 6,818,650 10/670,957

A response is requested with respect to the accompanying request for a certificate of correction.

Please complete this form and return with file, within 7 days to:
Certificates of Correction Branch - PK 3-915
Palm location **7580** - Tel. No. 305-8309

With respect to the change(s) requested, correcting Office and/or Applicant's errors, should the patent read as shown in the certificate of correction? No new matter should be introduced, nor should the scope or meaning of the claims be changed.

Thank You For Your Assistance

Certificates of Correction Branch

The request for issuing the above-identified correction(s) is hereby:
Note your decision on the appropriate box.

- ☒ **Approved** — All changes apply.
- ☐ **Approved in Part** — Specify below which changes **do not** apply.
- ☐ **Denied** — State the reasons for denial below.

Comments:

These changes do not introduce new matter & furthermore, do not change the scope or meaning of claims

C. S. Auleck
CHARANJIT S. AULAKH
(PRIMARY EXAMINER)

Cecilia Tsay
SPE

1625
Art Unit

UNITED STATES PATENT AND TRADEMARK OFFICE

Commissioner for Patents
United States Patent and Trademark Office
P.O. Box 1450
Alexandria, VA 22313-1450
www.uspto.gov

MOLECULAR IMPRINTS
PO BOX 81536
AUSTIN TX 78708-1536

COPY MAILED

OCT 0 2 2006

OFFICE OF PETITIONS

In re Application of	:	DECISION ON
Sreenivasan et al.	:	
Application No.: 10/670,980	:	
Filing Date: September 25, 2003	:	PETITION UNDER
Docket No.: P100/MII-49-31-03	:	
For: Imprint Lithography Template	:	37 CFR 1.137(b)
Having Opaque Alignment Marks	:	

This is a decision on Petition Under 37 CFR 1.137(b), filed on July 14, 2006.

The petition is **GRANTED**.

The above-identified application became abandoned for failure to submit the issue fee in a timely manner, in reply to the Notice of Allowance mailed September 27, 2005, which set a statutory period for reply of three (3) months. Accordingly, the above-identified application became abandoned at midnight on December 27, 2005. A Notice of Abandonment was mailed on February 27, 2006.

Petitioner has met the requirements for revival under 37 CFR 1.137(b). Petitioner has submitted the reply in the form of the Issue Fee and Publication Fee (if required), paid the petition fee and made the required statement of unintentional delay. No Terminal Disclaimer is required since this application was filed after June 8, 1995. Accordingly, the Issue Fee payment is accepted as having been unintentionally delayed.

This application is being referred to the Publishing Division.

George Dombroske
PCT Legal Examiner
Office of PCT Legal Administration
on behalf of
Office of Petitions

Telephone: 571-272-3283
Facsimile: 571-273-0459

UNITED STATES PATENT AND TRADEMARK OFFICE

Commissioner for Patents
United States Patent and Trademark Office
P.O. Box 1450
Alexandria, VA 22313-1450
www.uspto.gov

KNOBBE MARTENS OLSON & BEAR LLP
2040 MAIN STREET
FOURTEENTH FLOOR
IRVINE CA 92614

COPY MAILED

JUL 2 6 2004

OFFICE OF PETITIONS

In re Application of	:
Boris Belyi et al.	:
Application No. 10/671,000	: DECISION REFUSING STATUS
Filed: September 25, 2003	: UNDER 37 CFR 1.47(b)
Attorney Docket No. 1DATA.043A	:

This is decision on the petition filed under 37 CFR 1.47(b) on June 21, 2004.

The petition is **DISMISSED**.

Rule 47 applicant is given TWO MONTHS from the mailing date of this decision to reply, correcting the below-noted deficiencies. Any reply should be entitled "Request for Reconsideration of Petition Under 37 CFR 1.47(b)," and should only address the deficiencies noted below, except that the reply may include an oath or declaration executed by the non-signing inventor. **FAILURE TO RESPOND WILL RESULT IN ABANDONMENT OF THE APPLICATION**. Extensions of time may be obtained in accordance with 37 CFR 1.136(a).

The above-identified application was filed September 25, 2003, without an executed oath or declaration.

Accordingly, on December 19, 2003, a "Notice To File Missing Parts of Nonprovisional Application" was mailed, requiring an executed oath or declaration and a surcharge for the late filing of the oath or declaration.

In response, on June 21, 2004, the present petition was filed, accompanied by the late filing surcharge, and a four (4) month request for extension of time.

A grantable petition under 37 CFR 1.47(b) requires:

(1) proof that the non-signing inventor cannot be reached or refuses to sign the oath or declaration after having been presented with the application papers (specification, claims and drawings);

(2) an acceptable oath or declaration in compliance with 35 U.S.C. §§ 115 and 116;

(3) the petition fee;

(4) a statement of the last known address of the non-signing inventor;

(5) proof of proprietary interest, and

(6) proof of irreparable damage.

The petition lacks items(2), (5) and (6). In regards to item (2), an oath or declaration for the patent application in compliance with 37 CFR 1.63 and 1.64 has not been presented. A declaration in compliance with 37 CFR 1.63, 1.64, and 1.67 must be presented, signed by all of the signing inventors, if any. If no inventor(s) will sign the declaration, the declaration may be signed on behalf of the inventor by an assignee. The oath or declaration must be signed by an officer of the corporation (president, vice president, secretary, or treasurer) on behalf of and as agent for the non-signing inventor(s). The office must identify his/her title in the declaration, as well as his/her mailing address, residence, if the applicant lives at a different location from where he or she customarily receives mail, as well as the citizenship of individual signing on behalf of the non-signing inventor. If the oath or declaration is not signed by an officer of the corporation, then proof of authority of the person signing on behalf of the corporation must be submitted.[1]

In regards to item (5), petitioner must provide proof that the Rule 1.47(b) applicant has sufficient proprietary interest in the subject matter to justify the filing of the application.[2] Petitioners should provide a copy of the employment agreement between the non-signing inventors and the Rule 1.47(b) applicant (company); a copy of an assignment agreement showing that the invention disclosed in the application is assigned to the Rule 1.47(b) applicant; or a legal memorandum signed by an attorney familiar with the law of the jurisdiction stating that a court of competent jurisdiction would by the weight of authority in that jurisdiction award the title of the invention to the Rule 1.47(b) applicant.

In regards to item (6), petitioner must provide proof of irreparable damages in accordance with MPEP 409.03(g).

Further correspondence with respect to this matter should be addressed as follows:

By mail: Mail Stop Petition
Commissioner for Patents
P.O. Box 1450
Alexandria, VA 22313-1450

By FAX: (703) 872-9306
Office of Petitions

Telephone inquiries concerning this matter may be directed to the undersigned Petitions Attorney at (703) 305-4497. Please note, effective September 28, 2004, the phone number to reach the Office of Petitions will change to (517) 272-3282.

Patricia Faison-Ball

Patricia Faison-Ball
Senior Petitions Attorney
Office of Petitions

---

[1] MPEP 409.03(b).

[2] MPEP 409.03(f).

UNITED STATES PATENT AND TRADEMARK OFFICE

Commissioner for Patents
United States Patent and Trademark Office
P.O. Box 1450
Alexandria, VA 22313-1450
www.uspto.gov

KNOBBE MARTENS OLSON & BEAR LLP
2040 MAIN STREET
FOURTEENTH FLOOR
IRVINE CA 92614

COPY MAILED

OCT 28 2004

OFFICE OF PETITIONS

In re Application of
Boris Belyi et al.
Application No. 10/671,000
Filed: September 25, 2003
Attorney Docket No. 1DATA.043A

: DECISION REFUSING STATUS
: UNDER 37 CFR 1.47(b)

This is a decision on the renewed petition filed under 37 CFR 1.47(b) on September 30, 2004.

The renewed petition is **DISMISSED**.

Rule 47 applicant is given TWO MONTHS from the mailing date of this decision to reply, correcting the below-noted deficiencies. Any reply should be entitled "Request for Reconsideration of Petition Under 37 CFR 1.47(b)," and should only address the deficiencies noted below, except that the reply may include an oath or declaration executed by the non-signing inventor. **FAILURE TO RESPOND WILL RESULT IN ABANDONMENT OF THE APPLICATION**. Extensions of time may be obtained in accordance with 37 CFR 1.136(a).

The above-identified application was filed September 25, 2003, without an executed oath or declaration. Accordingly, on December 19, 2003, a "Notice To File Missing Parts of Nonprovisional Application" was mailed, requiring an executed oath or declaration and a surcharge for the late filing of the oath or declaration. On June 21, 2004 a petition under 37 CFR 1.47(b) was filed and dismissed in a decision mailed July 26, 2004 because the petition lacked items 2, 5 and 6 of 37 CFR 1.47(b)[1]. An oath or declaration executed by Ken Algiene on behalf of First Data Corporation, proof of proprietary interest and of irreparable harm have been submitted with the instant

[1]A grantable petition under 37 CFR 1.47(b) requires:
(1) proof that the non-signing inventor cannot be reached or refuses to sign the oath or declaration after having been presented with the application papers (specification, claims and drawings);
(2) an acceptable oath or declaration in compliance with 35 U.S.C. §§ 115 and 116;
(3) the petition fee;
(4) a statement of the last known address of the non-signing inventor;
(5) proof of proprietary interest, and
(6) proof of irreparable damage.

petition but, the renewed petition still lacks item (2).

The declaration filed September 30, 2004 is defective in that it does not state that the person(s) making the oath or declaration acknowledges the duty to disclose to the Office all information known to the person(s) to be material to patentability as defined in 37 CFR 1.56 nor does it comply with 37 CFR 3.73 in that the putative assignee has not established its right to take action in accordance with 37 CFR 3.73(b). Specifically, petitioners have not provided documentary evidence of a chain of title from the original owner to the assignee, nor shown that documentary evidence of a chain of title from the original owner to the assignee is recorded in the assignment records of the Office (*i.e.* reel and frame number). Petitioners must establish the right of an assignee to take action in accordance with 37 CFR 3.73(b).

Further correspondence with respect to this matter should be addressed as follows:

By mail: Mail Stop Petition
Commissioner for Patents
P.O. Box 1450
Alexandria, VA 22313-1450

By FAX: (703) 872-9306
Office of Petitions

Telephone inquiries concerning this matter may be directed to the undersigned Petitions Attorney at (517) 272-3212.

Patricia Faison-Ball

Patricia Faison-Ball
Senior Petitions Attorney
Office of Petitions

UNITED STATES PATENT AND TRADEMARK OFFICE

Commissioner for Patents
United States Patent and Trademark Office
P.O. Box 1450
Alexandria, VA 22313-1450
www.uspto.gov

KNOBBE MARTENS OLSON & BEAR LLP
2040 MAIN STREET
FOURTEENTH FLOOR
IRVINE CA 92614

FAX RECEIVED
MAY 25 2005
OFFICE OF PETITIONS

In re Application of
Boris Belyi et al.
Application No. 10/671,000
Filed: September 25, 2003
Attorney Docket No. 1DATA.043A

: DECISION ACCORDING STATUS
: UNDER 37 CFR 1.47(b)

This is a decision on the second renewed petition filed under 37 CFR 1.47(b) on April 25, 2005.

The second renewed petition is **GRANTED**.

The above-identified application was filed September 25, 2003, without an executed oath or declaration. Accordingly, on December 19, 2003, a "Notice To File Missing Parts of Nonprovisional Application" was mailed, requiring an executed oath or declaration and a surcharge for the late filing of the oath or declaration. On June 21, 2004 a petition under 37 CFR 1.47(b) was filed and dismissed in a decision mailed July 26, 2004 because the petition lacked items 2, 5 and 6 of 37 CFR 1.47(b)[1]. An oath or declaration executed by Ken Algiene on behalf of First Data Corporation, proof of proprietary interest and of irreparable harm had been submitted with the renewed petition filed September 30, 2004 but the renewed petition was again dismissed in a decision mailed October 28, 2004 because the declaration filed September 30, 2004 was defective. The oath or declaration submitted did not state that the person(s) making the oath or declaration acknowledged the duty to disclose to the Office all information known to the person(s) to be material to patentability as defined in 37 CFR 1.56 nor did it comply with 37 CFR 3.73 in that the putative assignee had not established its right to take action in accordance with 37 CFR 3.73(b).

---

[1]A grantable petition under 37 CFR 1.47(b) requires:
(1) proof that the non-signing inventor cannot be reached or refuses to sign the oath or declaration after having been presented with the application papers (specification, claims and drawings);
(2) an acceptable oath or declaration in compliance with 35 U.S.C. §§ 115 and 116;
(3) the petition fee;
(4) a statement of the last known address of the non-signing inventor;
(5) proof of proprietary interest, and
(6) proof of irreparable damage.

The decision of October 28, 2004 advised that neither documentary evidence of a chain of title from the original owner to the assignee, or evidence of a chain of title from the original owner to the assignee had been recorded in the assignment records of the Office (*i.e.* reel and frame number).

In response to the decisions dismissing the petitions filed June 21, 2004 and September 30, 2004, proof of proprietary interest vested in First Data Corporation, proof of irreparable damage and an oath or declaration executed by one with the authority to sign on behalf of the assignee, Ken Algiene, Vice President and Assistant Secretary, First Data Corporation, has been provided. In view thereof, Mr. Algiene has also demonstrated his authority and the need to sign the oath or declaration on behalf of the non-signing inventors, Boris Belyi and Sharat Shankar.

All requirements under 37 CFR 1.47(b) therefore having been met, as provided in Rule 1.47(c), this Office will forward notice of this application's filing to the non-signing inventor at the address given in the petition. Notice of the filing of this application will also be published in the Official Gazette.

This matter will be referred to Technology Center 3624 for examination in due course.

Telephone inquiries concerning this matter may be directed to the undersigned Petitions Attorney at (517) 272-3212.

Patricia Faison-Ball

Patricia Faison-Ball
Senior Petitions Attorney
Office of Petitions

UNITED STATES PATENT AND TRADEMARK OFFICE

Commissioner for Patents
United States Patent and Trademark Office
P.O. Box 1450
Alexandria, VA 22313-1450
www.uspto.gov

BORIS BELYI
5749 BRAESVALLEY DRIVE
HOUSTON, TX 77096

SHARAT SHANKAR
10744 MIDDLEBURY WAY
LITTLETON, CO 80126

FAX RECEIVED

MAY 25 2005

OFFICE OF PETITIONS

In re Application of
Boris Belyi et al.
Application No. 10/671,00
Filed: September 25, 2003
For: DATA VALIDATION SYSTEMS AND METHODS FOR USE IN FINANCIAL TRANSACTIONS

Dear Mr. Belyi and Mr. Shankar:

You are named as a joint inventor in the above identified United States patent application, filed under the provisions of 35 U.S.C. 116 (United States Code), and 37 CFR 1.47(a), Rules of Practice in Patent Cases. Should a patent be granted on the application you will be designated therein as a joint inventor.

As a named inventor you are entitled to inspect any paper in the file wrapper of the application, order copies of all or any part thereof (at a prepaid cost per 37 CFR 1.19) or make your position of record in the application. Alternatively, you may arrange to do any of the preceding through a registered patent attorney or agent presenting written authorization from you. If you care to join the application, counsel of record (see below) would presumably assist you. Joining in the application would entail the filing of an appropriate oath or declaration by you pursuant to 37 CFR 1.63.

Telephone inquiries regarding this communication should be directed to the undersigned Petitions Attorney at (571) 272-3212. Requests for information regarding your application should be directed to the File Information Unit at 703/308-2733. Information regarding how to pay for and order a copy of the application, or a specific paper in the application, should be directed to Certification Division at 703/308-9726 or 1-800-972-6382 (outside the Washington D.C. area).

Patricia Faison-Ball

Patricia Faison-Ball
Senior Petitions Attorney
Office of Petitions

cc:
KNOBBE MARTENS OLSON & BEAR LLP
2040 MAIN STREET
FOURTEENTH FLOOR
IRVINE CA 92614

UNITED STATES PATENT AND TRADEMARK OFFICE

Commissioner for Patents
United States Patent and Trademark Office
P.O. Box 1450
Alexandria, VA 22313-1450
www.uspto.gov

KNOBBE MARTENS OLSON & BEAR LLP
2040 MAIN STREET
FOURTEENTH FLOOR
IRVINE CA 92614

COPY MAILED

JUL 2 6 2004

OFFICE OF PETITIONS

In re Application of
Boris Belyi et al.
Application No. 10/671,001
Filed: September 25, 2003
Attorney Docket No. 1DATA.095A

: DECISION REFUSING STATUS
: UNDER 37 CFR 1.47(b)

This is decision on the petition filed under 37 CFR 1.47(b) on June 21, 2004.

The petition is **DISMISSED**.

Rule 47 applicant is given TWO MONTHS from the mailing date of this decision to reply, correcting the below-noted deficiencies. Any reply should be entitled "Request for Reconsideration of Petition Under 37 CFR 1.47(b)," and should only address the deficiencies noted below, except that the reply may include an oath or declaration executed by the non-signing inventor. **FAILURE TO RESPOND WILL RESULT IN ABANDONMENT OF THE APPLICATION**. Extensions of time may be obtained in accordance with 37 CFR 1.136(a).

The above-identified application was filed September 25, 2003, without an executed oath or declaration.

Accordingly, on December 19, 2003, a "Notice To File Missing Parts of Nonprovisional Application" was mailed, requiring an executed oath or declaration and a surcharge for the late filing of the oath or declaration.

In response, on June 21, 2004, the present petition was filed, accompanied by the late filing surcharge, and a four (4) month request for extension of time.

A grantable petition under 37 CFR 1.47(b) requires:

(1) proof that the non-signing inventor cannot be reached or refuses to sign the oath or declaration after having been presented with the application papers (specification, claims and drawings);

(2) an acceptable oath or declaration in compliance with 35 U.S.C. §§ 115 and 116;

(3) the petition fee;

(4) a statement of the last known address of the non-signing inventor;

(5) proof of proprietary interest, and

(6) proof of irreparable damage.

The petition lacks items(2), (5) and (6). In regards to item (2), an oath or declaration for the patent application in compliance with 37 CFR 1.63 and 1.64 has not been presented. A declaration in compliance with 37 CFR 1.63, 1.64, and 1.67 must be presented, signed by all of the signing inventors, if any. If no inventor(s) will sign the declaration, the declaration may be signed on behalf of the inventor by an assignee. The oath or declaration must be signed by an officer of the corporation (president, vice president, secretary, or treasurer) on behalf of and as agent for the non-signing inventor(s). The office must identify his/her title in the declaration, as well as his/her mailing address, residence, if the applicant lives at a different location from where he or she customarily receives mail, as well as the citizenship of individual signing on behalf of the non-signing inventor. If the oath or declaration is not signed by an officer of the corporation, then proof of authority of the person signing on behalf of the corporation must be submitted.[1]

In regards to item (5), petitioner must provide proof that the Rule 1.47(b) applicant has sufficient proprietary interest in the subject matter to justify the filing of the application.[2] Petitioners should provide a copy of the employment agreement between the non-signing inventors and the Rule 1.47(b) applicant (company); a copy of an assignment agreement showing that the invention disclosed in the application is assigned to the Rule 1.47(b) applicant; or a legal memorandum signed by an attorney familiar with the law of the jurisdiction stating that a court of competent jurisdiction would by the weight of authority in that jurisdiction award the title of the invention to the Rule 1.47(b) applicant.

In regards to item (6), petitioner must provide proof of irreparable damages in accordance with MPEP 409.03(g).

Further correspondence with respect to this matter should be addressed as follows:

By mail: Mail Stop Petition
Commissioner for Patents
P.O. Box 1450
Alexandria, VA 22313-1450

By FAX: (703) 872-9306
Office of Petitions

Telephone inquiries concerning this matter may be directed to the undersigned Petitions Attorney at (703) 305-4497. Please note, effective September 28, 2004, the phone number to reach the Office of Petitions will change to (517) 272-3282.

Patricia Faison-Ball

Patricia Faison-Ball
Senior Petitions Attorney
Office of Petitions

---

[1] MPEP 409.03(b).

[2] MPEP 409.03(f).

UNITED STATES PATENT AND TRADEMARK OFFICE

Commissioner for Patents
United States Patent and Trademark Office
P.O. Box 1450
Alexandria, VA 22313-1450
www.uspto.gov

KNOBBE MARTENS OLSON & BEAR LLP
2040 MAIN STREET
FOURTEENTH FLOOR
IRVINE CA 92614

COPY MAILED

NOV 0 2 2004

OFFICE OF PETITIONS

In re Application of	:
Boris Belyi et al.	:
Application No. 10/671,001	: DECISION REFUSING STATUS
Filed: September 25, 2003	: UNDER 37 CFR 1.47(b)
Attorney Docket No. 1DATA.095A	:

This is a decision on the renewed petition filed under 37 CFR 1.47(b) on September 30, 2004 (certificate of a mail date September 27, 2004).

The renewed petition is **DISMISSED**.

Rule 47 applicant is given TWO MONTHS from the mailing date of this decision to reply, correcting the below-noted deficiencies. Any reply should be entitled "Request for Reconsideration of Petition Under 37 CFR 1.47(b)," and should only address the deficiencies noted below, except that the reply may include an oath or declaration executed by the non-signing inventor. **FAILURE TO RESPOND WILL RESULT IN ABANDONMENT OF THE APPLICATION**. Extensions of time may be obtained in accordance with 37 CFR 1.136(a).

The above-identified application was filed September 25, 2003, without an executed oath or declaration. Accordingly, on December 19, 2003, a "Notice To File Missing Parts of Nonprovisional Application" was mailed, requiring an executed oath or declaration and a surcharge for the late filing of the oath or declaration. On June 21, 2004 a petition under 37 CFR 1.47(b) was filed and dismissed in a decision mailed July 26, 2004 because the petition lacked items 2, 5 and 6 of 37 CFR 1.47(b)[1]. An oath or declaration executed by Ken Algiene on behalf of First Data Corporation, proof of proprietary interest and of irreparable harm have been submitted with the instant

[1]A grantable petition under 37 CFR 1.47(b) requires:
(1) proof that the non-signing inventor cannot be reached or refuses to sign the oath or declaration after having been presented with the application papers (specification, claims and drawings);
(2) an acceptable oath or declaration in compliance with 35 U.S.C. §§ 115 and 116;
(3) the petition fee;
(4) a statement of the last known address of the non-signing inventor;
(5) proof of proprietary interest, and
(6) proof of irreparable damage.

petition but, the renewed petition still lacks item (2).

The declaration filed September 30, 2004 is defective in that it does not state that the person(s) making the oath or declaration acknowledges the duty to disclose to the Office all information known to the person(s) to be material to patentability as defined in 37 CFR 1.56 nor does it comply with 37 CFR 3.73 in that the putative assignee has not established its right to take action in accordance with 37 CFR 3.73(b). Specifically, petitioners have not provided documentary evidence of a chain of title from the original owner to the assignee, nor shown that documentary evidence of a chain of title from the original owner to the assignee is recorded in the assignment records of the Office (*i.e.* reel and frame number). Petitioners must establish the right of an assignee to take action in accordance with 37 CFR 3.73(b).

Further correspondence with respect to this matter should be addressed as follows:

By mail: Mail Stop Petition
Commissioner for Patents
P.O. Box 1450
Alexandria, VA 22313-1450

By FAX: (703) 872-9306
Office of Petitions

Telephone inquiries concerning this matter may be directed to the undersigned Petitions Attorney at (517) 272-3212.

Patricia Faison-Ball

Patricia Faison-Ball
Senior Petitions Attorney
Office of Petitions

UNITED STATES PATENT AND TRADEMARK OFFICE

Commissioner for Patents
United States Patent and Trademark Office
P.O. Box 1450
Alexandria, VA 22313-1450
www.uspto.gov

KNOBBE MARTENS OLSON & BEAR LLP
2040 MAIN STREET
FOURTEENTH FLOOR
IRVINE CA 92614

COPY MAILED

MAY 03 2005

OFFICE OF PETITIONS

In re Application of
Boris Belyi et al.
Application No. 10/671,001
Filed: September 25, 2003
Attorney Docket No. 1DATA.095A

: DECISION ACCORDING STATUS
: UNDER 37 CFR 1.47(b)

This is a decision on the second renewed petition filed under 37 CFR 1.47(b) on April 22, 2005.

The second renewed petition is **GRANTED**.

The above-identified application was filed September 25, 2003, without an executed oath or declaration. Accordingly, on December 19, 2003, a "Notice To File Missing Parts of Nonprovisional Application" was mailed, requiring an executed oath or declaration and a surcharge for the late filing of the oath or declaration. On June 21, 2004 a petition under 37 CFR 1.47(b) was filed and dismissed in a decision mailed July 26, 2004 because the petition lacked items 2, 5 and 6 of 37 CFR 1.47(b)[1]. An oath or declaration executed by Ken Algiene on behalf of First Data Corporation, proof of proprietary interest and of irreparable harm had been submitted with the renewed petition filed September 30, 2004 but the renewed petition was again dismissed in a decision mailed November 2, 2004 because the declaration filed September 30, 2004 was defective. The oath or declaration submitted did not state that the person(s) making the oath or declaration acknowledged the duty to disclose to the Office all information known to the person(s) to be material to patentability as defined in 37 CFR 1.56 nor did it comply with 37 CFR 3.73 in that the putative assignee had not established its right to take action in accordance with 37 CFR 3.73(b).

---

[1]A grantable petition under 37 CFR 1.47(b) requires:
(1) proof that the non-signing inventor cannot be reached or refuses to sign the oath or declaration after having been presented with the application papers (specification, claims and drawings);
(2) an acceptable oath or declaration in compliance with 35 U.S.C. §§ 115 and 116;
(3) the petition fee;
(4) a statement of the last known address of the non-signing inventor;
(5) proof of proprietary interest, and
(6) proof of irreparable damage.

The decision of November 2, 2004 advised that neither documentary evidence of a chain of title from the original owner to the assignee, or evidence of a chain of title from the original owner to the assignee had been recorded in the assignment records of the Office (*i.e.* reel and frame number).

In response to the decisions dismissing the petitions filed June 21, 2004 and September 30, 2004, proof of proprietary interest vested in First Data Corporation, proof of irreparable damage and an oath or declaration executed by one with the authority to sign on behalf of the assignee, Ken Algiene, Vice President and Assistant Secretary, First Data Corporation, has been provided. In view thereof, Mr. Algiene has also demonstrated his authority and the need to sign the oath or declaration on behalf of the non-signing inventors, Boris Belyi and Sharat Shankar.

All requirements under 37 CFR 1.47(b) therefore having been met, as provided in Rule 1.47(c), this Office will forward notice of this application's filing to the non-signing inventor at the address given in the petition. Notice of the filing of this application will also be published in the Official Gazette.

This matter will be referred to Technology Center 3624 for examination in due course.

Telephone inquiries concerning this matter may be directed to the undersigned Petitions Attorney at (517) 272-3212.

Patricia Faison-Ball

Patricia Faison-Ball
Senior Petitions Attorney
Office of Petitions

UNITED STATES PATENT AND TRADEMARK OFFICE

Commissioner for Patents
United States Patent and Trademark Office
P.O. Box 1450
Alexandria, VA 22313-1450
www.uspto.gov

BORIS BELYI
5749 BRAESVALLEY DRIVE
HOUSTON, TX 77096

SHARAT SHANKAR
10744 MIDDLEBURY WAY
LITTLETON, CO 80126

COPY MAILED

MAY 03 2005

OFFICE OF PETITIONS

In re Application of
Boris Belyi et al.
Application No. 10/671,001
Filed: September 25, 2003
For: DATA VALIDATION SYSTEMS AND METHODS FOR FINANCIAL TRANSACTIONS

Dear Mr. Belyi and Mr. Shankar:

You are named as a joint inventor in the above identified United States patent application, filed under the provisions of 35 U.S.C. 116 (United States Code), and 37 CFR 1.47(a), Rules of Practice in Patent Cases. Should a patent be granted on the application you will be designated therein as a joint inventor.

As a named inventor you are entitled to inspect any paper in the file wrapper of the application, order copies of all or any part thereof (at a prepaid cost per 37 CFR 1.19) or make your position of record in the application. Alternatively, you may arrange to do any of the preceding through a registered patent attorney or agent presenting written authorization from you. If you care to join the application, counsel of record (see below) would presumably assist you. Joining in the application would entail the filing of an appropriate oath or declaration by you pursuant to 37 CFR 1.63.

Telephone inquiries regarding this communication should be directed to the undersigned Petitions Attorney at (571) 272-3212. Requests for information regarding your application should be directed to the File Information Unit at 703/308-2733. Information regarding how to pay for and order a copy of the application, or a specific paper in the application, should be directed to Certification Division at 703/308-9726 or 1-800-972-6382 (outside the Washington D.C. area).

Patricia Faison-Ball
Senior Petitions Attorney
Office of Petitions

cc:
KNOBBE MARTENS OLSON & BEAR LLP
2040 MAIN STREET
FOURTEENTH FLOOR
IRVINE CA 92614

UNITED STATES PATENT AND TRADEMARK OFFICE

UNITED STATES DEPARTMENT OF COMMERCE
United States Patent and Trademark Office
Address: COMMISSIONER FOR PATENTS
P.O. Box 1450
Alexandria, Virginia 22313-1450
www.uspto.gov

CHRISTENSEN, O'CONNOR, JOHNSON, KINDNESS, PLLC
1420 FIFTH AVENUE
SUITE 2800
SEATTLE, WA 98101-2347

Mail Date: 04/21/2010

Applicant	: Wendy H. Raskind	: DECISION ON REQUEST FOR
Patent Number	: 7655401	: RECALCULATION of PATENT
Issue Date	: 02/02/2010	: TERM ADJUSTMENT IN VIEW
Appliction No	: 10/671,007	: OF WYETH AND NOTICE OF INTENT TO
Filed	: 09/25/2003	: ISSUE CERTIFICATE OF CORRECTION
		:

The Request for Recalculation is **GRANTED** to the extent indicated.

The patent term adjustment has been determined to be **988** days. The USPTO will *sua sponte* issue a certificate of correction reflecting the amount of PTA days determined by the recalculation.

Prior to the issuance of the certificate of correction, the USPTO will afford patentee an opportunity to be heard and request reconsideration. Accordingly, patentee has **one month or thirty (30) days**, whichever is longer, to file a request for reconsideration of this patent term adjustment calculation. See 35 U.S.C. 154(b)(3)(B)(ii) and 37 CFR 1.322(a)(4). No extensions of time will be granted under 37 CFR 1.136.

Patentee should use document code PET.OP if electronically filing a request for reconsideration of this patent term adjustment calculation. The patentee must also include the information required by 37 CFR 1.705(b)(2) and the fee required by 37 CFR 1.18(e). If patentee does not file a timely request for reconsideration of this patent term adjustment calculation including the information required by 37 CFR 1.705(b)(2) and the fee required by 37 CFR 1.18(e), the USPTO will issue a certificate of correction reflecting the PTA determination noted above.

Patentee should be aware that in order to preserve the right to review in the United States District Court for the District of Columbia of the USPTO patent term adjustment determination, patentee must ensure that he or she also take the steps required under 35 U.S.C. 154(b)(4)(A) in a timely manner. Nothing in the request for recalculation should be construed as providing an alternative time frame for commencing a civil action under 35 U.S.C. 154(b)(4)(A).

Any questions concerning this decision should be directed to the Office of Patent Legal Administration at 571-272-7702.

UNITED STATES PATENT AND TRADEMARK OFFICE

UNITED STATES DEPARTMENT OF COMMERCE
United States Patent and Trademark Office
Address: COMMISSIONER FOR PATENTS
P.O. Box 1450
Alexandria, Virginia 22313-1450
www.uspto.gov

APPLICATION NO.	FILING DATE	FIRST NAMED INVENTOR	ATTORNEY DOCKET NO.	CONFIRMATION NO.
10/671,026	09/24/2003	Bruce Karsh	50269-0562	7849

73066 7590 09/21/2007
Hickman Palmero Truong & Becker LLP/
Yahoo! Inc.
2055 Gateway Place
Suite 550
San Jose, CA 95110-1089

EXAMINER
FRISBY, KESHA

ART UNIT	PAPER NUMBER
3714	

MAIL DATE	DELIVERY MODE
09/21/2007	PAPER

Please find below and/or attached an Office communication concerning this application or proceeding.

The time period for reply, if any, is set in the attached communication.

UNITED STATES PATENT AND TRADEMARK OFFICE

Commissioner for Patents
United States Patent and Trademark Office
P.O. Box 1450
Alexandria, VA 22313-1450
www.uspto.gov

HICKMAN PAPERMO TRUONG & BECKER, LLP/
Yahoo! Inc.
2055 Gateway Place
Suite 550
San Jose, CA 95110-1089

8/21/07

In re Application of:
Karsh, Bruce, et al.
Serial No.: 10/671,026
Filed: September 24, 2003
Docket: 50269-0562
Title: VISIBLY DISTINGUISHING PORTIONS OF COMPOUND WORDS

DECISION ON PETITION

This is a decision on the petition filed on January 10, 2007 under 37 CFR § 1.181. Petitioner requests withdrawal of abandonment.

The petition is granted.

Background

Applicants submitted an application for patent on September 24, 2003. The application included, *inter alia*, a declaration under 37 CFR § 1.63 and a Utility Patent Application Transmittal form. The declaration provides the following correspondence address:

HICKMAN PAPERMO TRUONG & BECKER, LLP
1600 Willow Street
San Jose, California 95125-5106

The transmittal includes a Customer Number, 29989. A review of the Table of Contents of the file indicates that a notice of the association of this customer number to 1600 Willow Street was to be communicated by the U.S.P.T.O. (Office) via an Office form dated on the Contents line December 23, 2004 and listed on the Contents as "Change of Address". However, there is no date stamp on the form to indicate it was actually mailed to applicants' legal representative. Another line on the Contents with "Change of Address" and dated January 11, 2005 includes the same Office form on a second page of the line with "12-23-04" handwritten on it but this also does not evidence a formal mailing from the Office.

An Office action by the assigned examiner was mailed May 09, 2006 but was returned to the Office as undelivered on May 19, 2006. Page 37 of the contents of the return mailing includes a copy of the envelope which has a label presumably from the U.S. Postal Service and which states:

FORWARD TIME EXP RTN TO SEND
HICKMAN PAPERMO TRUONG & BECKER, LLP
2055 OLTEWAY PL STE 550
SAN JOSE, CA 95110-1083

On August 22, 2006, applicants filed a status inquiry with the new address but did not provide the Customer Number and a change of address. However, on December 04, 2006 a Power of Attorney was filed which included the Custom Number. The NOTICE OF ACCEPTANCE OF POWER OF ATTORNEY (comprising page 2 of the Contents line set forth as "Communication-Re: Power of Attorney (PTOL-308)") was mailed December 12, 2006 to the new address. Since the Office action had been mailed May 09, 2006, the application is technically abandoned. On January 10, 2007, the petition to which this decision is based was filed. It is to be noted that a paper was filed August 10, 2007 associating the file with a new Customer Number (73066) and changing the address to:

HICKMAN PAPERMO TRUONG & BECKER, LLP/
Yahoo! Inc.
2055 Gateway Place
Suite 550
San Jose, CA 95110-1089

This address is now in the Office PALM records along with the new Customer Number as the correspondence address and is the address to which this decision is mailed.

Discussion

Along with the petition were included several additional papers. One is "Request for Customer Number Data Change" (Form PTO/SB/124A). There is no evidence of when it was filed but is dated December 17, 2004 as to when it was signed by one of applicants' legal representatives, Edward A. Becker (Registration No. 37,777) and includes the address change:

HICKMAN PAPERMO TRUONG & BECKER, LLP/
2055 Gateway Place, Suite 550
San Jose, California 95110

A facsimile transmittal sheet is also included with the Customer Number 29989. It includes a typed date of December 17, 2004 but was corrected by hand to change "17" to - - 22 - -. It further includes that it was being sent to the Electronic Business Center of the

U.S. Patent & Trademark Office. There is no Certificate of Facsimile on either paper but Petitioner included a TRANSMISSION VERIFICATION REPO dated December 17, 2004 and a second similar paper but dated December 22, 2004. A copy of an Auto-Reply Facsimile Transmission paper from the Office by facsimile transmission and dated December 17, 2004 is also included in the petition. This paper verifies a Customer Number Data Change for number 29989.

The Auto-Reply Facsimile Transmission paper dated December 17, 2004 is considered evidence that applicants filed a proper change of address that was not entered. For unknown reasons the 37 CFR §1.63 declaration and accompanying transmittal on September 23, 2004 were not associated between the application serial number and the Customer Number. Because of this, it appears the change of address was not timely made by the Office at no fault of the applicants. Subsequently, the examiner's Office action was sent to the wrong address.

MPEP § 707.13 Returned Office Action, states in part:

Office actions are sometimes returned to the Office because the United States Postal Service has not been able to deliver them. **>Upon receipt of the returned Office action, the Technology Center (TC) technical support staff will check the application file record to ensure that the Office action was mailed to the correct correspondence address. If the Office action was not mailed to the correct correspondence address, it should be stamped "remailed" with the remailing date and mailed to the correct correspondence address. The period running against the application begins with the date of remailing.

Decision

The history of the application along with the evidence submitted by Petitioner indicates that the applicants made a timely and proper address change. In view of this and in accordance with MPEP § 707.13, the Office action of record is to be remailed with a new shortened statutory period of three months beginning from the date of remailing of the Office action. The application is being forwarded to the appropriate staff for this remailing. The application is considered not abandoned and is withdrawn from abandonment to the degree it was considered technically abandoned.

PETITION GRANTED.

It is noted that the petitioner included a check in the amount of $400.00 to cover any fees for the petition though seeking relief under 37 CFR § 1.181. The petition was treated under 37 CFR § 1.181 which does not require a fee. Petitioner may request a refund in accordance with 37 CFR § 1.26. See MPEP 607.02.

Any inquiry regarding this decision should be directed to Allan N. Shoap, Special Programs Examiner, at (571) 272-4514.

Karen M. Young

Karen M. Young, Director
Technology Center 3700

UNITED STATES PATENT AND TRADEMARK OFFICE

UNITED STATES DEPARTMENT OF COMMERCE
United States Patent and Trademark Office
Address: COMMISSIONER FOR PATENTS
P.O. Box 1450
Alexandria, Virginia 22313-1450
www.uspto.gov

APPLICATION NO.	FILING DATE	FIRST NAMED INVENTOR	ATTORNEY DOCKET NO.	CONFIRMATION NO.
10/671,026	09/24/2003	Bruce Karsh	50269-0562	7849

73066 7590 03/12/2008
HICKMAN PALERMO TRUONG & BECKER LLP/Yahoo! Inc.
2055 Gateway Place
Suite 550
San Jose, CA 95110-1083

EXAMINER
FRISBY, KESHA

ART UNIT	PAPER NUMBER
3714	

MAIL DATE	DELIVERY MODE
03/12/2008	PAPER

Please find below and/or attached an Office communication concerning this application or proceeding.

The time period for reply, if any, is set in the attached communication.

UNITED STATES PATENT AND TRADEMARK OFFICE

Commissioner for Patents
United States Patent and Trademark Office
P.O. Box 1450
Alexandria, VA 22313-1450
www.uspto.gov

HICKMAN PALERMO TRUONG & BECKER LLP/Yahoo! Inc.
2055 Gateway Place
Suite 550
San Jose CA 95110-1083

In re Application of: Karsh, Bruce et al Serial No.: 10/671,026 Filed: Sep. 24, 2003 Docket: 50269-0562 Title: VISIBLY DISTINGUISHING PORTIONS OF COMPOUND WORDS	Decision on Petition to Reissue the Outstanding Office Action and Reset a Period of Reply

This is a decision on the petition filed Mar. 6, 2008 requesting the holding of abandonment be withdrawn. This petition is being considered pursuant to 37 CFR § 1.181. No fee is required.

The petition is Granted.

The application was held abandoned for failure to timely and properly reply to the re-mailed Office action mailed Sep. 21, 2007. The Office action set a three (3) month period for reply. No response was received and no extensions of time under 37 CFR § 1.36(a) were requested. It is noted the notice of abandonment has not been mailed. The application is technically abandoned for failure to respond to the Office action.

Facts in the Record and Facts Presented by Petitioners

1) On Sep. 21, 2007, the examiner re-mailed a non-final Office action to the address of record. There does not appear to be any abnormality in the mail service. No mail was returned by the U.S. Post Office.
2) On or about Feb. 20, 2008, the applicant's attorney learned from the applicant that an outstanding re-mailed Office action of May 9, 2006 was due.
3) On Mar. 4, 2008, the applicants' attorney filed a petition to request to re-mail the Office action of Oct. 18, 2007 and reset a period of reply was filed.
4) On Mar. 6, 2008, the current petition was filed with supporting documents.

Discussion and Analysis

Relevant section of the MPEP § 711.03 (C) (1)(A) states:

> The showing required to establish nonreceipt of an Office communication must include a statement from the practitioner stating that the Office communication was not received by the practitioner and attesting to the fact that a search of the file jacket and docket records indicates that the Office communication was not received. A copy of the docket record where the nonreceived Office communication would have been entered had it been received and docketed must be attached to and referenced in practitioner's statement. For example, if a three month period for reply was set in the nonreceived Office action, a copy of the docket report showing all replies docketed for a date three months from the mail date of the nonreceived Office action must be submitted as documentary proof of nonreceipt of the Office action. The showing outlined above may not be sufficient if there are circumstances that point to a conclusion that the Office action may have been lost after receipt rather than a conclusion that the Office action was lost in the mail (e.g., if the practitioner has a history of not receiving Office actions). Evidence of nonreceipt of an Office communication or action (e.g., Notice of Abandonment or an advisory action) other than that action to which reply was required to avoid abandonment would not warrant withdrawal of the holding of abandonment. Abandonment takes place by operation of law for failure to reply to an Office action or timely pay the issue fee, not by operation of the mailing of a Notice of Abandonment.

In support of this petition, the petitioner has supplied a statement attesting that a search of the file and docket recording system indicates that no office action has been received. The petitioner has also supplied a copy of the Case Tracking System report for Dec. 2007 and Detailed Matter Report of the application.

The petitioner has provided sufficient evidence to show non-receipt of the Office action mailed on Sep. 21, 2007. The petitioner has stated the communication was not received, and attested to the fact that a search of the file jacket and docket records indicates the Office communication was not received, Additionally, copies of the relevant docket records have been attached.

Conclusion

Since the petitioner has met all the requirements set forth by M.P.E.P. § 711.03(c)(1) (A), the petition is hereby granted. The holding of abandonment is withdrawn. A copy of the original non-final office action of May 9, 2006 will be re-mailed again. This application is being forwarded to the examiner in Art Unit 3773 for appropriate action. Any inquiry regarding this decision should be directed to Henry Yuen, Special Programs Examiner at (571)-272-4856.

PETITION GRANTED

Frederick R. Schmidt, Director
Technology Center 3700

UNITED STATES PATENT AND TRADEMARK OFFICE

Commissioner for Patents
United States Patent and Trademark Office
P.O. Box 1450
Alexandria, VA 22313-1450
www.uspto.gov

FEB 15 2005

LADAS & PARRY
26 WEST 61ST STREET
NEW YORK NY 10023

In re Application of	:
Noel John DeSouza et al	:
Serial No.: 10/671,040	: SUSPENSION OF ACTION
Filed: September 25, 2003	:
Attorney Docket No.: U014826-4	:

This is in reply to the petition under 37 CFR 1.103 to suspend action on this application at applicant's request for a period of three months, filed January 26, 2005.

A review of the file history shows that applicants replied to the non-Final Office action mailed July 8, 2004, on January 13, 2005 (Certificate of Mailing dated January 10, 2005), including a request and fee for a three month extension of time. Applicants request that action on this application be suspended for three months in order to complete experiments demonstrating unexpected properties.

§ 1.103 Suspension of action by the Office.

(a) Suspension for cause . On request of the applicant, the Office may grant a suspension of action by the Office under this paragraph for good and sufficient cause. The Office will not suspend action if a reply by applicant to an Office action is outstanding. Any petition for suspension of action under this paragraph must specify a period of suspension not exceeding six months. Any petition for suspension of action under this paragraph must also include:
(1) A showing of good and sufficient cause for suspension of action; and
(2) The fee set forth in § 1.17(h), unless such cause is the fault of the Office.

Applicants' petition states that they are presently conducting experiments to establish that the invention is novel and unobvious. Applicants provide a complete reply to each of the rejections of record, but also state that further experiments are being conducted as noted above. Applicants, however, give no general description of the experiments being conducted nor is any indication given when the experiments will be completed or results be tabulated for presentation. No explanation is given as to why the experiments could not have been completed earlier. In summary, no showing of good or sufficient cause has been made.

In view of the above reason the petition is **DISMISSED**. Applicants may submit a renewed petition, if desired, addressing the deficiencies noted above. Any renewed petition must be submitted within TWO MONTHS of the mail date of this decision in order to be considered timely.

The application will be forwarded to the examiner for further consideration.

Should there be any questions with respect to this action, please contact William R. Dixon, Jr., by mail addressed to: Director, Technology Center 1600, P. O. BOX 1450, ALEXANDRIA, VA 22313-1450, or by telephone at 571-272-0519 or by facsimile transmission at the Office general facsimile number, 571-273-8300.

Bruce M. Kisliuk
Director, Technology Center 1600

UNITED STATES PATENT AND TRADEMARK OFFICE

COMMISSIONER FOR PATENTS
UNITED STATES PATENT AND TRADEMARK OFFICE
P.O. BOX 1450
ALEXANDRIA, VA 22313-1450
www.uspto.gov

FSP LLC
P.O. BOX 890
VANCOUVER, WA 98666

COPY MAILED
AUG 14 2006
OFFICE OF PETITIONS

In re Application of :
Atherton : DECISION ON PETITION
Application No. 10/671,051 :
Filed: September 24, 2003 :
Atty. Dkt. No.: FSP0035 :

This is a decision on the petition under 37 CFR 1.137(b), filed February 15, 2006, to revive the above-identified application.

The petition is **GRANTED**.

This application became abandoned for failure to timely submit a proper reply to the final Office action mailed March 30, 2005. The final Office action set a three (3) month shortened statutory period of time for reply. Notice of Abandonment was mailed November 2, 2005.

A grantable petition under 37 CFR 1.137(b) must be accompanied by: (1) the required reply, unless previously filed; (2) the petition fee as set forth in 37 CFR 1.17(l); (3) a showing to the satisfaction of the Commissioner that the entire delay in filing the required reply from the due date for the reply until the filing of a grantable petition pursuant to 37 CFR 1.137(b) was unintentional; and (4) any terminal disclaimer (and fee as set forth in 37 CFR 1.20(d)) required pursuant to 37 CFR 1.137(c).

The instant petition has been reviewed and found in compliance with the provisions of 37 CFR 1.137(b). Accordingly, the failure to timely submit a proper reply to the final Office action is accepted as having been unintentionally delayed.

This application file is being forwarded to Technology Center 3600 for processing of the RCE submitted herewith.

Telephone inquiries concerning this matter may be directed to the undersigned at (571) 272-3205.

Alesia M. Brown
Petitions Attorney
Office of Petitions

UNITED STATES PATENT AND TRADEMARK OFFICE

Commissioner for Patents
United States Patent and Trademark Office
P.O. Box 1450
Alexandria, VA 22313-1450
www.uspto.gov

INTERNATIONAL BUSINESS MACHINES CORPORATION
C/O HAMILTON & TERRILE, LLP
P. O. BOX 203518
AUSTIN, TX 78720

COPY MAILED

AUG 02 2007

OFFICE OF PETITIONS

In re Application of	:	
Joel Howard Schopp	:	
Application No. 10/671,061	:	DECISION ON PETITION
Filed: September 25,2003	:	
Attorney Docket No. AUS920030450US1	:	

This is a decision on the petition under 37 CFR 1.137(b), filed November 14, 2006, to revive the above-identified application.

The petition is **GRANTED.**

The application became abandoned for failure to reply in a timely manner to the non-final Office action mailed, October 6, 2005, which set a shortened statutory period for reply of three (3) months. No extensions of time were obtained under the provisions of 37 CFR 1.136(a). Accordingly, the application became abandoned on January 7, 2006. A Notice of Abandonment was mailed on June 28, 2006.

The petition satisfies the requirements of 37 CFR 1.137(b) in that petitioner has supplied (1) the reply, (2) the petition fee of $1,500, and (3) a proper statement of unintentional delay. Accordingly, the failure to timely reply to the non-final Office action of October 6, 2005 is accepted as being unintentionally delayed.

It is not apparent whether the person signing the statement of unintentional delay was in a position to have firsthand or direct knowledge of the facts and circumstances of the delay at issue. Nevertheless, such statement is being treated as having been made as the result of a reasonable inquiry into the facts and circumstances of such delay. See 37 CFR 10.18(b) and Changes to Patent Practice and Procedure; Final Rule Notice, 62 Fed. Reg. 53131, 53178 (October 10, 1997), 1203 Off. Gaz. Pat. Office 63, 103 (October 21, 1997). In the event that such an inquiry has not been made, petitioner must make such an inquiry. If such

inquiry results in the discovery that it is not correct that the entire delay in filing the required reply from the due date for the reply until the filing of a grantable petition pursuant to 37 CFR 1.137(b) was unintentional, petitioner must notify the Office.

This application is being referred to Technology Center AU 2111 for appropriate action in the normal course of business on the reply received November 14, 2006.

Telephone inquiries concerning this decision should be directed to the undersigned at (571) 272-3218.

Frances Hicks
Petitions Examiner
Office of Petitions

UNITED STATES PATENT AND TRADEMARK OFFICE

Commissioner for Patents
United States Patent and Trademark Office
P.O. Box 1450
Alexandria, VA 22313-1450
www.uspto.gov

Patent No. : 7,383,368 B2
Serial No. : 10/671,061
Inventor(s) : Schopp
Issued : June 3, 2008
Title : **METHOD AND SYSTEM FOR AUTONOMICALLY ADAPTIVE MUTEXES BY CONSIDERING ACQUISITION COST VALUE**
Docket No. : **AUS920030450US1**

Re: Request for Reconsideration

Consideration has been given your request for the issuance of a certificate of correction for the above-identified patent under the provisions of 37 CFR 1.322 and/or 1.323.

A petition under 37 CFR 3.81 must be filed and granted to fulfill your request, to date, there is no petition on record to consider your request to add Assignee.

Furthermore, Assignees' and/ or Co-assignees' names and addresses (assignment data) printed in a patent are based *solely* on information supplied in the appropriate space for identifying the assignment data, i.e., item 3 of the Fee(s) Transmittal Form PTOL-85B. After payment of the issue fee, correction of assignment data submitted on the PTOL-85B can only be done by Certificate of Correction under 37 CFR 1.323, which requires petition under 37 CFR 3.81(b).

A request for a patent to be corrected to state the name of the assignee must:

A. state that the assignment was submitted for recordation as set forth in 37 CFR 3.11 before issuance of the patent;
B. include a request for a certificate of correction under 37 CFR 1.323 along with the fee set forth in 37 CFR 1.20(a); and
C. include the processing fee set forth in 37 CFR 1.17(i).

If the request is granted, Certificates of Correction Branch will be notified that a Certificate of Correction may be issued.
See Manual of Patent Examining Procedure, Section 1481.01 (Rev. 3) (Oct. 2005).

Applicant has not included items B and or C above, accordingly, the request for Certificate of Correction to add or change the assignee data is dismissed.
Any request under 37 CFR 3.81(b) should be directed to the following address or facsimile number:

By mail: Mail Stop PETITIONS
Commissioner for Patents
Post Office Box 1450
Alexandria, VA 22313-1450

By hand: Customer Service Window
Mail Stop Petitions
Randolph Building
401 Dulany Street
Alexandria, VA 22314

By fax: 571-273-8300 ATTN: Office of Petitions

If, the petition under 37 CFR 1.182 (required fee currently $130), is filed and granted, the patentee would be entitled to a certificate of correction under 37 CFR 1.323 (required fee currently $100), which has been received.

Ernest C. White, *LIE*
For Mary F. Diggs (703) 308-9390 x 125
Decisions & Certificates
of Correction Branch
(703) **308-9390 x 122**

HAMILTON & TERRILE, LLP
IBM Austin
P.O. BOX 203518
AUSTIN TX 78720

ecw

UNITED STATES PATENT AND TRADEMARK OFFICE

Commissioner for Patents
United States Patent and Trademark Office
P.O. Box 1450
Alexandria, VA 22313-1450
www.uspto.gov

HAMILTON & TERRILE, LLP
IBM Austin
P.O. BOX 203518
AUSTIN TX 78720

MAILED
JUN 08 2010
OFFICE OF PETITIONS

In re Patent No. 7,383,368 :
Issue Date: June 3, 2008 :
Application No. 10/671,061 : ON PETITION
Filed: September 25, 2003 :
Attorney Docket No. AUS920030450US1 :

This is a decision on the petition filed May 4, 2010, which is being treated as a request under 37 CFR 3.81(b)[1] to correct the name of the assignee on the front page of the above-identified patent by way of a Certificate of Correction.

The request is **GRANTED**.

Telephone inquiries concerning this decision may be directed to the JoAnne Burke at (571) 272-4584. Inquiries regarding the issuance of a certificate of correction should be directed to the Certificate of Correction Branch at (571) 272-4200.

As authorized, the $130 fee for the petition under 37 CFR 3.81(b) has been assessed to petitioner's deposit account.

The Certificates of Correction Branch will be notified of this decision granting the petition under 37 CFR 3.81(b) and directing issuance of the requested Certificate of Correction.

/JoAnne Burke/
JoAnne Burke
Petitions Examiner
Office of Petitions

---

[1] *See* MPEP 1309, subsection II; and Official Gazette of June 22, 2004.

UNITED STATES PATENT AND TRADEMARK OFFICE

Commissioner for Patents
United States Patent and Trademark Office
P.O. Box 1450
Alexandria, VA 22313-1450
www.uspto.gov

ISIS PHARMACEUTICALS INC
1896 RUTHERFORD RD.
CARLSBAD CA 92008

COPY MAILED

MAY 19 2009

OFFICE OF PETITIONS

In re Application of	:	
Dobie et al.	:	DECISION ON PETITION
Application No. 10/671,074	:	TO WITHDRAW
Filed: September 25, 2003	:	FROM RECORD
Attorney Docket No. HTS-0008US.P1	:	

This is a decision on the Request to Withdraw as attorney or agent of record under 37 C.F.R. § 1.36(b), filed June 30, 2006.

The request is **NOT APPROVED** because it is moot.

A review of the file record indicates that on June 29, 2006 the power of attorney was revoked by the assignee of the patent application. Accordingly, the request to withdraw under 37 C.F.R. § 1.36(b) is moot.

All future communications from the Office will be directed to the above address until otherwise notified by applicant.

Telephone inquires concerning this decision should be directed to the undersigned at 571-272- 7751. All other inquires concerning either the examination or status of the application should be directed to the Technology Center.

Joan Olszewski

Joan Olszewski
Petitions Examiner
Office of Petitions

UNITED STATES PATENT AND TRADEMARK OFFICE

UNITED STATES DEPARTMENT OF COMMERCE
United States Patent and Trademark Office
Address: COMMISSIONER FOR PATENTS
P.O. Box 1450
Alexandria, Virginia 22313-1450
www.uspto.gov

IBM CORPORATION
INTELLECTUAL PROPERTY LAW
11501 BURNET ROAD
AUSTIN, TX 78758

Mail Date: 04/20/2010

Applicant	: Janani Janakiraman	: DECISION ON REQUEST FOR
Patent Number	: 7607097	: RECALCULATION of PATENT
Issue Date	: 10/20/2009	: TERM ADJUSTMENT IN VIEW
Appliction No	: 10/671,081	: OF WYETH AND NOTICE OF INTENT TO
Filed	: 09/25/2003	: ISSUE CERTIFICATE OF CORRECTION
		:

The Request for Recalculation is **GRANTED** to the extent indicated.

The patent term adjustment has been determined to be **991** days. The USPTO will *sua sponte* issue a certificate of correction reflecting the amount of PTA days determined by the recalculation.

Prior to the issuance of the certificate of correction, the USPTO will afford patentee an opportunity to be heard and request reconsideration. Accordingly, patentee has **one month or thirty (30) days**, whichever is longer, to file a request for reconsideration of this patent term adjustment calculation. See 35 U.S.C. 154(b)(3)(B)(ii) and 37 CFR 1.322(a)(4). No extensions of time will be granted under 37 CFR 1.136.

Patentee should use document code PET.OP if electronically filing a request for reconsideration of this patent term adjustment calculation. The patentee must also include the information required by 37 CFR 1.705(b)(2) and the fee required by 37 CFR 1.18(e). If patentee does not file a timely request for reconsideration of this patent term adjustment calculation including the information required by 37 CFR 1.705(b)(2) and the fee required by 37 CFR 1.18(e), the USPTO will issue a certificate of correction reflecting the PTA determination noted above.

Patentee should be aware that in order to preserve the right to review in the United States District Court for the District of Columbia of the USPTO patent term adjustment determination, patentee must ensure that he or she also take the steps required under 35 U.S.C. 154(b)(4)(A) in a timely manner. Nothing in the request for recalculation should be construed as providing an alternative time frame for commencing a civil action under 35 U.S.C. 154(b)(4)(A).

Any questions concerning this decision should be directed to the Office of Patent Legal Administration at 571-272-7702.

UNITED STATES PATENT AND TRADEMARK OFFICE

UNITED STATES DEPARTMENT OF COMMERCE
United States Patent and Trademark Office
Address: COMMISSIONER FOR PATENTS
P.O. Box 1450
Alexandria, Virginia 22313-1450
www.uspto.gov

IBM CORPORATION
INTELLECTUAL PROPERTY LAW
11501 BURNET ROAD
AUSTIN, TX 78758

Mail Date: 05/17/2010

Applicant : Janani Janakiraman
Patent Number : 7607097
Issue Date : 10/20/2009
Application No : 10/671,081
Filed : 09/25/2003

: NOTICE CONCERNING IMPROPER
: CALCULATION OF PATENT TERM
: ADJUSTMENT BASED UPON USPTO
: IMPROPERLY MEASURING REDUCTION
: PERIOD UNDER 37 CFR 1.704(c)(10).

The United States Patent and Trademark Office (USPTO) discovered that in processing the recent recalculation decisions mailed in response to patentee's filed Request for Recalculation of Patent Term Adjustment in view of Wyeth, the USPTO improperly measured the reduction period for reductions under 37 CFR 1.704(c)(10). Pursuant to 37 CFR 1.704(c)(10), patentee's reduction begins on the date of filing the amendment under 37 CFR 1.312 ("1.312 amendment") or other related paper and ends on the date that the Office mails a response to the filing of the 1.312 amendment or other paper. It has been discovered that during the recalculation, the calculation failed to the limit the reduction to the mail date of the response to the 1.312 amendment or other paper. Accordingly, patentee's reductions were greater than warranted.

This notice **VACATES** the previous GRANTED request for recalculation and provides patentee with a revised GRANTED recalculation.

The patent term adjustment has been determined to be **1102** days. The USPTO will *sua sponte* issue a certificate of correction reflecting the amount of patent term adjustment (PTA) days determined by the recalculation.

Prior to the issuance of the certificate of correction, the USPTO will afford patentee an opportunity to be heard and request reconsideration. Accordingly, patentee has **one month or thirty (30) days** from the mail date of this notice, whichever is longer, to file a request for reconsideration of this PTA calculation. See 35 U.S.C. § 154(b)(3)(B)(ii) and 37 CFR 1.322(a)(4).

Patentee should use document code PET.OP if electronically filing a request for reconsideration of this PTA calculation. The patentee must also include the information required by 37 CFR 1.705(b)(2), and the fee required by 37 CFR 1.18(e). If patentee does not file a timely request for reconsideration of this PTA calculation, including the information required by 37 CFR 1.705(b)(2) and the fee required by 37 CFR 1.18(e), the USPTO will issue a certificate of correction reflecting the PTA determination noted above.

Patentee should be aware that in order to preserve the right of review of the USPTO's PTA determination in the United States District Court for the District of Columbia, patentee must ensure that the steps required under 35 U.S.C. § 154 (b)(4) are taken in a timely manner. Nothing in the request for recalculation should be construed as providing an alternative time frame for commencing a civil action under 35 U.S.C. § 154(b)(4).

UNITED STATES PATENT AND TRADEMARK OFFICE

Commissioner for Patents
United States Patent and Trademark Office
P.O. Box 1450
Alexandria, VA 22313-1450
www.uspto.gov

UNIVERSITY OF CALIFORNIA
LOS ALAMOS NATIONAL LABORATORY
P.O. BOX 1663, MS A187
LOS ALAMOS NM 87545

COPY MAILED

SEP 2 6 2005

OFFICE OF PETITIONS

In re Application of

Funsten, et al.

Application No. 10/671,109

Filed: September 25, 2003

Attorney Docket No. S-100,630

DECISION ON PETITION

This is a decision on the petition under 37 CFR §1.137(b), September 13, 2005, to revive the above-identified application. The petition will be treated as a petition to withdraw the holding of abandonment pursuant to 37 CFR 1.181.

The petition is **granted**.

This application was abandoned for failure to timely remit the issue fee of $750.00 and the publication fee of $300.00 as required by the Notice of Allowance and Issue Fee Due (the "Notice") mailed March 23, 2005. The Notice set forth a three (3) month statutory period for reply. No response was believed to be received within the allowable period. Accordingly, this application became abandoned on June 24, 2005. A Notice of Abandonment was mailed on September 6, 2005. Petitioner has filed a copy of the facsimile transmission sheet by which the Office acknowleged receipt of the Issue Fee Transmittal Form on March 30, 2005. Petitioner also filed a copy of the Issue Fee Transmittal form that contains a certificate of mailing under 37 CFR 1.8 showing a date of March 30, 2005. Petitioner has established that the application was improperly abandoned. The Notice of Abandonment mailed September 6, 2005, is withdrawn, accordingly.

The issue fee of $700.00 and publication fee of $300.00 will be charged to deposit account 12-2150.

The application is being directed to the Office of Patent Publications for further processing.

Telephone inquiries concerning this matter may be directed to the undersigned at (571) 272-3222.

Kenya A. McLaughlin
Petitions Attorney
Office of Petitions

UNITED STATES PATENT AND TRADEMARK OFFICE

Commissioner for Patents
United States Patent and Trademark Office
P.O. Box 1450
Alexandria, VA 22313-1450
www.uspto.gov

LOS ALAMOS NATIONAL SECURITY, LLC
LOS ALAMOS NATIONAL LABORATORY
PPO. BOX 1663, LC/IP, MS A187
LOS ALAMOS NM 87545

COPY MAILED

DEC 11 2009

OFFICE OF PETITIONS

In re Application of :
Herbert O. Funsten, et al. :
Patent No. 7,019,446 :
Application No. 10/671,109 :
Filed: September 25, 2003 :
Attorney Docket No. S-100,630

NOTICE

This is a notice regarding your request for acceptance of a fee deficiency submission under 37 CFR 1.28 in the above identified patent. Note that a separate copy of every paper must be furnished for each file to which the paper pertains. See 37 CFR 1.4(b). This Notice only relates to your request in the above identified patent file, and not to the other applications listed on the request.

Your fee deficiency submission under 37 CFR 1.28 is **NOT ACCEPTED**.

The request was not signed by a person having the authority to prosecute the application before the Patent Office.

In this regard, petitioner's attention is directed to 37 CFR 1.33(b), which states.

(b) Amendments and other papers. Amendments and other papers, except for written assertions pursuant to § 1.27(c)(2)(ii) of this part, filed in the application must be signed by:

(1) A registered patent attorney or patent agent of record appointed in compliance with § 1.32(b);

(2) A registered patent attorney or patent agent not of record who acts in a representative capacity under the provisions of § 1.34;

(3) An assignee as provided for under §3.71(b) of this chapter; or

(4) All of the applicants (§ 1.41(b)) for patent, unless there is an assignee of the entire interest and such assignee has taken action in the application in accordance with § 3.71 of this chapter.

An unsigned amendment (or other paper) or one not properly signed by a person having authority to prosecute the application is not entered. This applies, for instance, where the amendment (or other paper) is signed by a Patent Paralegal who has not been given power of attorney.

Inquiries related to this communication should be directed to Terri Johnson at (571) 272-2991.

Chris Bottorff
Petitions Examiner
Office of Petitions

UNITED STATES PATENT AND TRADEMARK OFFICE

Commissioner for Patents
United States Patent and Trademark Office
P.O. Box 1450
Alexandria, VA 22313-1450
www.uspto.gov

WESTMAN CHAMPLIN & KELLY, P.A.
SUITE 1400
900 SECOND AVENUE SOUTH
MINNEAPOLIS MN 55402-3244

COPY MAILED

AUG 2 8 2008

OFFICE OF PETITIONS

In re Application of
Yossi Gross et al
Application No. 10/671,144
Filed: September 24, 2003
Attorney Docket No. A92.12-0033/AMS 3100
B-1

DECISION GRANTING PETITION
UNDER 37 CFR 1.313(c)(2)

This is a decision on the petition under 37 CFR 1.313(c)(2), filed August 27, 2008, to withdraw the above-identified application from issue after payment of the issue fee.

The petition is **GRANTED**.

The above-identified application is withdrawn from issue for consideration of a submission under 37 CFR 1.114 (request for continued examination). *See* 37 CFR 1.313(c)(2).

Petitioner is advised that the issue fee paid on August 7, 2008 cannot be refunded. If, however, this application is again allowed, petitioner may request that it be applied towards the issue fee required by the new Notice of Allowance.[1]

Telephone inquiries should be directed to the undersigned at (571) 272-3208.

This application is being referred to Technology Center AU 3735 for processing of the request for continued examination under 37 CFR 1.114 and for consideration of the concurrently filed IDS.

Karen Creasy
Petitions Examiner
Office of Petitions

[1] *The request to apply the issue fee to the new Notice may be satisfied by completing and returning the new Part B – Fee(s) Transmittal Form (along with any balance due at the time of submission). Petitioner is advised that the Issue Fee Transmittal Form must be completed and timely submitted to avoid abandonment of the application.*

UNITED STATES PATENT AND TRADEMARK OFFICE

Commissioner for Patents
United States Patent and Trademark Office
P.O. Box 1450
Alexandria, VA 22313-1450
www.uspto.gov

WESTMAN CHAMPLIN & KELLY, P.A.
SUITE 1400
900 SECOND AVENUE SOUTH
MINNEAPOLIS, MN 55402

MAILED

MAR 17 2009

OFFICE OF PETITIONS

In re Application of	:	
Yossi Gross, et al.	:	
Application No. 10/671,144	:	ON PETITION
Filed: September 24, 2003	:	
Attorney Docket No. A92.12-0033/AMS 3100 B-1	:	

This is a decision on the petition, filed March 13, 2009, under 37 CFR 1.313(c)(2) to withdraw the above-identified application from issue after payment of the issue fee. This is also a decision on the petition under 37 CFR 1.78(a)(3), filed March 13, 2009, to accept an unintentionally delayed claim under 35 U.S.C. §120 for the benefit of priority to the prior-filed nonprovisional applications set forth in the concurrently filed amendment.

The petitions are **GRANTED**.

As to the petition under 37 CFR 1.313(c)(2):

The above-identified application is withdrawn from issue for consideration of a submission under 37 CFR 1.114 (request for continued examination). See 37 CFR 1.313(c)(2).

Petitioner is advised that the issue fee paid on February 19, 2009, in the above-identified application cannot be refunded. If, however, the above-identified application is again allowed, petitioner may request that it be applied towards the issue fee required by the new Notice of Allowance. [1]

As to the petition under 37 CFR 1.78(a)(3):

A petition for acceptance of a claim for late priority under 37 CFR 1.78(a)(3) is only applicable to those applications filed on or after November 29, 2000. Further, the petition is appropriate only after the expiration of the period specified in 37 CFR 1.78(a)(2)(ii). In addition, the petition under 37 CFR 1.78(a)(3) must be accompanied by:

[1]The request to apply the issue fee to the new Notice may be satisfied by completing and returning the new Issue Fee Transmittal Form PTOL-85(b), which includes the following language thereon: "Commissioner for Patents is requested to apply the Issue Fee and Publication Fee (if any) or re-apply any previously paid issue fee to the application identified above." Petitioner is advised that, whether a fee is indicated as being due or not, the Issue Fee Transmittal Form **must** be completed and timely submitted to avoid abandonment. Note the language in bold text on the first page of the Notice of Allowance and Fee(s) Due (PTOL-85).

(1) the reference required by 35 U.S.C. § 120 and 37 CFR 1.78(a)(2)(i) of the prior-filed application(s), unless previously submitted[2];
(2) the surcharge set forth in § 1.17(t); and
(3) a statement that the entire delay between the date the claim was due under 37 CFR 1.78(a)(2)(ii) and the date the claim was filed was unintentional. The Commissioner may require additional information where there is a question whether the delay was unintentional.

The petition satisfies all of the above requirements.

A corrected Filing Receipt, which includes the priority claim to the prior-filed nonprovisional application, accompanies this decision on petition.

The granting of the petition to accept the delayed benefit claim to the prior-filed application(s) under 37 CFR 1.78(a)(3) should not be construed as meaning that the instant application is entitled to the benefit of the prior-filed application(s). In order for the instant application to be entitled to the benefit of the prior-filed application(s), all other requirements under 35 U.S.C. § 120 and 37 CFR 1.78(a)(1) and (a)(2) must be met. Similarly, the fact that the corrected Filing Receipt accompanying this decision on petition includes the prior-filed application should not be construed as meaning that applicant is entitled to the claim for benefit of priority to the prior-filed application noted thereon. Accordingly, the examiner will, in due course, consider this benefit claim and determine whether the instant application is entitled to the benefit of the earlier filing date.

This application is being forwarded to Technology Center Art Unit 3735 for processing of the request for continued examination under 37 CFR 1.114 and for consideration by the Examiner of applicant's claim under 35 U.S.C. § 120 and 37 CFR 1.78(a)(1) and (2) for the benefit of priority to the prior-filed nonprovisional applications.

Telephone inquiries related to this decision should be directed to the undersigned at (571) 272-3204. Inquiries relating to further prosecution should be directed to the Technology Center.

Sherry D. Brinkley
Petitions Examiner
Office of Petitions

ATTACHMENT: Corrected Filing Receipt

[2] Any nonprovisional application or international application designating the United States of America claiming the benefit of one or more prior-filed copending applications or international applications designating the United States of America must contain or be amended to contain a reference (amendment to the first line of specification following the title or in an application data sheet (ADS) to each such prior-filed application, identifying it by applicant number (consisting of the series code and serial number) or international application number and international filing date and indicating the relationship of the applications. Cross reference to other related application may be made when appropriate (see § 1.14).

UNITED STATES PATENT AND TRADEMARK OFFICE

UNITED STATES DEPARTMENT OF COMMERCE
United States Patent and Trademark Office
Address: COMMISSIONER FOR PATENTS
P.O. Box 1450
Alexandria, Virginia 22313-1450
www.uspto.gov

APPLICATION NUMBER	FILING or 371(c) DATE	GRP ART UNIT	FIL FEE REC'D	ATTY.DOCKET.NO	TOT CLAIMS	IND CLAIMS
10/671,144	09/24/2003	3735	1137	A92.12-0033/AMS 3100 B-1	48	8

CONFIRMATION NO. 4554

CORRECTED FILING RECEIPT

27367
WESTMAN CHAMPLIN & KELLY, P.A.
SUITE 1400
900 SECOND AVENUE SOUTH
MINNEAPOLIS, MN 55402

OC000000035022714

Date Mailed: 03/16/2009

Receipt is acknowledged of this non-provisional patent application. The application will be taken up for examination in due course. Applicant will be notified as to the results of the examination. Any correspondence concerning the application must include the following identification information: the U.S. APPLICATION NUMBER, FILING DATE, NAME OF APPLICANT, and TITLE OF INVENTION. Fees transmitted by check or draft are subject to collection. Please verify the accuracy of the data presented on this receipt. **If an error is noted on this Filing Receipt, please submit a written request for a Filing Receipt Correction. Please provide a copy of this Filing Receipt with the changes noted thereon. If you received a "Notice to File Missing Parts" for this application, please submit any corrections to this Filing Receipt with your reply to the Notice. When the USPTO processes the reply to the Notice, the USPTO will generate another Filing Receipt incorporating the requested corrections**

Applicant(s)

Yossi Gross, Moshav, ISRAEL;
Ehud Cohen, Ganei Tikva, ISRAEL;
Israel Nissenkorn, Tel Aviv, ISRAEL;
David Lifschitz, Zurich, SWITZERLAND;

Power of Attorney: The patent practitioners associated with Customer Number 27367

Domestic Priority data as claimed by applicant

This application is a CON of 09/806,970 07/20/2001 PAT 6,652,449
which is a 371 of PCT/IL99/00528 10/05/1999
which is a CON of 09/167,244 10/06/1998 ABN

Foreign Applications

If Required, Foreign Filing License Granted: 12/19/2003

The country code and number of your priority application, to be used for filing abroad under the Paris Convention, is **US 10/671,144**

Projected Publication Date: Not Applicable

Non-Publication Request: No

Early Publication Request: No

Title

CONTROL OF URGE INCONTINENCE

Preliminary Class

600

PROTECTING YOUR INVENTION OUTSIDE THE UNITED STATES

Since the rights granted by a U.S. patent extend only throughout the territory of the United States and have no effect in a foreign country, an inventor who wishes patent protection in another country must apply for a patent in a specific country or in regional patent offices. Applicants may wish to consider the filing of an international application under the Patent Cooperation Treaty (PCT). An international (PCT) application generally has the same effect as a regular national patent application in each PCT-member country. The PCT process **simplifies** the filing of patent applications on the same invention in member countries, but **does not result** in a grant of "an international patent" and does not eliminate the need of applicants to file additional documents and fees in countries where patent protection is desired.

Almost every country has its own patent law, and a person desiring a patent in a particular country must make an application for patent in that country in accordance with its particular laws. Since the laws of many countries differ in various respects from the patent law of the United States, applicants are advised to seek guidance from specific foreign countries to ensure that patent rights are not lost prematurely.

Applicants also are advised that in the case of inventions made in the United States, the Director of the USPTO must issue a license before applicants can apply for a patent in a foreign country. The filing of a U.S. patent application serves as a request for a foreign filing license. The application's filing receipt contains further information and guidance as to the status of applicant's license for foreign filing.

Applicants may wish to consult the USPTO booklet, "General Information Concerning Patents" (specifically, the section entitled "Treaties and Foreign Patents") for more information on timeframes and deadlines for filing foreign patent applications. The guide is available either by contacting the USPTO Contact Center at 800-786-9199, or it can be viewed on the USPTO website at http://www.uspto.gov/web/offices/pac/doc/general/index.html.

For information on preventing theft of your intellectual property (patents, trademarks and copyrights), you may wish to consult the U.S. Government website, http://www.stopfakes.gov. Part of a Department of Commerce initiative, this website includes self-help "toolkits" giving innovators guidance on how to protect intellectual property in specific countries such as China, Korea and Mexico. For questions regarding patent enforcement issues, applicants may call the U.S. Government hotline at 1-866-999-HALT (1-866-999-4158).

LICENSE FOR FOREIGN FILING UNDER

Title 35, United States Code, Section 184

Title 37, Code of Federal Regulations, 5.11 & 5.15

GRANTED

The applicant has been granted a license under 35 U.S.C. 184, if the phrase "IF REQUIRED, FOREIGN FILING LICENSE GRANTED" followed by a date appears on this form. Such licenses are issued in all applications where the conditions for issuance of a license have been met, regardless of whether or not a license may be required as

set forth in 37 CFR 5.15. The scope and limitations of this license are set forth in 37 CFR 5.15(a) unless an earlier license has been issued under 37 CFR 5.15(b). The license is subject to revocation upon written notification. The date indicated is the effective date of the license, unless an earlier license of similar scope has been granted under 37 CFR 5.13 or 5.14.

This license is to be retained by the licensee and may be used at any time on or after the effective date thereof unless it is revoked. This license is automatically transferred to any related applications(s) filed under 37 CFR 1.53(d). This license is not retroactive.

The grant of a license does not in any way lessen the responsibility of a licensee for the security of the subject matter as imposed by any Government contract or the provisions of existing laws relating to espionage and the national security or the export of technical data. Licensees should apprise themselves of current regulations especially with respect to certain countries, of other agencies, particularly the Office of Defense Trade Controls, Department of State (with respect to Arms, Munitions and Implements of War (22 CFR 121-128)); the Bureau of Industry and Security, Department of Commerce (15 CFR parts 730-774); the Office of Foreign AssetsControl, Department of Treasury (31 CFR Parts 500+) and the Department of Energy.

NOT GRANTED

No license under 35 U.S.C. 184 has been granted at this time, if the phrase "IF REQUIRED, FOREIGN FILING LICENSE GRANTED" DOES NOT appear on this form. Applicant may still petition for a license under 37 CFR 5.12, if a license is desired before the expiration of 6 months from the filing date of the application. If 6 months has lapsed from the filing date of this application and the licensee has not received any indication of a secrecy order under 35 U.S.C. 181, the licensee may foreign file the application pursuant to 37 CFR 5.15(b).

UNITED STATES PATENT AND TRADEMARK OFFICE

UNITED STATES DEPARTMENT OF COMMERCE
United States Patent and Trademark Office
Address: COMMISSIONER FOR PATENTS
P.O. Box 1450
Alexandria, Virginia 22313-1450
www.uspto.gov

WESTMAN CHAMPLIN & KELLY, P.A.
SUITE 1400
900 SECOND AVENUE SOUTH
MINNEAPOLIS, MN 55402

Mail Date: 04/21/2010

Applicant	: Yossi Gross	: DECISION ON REQUEST FOR
Patent Number	: 7582053	: RECALCULATION of PATENT
Issue Date	: 09/01/2009	: TERM ADJUSTMENT IN VIEW
Appliction No	: 10/671,144	: OF WYETH AND NOTICE OF INTENT TO
Filed	: 09/24/2003	: ISSUE CERTIFICATE OF CORRECTION
		:

The Request for Recalculation is **GRANTED** to the extent indicated.

The patent term adjustment has been determined to be **1281** days. The USPTO will *sua sponte* issue a certificate of correction reflecting the amount of PTA days determined by the recalculation.

Prior to the issuance of the certificate of correction, the USPTO will afford patentee an opportunity to be heard and request reconsideration. Accordingly, patentee has **one month or thirty (30) days**, whichever is longer, to file a request for reconsideration of this patent term adjustment calculation. See 35 U.S.C. 154(b)(3)(B)(ii) and 37 CFR 1.322(a)(4). No extensions of time will be granted under 37 CFR 1.136.

Patentee should use document code PET.OP if electronically filing a request for reconsideration of this patent term adjustment calculation. The patentee must also include the information required by 37 CFR 1.705(b)(2) and the fee required by 37 CFR 1.18(e). If patentee does not file a timely request for reconsideration of this patent term adjustment calculation including the information required by 37 CFR 1.705(b)(2) and the fee required by 37 CFR 1.18(e), the USPTO will issue a certificate of correction reflecting the PTA determination noted above.

Patentee should be aware that in order to preserve the right to review in the United States District Court for the District of Columbia of the USPTO patent term adjustment determination, patentee must ensure that he or she also take the steps required under 35 U.S.C. 154(b)(4)(A) in a timely manner. Nothing in the request for recalculation should be construed as providing an alternative time frame for commencing a civil action under 35 U.S.C. 154(b)(4)(A).

Any questions concerning this decision should be directed to the Office of Patent Legal Administration at 571-272-7702.

UNITED STATES PATENT AND TRADEMARK OFFICE

Commissioner for Patents
United States Patent and Trademark Office
P. O. Box 1450
Alexandria, VA 22313-1450
www. uspto. gov

LEONARD TACHNER, A PROFESSIONAL LAW CORPORATION
17961 SKY PARK CIRCLE, SUITE 38-E
IRVINE, CA 92614

COPY MAILED
SEP 27 2006
OFFICE OF PETITIONS

In re Application of	:	
Guoping Shi	:	
Application No. 10/671,149	:	ON PETITION
Filed: September 23, 2003	:	
Attorney Docket No. FP03037-US	:	

This is a decision on the petition under 37 CFR 1.137(b), filed June 19, 2006, to revive the above-identified application.

The petition is **GRANTED**.

The above-identified application became abandoned for failure to reply in a timely manner to the non-final Office action mailed June 20, 2005, which set a shortened statutory period for reply of three (3) months. No extension of time under the provisions of 37 CFR 1.136(a) were obtained. Accordingly, the above-identified application became abandoned on September 21, 2005.

Telephone inquiries concerning this decision should be directed to Irvin Dingle at (571) 272-3210.

This matter is being referred to Technology Center AU 3724 for further processing.

Irvin Dingle
Petitions Examiner
Office of Petitions

UNITED STATES PATENT AND TRADEMARK OFFICE

UNITED STATES DEPARTMENT OF COMMERCE
United States Patent and Trademark Office
Address: COMMISSIONER FOR PATENTS
P.O. Box 1450
Alexandria, Virginia 22313-1450
www.uspto.gov

Tarolli, Sundheim, Covell & Tummino L.L.P.
Cisco Systems, Inc.
1300 East Ninth Street
Suite 1700
Cleveland, OH 44114

Mail Date: 04/21/2010

Applicant	: William E. Wall	: DECISION ON REQUEST FOR
Patent Number	: 7596801	: RECALCULATION of PATENT
Issue Date	: 09/29/2009	: TERM ADJUSTMENT IN VIEW
Appliction No	: 10/671,151	: OF WYETH AND NOTICE OF INTENT TO
Filed	: 09/25/2003	: ISSUE CERTIFICATE OF CORRECTION
		:

The Request for Recalculation is **GRANTED** to the extent indicated.

The patent term adjustment has been determined to be **1235** days. The USPTO will *sua sponte* issue a certificate of correction reflecting the amount of PTA days determined by the recalculation.

Prior to the issuance of the certificate of correction, the USPTO will afford patentee an opportunity to be heard and request reconsideration. Accordingly, patentee has **one month or thirty (30) days**, whichever is longer, to file a request for reconsideration of this patent term adjustment calculation. See 35 U.S.C. 154(b)(3)(B)(ii) and 37 CFR 1.322(a)(4). No extensions of time will be granted under 37 CFR 1.136.

Patentee should use document code PET.OP if electronically filing a request for reconsideration of this patent term adjustment calculation. The patentee must also include the information required by 37 CFR 1.705(b)(2) and the fee required by 37 CFR 1.18(e). If patentee does not file a timely request for reconsideration of this patent term adjustment calculation including the information required by 37 CFR 1.705(b)(2) and the fee required by 37 CFR 1.18(e), the USPTO will issue a certificate of correction reflecting the PTA determination noted above.

Patentee should be aware that in order to preserve the right to review in the United States District Court for the District of Columbia of the USPTO patent term adjustment determination, patentee must ensure that he or she also take the steps required under 35 U.S.C. 154(b)(4)(A) in a timely manner. Nothing in the request for recalculation should be construed as providing an alternative time frame for commencing a civil action under 35 U.S.C. 154(b)(4)(A).

Any questions concerning this decision should be directed to the Office of Patent Legal Administration at 571-272-7702.

UNITED STATES PATENT AND TRADEMARK OFFICE

UNITED STATES DEPARTMENT OF COMMERCE
United States Patent and Trademark Office
Address: COMMISSIONER FOR PATENTS
P.O. Box 1450
Alexandria, Virginia 22313-1450
www.uspto.gov

Tarolli, Sundheim, Covell & Tummino L.L.P.
Cisco Systems, Inc.
1300 East Ninth Street
Suite 1700
Cleveland, OH 44114

Mail Date: 05/18/2010

Applicant : William E. Wall
Patent Number : 7596801
Issue Date : 09/29/2009
Application No : 10/671,151
Filed : 09/25/2003

: NOTICE CONCERNING IMPROPER
: CALCULATION OF PATENT TERM
: ADJUSTMENT BASED UPON USPTO
: IMPROPERLY MEASURING REDUCTION
: PERIOD UNDER 37 CFR 1.704(c)(10).

The United States Patent and Trademark Office (USPTO) discovered that in processing the recent recalculation decisions mailed in response to patentee's filed Request for Recalculation of Patent Term Adjustment in view of Wyeth, the USPTO improperly measured the reduction period for reductions under 37 CFR 1.704(c)(10). Pursuant to 37 CFR 1.704(c)(10), patentee's reduction begins on the date of filing the amendment under 37 CFR 1.312 ("1.312 amendment") or other related paper and ends on the date that the Office mails a response to the filing of the 1.312 amendment or other paper. It has been discovered that during the recalculation, the calculation failed to the limit the reduction to the mail date of the response to the 1.312 amendment or other paper. Accordingly, patentee's reductions were greater than warranted.

This notice **VACATES** the previous GRANTED request for recalculation and provides patentee with a revised GRANTED recalculation.

The patent term adjustment has been determined to be **1270** days. The USPTO will *sua sponte* issue a certificate of correction reflecting the amount of patent term adjustment (PTA) days determined by the recalculation.

Prior to the issuance of the certificate of correction, the USPTO will afford patentee an opportunity to be heard and request reconsideration. Accordingly, patentee has **one month or thirty (30) days** from the mail date of this notice, whichever is longer, to file a request for reconsideration of this PTA calculation. See 35 U.S.C. § 154(b)(3)(B)(ii) and 37 CFR 1.322(a)(4).

Patentee should use document code PET.OP if electronically filing a request for reconsideration of this PTA calculation. The patentee must also include the information required by 37 CFR 1.705(b)(2), and the fee required by 37 CFR 1.18(e). If patentee does not file a timely request for reconsideration of this PTA calculation, including the information required by 37 CFR 1.705(b)(2) and the fee required by 37 CFR 1.18(e), the USPTO will issue a certificate of correction reflecting the PTA determination noted above.

Patentee should be aware that in order to preserve the right of review of the USPTO's PTA determination in the United States District Court for the District of Columbia, patentee must ensure that the steps required under 35 U.S.C. § 154 (b)(4) are taken in a timely manner. Nothing in the request for recalculation should be construed as providing an alternative time frame for commencing a civil action under 35 U.S.C. § 154(b)(4).

UNITED STATES PATENT AND TRADEMARK OFFICE

Commissioner for Patents
United States Patent and Trademark Office
P.O. Box 1450
Alexandria, VA 22313-1450
www.uspto.gov

TEXAS INSTRUMENTS INCORPORATED
P O BOX 655474, M/S 3999
DALLAS TX 75265

COPY MAILED

MAY 11 2007

OFFICE OF PETITIONS

In re Application of	:	
Suzanne Mary Vining	:	
Application No. 10/671,164	:	DECISION ON PETITION
Filed: September 25, 2003	:	
Attorney Docket No. TI-36371	:	

This is a decision on the petition under 37 CFR 1.137(b), filed August 22, 2006, to revive the above-identified application.

The petition is **GRANTED.**

The application became abandoned for failure to reply in a timely manner to the non-final Office action mailed January 25, 2006, which set a shortened statutory period for reply of three (3) months. No extensions of time were obtained under the provisions of 37 CFR 1.136(a). Accordingly, the application became abandoned on April 26, 2006.

The petition satisfies the requirements of 37 CFR 1.137(b) in that petitioner has supplied (1) the required reply in the form of an amendment, (2) the petition fee of $1,500, and (3) a proper statement of unintentional delay. Accordingly, the failure to timely reply to the non-final Office action of January 25, 2006 is accepted as being unintentionally delayed.

In view of the request for refund of the issue fee, the issue fee payment of December 1, 2005 will be refunded to petitioner's deposit account, as requested.

This application is being referred to Technology Center AU 2819 for appropriate action in the normal course of business on the reply received August 22, 2006.

Telephone inquiries concerning this decision should be directed to the undersigned at (571) 272-3218.

Frances Hicks

Frances Hicks
Petitions Examiner
Office of Petitions

UNITED STATES PATENT AND TRADEMARK OFFICE

Commissioner for Patents
United States Patent and Trademark Office
P. O. Box 1450
Alexandria, VA 22313-1450
www. uspto. gov

CORNING INCORPORATED
SP-T1-3-1
CORNING NY 14831

COPY MAILED

JUL 27 2006

OFFICE OF PETITIONS
ON PETITION

In re Application of :
Rodney I. Frost :
Application No. 10/671,166 :
Filed: September 25, 2003 :
Attorney Docket No. SP03-126

This is a decision on the petition filed, July 24, 2006 and resubmitted on July 25, 2006, under 37 CFR 1.313(c)(2) to withdraw the above-identified application from issue after payment of the issue fee.

The petition is **GRANTED**.

The above-identified application is withdrawn from issue for consideration of a submission under 37 CFR 1.114 (request for continued examination). See 37 CFR 1.313(c)(2).

Petitioner is advised that the issue fee paid on May 4, 2006 in the above-identified application cannot be refunded. If, however, the above-identified application is again allowed, petitioner may request that it be applied towards the issue fee required by the new Notice of Allowance.[1]

Telephone inquiries should be directed to the undersigned at (571) 272-3208.

This matter is being referred to Technology Center AU 1724 for processing of the request for continued examination under 37 CFR 1.114.

Karen Creasy

Karen Creasy
Petitions Examiner
Office of Petitions

---

[1] The request to apply the issue fee to the new Notice may be satisfied by completing and returning the new Issue Fee Transmittal Form PTOL-85(b), which includes the following language thereon: Commissioner for Patents is requested to apply the Issue Fee and Publication Fee (if any) or re-apply any previously paid issue fee to the application identified above. Petitioner is advised that, whether a fee is indicated as being due or not, the Issue Fee Transmittal Form **must** be completed and timely submitted to avoid abandonment. Note the language in bold text on the first page of the Notice of Allowance and Fee(s) Due (PTOL-85).

UNITED STATES PATENT AND TRADEMARK OFFICE

COMMISSIONER FOR PATENTS
UNITED STATES PATENT AND TRADEMARK OFFICE
P.O. BOX 1450
ALEXANDRIA, VA 22313-1450
www.uspto.gov

Paper No. _____

Date : July 27, 2006

TO : Director, Office of Patent Publication

FROM : Office of the Deputy Commissioner
for Patent Examination Policy

SUBJECT : Withdrawal from Issue of

Applicant(s) :Rodney I. Frost
Application No. :10/671,166
Filed :September 25, 2003

The above-identified application has been assigned Patent No. 7,087,099 and an issue date of August 8, 2006.

It is hereby directed that this application be withdrawn from issue at the request of the applicant.

Do not refund the issue fee.

The following erratum should be published in the Official Gazette if the above-identified application is published in the OG of August 8, 2006:

"All reference to Patent No. 7,087,099 to Rodney I. Frost of New York for ASYMMETRIC HONEYCOMB WALL-FLOW FILTER HAVING IMPROVED STRUCTURAL STRENGTH appearing in the Official Gazette of August 8, 2006 should be deleted since no patent was granted."

Karen Creasy

Karen Creasy
Petitions Examiner
Office of Petitions
Office of the Deputy Commissioner
for Patent Examination Policy

cc: Paul Harrison, MDW-4B03,(FAX-273-5468)
Deneise Boyd, MDE-3D39 (FAX-273-5124)
Mary Louise McAskill, ST-8C15 (FAX 305-4372)
Niomi Farmer, ST-8C14 (FAX-305-4372)
Mary E. Johnson (Cookie), MDE-7C71 (FAX 273-0038
Duane Davis P/OPC MDE-7D89

UNITED STATES PATENT AND TRADEMARK OFFICE

Commissioner for Patents
United States Patent and Trademark Office
P.O. Box 1450
Alexandria, VA 22313-1450
www.uspto.gov

062005

MULE LIGHTING
46 BAKER STREET
PROVIDENCE, RI 02908

SEP 0 8 2005

In re Application of: ROBERT PORTER CROSS ET AL. Serial No.: 10/671,167 Filed: 25 September 2003 Docket: MUL-0005-D1	: : : : :	DECISION ON PETITION TO WITHDRAW HOLDING OF ABANDONMENT

This is a decision on the petition filed on May 27, 2005, and supplemented on June 24, 2005 and on June 28, 2005, via facsimile transmission, to withdraw the holding of abandonment of the above-identified application under 37 C.F.R. § 1.181.

The petition to withdraw the holding of abandonment is **GRANTED**.

An Office action (a non-final rejection) was mailed August 24, 2004, setting a three-month shortened statutory period for reply. In the absence of receipt of a response, the case became abandoned as a matter of law at the end of the period for reply, which could not extend past February 24, 2005.

Petitioner asserts that applicant did not receive the Office Action. In support of the assertion, petitioner submitted as evidence of lack of receipt of the Office action: 1) a statement from the practitioner stating that the Office communication was not received by the practitioner and attesting to the fact that a search of the docket report indicates that the Office communication was not received, and 2) a copy of the file jacket. The petition was timely filed in response to petitioner's telephone inquiry of May 9, 2005, which provided petitioner with notice that no response had been received. Petitioner supplied supplemental information on June 24, 2005, in response to a telephone inquiry, detailing petitioner's receipt and docket recording procedures. Petitioner further submitted an affidavit by Robert Cross, who attests that he has primary responsibility for attending to all correspondence from the Office, and that the Office communication was not received.

A review of the file record indicates no irregularity in the mailing of the Notice, and in the absence of any irregularity there is a strong presumption that the Notice was properly mailed to

practitioner at the address of record. This presumption may be overcome by a showing that the Notice was not in fact received. The showing required to establish the failure to receive an Office action must include a statement from the practitioner stating that the practitioner did not receive the Office action and attesting to the fact that a search of the file jacket and docket records indicates that the Office action was not received. A copy of the docket record where the non-received Office action would have been entered had it been received and docketed must be attached to and referenced in practitioner's statement. See "Withdrawing the Holding of Abandonment When Office Actions Are Not Received" 1156 Official Gazette 53 (November 16, 1993) and M.P.E.P. § 711.03(c).

Although no docket records were kept by petitioner, the petition is accompanied by an affidavit by Robert H. Cross, who is responsible for attending to all correspondences received from the Office at the address of record, attesting that the Office action was not received because had it been received, it would have been matched to the appropriately labeled folder, a notation would have been entered on the file jacket, and a copy would have been forwarded to their attorney. Petitioner's detailed affidavit of the reasonable recording procedures, timely filed statement and evidentiary support meet the criteria set forth in M.P.E.P. § 711.03(c), and provide a showing that the Office action was not received.

Petitioner is advised to keep detailed records of all communications received from the Office, including the use of a docketing log in which all communications for all of petitioner's applications are entered upon receipt. As M.P.E.P. § 711.03(c) further states:

> The showing outlined above may not be sufficient if there are circumstances that point to a conclusion that the Office action may have been lost after receipt rather than a conclusion that the Office action was lost in the mail (e.g., if the practitioner has a history of not receiving Office actions).

The holding of abandonment is therefore withdrawn and the Notice of Abandonment vacated. The Office action (non-final rejection) shall be remailed with the period for response reset to run three months from the date the action is remailed. Extension of this period is governed by 37 C.F.R. § 1.136(a).

Any inquiry regarding this decision should be directed to Hien H. Phan, Special Program Examiner, at (571) 272-1606.

James L. Dwyer, Group Director
Technology Center 2800 - Semiconductors,
Electrical & Optical Systems & Components

UNITED STATES PATENT AND TRADEMARK OFFICE

COMMISSIONER FOR PATENTS
UNITED STATES PATENT AND TRADEMARK OFFICE
P.O. BOX 1450
ALEXANDRIA, VA 22313-1450
WWW.USPTO.GOV

Paper No. None

MICHAEL A. SHIPPEY, PH. D.
4848 LAKEVIEW AVENUE
SUITE B
YORBA LINDA CA 92886

COPY MAILED

MAR 21 2006

OFFICE OF PETITIONS

In re Application of	:	
Donna Hougland	:	
Application No. 10/671,178	:	DECISION ON PETIITON
Filed: September 25, 2003	:	UNDER 37 C.F.R. §1.137(b)
Attorney Docket No. 127.01-P-USA	:	
Title: TRANSITIONAL FEEDING UTENSIL	:	

This is a decision on the petition filed January 4, 2006, pursuant to 37 C.F.R. §1.137(b)[1], to revive the above-identified application.

The above-identified application became abandoned for failure to reply in a timely manner to the non-final Office action, mailed September 22, 2004, which set a shortened statutory period for reply of three (3) months. No response was received, and no extensions of time under the provisions of 37 C.F.R. §1.136(a) were requested. Accordingly, the above-identified application became abandoned on December 23, 2004. A notice of abandonment was mailed on April 21, 2005.

---

1 A grantable petition pursuant to 37 CFR 1.137(b) must be accompanied by:
(1) The reply required to the outstanding Office action or notice, unless previously filed;
(2) The petition fee as set forth in § 1.17(m);
(3) A statement that the entire delay in filing the required reply from the due date for the reply until the filing of a grantable petition pursuant to this paragraph was unintentional. The Commissioner may require additional information where there is a question whether the delay was unintentional, and;
(4) Any terminal disclaimer (and fee as set forth in § 1.20(d)) required pursuant to paragraph (d) of this section.

37 C.F.R. §1.137(b)(3) requires a statement that the entire delay in filing the required reply from the due date for the reply until the filing of a grantable petition pursuant to 37 C.F.R. §1.137(b) was unintentional. Since the statement contained in the instant petition varies from the language required by 37 C.F.R. §1.137(b)(3), the statement contained in the instant petition is being construed as the statement required by 37 C.F.R. §1.137(b)(3) and petitioner must notify the Office if this is not a correct interpretation of the statement contained in the instant petition.

With this petition, Petitioner has submitted the petition fee, an amendment, and a statement which is being construed as the proper statement of unintentional delay. A terminal disclaimer is not required.

As such, this petition under 37 C.F.R. §1.137(b) is **GRANTED**.

The Technology Center will be made aware of this decision.

Telephone inquiries regarding this decision should be directed to the undersigned at (571) 272-3225. All other inquiries concerning examination procedures or status of the application should be directed to the Technology Center.

Paul Shanoski

Paul Shanoski
Senior Attorney
Office of Petitions
United States Patent and Trademark Office

UNITED STATES PATENT AND TRADEMARK OFFICE

COMMISSIONER FOR PATENTS
UNITED STATES PATENT AND TRADEMARK OFFICE
P.O. BOX 1450
ALEXANDRIA, VA 22313-1450
www.uspto.gov

Paper No.

BIRCH STEWART KOLASCH & BIRCH
PO BOX 747
FALLS CHURCH, VA 22040-0747

COPY MAILED

SEP 2 2 2004

OFFICE OF PETITIONS

In re Application of	:	
Takeru Watanabe	:	
Application No. 10/671,191	:	
Filed: September 29, 2003	:	ON PETITION
Attorney Docket Number:	:	
0171-1021P	:	

This is a decision on the Petition in Response to Notice to File Corrected Application Papers, filed July 12, 2004, requesting the above-identified application be accorded a filing date of September 29, 2003, including pages 45 - 47 of the specification.

The petition is **granted**.

The application was filed on September 29, 2003. However, on June 7, 2004, the Office of Initial Patent Examination mailed a Notice to File Corrected Application Papers ("Notice"), informing Applicant that the application had been accorded a filing date; however, pages 45 - 47 of the specification and an abstract appeared to have been omitted from the application.

In response, Petitioner files the instant petition wherein Petitioner avers that pages pages 45 - 47 of the specification were included among 47 pages of Specification filed initially, on September 29, 2003, and were received by this Office as evidenced by the return-receipt postcard. In support, Petitioner provides a copy of a return receipt postcard acknowledging receipt of, *intern alia*, 47 pages of Specification filed on September 29, 2003.

A review of the return receipt postcard reveals that Petitioner is correct. The postcard acknowledges receipt of 47 pages of Specification by this Office on September 29, 2003. Petitioner has also re-submitted pages 45 - 47 of the specification, including an abstract, with the instant petition.

Evidence of receipt of any correspondence filed in the Patent and Trademark Office can be obtained by submitting a self-addressed postcard properly itemizing and identifying the paper or papers being filed. Upon receipt of the correspondence, the Patent and Trademark Office will check the listing on the post card against the papers submitted, making sure that all items listed are present and will then stamp the postcard with an Official date stamp and place the postcard in the outgoing mail. "A postcard receipt which itemizes and properly identifies the papers which are being filed serves as *prima facie* evidence of receipt in the PTO of all items listed thereon by the PTO." MPEP § 503.

Accordingly, the petition is granted The copy of pages 45 - 47 of the specification, supplied with the instant petition on July 12, 2004, will be used for examination purposes.

A refund of the petition fee has been credited to deposit account 02-2448 as authorized in the instant petition.

The application will be returned to the Office of Initial Patent Examination for further processing as a nonprovisional application with a filing date of September 29, 2003, and an indication that pages 45 - 47 of the Specification, including an abstract, were included among 47 pages of Specification that were present on filing on September 29, 2003.

Telephone inquiries concerning this matter should be directed to Petitions Attorney Derek L. Woods at (703) 305-0014.

Derek L. Woods
Petitions Attorney
Office of Petitions

UNITED STATES PATENT AND TRADEMARK OFFICE

Commissioner for Patents
United States Patent and Trademark Office
P.O. Box 1450
Alexandria, VA 22313-1450
www.uspto.gov

Max Moskowitz
OSTROLENK, FABER,
GERB & SOFFEN, LLP
1180 Avenue of the Americans
New York, New York 10036-8403

MAILED

DEC 16 2005

TECHNOLOGY CENTER 2100

In re Application of:
Peter KASSAN
Application No. 10/671,194
Filed: September 25, 2003
For: SYSTEM FOR PRODUCING ON-LINE CONTENT FROM WEB SITES ON DEMAND

DECISION ON PETITION TO MAKE SPECIAL

This is a decision on the petition, filed on November 05, 2004 under 37 C.F.R. §102(d) and M.P.E.P. § 708.02(VIII): Accelerated Examination, to make the above-identified application special.

The petition is **GRANTED**.

M.P.E.P. § 708.02, Section VIII which sets out the prerequisites for a grantable petition for Accelerated Examination under 37 C.F.R. § 102(d) states in relevant part:

> A new application (one which has not received any examination by the examiner) may be granted special status provided that applicant (and this term includes applicant's attorney or agent) complies with each of the following items:
>
> (A) Submits a petition to make special accompanied by the fee set forth in 37 CFR 1.17(h);
>
> (B) Presents all claims directed to a single invention, or if the Office determines that all the claims presented are not obviously directed to a single invention, will make an election without traverse as a prerequisite to the grant of special status;
>
> (C) Submits a statement(s) that a pre-examination search was made, listing the field of search by class and subclass, publication, Chemical Abstracts, foreign patents, etc. A search made by a foreign patent office satisfies this requirement;
>
> (D) Submits one copy each of the references deemed most closely related to the subject matter encompassed by the claims if said references are not already of record; and
>
> (E) Submits a detailed discussion of the references, which discussion points out, with the particularity required by 37 CFR 1.111 (b) and (c), how the claimed subject matter is patentable over the references.

Applicant's submission of November 05, 2004 meets all the criteria set out above. Accordingly, the petition is **GRANTED**. The application file is being forwarded to the Examiner for accelerated examination in accordance with M.P.E.P. § 708.02. If the application is subsequently allowed, it will be given priority for printing. See M.P.E.P. § 1309.

Vincent N. Trans
Special Program Examiner
Technology Center 2100
Computer Architecture, Software, and
Information Security
571-272-3613

UNITED STATES PATENT AND TRADEMARK OFFICE

COMMISSIONER FOR PATENTS
UNITED STATES PATENT AND TRADEMARK OFFICE
P.O. BOX 1450
ALEXANDRIA, VA 22313-1450
www.uspto.gov

DARBY & DARBY P.C.
P. O. BOX 5257
NEW YORK, NY 10150-5257

COPY MAILED

SEP 14 2004

OFFICE OF PETITIONS

In re Application of :
Hirotaka Shibata, et al. :
Application No. 10/671,248 :
Filed: September 24, 2003 :
Attorney Docket No. 09856/000N030-US0 :

ON PETITION

This is a decision on the petition, filed August 27, 2004, under 37 CFR 1.313(c)(2) to withdraw the above-identified application from issue after payment of the issue fee.

The petition is **GRANTED**.

The above-identified application is withdrawn from issue for consideration of a submission under 37 CFR 1.114 (request for continued examination). See 37 CFR 1.313(c)(2).

Petitioner is advised that the issue fee paid on June 23, 2004 in the above-identified application cannot be refunded. If, however, the above-identified application is again allowed, petitioner may request that it be applied towards the issue fee required by the new Notice of Allowance. [1]

Telephone inquiries relating to this decision should be directed to the undersigned at (703) 305-9220.

The application is being referred to Technology Center AU 3611 for further processing of the request for continued examination under 37 CFR 1.114 filed August 27, 2004.

Sherry D. Brinkley
Petitions Examiner
Office of Petitions
Office of the Deputy Commissioner
for Patent Examination Policy

[1]The request to apply the issue fee to the new Notice may be satisfied by completing and returning the new Issue Fee Transmittal Form PTOL-85(b), which includes the following language thereon: " Commissioner for Patents is requested to apply the Issue Fee and Publication Fee (if any) or re-apply any previously paid issue fee to the application identified above." Petitioner is advised that, whether a fee is indicated as being due or not, the Issue Fee Transmittal Form **must** be completed and timely submitted to avoid abandonment. Note the language in bold text on the first page of the Notice of Allowance and Fee(s) Due (PTOL-85).

UNITED STATES PATENT AND TRADEMARK OFFICE

Commissioner for Patents
United States Patent and Trademark Office
P.O. Box 1450
Alexandria, VA 22313-1450
www.uspto.gov

JONES DAY
222 EAST 41ST ST
NEW YORK NY 10017

COPY MAILED

JUL 23 2008

In re Application of	:	
Bray et al.	:	
Application No. 10/671,282	:	DECISION ON PETITION
Filed: September 24, 2003	:	
Attorney Docket No. TRM-004	:	

This is a decision on the petition under the unintentional provisions of 37 CFR 1.137(b), filed June 25, 2008, to revive the above-identified application.

The petition is **GRANTED**.

The application became abandoned for failure to reply in a timely manner to the Non-Final Rejection mailed, June 05, 2007, which set a shortened statutory period for reply of three (3) months. No extensions of time under the provisions of 37 CFR 1.136 (a) were obtained. Accordingly, the application became abandoned on September 6, 2007.

The petition satisfies the requirements of 37 CFR 1.137(b) in that petitioner has supplied (1) the reply in the form of an Amendment After Non-Final, (2) the petition fee of $1540, and (3) an adequate statement of unintentional delay.

Telephone inquiries concerning this decision should be directed to Denise Williams at (571) 272-8930.

This application is being referred to Technology Center AU 1648 for appropriate action by the Examiner in the normal course of business on the reply received.

Andrea Smith
Petitions Examiner
Office of Petitions

UNITED STATES PATENT AND TRADEMARK OFFICE

Commissioner for Patents
United States Patent and Trademark Office
P.O. Box 1450
Alexandria, VA 22313-1450
www.uspto.gov

Siemens Corporation
Intellectual Property Department
170 Wood Avenue South
Iselin, NJ 08830

COPY MAILED

JUN 14 2007

OFFICE OF PETITIONS

In re Application of	:	
George Liang	:	
Application No. 10/671,291	:	ON PETITION
Filed: September 25, 2003	:	
Attorney Docket No. 2003P14216US	:	

This is a decision on the petition under 37 CFR 1.137(b), filed on April 3, 2006, to revive the above-identified application. The delay in responding is sincerely regretted.

The application became abandoned for failure to respond to the final Office action mailed August 30, 2005.

The petition satisfies the requirements of 37 CFR 1.137(b) in that petitioner has supplied (1) the reply in the form of a Request for Continued Examination (RCE) under 37 CFR 1.114 with the $790 filing fee; (2) the petition fee of $1,500; and (3) an adequate statement of unintentional delay. Therefore, the petition is **GRANTED**.

This application is being revived for consideration of the RCE.

The application file is being referred to Technology Center Art Unit 3673, for review of the amendment previously submitted on January 30, 2006.

Telephone inquiries concerning this decision should be directed to the undersigned at (571) 272-3226.

Andrea Smith
Petitions Examiner
Office of Petitions

UNITED STATES PATENT AND TRADEMARK OFFICE

UNDER SECRETARY OF COMMERCE FOR INTELLECTUAL PROPERTY AND
DIRECTOR OF THE UNITED STATES PATENT AND TRADEMARK OFFICE
WASHINGTON, DC 20231
www.uspto.gov

SEP 14 2004

Dane C. Butzer
681 Woodduck Ct.
Columbus, OH 43215

MAILED

SEP 14 2004

OFFICE OF THE DIRECTOR
TC 3600

In re application of
David Holden
Application No. 10/671,300
Filed: September 24, 2000
For: J-CLIP

: DECISION ON REQUEST
: FOR WITHDRAWAL OF
: ATTORNEY

This is a decision on the request filed on January 30, 2004, under 37 CFR 1.36 and MPEP 402.06, requesting permission to withdraw as the attorney of record in the above-identified application.

The request is **NOT APPROVED**.

Under 37 CFR 1.36 an attorney may withdraw only upon application to and approval by the Commissioner. It should be noted that a withdrawal is effective when approved, not when filed. Besides giving due notice to his or her client and delivering to the client all papers and property to which the client is entitled as specified under 37 CFR 10.40, approval of such a request requires that the following conditions be met:

A) Each attorney of record must sign the notice of withdrawal, or the notice must contain a clear indication of one attorney signing on behalf of another, because the Office does not recognize law firms;

B) A proper reason for the withdrawal as enumerated in 37 CFR 10.40(b) or subsection (1)-(6) of 37 CFR 10.40(c) must be provided; and

C) If withdrawal is requested in accordance with 37 CFR 10.40(c) above, there must be at least 30 days between approval of the withdrawal and the later of the expiration date of a time period for reply or the expiration date of the period which can be obtained by a petition and fee for extension of time under 37 CFR 1.136(a).

The request to withdraw as attorney in the above-identified application is not approved because the attorney signing the request does not now have power of attorney in this application.

Kenneth J. Dorner
Special Programs Examiner
Patent Technology Center 3600
(703) 308-0866
Facsimile No.: (703) 605-0586

KJD/slb: 09/09/04

UNITED STATES PATENT AND TRADEMARK OFFICE

Commissioner for Patents
United States Patent and Trademark Office
P.O. Box 1450
Alexandria, VA 22313-1450
www.uspto.gov

SCHULTE ROTH & ZABEL LLP
ATTN: JOEL E. LUTZKER
919 THIRD AVENUE
NEW YORK, NY 10022

COPY MAILED
DEC 0 7 2006
OFFICE OF PETITIONS

In re Application of Yajima	:	
Application No. 10/671,310	:	Decision on Petition
Filing Date: September 25, 2003	:	
Attorney Docket No. 848075/0057	:	

This is a decision on the petition under 37 CFR 1.181, filed August 17, 2006, to withdraw the holding of abandonment.

The petition is **granted.**

A final Office action was mailed February 3, 2006.

As of August 10, 2006, a reply had not been matched with the file. As a result, a Notice of Abandonment was mailed August 10, 2006.

Petitioner contends a Notice of Appeal was timely filed.

A review of the file indicates a Notice of Appeal and request for a three-month extension of time have been matched with the file. Both papers were filed August 3, 2006. Therefore, the application is not abandoned.

The Notice of Abandonment is hereby vacated and the holding of abandonment withdrawn.

The Notice of Appeal filed August 17, 2006, has been entered and made of record. Accordingly, the 2-month period for filing the appeal brief, in triplicate, accompanied by the fee required by law, runs from the date of this decision.

Technology Center Art Unit 2617 will be informed of the instant decision and will take further action upon petitioner filing an Appeal Brief or Request for Continued Examination.

Telephone inquiries regarding this communication should be directed to Petitions Attorney Steven Brantley at (571) 272-3203.

Charles Steven Brantley
Senior Petitions Attorney
Office of Petitions

SPE RESPONSE FOR CERTIFICATE OF CORRECTION

Paper No.: _____

DATE : 4/5/06

TO SPE OF : ART UNIT 2136

SUBJECT : Request for Certificate of Correction for Appl. No.: 10621319 Patent No.: 6986049

Please respond to this request for a certificate of correction within 7 days.

Please review the requested changes/corrections as shown in the **COCIN** document(s) in the IFW application image. No new matter should be introduced, nor should the scope or meaning of the claims be changed.

Please complete the response (see below) and forward the completed response to scanning using document code **COCX**.

Valerie Jackson
Certificates of Correction Branch
703-308-9390 ext. 114

Thank You For Your Assistance

The request for issuing the above-identified correction(s) is hereby:

Note your decision on the appropriate box.

- ☒ **Approved** — All changes apply.
- ☐ **Approved in Part** — Specify below which changes **do not** apply.
- ☐ **Denied** — State the reasons for denial below.

Comments: _____

NASSER MOAZZAMI
SUPERVISORY PATENT EXAMINER
TECHNOLOGY CENTER 2100

SPE : 2136 **Art Unit**

PTOL-306 (REV. 7/03)

U.S. DEPARTMENT OF COMMERCE Patent and Trademark Office

SPE RESPONSE FOR CERTIFICATE OF CORRECTION

Paper No.: _____

DATE : 4/5/06

TO SPE OF : ART UNIT 2136

SUBJECT : Request for Certificate of Correction for Appl. No.: 10621319 Patent No.: 6986049

Please respond to this request for a certificate of correction within 7 days.

Please review the requested changes/corrections as shown in the **COCIN** document(s) in the IFW application image. No new matter should be introduced, nor should the scope or meaning of the claims be changed.

Please complete the response (see below) and forward the completed response to scanning using document code **COCX**.

Valerie Jackson
Certificates of Correction Branch
703-308-9390 ext. 114

Thank You For Your Assistance

The request for issuing the above-identified correction(s) is hereby:
Note your decision on the appropriate box.

- [x] **Approved** — All changes apply.
- [ ] **Approved in Part** — Specify below which changes **do not** apply.
- [ ] **Denied** — State the reasons for denial below.

Comments: _____

NASSER MOAZZAMI
SUPERVISORY PATENT EXAMINER
TECHNOLOGY CENTER 2100

SPE **Art Unit** 2136

PTOL-306 (REV. 7/03)
U.S. DEPARTMENT OF COMMERCE Patent and Trademark Office

SPE RESPONSE FOR CERTIFICATE OF CORRECTION

Paper No.: _____

DATE : 02/01/10

TO SPE OF : ART UNIT 3694

SUBJECT : Request for Certificate of Correction for Appl. No 10/671,320.: 7606760B2

Please respond to this request for a certificate of correction within 7 days.

FOR IFW FILES:

Please review the requested changes/corrections as shown in the **COCIN** document(s) in the IFW application image. No new matter should be introduced, nor should the scope or meaning of the claims be changed.

Please complete the response (see below) and forward the completed response to scanning using document code **COCX**.

FOR PAPER FILES:

Please review the requested changes/corrections as shown in the attached certificate of correction. Please complete this form (see below) and forward it with the file to:

Certificates of Correction Branch (CofC)

Should the change(s) Be made?

RoChaun Johnson
Certificates of Correction Branch
571 272-0470

Thank You For Your Assistance

The request for issuing the above-identified correction(s) is hereby:

Note your decision on the appropriate box.

- [x] **Approved** — All changes apply.
- [ ] **Approved in Part** — Specify below which changes **do not** apply.
- [ ] **Denied** — State the reasons for denial below.

Comments: _____

3692

SPE **Art Unit**

UNITED STATES PATENT AND TRADEMARK OFFICE

UNITED STATES DEPARTMENT OF COMMERCE
United States Patent and Trademark Office
Address: COMMISSIONER FOR PATENTS
P.O. Box 1450
Alexandria, Virginia 22313-1450
www.uspto.gov

CHRISTENSEN, O'CONNOR, JOHNSON, KINDNESS, PLLC
1420 FIFTH AVENUE
SUITE 2800
SEATTLE, WA 98101-2347

Mail Date: 04/20/2010

Applicant	: Robin B. Hutchison	: DECISION ON REQUEST FOR
Patent Number	: 7606760	: RECALCULATION of PATENT
Issue Date	: 10/20/2009	: TERM ADJUSTMENT IN VIEW
Appliction No	: 10/671,320	: OF WYETH AND NOTICE OF INTENT TO
Filed	: 09/24/2003	: ISSUE CERTIFICATE OF CORRECTION
		:

The Request for Recalculation is **GRANTED** to the extent indicated.

The patent term adjustment has been determined to be **1623** days. The USPTO will *sua sponte* issue a certificate of correction reflecting the amount of PTA days determined by the recalculation.

Prior to the issuance of the certificate of correction, the USPTO will afford patentee an opportunity to be heard and request reconsideration. Accordingly, patentee has **one month or thirty (30) days**, whichever is longer, to file a request for reconsideration of this patent term adjustment calculation. See 35 U.S.C. 154(b)(3)(B)(ii) and 37 CFR 1.322(a)(4). No extensions of time will be granted under 37 CFR 1.136.

Patentee should use document code PET.OP if electronically filing a request for reconsideration of this patent term adjustment calculation. The patentee must also include the information required by 37 CFR 1.705(b)(2) and the fee required by 37 CFR 1.18(e). If patentee does not file a timely request for reconsideration of this patent term adjustment calculation including the information required by 37 CFR 1.705(b)(2) and the fee required by 37 CFR 1.18(e), the USPTO will issue a certificate of correction reflecting the PTA determination noted above.

Patentee should be aware that in order to preserve the right to review in the United States District Court for the District of Columbia of the USPTO patent term adjustment determination, patentee must ensure that he or she also take the steps required under 35 U.S.C. 154(b)(4)(A) in a timely manner. Nothing in the request for recalculation should be construed as providing an alternative time frame for commencing a civil action under 35 U.S.C. 154(b)(4)(A).

Any questions concerning this decision should be directed to the Office of Patent Legal Administration at 571-272-7702.

UNITED STATES PATENT AND TRADEMARK OFFICE

Commissioner for Patents
United States Patent and Trademark Office
P.O. Box 1450
Alexandria, VA 22313-1450
www.uspto.gov

JAN 10 2005

TESTA, HURWITZ & THIBEAULT, LLP
HIGH STREET TOWER
125 HIGH STREET
BOSTON MA 02110

In re Application of	:
Deping Wanget al	:
Serial No.: 10/671,326	: PETITION TO MAKE SPECIAL
Filed: September 25, 2003	:
Attorney Docket No.: RIB-007	:

This is in response to the petition filed April 28, 2004, to make the above-identified application special under the provisions of 37 CFR 1.102(d). The delay in acting on this petition was the delay in processing through the Office of Initial Patent Examination.

Applicant has satisfied the provisions set forth in M.P.E.P. 708.02, XII. Therefor the petition is **GRANTED**.

Should there be any questions with regard to this letter please contact William R. Dixon, Jr. by letter addressed to the Director, Technology Center 1600, P.O. Box 1450, Alexandria, VA 22313-1450, or by telephone at 571-272-0519 or by facsimile transmission at 703-872-9306.

William R. Dixon, Jr.
Special Program Examiner
Technology Center 1600

UNITED STATES PATENT AND TRADEMARK OFFICE

Commissioner for Patents
United States Patent and Trademark Office
P.O. Box 1450
Alexandria, VA 22313-1450
www.uspto.gov

HAMILTON, BROOK, SMITH & REYNOLDS, P.C.
530 VIRGINIA ROAD
P.O. BOX 9133
CONCORD, MA 01742-9133

COPY MAILED

FEB 1 8 2009

OFFICE OF PETITIONS

In re Application of	:	
Joaquin Blaya, et al.	:	
Application No. 10/671,329	:	DECISION ON PETITION
Filed: September 25, 2003	:	
Attorney Docket No. 0050.2061-000	:	

This is a decision on the petition under 37 CFR 1.182, filed November 19, 2008, to change the order of the names of the inventors.

The petition is **GRANTED**.

Office records have been corrected to reflect the change in the order of the named inventors. A corrected Filing Receipt, which sets forth the desired order of the named inventors, accompanies this decision on petition.

This application is being referred to Technology Center AU 3762 for further processing

Telephone inquires related to this decision should be directed to the undersigned at (571) 272-3204. Inquiries relating to the status or further prosecution of the application should be directed to the Technology Center.

Sherry D. Brinkley
Petitions Examiner
Office of Petitions

ATTACHMENT: Corrected Filing Receipt

UNITED STATES PATENT AND TRADEMARK OFFICE

UNITED STATES DEPARTMENT OF COMMERCE
United States Patent and Trademark Office
Address: COMMISSIONER FOR PATENTS
P.O. Box 1450
Alexandria, Virginia 22313-1450
www.uspto.gov

APPLICATION NUMBER	FILING or 371(c) DATE	GRP ART UNIT	FIL FEE REC'D	ATTY.DOCKET.NO	TOT CLAIMS	IND CLAIMS
10/671,329	09/25/2003	3762	1684	0050.2061-000	24	4

CONFIRMATION NO. 5686

CORRECTED FILING RECEIPT

21005
HAMILTON, BROOK, SMITH & REYNOLDS, P.C.
530 VIRGINIA ROAD
P.O. BOX 9133
CONCORD, MA 01742-9133

OC000000034558794

Date Mailed: 02/13/2009

Receipt is acknowledged of this non-provisional patent application. The application will be taken up for examination in due course. Applicant will be notified as to the results of the examination. Any correspondence concerning the application must include the following identification information: the U.S. APPLICATION NUMBER, FILING DATE, NAME OF APPLICANT, and TITLE OF INVENTION. Fees transmitted by check or draft are subject to collection. Please verify the accuracy of the data presented on this receipt. **If an error is noted on this Filing Receipt, please submit a written request for a Filing Receipt Correction. Please provide a copy of this Filing Receipt with the changes noted thereon. If you received a "Notice to File Missing Parts" for this application, please submit any corrections to this Filing Receipt with your reply to the Notice. When the USPTO processes the reply to the Notice, the USPTO will generate another Filing Receipt incorporating the requested corrections**

Applicant(s)

Joaquin Blaya, Santiago, CHILE;
Hugh Herr, Somerville, MA;
Gill A. Pratt, Lexington, MA;

Assignment For Published Patent Application

Massachusetts Institute of Technology, Cambridge, MA

Power of Attorney:
Erik Ence--42511

Domestic Priority data as claimed by applicant

Foreign Applications

If Required, Foreign Filing License Granted: 12/17/2003

The country code and number of your priority application, to be used for filing abroad under the Paris Convention, is **US 10/671,329**

Projected Publication Date: Not Applicable

Non-Publication Request: No

Early Publication Request: No
**** SMALL ENTITY ****

Title

Active Ankle Foot Orthosis

Preliminary Class

607

PROTECTING YOUR INVENTION OUTSIDE THE UNITED STATES

Since the rights granted by a U.S. patent extend only throughout the territory of the United States and have no effect in a foreign country, an inventor who wishes patent protection in another country must apply for a patent in a specific country or in regional patent offices. Applicants may wish to consider the filing of an international application under the Patent Cooperation Treaty (PCT). An international (PCT) application generally has the same effect as a regular national patent application in each PCT-member country. The PCT process **simplifies** the filing of patent applications on the same invention in member countries, but **does not result** in a grant of "an international patent" and does not eliminate the need of applicants to file additional documents and fees in countries where patent protection is desired.

Almost every country has its own patent law, and a person desiring a patent in a particular country must make an application for patent in that country in accordance with its particular laws. Since the laws of many countries differ in various respects from the patent law of the United States, applicants are advised to seek guidance from specific foreign countries to ensure that patent rights are not lost prematurely.

Applicants also are advised that in the case of inventions made in the United States, the Director of the USPTO must issue a license before applicants can apply for a patent in a foreign country. The filing of a U.S. patent application serves as a request for a foreign filing license. The application's filing receipt contains further information and guidance as to the status of applicant's license for foreign filing.

Applicants may wish to consult the USPTO booklet, "General Information Concerning Patents" (specifically, the section entitled "Treaties and Foreign Patents") for more information on timeframes and deadlines for filing foreign patent applications. The guide is available either by contacting the USPTO Contact Center at 800-786-9199, or it can be viewed on the USPTO website at http://www.uspto.gov/web/offices/pac/doc/general/index.html.

For information on preventing theft of your intellectual property (patents, trademarks and copyrights), you may wish to consult the U.S. Government website, http://www.stopfakes.gov. Part of a Department of Commerce initiative, this website includes self-help "toolkits" giving innovators guidance on how to protect intellectual property in specific countries such as China, Korea and Mexico. For questions regarding patent enforcement issues, applicants may call the U.S. Government hotline at 1-866-999-HALT (1-866-999-4158).

LICENSE FOR FOREIGN FILING UNDER

Title 35, United States Code, Section 184

Title 37, Code of Federal Regulations, 5.11 & 5.15

GRANTED

The applicant has been granted a license under 35 U.S.C. 184, if the phrase "IF REQUIRED, FOREIGN FILING LICENSE GRANTED" followed by a date appears on this form. Such licenses are issued in all applications where the conditions for issuance of a license have been met, regardless of whether or not a license may be required as

set forth in 37 CFR 5.15. The scope and limitations of this license are set forth in 37 CFR 5.15(a) unless an earlier license has been issued under 37 CFR 5.15(b). The license is subject to revocation upon written notification. The date indicated is the effective date of the license, unless an earlier license of similar scope has been granted under 37 CFR 5.13 or 5.14.

This license is to be retained by the licensee and may be used at any time on or after the effective date thereof unless it is revoked. This license is automatically transferred to any related applications(s) filed under 37 CFR 1.53(d). This license is not retroactive.

The grant of a license does not in any way lessen the responsibility of a licensee for the security of the subject matter as imposed by any Government contract or the provisions of existing laws relating to espionage and the national security or the export of technical data. Licensees should apprise themselves of current regulations especially with respect to certain countries, of other agencies, particularly the Office of Defense Trade Controls, Department of State (with respect to Arms, Munitions and Implements of War (22 CFR 121-128)); the Bureau of Industry and Security, Department of Commerce (15 CFR parts 730-774); the Office of Foreign AssetsControl, Department of Treasury (31 CFR Parts 500+) and the Department of Energy.

NOT GRANTED

No license under 35 U.S.C. 184 has been granted at this time, if the phrase "IF REQUIRED, FOREIGN FILING LICENSE GRANTED" DOES NOT appear on this form. Applicant may still petition for a license under 37 CFR 5.12, if a license is desired before the expiration of 6 months from the filing date of the application. If 6 months has lapsed from the filing date of this application and the licensee has not received any indication of a secrecy order under 35 U.S.C. 181, the licensee may foreign file the application pursuant to 37 CFR 5.15(b).

UNITED STATES PATENT AND TRADEMARK OFFICE

Commissioner for Patents
United States Patent and Trademark Office
P.O. Box 1450
Alexandria, VA 22313-1450
www.uspto.gov

HAMILTON, BROOK, SMITH & REYNOLDS, P.C.
530 VIRGINIA ROAD,
P.O. BOX 9133
CONCORD, MA 01742-9133

MAILED

NOV 05 2009

OFFICE OF PETITIONS

In re Application of	:	
Joaquin BLAYA, et al	:	
Application No. 10/671,329	:	DECISION ON PETITION
Filed: September 25, 2003	:	
Attorney Docket No. 0050.2061-000	:	

This is a decision on the petition under 37 CFR 1.182, filed June 22, 2009, to change the order of the names of the inventors.

The petition is **GRANTED**.

Office records have been corrected to reflect the change in the order of the named inventors. A corrected Filing Receipt, which sets forth the desired order of the named inventors, accompanies this decision on petition.

As authorized, the $400 fee for the petition under 37 CFR 1.182 has been assessed to petitioner's deposit account.

This application is being referred to Technology Center AU 3762 for further processing.

Telephone inquiries regarding this decision should be directed to the undersigned at (571) 272-6735.

Thurman K. Page
Petitions Examiner
Office of Petitions

ATTACHMENT: Corrected Filing Receipt

UNITED STATES PATENT AND TRADEMARK OFFICE

UNITED STATES DEPARTMENT OF COMMERCE
United States Patent and Trademark Office
Address: COMMISSIONER FOR PATENTS
P.O. Box 1450
Alexandria, Virginia 22313-1450
www.uspto.gov

APPLICATION NUMBER	FILING or 371(c) DATE	GRP ART UNIT	FIL FEE REC'D	ATTY.DOCKET.NO	TOT CLAIMS	IND CLAIMS
10/671,329	09/25/2003	3762	1684	0050.2061-000	24	4

CONFIRMATION NO. 5686

CORRECTED FILING RECEIPT

21005
HAMILTON, BROOK, SMITH & REYNOLDS, P.C.
530 VIRGINIA ROAD
P.O. BOX 9133
CONCORD, MA 01742-9133

OC000000038541200

Date Mailed: 10/30/2009

Receipt is acknowledged of this non-provisional patent application. The application will be taken up for examination in due course. Applicant will be notified as to the results of the examination. Any correspondence concerning the application must include the following identification information: the U.S. APPLICATION NUMBER, FILING DATE, NAME OF APPLICANT, and TITLE OF INVENTION. Fees transmitted by check or draft are subject to collection. Please verify the accuracy of the data presented on this receipt. **If an error is noted on this Filing Receipt, please submit a written request for a Filing Receipt Correction. Please provide a copy of this Filing Receipt with the changes noted thereon. If you received a "Notice to File Missing Parts" for this application, please submit any corrections to this Filing Receipt with your reply to the Notice. When the USPTO processes the reply to the Notice, the USPTO will generate another Filing Receipt incorporating the requested corrections**

Applicant(s)

Hugh Herr, Somerville, MA;
Joaquin Blaya, Santiago, CHILE;
Gill A. Pratt, Lexington, MA;

Assignment For Published Patent Application

Massachusetts Institute of Technology, Cambridge, MA

Power of Attorney:
Erik Ence--42511

Domestic Priority data as claimed by applicant

Foreign Applications

If Required, Foreign Filing License Granted: 12/17/2003

The country code and number of your priority application, to be used for filing abroad under the Paris Convention, is **US 10/671,329**

Projected Publication Date: Not Applicable

Non-Publication Request: No

Early Publication Request: No
**** SMALL ENTITY ****

Title

Active Ankle Foot Orthosis

Preliminary Class

607

PROTECTING YOUR INVENTION OUTSIDE THE UNITED STATES

Since the rights granted by a U.S. patent extend only throughout the territory of the United States and have no effect in a foreign country, an inventor who wishes patent protection in another country must apply for a patent in a specific country or in regional patent offices. Applicants may wish to consider the filing of an international application under the Patent Cooperation Treaty (PCT). An international (PCT) application generally has the same effect as a regular national patent application in each PCT-member country. The PCT process **simplifies** the filing of patent applications on the same invention in member countries, but **does not result** in a grant of "an international patent" and does not eliminate the need of applicants to file additional documents and fees in countries where patent protection is desired.

Almost every country has its own patent law, and a person desiring a patent in a particular country must make an application for patent in that country in accordance with its particular laws. Since the laws of many countries differ in various respects from the patent law of the United States, applicants are advised to seek guidance from specific foreign countries to ensure that patent rights are not lost prematurely.

Applicants also are advised that in the case of inventions made in the United States, the Director of the USPTO must issue a license before applicants can apply for a patent in a foreign country. The filing of a U.S. patent application serves as a request for a foreign filing license. The application's filing receipt contains further information and guidance as to the status of applicant's license for foreign filing.

Applicants may wish to consult the USPTO booklet, "General Information Concerning Patents" (specifically, the section entitled "Treaties and Foreign Patents") for more information on timeframes and deadlines for filing foreign patent applications. The guide is available either by contacting the USPTO Contact Center at 800-786-9199, or it can be viewed on the USPTO website at http://www.uspto.gov/web/offices/pac/doc/general/index.html.

For information on preventing theft of your intellectual property (patents, trademarks and copyrights), you may wish to consult the U.S. Government website, http://www.stopfakes.gov. Part of a Department of Commerce initiative, this website includes self-help "toolkits" giving innovators guidance on how to protect intellectual property in specific countries such as China, Korea and Mexico. For questions regarding patent enforcement issues, applicants may call the U.S. Government hotline at 1-866-999-HALT (1-866-999-4158).

LICENSE FOR FOREIGN FILING UNDER

Title 35, United States Code, Section 184

Title 37, Code of Federal Regulations, 5.11 & 5.15

GRANTED

The applicant has been granted a license under 35 U.S.C. 184, if the phrase "IF REQUIRED, FOREIGN FILING LICENSE GRANTED" followed by a date appears on this form. Such licenses are issued in all applications where the conditions for issuance of a license have been met, regardless of whether or not a license may be required as

set forth in 37 CFR 5.15. The scope and limitations of this license are set forth in 37 CFR 5.15(a) unless an earlier license has been issued under 37 CFR 5.15(b). The license is subject to revocation upon written notification. The date indicated is the effective date of the license, unless an earlier license of similar scope has been granted under 37 CFR 5.13 or 5.14.

This license is to be retained by the licensee and may be used at any time on or after the effective date thereof unless it is revoked. This license is automatically transferred to any related applications(s) filed under 37 CFR 1.53(d). This license is not retroactive.

The grant of a license does not in any way lessen the responsibility of a licensee for the security of the subject matter as imposed by any Government contract or the provisions of existing laws relating to espionage and the national security or the export of technical data. Licensees should apprise themselves of current regulations especially with respect to certain countries, of other agencies, particularly the Office of Defense Trade Controls, Department of State (with respect to Arms, Munitions and Implements of War (22 CFR 121-128)); the Bureau of Industry and Security, Department of Commerce (15 CFR parts 730-774); the Office of Foreign AssetsControl, Department of Treasury (31 CFR Parts 500+) and the Department of Energy.

NOT GRANTED

No license under 35 U.S.C. 184 has been granted at this time, if the phrase "IF REQUIRED, FOREIGN FILING LICENSE GRANTED" DOES NOT appear on this form. Applicant may still petition for a license under 37 CFR 5.12, if a license is desired before the expiration of 6 months from the filing date of the application. If 6 months has lapsed from the filing date of this application and the licensee has not received any indication of a secrecy order under 35 U.S.C. 181, the licensee may foreign file the application pursuant to 37 CFR 5.15(b).

UNITED STATES PATENT AND TRADEMARK OFFICE

UNITED STATES DEPARTMENT OF COMMERCE
United States Patent and Trademark Office
Address: COMMISSIONER FOR PATENTS
P.O. Box 1450
Alexandria, Virginia 22313-1450
www.uspto.gov

Ballard Spahr LLP
SUITE 1000
999 PEACHTREE STREET
ATLANTA, GA 30309-3915

Mail Date: 04/21/2010

Applicant	: James C. Powers	: DECISION ON REQUEST FOR
Patent Number	: 7429560	: RECALCULATION of PATENT
Issue Date	: 09/30/2008	: TERM ADJUSTMENT IN VIEW
Appliction No	: 10/671,360	: OF WYETH
Filed	: 09/25/2003	:
		:

The Patentee's Request for Recalculation is **DISMISSED.**

This Request is deemed ineligible for consideration for one or more of the following reasons:

(A). The patent for which PTA recalculation is requested is either a design or reissue application or is a reexamination proceeding;

(B). The patent for which PTA recalculation is requested resulted from a utility or plant application filed under 35 USC 111(a) before May 29, 2000 and no CPA filed in the application on/after May 29, 2000;

(C). The patent for which PTA recalculation is requested resulted from an international application in which the international filing date was before May 29, 2000 and no CPA filed in the application on/after May 29, 2000;

(D). The patent for which PTA recalculation is requested issued on/after March 2, 2010;

(E). The Request for Recalculation was filed more than 180 days after the grant date of the patent and the request was not filed within two months of a dismissal of a request for reconsideration of the of the patent term under 37 CFR 1.705(d);

(F). The Request for Recalculation is not solely limited to USPTO pre-Wyeth interpretation of 35 U.S.C. 154(b)(2)(A);

or

(G). A civil action was filed pursuant to 35 U.S.C. 154(b)(4)(A)concerning the same patent at issue in this request.

Patentee may file a reply to this decision dismissing the Request for Recalculation. Patentee must file such reply within one month or thirty days, whichever is longer, of the mail date of the decision dismissing the Request for Recalculation. No fee is required if patentee is asserting in the reply that the dismissal for ineligibility is improper.

Patentee should use document code PET.OP if electronically filing a reply to this dismissal. If the USPTO finds that the request was improperly deemed ineligible, the USPTO will mail applicant a recalculation determination.

Patentee should be aware that in order to preserve the right to review in the United States District Court for the District of Columbia of the USPTO patent term adjustment determination, patentee must ensure that he or she also take the steps required under 35 U.S.C. 154(b)(4)(A). Nothing in the request for recalculation should be construed as providing an alternative time frame for commencing a civil action under 35 U.S.C. 154 (b)(4)(A).

Any questions concerning this decision should be directed to the Office of Patent Legal Administration at 571-272-7702.

UNITED STATES PATENT AND TRADEMARK OFFICE

Commissioner for Patents
United States Patent and Trademark Office
P.O. Box 1450
Alexandria, VA 22313-1450
www.uspto.gov

CANON U.S.A. INC. INTELLECTUAL PROPERTY DIVISION
15975 Alton Parkway
Irvine, CA 92618-3731

COPY MAILED

MAR 1 1 2008

OFFICE OF PETITIONS

In re Application of :
Atsuchi Date :
Application No. 10/671,364 : DECISION ON PETITION
Filed: September 24, 2003 :
Attorney Docket No. :

This is a decision on the petition under the unintentional provisions of 37 CFR 1.137(b), filed 15 February 2008, to revive the above-identified application.

The petition is **GRANTED**.

This application became abandoned for failure to timely submit corrected formal drawings on or before 04 January 2008, as required by the Notice of Allowance and Fee(s) Due and the Notice of Allowability, mailed on 04 October 2007. Accordingly, the date of abandonment of this application is 05 January 2008.

The petition satisfies the requirements of 37 CFR 1.137(b) in that petitioner has supplied (1) the reply in the form of a corrected Fig. 13, (2) the petition fee of $1,540.00; and (3) a proper statement of unintentional delay.

Telephone inquiries concerning this decision should be directed to Allen C. Ho at (571) 272-6052.

This application is being referred to Publishing Division for processing into a patent.

David Bucci
Petitions Examiner
Office of Petitions

RECEIVED
CENTRAL FAX CENTER
AUG 1 2 2005

IN THE UNITED STATES PATENT AND TRADEMARK OFFICE

In re U. S. Patent: 6,848,651 B2 Examiner: S. A. Holzen

Issued: February 1, 2005 Group: 3644

Inventor(s): Donald J. Christensen Docket No. H0004550-3112

For: **ELECTRO-HYDRAULIC THRUST REVERSER LOCK ACTUATION SYSTEM AND METHOD**

CERTIFICATE OF CORRECTION UNDER 37 CFR 1.323

Certificate of Corrections Branch
Commissioner for Patents
P.O. Box 1450
Alexandria, VA 22313-1450

Sir:

Please correct the above-identified patent by issuing a Certificate of Correction for mistakes resulting from both Applicant and the USPTO under Rule 1.323 as follows:

In Column 9, line ~~32~~ 31, delete "11" and add --14--.
In Column 9, line ~~32~~ 31, delete "1" and add --11--.
In Column 9, line ~~37~~ 36, delete "12" and add --15--.
In Column 9, line ~~37~~ 36, delete "11" and add --14--.
In Column 9, line ~~48~~ 47, delete "13" and add --11--.
In Column 9, line ~~61~~ 59, delete "14" and add --12--.
In Column 9, line ~~61~~ 59, delete "13" and add --11--.
In Column 10, line 3, delete "15" and add --13--.
In Column 10, line 3, delete "14" and add --12--.

The above errors resulted unintentionally. You are hereby authorized to charge our Account No. 50-2091 $100.00 per Rule 1.20(a), and any other fee deemed necessary.

Respectfully submitted,

Date: 8/12/05
Ingrassia Fisher & Lorenz, P.C.

By: Paul D. Amrozowicz
Attorney for Applicant(s)
Reg. No. 45,264
Tel. (480) 385-5060

AUG 1 7 2005

SPE: P.T. Luu

SPE RESPONSE FOR CERTIFICATE OF CORRECTION 10/671,373

Paper No.: _____

DATE : 9/9/05

TO SPE OF : ART UNIT 3644

SUBJECT : Request for Certificate of Correction on Patent No.: 6848651

A response is requested with respect to the accompanying request for a certificate of correction.

Please complete this form and return with file, within **7** days to:
Palm location **7580, Certificates of Correction Branch – South Tower – 9A22**
If response is for an IFW, **return to employee (named below) via PUBSCofC Team in MADRAS.**
With respect to the change(s) requested, correcting Office and/or Applicant's errors, should the patent read as shown in the certificate of correction (COCIN)? No new matter should be introduced, nor should the scope or meaning of the claims be changed.

Lamonte M. Newsome

Thank You For Your Assistance

Certificates of Correction Branch
Tel. No. 703-305-8309

The request for issuing the above-identified correction(s) is hereby:
Note your decision on the appropriate box.

- ☐ **Approved** — **All** changes apply.
- ☒ **Approved in Part** — Specify below which changes **do not** apply.
- ☐ **Denied** — State the reasons for denial below.

Comments:

The line numbering is incorrect. The correct line numbering is corrected on the CofC

SPE

3644
Art Unit

PTOL-306 (REV. 7/03)

U.S. DEPARTMENT OF COMMERCE Patent and Trademark Office

SPE RESPONSE FOR CERTIFICATE OF CORRECTION

Paper No.: _____

DATE : August 14, 2006

TO SPE OF : ART UNIT 2653

SUBJECT : Request for Certificate of Correction for Appl. No.: 10/671377 Patent No.: 6,961,224

Please respond to this request for a certificate of correction within 7 days.

Please review the requested changes/corrections as shown in the **COCIN** document(s) in the IFW application image. No new matter should be introduced, nor should the scope or meaning of the claims be changed.

Please complete the response (see below) and forward the completed response to scanning using document code **COCX**.

Magdalene Talley

Certificates of Correction Branch

703-308-9390 ext. 116

Thank You For Your Assistance

The request for issuing the above-identified correction(s) is hereby:

Note your decision on the appropriate box.

- ☑ **Approved** — **All** changes apply.
- ☐ **Approved in Part** — Specify below which changes **do not** apply.
- ☐ **Denied** — State the reasons for denial below.

Comments: 2003/0030434 A1 2/2003 Hasegawa et al... 324/252

SPE

2627
Art Unit

UNITED STATES PATENT AND TRADEMARK OFFICE

Commissioner for Patents
United States Patent and Trademark Office
P.O. Box 1450
Alexandria, VA 22313-1450
www.uspto.gov

JOHN LEZDEY & ASSOCIATES
2401 West Bay Drive; Suite 118
Largo, FL 33770

COPY MAILED

JUL 11 2007

OFFICE OF PETITIONS

In re Application of	:	
Ding et al.	:	
Application No.: 10/671399	:	DECISION ON
Filing or 371(c) Date: 09/25/2003	:	PETITION
Title of Invention:	:	
STABLE AQUEOUS	:	
SLURRY SUSPENSIONS	:	

This is a decision in response to the "Petition to Withdraw Holding of Abandonment based on Failure to Receive Office Action (MPEP 711.03(c)II and 37 CFR 1.181," filed April 5, 2007. The delay in treating this petition is regretted.

This Petition is hereby **dismissed**.

Any further petition must be submitted within TWO (2) MONTHS from the mail date of this decision. Extensions of time under 37 CFR 1.136(a) are permitted. The reconsideration request should include a cover letter entitled "Renewed Petition under [insert the applicable code section]." This is **not** final agency action within the meaning of 5 U.S.C. § 704.

Background

The above-identified application became abandoned for failure to timely and properly reply to the Notice of Allowance and Issue Fee Due, and Notice of Allowability, mailed July 31, 2006. The Notices set a non-extendable three (3) month period for reply.

The Office action was mailed to Applicant at the correspondence address of record, however, the Office action was returned to this office by the United States Postal Service ("USPS) on August 15, 2006.

Petition under 37 CFR 1.181

Applicant requests withdrawal of the holding of abandonment because the Notices were not found. Applicant requests this Office review the file and determine correspondence address to which the Notice of Allowance was mailed. Applicant files a Change of Correspondence Address with the petition, changing the correspondence to Largo, Florida. Applicant requests a copy of the Notice of Allowance.

Applicable Law, Rules and MPEP

The MPEP 711.03(c)A, Petition To Withdraw Holding of Abandonment Based on Failure To Receive Office Action, provides

> In Delgar v. Schulyer, 172 USPQ 513 (D.D.C. 1971), the court decided that the Office should mail a new Notice of Allowance in view of the evidence presented in support of the contention that the applicant's representative did not receive the original Notice of Allowance. Under the reasoning of Delgar, an allegation that an Office action was never received may be considered in a petition to withdraw the holding of abandonment. If adequately supported, the Office may grant the petition to withdraw the holding of abandonment and remail the Office action. That is, the reasoning of Delgar is applicable regardless of whether an application is held abandoned for failure to timely pay the issue fee (35 U.S.C. 151) or for failure to prosecute (35 U.S.C. 133). To minimize costs and burdens to practitioners and the Office, the Office has modified the showing required to establish nonreceipt of an Office action. The showing required to establish nonreceipt of an Office communication must include a statement from the practitioner stating that the Office communication was not received by the practitioner and attesting to the fact that a search of the file jacket and docket records indicates that the Office communication was not received. A copy of the docket record where the nonreceived Office communication would have been entered had it been received and docketed must be attached to and referenced in practitioner's statement. For example, if a three month period for reply was set in the nonreceived Office action, a copy of the docket report showing all replies docketed for a date three months from the mail date of the nonreceived Office action must be submitted as documentary proof of nonreceipt of the Office action. The showing outlined above may not be sufficient if there are circumstances that point to a conclusion that the Office action may have been lost after receipt rather than a conclusion that the Office action was lost in the mail (e.g., if the practitioner has a history of not receiving Office actions). (Emphasis supplied)

MPEP 711.03(c)

Analysis

A review of Office records reveals that the Notices mailed July 31, 2006 were mailed to a correspondence address in Clearwater, Florida. Additionally, the address in Clearwater, Florida was the correspondence address of record as filed in this office with the application on September 25, 2003. Thereafter, on January 22, 2007, Applicant filed a Change of Correspondence Address wherein Applicant changed his mailing address to Pinellas Park, Florida. With the present petition, filed April 5, 2007, Applicant changes his correspondence address to Largo, Florida.

Office records reveal that the Notices mailed July 31, 2006 were mailed to the correspondence address of record. Thereafter, Applicant changed his correspondence. As such, there are

circumstances that point to a conclusion that the Office action may have been lost after receipt rather than a conclusion that the Office action was lost in the mail.

Accordingly, the petition to withdraw the holding of abandonment is dismissed.

Alternate venue

Applicant is strongly urged to file a petition stating that the delay was unintentional. Public Law 97-247, § 3, 96 Stat. 317 (1982), which revised patent and trademark fees, amended 35 U.S.C. § 41(a)(7) to provide for the revival of an "unintentionally" abandoned application without a showing that the delay in was "unavoidable." An "unintentional" petition under 37 CFR 1.137(b) must be accompanied by the required fee.

The filing of a petition under 37 CFR 1.137(b) cannot be intentionally delayed and therefore must be filed promptly. A person seeking revival due to unintentional delay can not make a statement that the delay was unintentional unless the entire delay, including the delay from the date it was discovered that the application was abandoned until the filing of the petition to revive under 37 CFR 1.137(b), was unintentional. A statement that the delay was unintentional is not appropriate if petitioner intentionally delayed the filing of a petition for revive under 37 CFR 1.137(b).

Further correspondence with respect to this matter should be addressed as follows:

By mail: Director for Patents
PO Box 1450
Alexandria, VA 22313-1450

By FAX: (571) 273-8300
Attn: Office of Petitions

By hand: Customer Service Window
Randolph Building
401 Dulany Street
Alexandria, VA 22314

Telephone inquiries concerning this petition Decision should be directed to the undersigned at (571) 272-3232.

Derek L. Woods
Attorney
Office of Petitions

UNITED STATES PATENT AND TRADEMARK OFFICE

Commissioner for Patents
United States Patent and Trademark Office
P.O. Box 1450
Alexandria, VA 22313-1450
www.uspto.gov

JOHN LEZDEY & ASSOCIATES
2401 West Bay Drive; Suite 118
Largo, FL 33770

COPY MAILED

APR 30 2008

OFFICE OF PETITIONS

In re Application of	:	
Ding et al.	:	
Application No.: 10/671399	:	DECISION ON
Filing or 371(c) Date: 09/25/2003	:	PETITION
Title of Invention:	:	
STABLE AQUEOUS	:	
SLURRY SUSPENSIONS	:	

This is a decision on the petition under the unintentional provisions of 37 CFR 1.137(b), filed March 28, 2008, to revive the above-identified application.

The petition is **GRANTED**.

The above-identified application became abandoned for failure to timely and properly reply to the Notice of Allowance and Issue Fee Due, and Notice of Allowability, mailed July 31, 2006. The Notices set a non-extendable three (3) month period for reply.

The petition satisfies the requirements of 37 CFR 1.137(b) in that petitioner has supplied (1) the reply in the form of payment of the issue fee; (2) the petition fee; and (3) a proper statement of unintentional delay.

Telephone inquiries concerning this matter should be directed to the undersigned at (571) 272-3232.

This application is being referred to Publishing Division for processing into a patent.

Derek L. Woods
Attorney
Office of Petitions

UNITED STATES PATENT AND TRADEMARK OFFICE

COMMISSIONER FOR PATENTS
UNITED STATES PATENT AND TRADEMARK OFFICE
P.O. BOX 1450
ALEXANDRIA, VA 22313-1450
www.uspto.gov

Paper No.

Philip H. Von Neida
The BOC Group, Inc.
Legal Services -Intellectual Property
100 Mountain Ave.
Murray Hill, NJ 07974

COPY MAILED
APR 21 2004
OFFICE OF PETITIONS

In re Application of :
Dunn :
Application No. 10/671,404 :
Filed: September 25, 2003 : ON PETITION
Attorney Docket No. M03A236 :

Petitioner alleges that the application was deposited in Express Mail service on September 25, 2003. Petitioner has filed the appropriate documentary and corroborating evidence demonstrating that September 25, 2003 was the date the correspondence was deposited Express Mail Post Office to Addressee.

In view of the above, the petition is **granted**. No fee is necessary.

This application file will be forwarded to the Office of Initial Patent Examination for correction of the filing date to September 25, 2003.

Telephone inquiries concerning this matter should be directed to the undersigned at (703) 305-0014.

Derek L. Woods
Derek L. Woods
Petitions Attorney
Office of Petitions

UNITED STATES PATENT AND TRADEMARK OFFICE

Commissioner for Patents
United States Patent and Trademark Office
P.O. Box 1450
Alexandria, VA 22313-1450
www.uspto.gov

COOK, ALEX, MCFARRON, MANZO, CUMMINGS & MEHLER LTD
SUITE 2850
200 WEST ADAMS STREET
CHICAGO IL 60606

COPY MAILED

JUL 1 4 2004

OFFICE OF PETITIONS

In re Application of :
Keithly, Taggart, Wilson :
Application No. 10/671,409 : ON PETITION
Filed: September 25, 2003 :
For: ENHANCING COMMERCIAL POULTRY :
OPERATIONS WITH LITTER HAVING
CITRUS BYPRODUCT

This is a decision on the petition filed April 30, 2004, under 37 CFR 1.182 and MPEP 402.10 requesting separate revocation and appointment of a power of attorney for inventor David Wilson in the above-identified application.

The petition is **granted**.

In accordance with MPEP 402.10 and 37 CFR 1.182, the requested revocation of the prior power, and appointment of counsel E..J. Asbury III to represent David Wilson is **granted** as of the mail date of this decision.

In order to assure that all interests are properly and effectively represented, all further correspondence to the United States Patent and Trademark Office (USPTO) in this application--or resultant patent-- must be signed **both** by Asbury who represents Wilson and by any one of those members of COOK, ALEX, MCFARRON, MANZO, CUMMINGS & MEHLER LTD ("COOK") appointed on the combined declaration and power of attorney present on filing. One of counsel already of record from COOK will also be responsible for coordinating all replies or submissions to the USPTO. See MPEP 402.10. *Any registered practitioner signing subsequent papers must indicate whom he or she represents*. The correspondence address remains that of COOK.

All parties are reminded that dual correspondence is not permitted, and will not be undertaken by the USPTO.

Nevertheless, a courtesy copy of this decision is being mailed to counsel for Wilson.

Telephone inquiries related to this decision should be addressed to the undersigned at (703) 305-1820.

Brian Hearn
Petitions Examiner
Office of Petitions
Office of the Deputy Commissioner
for Patent Examination Policy

cc:

E.J. Asbury III
3330 Cumberland Blvd.
Suite 500
Atlanta, GA 30339

UNITED STATES PATENT AND TRADEMARK OFFICE

Commissioner for Patents
United States Patent and Trademark Office
P.O. Box 1450
Alexandria, VA 22313-1450
www.uspto.gov

KNOBBE MARTENS OLSON & BEAR LLP
2040 MAIN STREET
FOURTEENTH FLOOR
IRVINE CA 92614

COPY MAILED

JUN 3 0 2005

OFFICE OF PETITIONS

In re Application of :
Jimin Zhang et al. :
Application No. 10/671,417 : ON PETITION
Filed: September 24, 2003 :
Attorney's Docket No. THERUS.005CP1 :

This is a decision on the petition filed June 6, 2005 under 37 CFR 1.137(b), to revive the above-identified application.

The petition is **GRANTED**.

The instant application became abandoned on November 17, 2004, for failure to timely reply to the Notice to File Missing Parts ("Notice"), mailed September 16, 2004, which set a two (2) month shortened statutory period for reply. The Notice required the filing of an oath or declaration and a late filing surcharge as well as an Abstract. While no extension of time in accordance with 37 CFR 1.136(a) was requested, a reply was submitted March 24, 2005 and only included an executed oath or declaration and late filing surcharge. Accordingly a Notice of Incomplete Reply was mailed May 23, 2005. The instant petition and this decision on petition precede the mailing of the Notice of Abandonment.

The oath or declaration and late filing surcharge, as well as the Abstract, as required by the Notice to File Missing Parts mailed September 16, 2004, in addition to the petition fee is acknowledged.

All other requirements having been met , this application is being forwarded to the Office of Initial Patent Examination for further pre-examination processing.

Telephone inquiries concerning this matter may be directed to the undersigned Petitions Attorney at (571) 272-3212.

Patricia Faison-Ball

Patricia Faison-Ball
Senior Petitions Attorney
Office of Petitions

UNITED STATES PATENT AND TRADEMARK OFFICE

Commissioner for Patents
United States Patent and Trademark Office
P.O. Box 1450
Alexandria, VA 22313-1450
www.uspto.gov

HAROLD L. NOVICK
NATH & ASSOCIATES
6TH FLOOR
1030 15TH STREET, N.W.
WASHINGTON, DC 20005

COPY MAILED

SEP 2 2 2005

OFFICE OF PETITIONS

In re Application of	:	
Kazushige Ohno et al	:	
Application No. 10/671,418	:	ON PETITION
Filed: September 26, 2003	:	
Attorney Docket No. 82302Y	:	

This is a decision on the petition under 37 CFR 1.313(c), filed September 21, 2005, which is being treated under 37 CFR 1.313(c)(2), to withdraw the above-identified application from issue after payment of the issue fee.

The petition is **GRANTED**.

The above-identified application is withdrawn from issue for consideration of a submission under 37 CFR 1.114 (request for continued examination). See 37 CFR 1.313(c)(2).

Petitioner is advised that the issue fee paid on July 21, 2005 in the above-identified application cannot be refunded. If, however, the above-identified application is again allowed, petitioner may request that it be applied towards the issue fee required by the new Notice of Allowance.[1]

Telephone inquiries should be directed to Wan Laymon at (571) 272-3220.

This matter is being referred to Technology Center AU 1724 for processing of the request for continued examination under 37 CFR 1.114 and for consideration of the concurrently filed IDS.

Wan Laymon
Petitions Examiner
Office of Petitions
Office of the Deputy Commissioner
for Patent Examination Policy

---

[1] The request to apply the issue fee to the new Notice may be satisfied by completing and returning the new Issue Fee Transmittal Form PTOL-85(b), which includes the following language thereon: "Commissioner for Patents is requested to apply the Issue Fee and Publication Fee (if any) or re-apply any previously paid issue fee to the application identified above." Petitioner is advised that, whether a fee is indicated as being due or not, the Issue Fee Transmittal Form **must** be completed and timely submitted to avoid abandonment. Note the language in bold text on the first page of the Notice of Allowance and Fee(s) Due (PTOL-85).

UNITED STATES PATENT AND TRADEMARK OFFICE

Commissioner for Patents
United States Patent and Trademark Office
P.O. Box 1450
Alexandria, VA 22313-1450
www.uspto.gov

HAROLD L NOVICK
NASH & ASSOCIATES PLLC
1030 15TH ST NW
6TH FLOOR
WASHINGTON DC 20005

COPY MAILED

AUG 07 2006

OFFICE OF PETITIONS

In re Application of		
Ohno, et al.	:	
Application No. 10/671,418	:	DECISION ON
Filed: September 26, 2003	:	PETITION
Attorney Docket No. 82302Y	:	

This is in response to the petition to revive under 37 CFR 1.137(b), filed April 21, 2006.

The petition under 37 CFR 1.137(b) is **GRANTED**.

The above-identified application became abandoned for failure to timely file a response to the Notice of Allowance mailed on October 17, 2005. This notice set a statutory period for reply of three months. No reply having been received, the application became abandoned on January 18, 2006. A Notice of Abandonment was mailed on March 7, 2006.

With the instant petition, petitioner paid the petition fee, submitted a response to the Notice of Allowance in the form of a completed PTOL-85B, and made the proper statement of unintentional delay.

The application is being forwarded to the Office of Patent Publication for processing into a patent.

Telephone inquiries related to this decision should be directed to the undersigned at (571)272-3207.

Cliff Congo
Petitions Attorney
Office of Petitions

UNITED STATES PATENT AND TRADEMARK OFFICE

UNITED STATES DEPARTMENT OF COMMERCE
United States Patent and Trademark Office
Address: COMMISSIONER FOR PATENTS
P.O. Box 1450
Alexandria, Virginia 22313-1450
www.uspto.gov

WARE FRESSOLA VAN DER SLUYS & ADOLPHSON, LLP
BRADFORD GREEN, BUILDING 5
755 MAIN STREET, P O BOX 224
MONROE, CT 06468

Mail Date: 04/21/2010

Applicant	: Mikko Makela	: DECISION ON REQUEST FOR
Patent Number	: 7594194	: RECALCULATION of PATENT
Issue Date	: 09/22/2009	: TERM ADJUSTMENT IN VIEW
Appliction No	: 10/671,430	: OF WYETH AND NOTICE OF INTENT TO
Filed	: 09/24/2003	: ISSUE CERTIFICATE OF CORRECTION
		:

The Request for Recalculation is **GRANTED** to the extent indicated.

The patent term adjustment has been determined to be **909** days. The USPTO will *sua sponte* issue a certificate of correction reflecting the amount of PTA days determined by the recalculation.

Prior to the issuance of the certificate of correction, the USPTO will afford patentee an opportunity to be heard and request reconsideration. Accordingly, patentee has **one month or thirty (30) days**, whichever is longer, to file a request for reconsideration of this patent term adjustment calculation. See 35 U.S.C. 154(b)(3)(B)(ii) and 37 CFR 1.322(a)(4). No extensions of time will be granted under 37 CFR 1.136.

Patentee should use document code PET.OP if electronically filing a request for reconsideration of this patent term adjustment calculation. The patentee must also include the information required by 37 CFR 1.705(b)(2) and the fee required by 37 CFR 1.18(e). If patentee does not file a timely request for reconsideration of this patent term adjustment calculation including the information required by 37 CFR 1.705(b)(2) and the fee required by 37 CFR 1.18(e), the USPTO will issue a certificate of correction reflecting the PTA determination noted above.

Patentee should be aware that in order to preserve the right to review in the United States District Court for the District of Columbia of the USPTO patent term adjustment determination, patentee must ensure that he or she also take the steps required under 35 U.S.C. 154(b)(4)(A) in a timely manner. Nothing in the request for recalculation should be construed as providing an alternative time frame for commencing a civil action under 35 U.S.C. 154(b)(4)(A).

Any questions concerning this decision should be directed to the Office of Patent Legal Administration at 571-272-7702.

UNITED STATES PATENT AND TRADEMARK OFFICE

UNITED STATES DEPARTMENT OF COMMERCE
United States Patent and Trademark Office
Address: COMMISSIONER FOR PATENTS
P.O. Box 1450
Alexandria, Virginia 22313-1450
www.uspto.gov

WARE FRESSOLA VAN DER SLUYS & ADOLPHSON, LLP
BRADFORD GREEN, BUILDING 5
755 MAIN STREET, P O BOX 224
MONROE, CT 06468

Mail Date: 05/18/2010

Applicant : Mikko Makela
Patent Number : 7594194
Issue Date : 09/22/2009
Application No : 10/671,430
Filed : 09/24/2003

: NOTICE CONCERNING IMPROPER
: CALCULATION OF PATENT TERM
: ADJUSTMENT BASED UPON USPTO
: IMPROPERLY MEASURING REDUCTION
: PERIOD UNDER 37 CFR 1.704(c)(10).

The United States Patent and Trademark Office (USPTO) discovered that in processing the recent recalculation decisions mailed in response to patentee's filed Request for Recalculation of Patent Term Adjustment in view of Wyeth, the USPTO improperly measured the reduction period for reductions under 37 CFR 1.704(c)(10). Pursuant to 37 CFR 1.704(c)(10), patentee's reduction begins on the date of filing the amendment under 37 CFR 1.312 ("1.312 amendment") or other related paper and ends on the date that the Office mails a response to the filing of the 1.312 amendment or other paper. It has been discovered that during the recalculation, the calculation failed to the limit the reduction to the mail date of the response to the 1.312 amendment or other paper. Accordingly, patentee's reductions were greater than warranted.

This notice **VACATES** the previous GRANTED request for recalculation and provides patentee with a revised GRANTED recalculation.

The patent term adjustment has been determined to be **1012** days. The USPTO will *sua sponte* issue a certificate of correction reflecting the amount of patent term adjustment (PTA) days determined by the recalculation.

Prior to the issuance of the certificate of correction, the USPTO will afford patentee an opportunity to be heard and request reconsideration. Accordingly, patentee has **one month or thirty (30) days** from the mail date of this notice, whichever is longer, to file a request for reconsideration of this PTA calculation. See 35 U.S.C. § 154(b)(3)(B)(ii) and 37 CFR 1.322(a)(4).

Patentee should use document code PET.OP if electronically filing a request for reconsideration of this PTA calculation. The patentee must also include the information required by 37 CFR 1.705(b)(2), and the fee required by 37 CFR 1.18(e). If patentee does not file a timely request for reconsideration of this PTA calculation, including the information required by 37 CFR 1.705(b)(2) and the fee required by 37 CFR 1.18(e), the USPTO will issue a certificate of correction reflecting the PTA determination noted above.

Patentee should be aware that in order to preserve the right of review of the USPTO's PTA determination in the United States District Court for the District of Columbia, patentee must ensure that the steps required under 35 U.S.C. § 154 (b)(4) are taken in a timely manner. Nothing in the request for recalculation should be construed as providing an alternative time frame for commencing a civil action under 35 U.S.C. § 154(b)(4).

UNITED STATES PATENT AND TRADEMARK OFFICE

Commissioner for Patents
United States Patent and Trademark Office
P.O. Box 1450
Alexandria, VA 22313-1450
www.uspto.gov

COPY MAILED
JUL 21 2006
OFFICE OF PETITIONS

MCKENNA LONG & ALDRIDGE LLP
1900 K STREET, NW
WASHINGTON DC 20006

In re Application of
Moo Yeol Park et al
Application No. 10/671,454
Filed: September 29, 2003
Attorney Docket No. 8733.704.20-US

ON PETITION

This is a decision on the petition filed June 26, 2006, requesting withdrawal of the above-identified application from issue after payment of the issue fee.

The petition is **DISMISSED as moot**.

Unfortunately, the petition did not reach the appropriate official for decision within sufficient time to avert issuance of the application into a patent. Petitioner's attention is directed to 37 CFR 1.313(d), which states:

> A petition under this section will not be effective to withdraw the application from issue unless it is actually received and granted by the appropriate officials **before the date of issue**. Withdrawal of an application from issue after payment of the issue fee may not be effective to avoid publication of application information.

Telephone inquiries should be directed to the undersigned at (571) 272-3208.

Karen Creasy

Karen Creasy
Petitions Examiner
Office of Petitions

UNITED STATES PATENT AND TRADEMARK OFFICE

Commissioner for Patents
United States Patent and Trademark Office
P.O. Box 1450
Alexandria, VA 22313-1450
www.uspto.gov

BIRCH STEWART KOLASCH & BIRCH
PO BOX 747
FALLS CHURCH, VA 22040-0747

COPY MAILED

NOV 0 8 2005

OFFICE OF PETITIONS

Decision on Petition

In re Application of :
Byun :
Application No. 10/671,507 :
Filed: September 29, 2003 :
Attorney Docket No. 4653-0105P :

This is a decision on the petition filed February 2, 2005, requesting application's drawings be replaced by copies of drawings filed in application no. 10/671,563.

The petition is **granted**.

Facts:

The instant application and application no. 10/671,563 were both filed on September 29, 2003. Both of the applications listed above have the same inventor.

For unknown reasons, the drawings intended for application no. 10/671,563 were placed in the file for application no. 10/671,507. The drawings intended for application no. 10/671,507 were placed in the file for application no. 10/671,563.

On November 2, 2004, a non-final Office action was mailed for the instant application. The Office action indicated the 3 drawing sheets did not correspond with the remaining parts of the application. As a result, petitioner discovered the drawings for the two applications had been switched.

The instant petition was filed on February 2, 2005.

A final Office action was mailed on May 6, 2005. A copy of a reply to the final Office action cannot be located in the file. **Therefore, the application is abandoned**. Petitioner may wish to file a petition to revive under 37 CFR 1.137(b).

Analysis:

Petitioner requests the drawings for the instant application be replaced by a copy of the drawings filed in application no. 10/671,563. Petitioner also requests the application retain a filing date of September 29, 2003.

Since the drawings intended for the instant application were in fact present in the PTO on September 29, 2005, the copy of the drawings from application no. 10/671,563 filed February 2, 2005, will be accepted and the application will retain a filing date of September 29, 2003.

The 3 sheets of drawings filed in the instant application on September 29, 2003, will remain in the file but will not be entered. The instant application will be reprocessed using the copy of Figures 1-7 filed on February 2, 2005.

The Office of Initial Patent Examination will be informed of the instant decision and will reprocess the application with a filing date of September 29, 2003, using the 3 sheets of drawings filed on February 2, 2005.

Telephone inquiries should be directed to Petitions Attorney Steven Brantley at (571) 272-3203.

Charles Steven Brantley
Petitions Attorney
Office of Petitions

SPE RESPONSE FOR CERTIFICATE OF CORRECTION

DATE : 4-25-08

Paper No.: _____

TO SPE OF : ART UNIT 3700

SUBJECT : Request for Certificate of Correction on Patent No.: 7093739 (10/671507)

A response is requested with respect to the accompanying request for a certificate of correction.

Please complete this form and return with file, within 7 days to:
Palm location **7580, Certificates of Correction Branch – South Tower – 9A22**
If response is for an IFW, **return to employee (named below) via PUBSCofC Team in MADRAS.**
With respect to the change(s) requested, correcting Office and/or Applicant's errors, should the patent read as shown in the certificate of correction (COCIN)? No new matter should be introduced, nor should the scope or meaning of the claims be changed.

Drawings (Please response A/S/A/P

Thank You For Your Assistance

Eva James
Certificates of Correction Branch
Tel. No. 703-305-8309

The request for issuing the above-identified correction(s) is hereby:
Note your decision on the appropriate box.

- ☒ **Approved** — **All** changes apply.
- ☐ **Approved in Part** — Specify below which changes **do not** apply.
- ☐ **Denied** — State the reasons for denial below.

Comments:

_____

_____

_____

_____

_____

SPE — 3754 Art Unit

SPE RESPONSE FOR CERTIFICATE OF CORRECTION

Paper No.: _____

DATE : 07/03/07

TO SPE OF : ART UNIT 2854

SUBJECT : Request for Certificate of Correction for Appl. No.: **10/671522** Patent No.: **7021755**

Please respond to this request for a certificate of correction within 7 days.

Please review the requested changes/corrections as shown in the **COCIN** document(s) in the IFW application image. No new matter should be introduced, nor should the scope or meaning of the claims be changed.

Please complete the response (see below) and forward the completed response to scanning using document code **COCX**.

A Green

Angela Green
Certificates of Correction Branch
703.308.9380 ext. 123

Thank You For Your Assistance

The request for issuing the above-identified correction(s) is hereby:
Note your decision on the appropriate box.

- ☑ **Approved** — All changes apply.
- ☐ **Approved in Part** — Specify below which changes **do not** apply.
- ☐ **Denied** — State the reasons for denial below.

Comments: _____

Judy Nguyen
JUDY NGUYEN
SUPERVISORY PATENT EXAMINER

_____ **SPE**

2854 **Art Unit**

UNITED STATES PATENT AND TRADEMARK OFFICE

UNITED STATES DEPARTMENT OF COMMERCE
United States Patent and Trademark Office
Address: COMMISSIONER FOR PATENTS
P.O. Box 1450
Alexandria, Virginia 22313-1450
www.uspto.gov

NTT DoCoMo Inc/BHGL
P.O. Box 10395
Chicago, IL 60610

Mail Date: 04/21/2010

Applicant	: Satoru Adachi	: DECISION ON REQUEST FOR
Patent Number	: 7596178	: RECALCULATION of PATENT
Issue Date	: 09/29/2009	: TERM ADJUSTMENT IN VIEW
Appliction No	: 10/671,527	: OF WYETH AND NOTICE OF INTENT TO
Filed	: 09/29/2003	: ISSUE CERTIFICATE OF CORRECTION
		:

The Request for Recalculation is **GRANTED** to the extent indicated.

The patent term adjustment has been determined to be **1157** days. The USPTO will *sua sponte* issue a certificate of correction reflecting the amount of PTA days determined by the recalculation.

Prior to the issuance of the certificate of correction, the USPTO will afford patentee an opportunity to be heard and request reconsideration. Accordingly, patentee has **one month or thirty (30) days**, whichever is longer, to file a request for reconsideration of this patent term adjustment calculation. See 35 U.S.C. 154(b)(3)(B)(ii) and 37 CFR 1.322(a)(4). No extensions of time will be granted under 37 CFR 1.136.

Patentee should use document code PET.OP if electronically filing a request for reconsideration of this patent term adjustment calculation. The patentee must also include the information required by 37 CFR 1.705(b)(2) and the fee required by 37 CFR 1.18(e). If patentee does not file a timely request for reconsideration of this patent term adjustment calculation including the information required by 37 CFR 1.705(b)(2) and the fee required by 37 CFR 1.18(e), the USPTO will issue a certificate of correction reflecting the PTA determination noted above.

Patentee should be aware that in order to preserve the right to review in the United States District Court for the District of Columbia of the USPTO patent term adjustment determination, patentee must ensure that he or she also take the steps required under 35 U.S.C. 154(b)(4)(A) in a timely manner. Nothing in the request for recalculation should be construed as providing an alternative time frame for commencing a civil action under 35 U.S.C. 154(b)(4)(A).

Any questions concerning this decision should be directed to the Office of Patent Legal Administration at 571-272-7702.

UNITED STATES PATENT AND TRADEMARK OFFICE

UNITED STATES DEPARTMENT OF COMMERCE
United States Patent and Trademark Office
Address: COMMISSIONER FOR PATENTS
P.O. Box 1450
Alexandria, Virginia 22313-1450
www.uspto.gov

NTT DoCoMo Inc/BHGL
P.O. Box 10395
Chicago, IL 60610

Mail Date: 05/18/2010

Applicant : Satoru Adachi
Patent Number : 7596178
Issue Date : 09/29/2009
Application No : 10/671,527
Filed : 09/29/2003

: NOTICE CONCERNING IMPROPER
: CALCULATION OF PATENT TERM
: ADJUSTMENT BASED UPON USPTO
: IMPROPERLY MEASURING REDUCTION
: PERIOD UNDER 37 CFR 1.704(c)(10).

The United States Patent and Trademark Office (USPTO) discovered that in processing the recent recalculation decisions mailed in response to patentee's filed Request for Recalculation of Patent Term Adjustment in view of Wyeth, the USPTO improperly measured the reduction period for reductions under 37 CFR 1.704(c)(10). Pursuant to 37 CFR 1.704(c)(10), patentee's reduction begins on the date of filing the amendment under 37 CFR 1.312 ("1.312 amendment") or other related paper and ends on the date that the Office mails a response to the filing of the 1.312 amendment or other paper. It has been discovered that during the recalculation, the calculation failed to the limit the reduction to the mail date of the response to the 1.312 amendment or other paper. Accordingly, patentee's reductions were greater than warranted.

This notice **VACATES** the previous GRANTED request for recalculation and provides patentee with a revised GRANTED recalculation.

The patent term adjustment has been determined to be **1218** days. The USPTO will *sua sponte* issue a certificate of correction reflecting the amount of patent term adjustment (PTA) days determined by the recalculation.

Prior to the issuance of the certificate of correction, the USPTO will afford patentee an opportunity to be heard and request reconsideration. Accordingly, patentee has **one month or thirty (30) days** from the mail date of this notice, whichever is longer, to file a request for reconsideration of this PTA calculation. See 35 U.S.C. § 154(b)(3)(B)(ii) and 37 CFR 1.322(a)(4).

Patentee should use document code PET.OP if electronically filing a request for reconsideration of this PTA calculation. The patentee must also include the information required by 37 CFR 1.705(b)(2), and the fee required by 37 CFR 1.18(e). If patentee does not file a timely request for reconsideration of this PTA calculation, including the information required by 37 CFR 1.705(b)(2) and the fee required by 37 CFR 1.18(e), the USPTO will issue a certificate of correction reflecting the PTA determination noted above.

Patentee should be aware that in order to preserve the right of review of the USPTO's PTA determination in the United States District Court for the District of Columbia, patentee must ensure that the steps required under 35 U.S.C. § 154 (b)(4) are taken in a timely manner. Nothing in the request for recalculation should be construed as providing an alternative time frame for commencing a civil action under 35 U.S.C. § 154(b)(4).

UNITED STATES PATENT AND TRADEMARK OFFICE

Commissioner for Patents
United States Patent and Trademark Office
P.O. Box 1450
Alexandria, VA 22313-1450
www.uspto.gov

PRAXAIR, INC.
LAW DEPARTMENT - M1 557
39 OLD RIDGEBURY ROAD
DANBURY CT 06810-5113

COPY MAILED

JUN 1 8 2007

OFFICE OF PETITIONS

In re Application of :
Marrella et al. :
Application No. 10/671,555 : ON PETITION
Filed: September 29, 2003 :
Attorney Docket No. D-21377 :

This is a decision on the petition under 37 CFR 1.181, filed August 30, 2005.

This application became abandoned for failure to timely submit a complete response to the Notice to File Missing Parts mailed November 12, 2004. The Notice set an extendable 2 month period for reply. No extensions of time were obtained pursuant to 37 CFR 1.136(a). This application was held abandoned on January 13, 2004. A Notice of Abandonment was mailed on August 17, 2005.

The petition to withdraw the holding of abandonment and the petition revive under 37 CFR 1.137(b) are **DISMISSED AS MOOT** in light of the Office of Initial Patent Examination's withdrawal of the Abandonment (September 19, 2005) prior to the rendering of a petition decision.

This application is being referred to Technology Center 1754 for further processing.

Telephone inquiries concerning this matter should be directed to the undersigned at (571) 272-3215.

Charlema R. Grant

Charlema R. Grant
Petitions Attorney
Office of Petitions

UNITED STATES PATENT AND TRADEMARK OFFICE

Commissioner for Patents
United States Patent and Trademark Office
P.O. Box 1450
Alexandria, VA 22313-1450
www.uspto.gov

BIRCH STEWART KOLASCH & BIRCH
PO BOX 747
FALLS CHURCH, VA 22040-0747

COPY MAILED

NOV 2 1 2005

OFFICE OF PETITIONS

In re Application of :
Byun :
Application No. 10/671,563 :
Filed: September 29, 2003 :
Attorney Docket No. 4653-0104P :

Decision on Petition

This is a decision on the petition filed January 3, 2005, requesting application's drawings be replaced by copies of drawings filed in application no. 10/671,507.

The petition is **granted**.

The instant application and application no. 10/671,507 were both filed on September 29, 2003. Both of the applications listed above have the same inventor.

For unknown reasons, the drawings intended for application no. 10/671,563 were placed in the file for application no. 10/671,507. The drawings intended for application no. 10/671,507 were placed in the file for application no. 10/671,563.

Petitioner requests the drawings for the instant application be replaced by a copy of the drawings filed in application no. 10/671,507. Petitioner also requests the application retain a filing date of September 29, 2003.

Since the drawings intended for the instant application were in fact present in the PTO on September 29, 2005, the copy of the drawings from application no. 10/671,507 filed January 3, 2005, will be accepted and the application will retain a filing date of September 29, 2003.

The 3 sheets of drawings filed in the instant application on September 29, 2003, will remain in the file but will not be entered. The instant application will be reprocessed using the copy of Figures 1-7 filed on January 3, 2005.

The Office of Initial Patent Examination will be informed of the instant decision and will reprocess the application with a filing date of September 29, 2003, using the 3 sheets of drawings filed on January 3, 2005. After reprocessing the application, OIPE will inform the examiner the application is in condition for further consideration by the examiner.

Telephone inquiries should be directed to Petitions Attorney Steven Brantley at (571) 272-3203.

Charles Steven Brantley
Petitions Attorney
Office of Petitions

UNITED STATES PATENT AND TRADEMARK OFFICE

Commissioner for Patents
United States Patent and Trademark Office
P.O. Box 1450
Alexandria, VA 22313-1450
www.uspto.gov

BIRCH STEWART KOLASCH & BIRCH
P O BOX 747
FALLS CHURCH, VA 22040-0747

COPY MAILED

NOV 1 8 2005

OFFICE OF PETITIONS

In re Application of :
Young-Kwang Byun :
Application No. 10/671,563 : DECISION GRANTING PETITION
Filed: September 29, 2003 : UNDER 37 CFR 1.313(c)(2)
Attorney Docket No. 4653-0104P :

This is a decision on the petition, filed November 16, 2005, under 37 CFR 1.313(c)(2) to withdraw the above-identified application from issue after payment of the issue fee.

The petition is **GRANTED**.

The above-identified application is withdrawn from issue for consideration of a submission under 37 CFR 1.114 (request for continued examination). See 37 CFR 1.313(c)(2).

Petitioner is advised that the issue fee paid on September 14, 2005 in the above-identified application cannot be refunded. If, however, the above-identified application is again allowed, petitioner may request that it be applied towards the issue fee required by the new Notice of Allowance.[1]

Telephone inquiries should be directed to the undersigned at (571) 272-3218.

This matter will be retained in the Office of Petitions to take appropriate action on the concurrently filed petition under 37 CFR 1.182, as well as on the petition under 37 CFR 1.181, filed January 3, 2005.

Frances Hicks
Petitions Examiner
Office of Petitions

---

[1] *The request to apply the issue fee to the new Notice may be satisfied by completing and returning the new Issue Fee Transmittal Form PTOL-85(b) (along with any balance due at the time of payment), which includes the following language thereon: "Commissioner for Patents is requested to apply the Issue Fee and Publication Fee (if any) or re-apply any previously paid issue fee to the application identified above." Petitioner is advised that, whether a fee is indicated as being due or not, the Issue Fee Transmittal Form* ***must*** *be completed and timely submitted to avoid abandonment. Note the language in bold text on the first page of the Notice of Allowance and Fee(s) Due (PTOL-85).*

UNITED STATES PATENT AND TRADEMARK OFFICE

Commissioner for Patents
United States Patent and Trademark Office
P.O. Box 1450
Alexandria, VA 22313-1450
www.uspto.gov

FINNEGAN, HENDERSON, FARABOW, GARRETT & DUNNER LLP
1300 I STREET, NW
WASHINGTON DC 20005

COPY MAILED
AUG 1 6 2004
OFFICE OF PETITIONS

In re Application of	:	
James Michael O'Dwyer	:	
Application No. 10/671,582	:	DECISION GRANTING PETITION
Filed: September 29, 2003	:	
Attorney Docket No.:8676.0005.01	:	
Title of Invention: Set Defence Means	:	

This is a decision on the petition filed April 12, 2004, requesting in effect, that a Notice Of Omitted Item(s) in a Nonprovisional Application("Notice") mailed March 19, 2004, be withdrawn.

The application was filed on September 29, 2003. However, on March 19, 2004, the Office of Initial Patent Examination (OIPE) mailed a Notice stating that the application had been accorded a filing date of September 29, 2003 but figures 6,10,and 11 described in the specification appeared to have been omitted.

In response, the present petition was filed wherein Petitioner contends twenty one sheets of drawings which included figures 6, 10 and 11 as described in the specification were filed on September 29, 2003. In support, the petition is accompanied by a copy of applicant's return postcard which lists " copy of international application 12 sheets of drawings and " Copy of amended sheets to International Preliminary Examination Report 9 sheets of drawings". The petition is further accompanied by a copy of figures 6,10, and 11.

Applicant's postcard receipt is prima facie evidence that twenty one sheets of drawings, including figures 6,10, and 11 were received on September 29, 2003. A review of the application file shows that figures 6, 10, and 11 are present. Therefore, it is

concluded that 21 sheets of drawings including figures 1-12 as described in the specification were received on September 29, 2003.

The petition is **Granted**.

The petition fee however, will not be returned because this petition was not necessitated by an error on the part of the Office. Instead a petition was required because petitioner submitted multiple specifications and duplicate sets of drawings. Thus the Office was correct in stating figures 6,10, and 11 appeared to have been omitted.

Twenty one sheets of drawings including figures 1-12 supplied on September 29, 2003, will be used for processing and examination purposes.

The application is being returned to the Office of Initial Patent Examination for further processing with a filing date of **September 29, 2003** using the 21 sheets of drawings which includes figures 6,10, and 12 supplied on September 29, 2003. The Office of Initial Patent Examination is also directed to send a Notice to File Corrected Application Papers requiring a complete set of drawings in compliance with 37 CFR 1.84 and 37 CFR 1.121(d).

Telephone inquiries related to this decision may be directed to the undersigned at (703) 306-0251.

Charlema R. Grant

Charlema R. Grant

Petitions Attorney

Office of Petitions

UNITED STATES PATENT AND TRADEMARK OFFICE

COMMISSIONER FOR PATENTS
UNITED STATES PATENT AND TRADEMARK OFFICE
P.O. BOX 1450
ALEXANDRIA, VA 22313-1450
www.uspto.gov

Director of Engineering
Spectrum Signal Processing Inc.
2700 Production Way, Suite 300
Burnaby, British Columbia
Canada V5A 4X1

COPY MAILED

FEB 13 2007

OFFICE OF PETITIONS

In re Application of	:	
BRAND	:	
Application No.: 10/671,620	:	NOTIFICATION
Filing Date: September 29, 2003	:	
Attorney Docket No.: SPEC05	:	

A review of this application reveals that applicant has attempted to appoint an attorney or agent who is neither registered to practice before the U.S. Patent and Trademark Office in patent matters nor named as an inventor in the application, contrary to 37 CFR 1.31 and 1.32. Therefore, the appointment is void, *ab initio*. We will not recognize the appointment and all correspondence concerning this application must be signed by: 1) all named applicants (inventors), 2) all the owners of the rights to the invention, or 3) a registered attorney or agent duly appointed by the inventor(s) or the owner(s). Furthermore, all future communications from the Office will be addressed to the first named inventor, unless specific instructions to the contrary are supplied by the applicant(s) for patent or owner(s).

The correspondence submitted on September 13, 2006 will not be treated because it lacks the proper signature as discussed above.

In the event the assignee seeks to take action in the present application, ownership of the application must be established in accordance with 37 CFR 3.73(b) and Manual of Patent Examining Procedure (MPEP) 324.

Further correspondence with respect to this matter should be addressed as follows:

By mail: Mail Stop PETITIONS
Commissioner for Patents
Post Office Box 1450
Alexandria, VA 22313-1450

By hand: Customer Service Window
Mail Stop Petitions
Randolph Building
401 Dulany Street
Alexandria, VA 22314

By fax: (571) 273-8300
ATTN: Office of Petitions

Any questions concerning this matter may be directed to Bryan Lin at (571) 272-3303.

Bryan Lin

Bryan Lin
Legal Examiner
Office of the Deputy Commissioner
for Patent Examination Policy

UNITED STATES PATENT AND TRADEMARK OFFICE

COMMISSIONER FOR PATENTS
UNITED STATES PATENT AND TRADEMARK OFFICE
P.O. BOX 1450
ALEXANDRIA, VA 22313-1450
www.uspto.gov

Director of Engineering
Spectrum Signal Processing Inc.
2700 Production Way, Suite 300
Burnaby, British Columbia
Canada V5A 4X1

COPY MAILED

MAY 0 2 2007

OFFICE OF PETITIONS

In re Application of	:	
BRAND	:	
Application No.: 10/671,620	:	DECISION ON PETITION
Filing Date: September 29, 2003	:	UNDER 37 CFR 1.137(B)
Attorney Docket No.: SPEC05	:	

This is a decision on the petition under 37 CFR 1.137(b), filed September 13, 2006, to revive the above-identified application.

The petition is **GRANTED.**

The above-identified application became abandoned for failure to reply in a timely manner to the non-final Office action mailed October 20, 2005, which set a three month shortened statutory period for reply. No extensions of time under the provisions of 37 CFR 1.136(a) were obtained. Accordingly, by operation of law, the above-identified application became abandoned on January 21, 2006.

The petition satisfies the conditions for revival pursuant to the provisions of 37 CFR 1.137(b) in that (1) the reply in the form of an amendment and remarks; (2) the petition fee; and (3) the required statement of unintentional delay have been received. Accordingly, the reply to non-final Office action mailed October 20, 2005 is accepted as having been unintentionally delayed.

With further regard to the statement in the petition that "the failure to reply to Office Action mailed October 20, 2005, was unintentional", this statement is interpreted as a statement that the entire delay in filing the required reply from the due date for the reply until the filing of a grantable petition under 37 CFR 1.137(b) was unintentional. If this is an incorrect interpretation in view of the rules, petitioner is required to provide a statement to that effect.

This application is being referred to Technology Center AU 2111 for appropriate action on the reply in due course.

Telephone inquiries concerning this decision should be directed to the undersigned at (571) 272-3303.

Bryan Lin

Bryan Lin
Legal Examiner
Office of the Deputy Commissioner
for Patent Examination Policy

UNITED STATES PATENT AND TRADEMARK OFFICE

Commissioner for Patents
United States Patent and Trademark Office
P.O. Box 1450
Alexandria, VA 22313-1450
www.uspto.gov

Bradley P. Heisler
Heisler & Associates
3017 Douglas Blvd., Suite 300
Roseville, CA 95661

COPY MAILED
JUL 05 2007
OFFICE OF PETITIONS

In re Application of
Glenn et al.
Application No. 10/671,640
Filed: 09-26-2003
Attorney Docket No. 3121.001

DECISION ON PETITION

This is a decision on the petition under 37 CFR 1.181, filed June 4, 2007, to withdraw the holding of abandonment for the above-identified application.

On June 26, 2006, the Office mailed a nonfinal Office Action, which set a three-month shortened statutory period for reply. In the absence of a timely filed response, the application was held abandoned on September 27, 2006. A Notice of Abandonment was mailed on March 9, 2007.

In the petition, the practitioner asserted that he did not receive the nonfinal Office Action because the USPTO mailed the nonfinal Office action to an incorrect correspondence address. The practitioner stated that on March 18, 2004, the USPTO erroneous entered a change of power of attorney and correspondence address intended for a different application, number 10/670,640. The practitioner contended that this change caused all further correspondence from the USPTO to be sent to another law firm. The practitioner submitted a request to correct the power of attorney and change the correspondence address of record. Additionally, the practitioner requested that the Office withdraw the holding of abandonment, re-mail the Office action, and restart the period for reply.

A review of the record indicates that the Office incorrectly entered a power of attorney and change of correspondence address intended for a different application. Consequently, the nonfinal Office action was mailed to the wrong address. It is obvious from the record that the practitioner did not receive the nonfinal Office action of June 26, 2006.

The Office has corrected the correspondence address and made it of record. The petition under 37 CFR 1.181 is **GRANTED**. No petition fee is required.

Technology Center Art Unit 3733 has been advised of this decision. The matter is being referred to the Technology Center's technical support staff for mailing of a new nonfinal Office Action. The three (3) month shortened statutory time period for responding to the nonfinal Office Action will be set to run from the mailing date of the new nonfinal Office Action.

Telephone inquiries related to this decision may be directed to the undersigned at (571) 272-3211.

Christina Tartera Donnell

Christina Tartera Donnell
Senior Petitions Attorney
Office of Petitions

UNITED STATES PATENT AND TRADEMARK OFFICE

Commissioner for Patents
United States Patent and Trademark Office
P.O. Box 1450
Alexandria, VA 22313-1450
www.uspto.gov

CHARLES C.H. WU
98 DISCOVERY
IRVINE, CA 92618-3105

COPY MAILED

JAN 2 7 2006

OFFICE OF PETITIONS

In re Application of	:
Chun-Te Yu	:
Application No. 10/671,659	: DECISION ON PETITION
Filed: September 29, 2003	: UNDER 37 CFR 1.78(a)(6)
Attorney Docket No. EL-CFP00414	:

This is a decision on the petition, filed December 14, 2005 (and again on December 15, 2005), which is being treated as a petition under 37 CFR 1.78(a)(6), to accept an unintentionally delayed claim under 35 U.S.C. § 119(e) for the benefit of a prior-filed provisional application Application No. 60/443,331, filed January 29, 2003).

The petition is **DISMISSED**.

The present nonprovisional application was filed after November 29, 2000, and the claim herein for the benefit of priority to the prior-filed provisional application is submitted after expiration of the period specified in 37 CFR 1.78(a)(5)(ii). Therefore, this is a proper petition under 37 CFR 1.78(a)(6).

A petition under 37 CFR 1.78(a)(6) is only applicable to those applications filed on or after November 29, 2000. Further, the petition is appropriate only after expiration of the period specified in 37 CFR 1.78(a)(5)(ii) and must be filed during the pendency of the nonprovisional application. In addition, the petition must be accompanied by:

(1) the reference required by 35 U.S.C. § 119(e) and 37 CFR 1.78(a)(5)(i) to the prior-filed application, unless previously submitted;
(2) the surcharge set forth in § 1.17(t); and
(3) a statement that the entire delay between the date the claim was due under 37 CFR 1.78(a)(5)(ii) and the date the claim was filed was unintentional. The Commissioner may require additional information where there is a question whether the delay was unintentional.

Firstly, the petition lacks compliance with item (1) above. In this regard, the petition is not accompanied by a reference to the prior-filed application in an amendment to the first line of the specification, following the title, or by reference in an Application Data Sheet (ADS) in accordance with 37 CFR 1.76(a)(5). The amendment to include the prior-filed application in the first line of the specification cannot be a physical part of a petition, but must comply with the provisions of 37 CFR 1.121, 1.52, or 1.4(c). Note that 37 CFR 1.121 states that amendments are made by filing a paper, in compliance with § 1.52, directing that specified amendments be made. The pertinent section of 37 CFR 1.52 states that the claim (in this case, the claim for priority), must commence on a separate

physical sheet. 37 CFR 1.4(c) states that each distinct subject must be contained in a separate paper since different matters may be considered by different branches of the United States Patent and Trademark Office. Accordingly, a proper reference to the prior-filed application has not been submitted.

Secondly, it is noted that the inventor in provisional Application No. 60/443,331, the application to which priority is now sought, sets forth Cory O. Nykoluk as the sole inventor. The present application names Chun-Te Yu as the sole inventor. 37 CFR 1.78(a)(4) states:

> In order for an application to claim the benefit of one or more prior-filed provisional applications, each prior-filed provisional application must name as an inventor at least one inventor named in the later-filed application and disclose the named inventor's invention claimed in at least one claim of the later-filed application in the manner provided by the first paragraph of 35 U.S.C. 112.

Therefore, for the further reason that there is no common inventor in either the provisional application or the present nonprovisional application, it would be improper to grant the petition to accept the late claim for priority to the provisional application. *See* 37 CFR 1.48 for correction of inventorship in a patent application.

It is noted that duplicate fees for the instant petition were assessed to petitioner's credit card (possibly because of the duplicate filing of the petition). Accordingly, the duplicate $1,370 fee will be credited back to petitioner's credit card in due course.

Further correspondence with respect to this matter should be addressed as follows:

By mail: Mail Stop PETITION
Commissioner for Patents
Post Office Box 1450
Alexandria, VA 22313-1450

By hand: Customer Service Window
Mail Stop Petitions
Randolph Building
401 Dulany Street
Alexandria, VA 22314

By fax: (571) 273-8300
ATTN: Office of Petitions

Any questions concerning this matter may be directed to the undersigned at (571) 272-3218.

Frances Hicks

Frances Hicks
Petitions Examiner
Office of Petitions

UNITED STATES PATENT AND TRADEMARK OFFICE

COMMISSIONER FOR PATENTS
UNITED STATES PATENT AND TRADEMARK OFFICE
P.O. BOX 1450
ALEXANDRIA, VA 22313-1450
www.uspto.gov

CHARLES C.H. WU
98 DISCOVERY
IRVINE, CA 92618-3105

COPY MAILED

JUL 18 2007

OFFICE OF PETITIONS

In re Application of	:	
Chun Te Yu et al	:	
Application No. 10/671,659	:	DECISION ON PETITION
Filed: September 29, 2003	:	UNDER 37 CFR 1.78(a)(6)
Attorney Docket No. EL-CFP00414	:	

This is a decision on the petition, filed June 15, 2007, which is being treated as a RENEWED petition under 37 CFR 1.78(a)(6), to accept an unintentionally delayed claim under 35 U.S.C. §119(e) for the benefit of priority to prior-filed provisional Application No. 60/443,331, filed January 29, 2003.

The petition is **GRANTED.**

A petition under 37 CFR 1.78(a)(6) is only applicable to those applications filed on or after November 29, 2000. Further, the petition is appropriate only after expiration of the period specified in 37 CFR 1.78(a)(5)(ii) and must be filed during the pendency of the nonprovisional application. In addition, the petition must be accompanied by:

(1) the reference required by 35 U.S.C. § 119(e) and 37 CFR 1.78(a)(5)(i) and (iii) to the prior-filed application, unless previously submitted;
(2) the surcharge set forth in § 1.17(t); and
(3) a statement that the entire delay between the date the claim was due under 37 CFR 1.78(a)(5)(ii) and the date the claim was filed was unintentional. The Director may require additional information where there is a question whether the delay was unintentional.

Additionally, the instant nonprovisional application must be pending at the time of filing of the reference to the prior-filed provisional application as required by 37 CFR 1.78(a)(5)(ii). Further, the nonprovisional application claiming the benefit of the prior-filed provisional application must have been filed within twelve months of the filing date of the prior-filed provisional application.

All of the above requirements having been satisfied, the late claim for benefit of priority under 35 U.S.C. § 119(e) is accepted as being unintentionally delayed.

The granting of the petition to accept the delayed benefit claim to the prior-filed application under 37 CFR 1.78(a)(6) should not be construed as meaning that this application is entitled to the benefit of the filing date of the prior-filed application. In order for this application to be entitled to the benefit of the prior-filed application, all other requirements under 35 U.S.C. §119(e) and 37 CFR 1.78(a)(4) and (a)(5) must be met. Similarly, the fact that the corrected Filing Receipt accompanying this decision on petition includes the prior-filed application should not be construed as meaning that applicant is entitled to the claim for benefit of priority to the prior-filed application noted thereon. Accordingly, the examiner will, in due course, consider this benefit claim and determine whether the application is entitled to the benefit of the earlier filing date.

A corrected Filing Receipt, which includes the priority claim to the prior-filed provisional application, accompanies this decision on petition.

The $1,370 surcharge petition fee was received with the previous petition of December 14, 2005. Accordingly, the $1,370 duplicate fee received on June 15, 2007 will be refunded to petitioner's credit card.

Any inquiries concerning this decision may be directed to the undersigned at (571) 272-3218. All other inquiries concerning either the examination procedures or status of the application should be directed to the Technology Center.

The application is being forwarded to Technology Center AU 3676 for consideration by the examiner of the claim under 35 U.S.C. §119(e) for the benefit of priority to the prior-filed provisional application.

Frances Hicks
Petitions Examiner
Office of Petitions

ATTACHMENT: Corrected Filing Receipt

UNITED STATES PATENT AND TRADEMARK OFFICE

UNITED STATES DEPARTMENT OF COMMERCE
United States Patent and Trademark Office
Address: COMMISSIONER FOR PATENTS
P.O. Box 1450
Alexandria, Virginia 22313-1450
www.uspto.gov

APPL NO.	FILING OR 371(c) DATE	ART UNIT	FIL FEE REC'D	ATTY.DOCKET NO	TOT CLMS	IND CLMS
10/671,659	09/29/2003	3676	440	EL-CFP00414	20	3

CONFIRMATION NO. 8271

CORRECTED FILING RECEIPT

OC000000024863108

25864
CHARLES C.H. WU
98 DISCOVERY
IRVINE, CA 92618-3105

Date Mailed: 07/17/2007

Receipt is acknowledged of this nonprovisional patent application. The application will be taken up for examination in due course. Applicant will be notified as to the results of the examination. Any correspondence concerning the application must include the following identification information: the U.S. APPLICATION NUMBER, FILING DATE, NAME OF APPLICANT, and TITLE OF INVENTION. Fees transmitted by check or draft are subject to collection. Please verify the accuracy of the data presented on this receipt. **If an error is noted on this Filing Receipt, please write to the Office of Initial Patent Examination's Filing Receipt Corrections. Please provide a copy of this Filing Receipt with the changes noted thereon. If you received a "Notice to File Missing Parts" for this application, please submit any corrections to this Filing Receipt with your reply to the Notice. When the USPTO processes the reply to the Notice, the USPTO will generate another Filing Receipt incorporating the requested corrections (if appropriate).**

Applicant(s)

Chun Te Yu, Fusing Township, TAIWAN;
Cory o. Nukoluk, St.Louis, MO;

Power of Attorney: The patent practitioners associated with Customer Number **25864**.

Domestic Priority data as claimed by applicant

This appln claims benefit of 60/443,331 01/29/2003

Foreign Applications

TAIWAN 92115338 08/22/2003

If Required, Foreign Filing License Granted: 12/24/2003

The country code and number of your priority application, to be used for filing abroad under the Paris Convention, is US10/671,659

Projected Publication Date: Not Applicable

Non-Publication Request: No

Early Publication Request: No

**** SMALL ENTITY ****

Title

Padlock

Preliminary Class

070

PROTECTING YOUR INVENTION OUTSIDE THE UNITED STATES

Since the rights granted by a U.S. patent extend only throughout the territory of the United States and have no effect in a foreign country, an inventor who wishes patent protection in another country must apply for a patent in a specific country or in regional patent offices. Applicants may wish to consider the filing of an international application under the Patent Cooperation Treaty (PCT). An international (PCT) application generally has the same effect as a regular national patent application in each PCT-member country. The PCT process **simplifies** the filing of patent applications on the same invention in member countries, but **does not result** in a grant of "an international patent" and does not eliminate the need of applicants to file additional documents and fees in countries where patent protection is desired.

Almost every country has its own patent law, and a person desiring a patent in a particular country must make an application for patent in that country in accordance with its particular laws. Since the laws of many countries differ in various respects from the patent law of the United States, applicants are advised to seek guidance from specific foreign countries to ensure that patent rights are not lost prematurely.

Applicants also are advised that in the case of inventions made in the United States, the Director of the USPTO must issue a license before applicants can apply for a patent in a foreign country. The filing of a U.S. patent application serves as a request for a foreign filing license. The application's filing receipt contains further information and guidance as to the status of applicant's license for foreign filing.

Applicants may wish to consult the USPTO booklet, "General Information Concerning Patents" (specifically, the section entitled "Treaties and Foreign Patents") for more information on timeframes and deadlines for filing foreign patent applications. The guide is available either by contacting the USPTO Contact Center at 800-786-9199, or it can be viewed on the USPTO website at http://www.uspto.gov/web/offices/pac/doc/general/index.html.

For information on preventing theft of your intellectual property (patents, trademarks and copyrights), you may wish to consult the U.S. Government website, http://www.stopfakes.gov. Part of a Department of Commerce initiative, this website includes self-help "toolkits" giving innovators guidance on how to protect intellectual property in specific countries such as China, Korea and Mexico. For questions regarding patent enforcement issues, applicants may call the U.S. Government hotline at 1-866-999-HALT (1-866-999-4158).

LICENSE FOR FOREIGN FILING UNDER
Title 35, United States Code, Section 184
Title 37, Code of Federal Regulations, 5.11 & 5.15

GRANTED

The applicant has been granted a license under 35 U.S.C. 184, if the phrase "IF REQUIRED, FOREIGN FILING LICENSE GRANTED" followed by a date appears on this form. Such licenses are issued in all applications where the conditions for issuance of a license have been met, regardless of whether or not a license may be required as set forth in 37 CFR 5.15. The scope and limitations of this license are set forth in 37 CFR 5.15(a) unless an earlier license has been issued under 37 CFR 5.15(b). The license is subject to revocation upon written notification. The date indicated is the effective date of the license, unless an earlier license of similar scope has been granted under 37 CFR 5.13 or 5.14.

This license is to be retained by the licensee and may be used at any time on or after the effective date thereof unless it is revoked. This license is automatically transferred to any related applications(s) filed under 37 CFR 1.53(d). This license is not retroactive.

The grant of a license does not in any way lessen the responsibility of a licensee for the security of the subject matter as imposed by any Government contract or the provisions of existing laws relating to espionage and the national security or the export of technical data. Licensees should apprise themselves of current regulations especially with respect to certain countries, of other agencies, particularly the Office of Defense Trade Controls, Department of State (with respect to Arms, Munitions and Implements of War (22 CFR 121-128)); the Bureau of Industry and Security, Department of Commerce (15 CFR parts 730-774); the Office of Foreign Assets Control, Department of Treasury (31 CFR Parts 500+) and the Department of Energy.

NOT GRANTED

No license under 35 U.S.C. 184 has been granted at this time, if the phrase "IF REQUIRED, FOREIGN FILING LICENSE GRANTED" DOES NOT appear on this form. Applicant may still petition for a license under 37 CFR 5.12, if a license is desired before the expiration of 6 months from the filing date of the application. If 6 months has lapsed from the filing date of this application and the licensee has not received any indication of a secrecy order under 35 U.S.C. 181, the licensee may foreign file the application pursuant to 37 CFR 5.15(b).

SPE: T. Page

SPE RESPONSE FOR CERTIFICATE OF CORRECTION

Paper No.: _____

DATE : 7/8/06

TO SPE OF : ART UNIT 1621

SUBJECT : Request for Certificate of Correction for Appl. No.: 10/671,674 Patent No.: 7009080

Please respond to this request for a certificate of correction within 7 days.

Please review the requested changes/corrections as shown in the **COCIN** document(s) in the IFW application image. No new matter should be introduced, nor should the scope or meaning of the claims be changed.

Please complete the response (see below) and forward the completed response to scanning using document code **COCX**.

Lamonte M. Newsome
Certificates of Correction Branch
703-308-9390 ext. 112

Thank You For Your Assistance

The request for issuing the above-identified correction(s) is hereby:
Note your decision on the appropriate box.

- ☒ **Approved** — **All** changes apply.
- ☐ **Approved in Part** — Specify below which changes **do not** apply.
- ☐ **Denied** — State the reasons for denial below.

Comments: _____

T R Page — **SPE**

1621 — **Art Unit**

UNITED STATES PATENT AND TRADEMARK OFFICE

UNITED STATES DEPARTMENT OF COMMERCE
United States Patent and Trademark Office
Address: COMMISSIONER FOR PATENTS
P.O. Box 1450
Alexandria, Virginia 22313-1450
www.uspto.gov

DICKSTEIN SHAPIRO LLP
1825 EYE STREET NW
Washington, DC 20006-5403

Mail Date: 04/26/2010

Applicant	: Harry A. Dugger III	: DECISION ON REQUEST FOR
Patent Number	: 7632517	: RECALCULATION of PATENT
Issue Date	: 12/15/2009	: TERM ADJUSTMENT IN VIEW
Application No	: 10/671,715	: OF WYETH AND NOTICE OF INTENT TO
Filed	: 09/29/2003	: ISSUE CERTIFICATE OF CORRECTION
		:

The Request for Recalculation is **GRANTED** to the extent indicated.

The patent term adjustment has been determined to be **368** days. The USPTO will *sua sponte* issue a certificate of correction reflecting the amount of PTA days determined by the recalculation.

Prior to the issuance of the certificate of correction, the USPTO will afford patentee an opportunity to be heard and request reconsideration. Accordingly, patentee has **one month or thirty (30) days**, whichever is longer, to file a request for reconsideration of this patent term adjustment calculation. See 35 U.S.C. 154(b)(3)(B)(ii) and 37 CFR 1.322(a)(4). No extensions of time will be granted under 37 CFR 1.136.

Patentee should use document code PET.OP if electronically filing a request for reconsideration of this patent term adjustment calculation. The patentee must also include the information required by 37 CFR 1.705(b)(2) and the fee required by 37 CFR 1.18(e). If patentee does not file a timely request for reconsideration of this patent term adjustment calculation including the information required by 37 CFR 1.705(b)(2) and the fee required by 37 CFR 1.18(e), the USPTO will issue a certificate of correction reflecting the PTA determination noted above.

Patentee should be aware that in order to preserve the right to review in the United States District Court for the District of Columbia of the USPTO patent term adjustment determination, patentee must ensure that he or she also take the steps required under 35 U.S.C. 154(b)(4)(A) in a timely manner. Nothing in the request for recalculation should be construed as providing an alternative time frame for commencing a civil action under 35 U.S.C. 154(b)(4)(A).

Any questions concerning this decision should be directed to the Office of Patent Legal Administration at 571-272-7702.

UNITED STATES PATENT AND TRADEMARK OFFICE

Commissioner for Patents
United States Patent and Trademark Office
P.O. Box 1450
Alexandria, VA 22313-1450
www.uspto.gov

BIRCH STEWART KOLASCH & BIRCH
PO BOX 747
FALLS CHURCH VA 22040-0747

COPY MAILED

MAY 17 2007

OFFICE OF PETITIONS

In re Patent No. 7,140,101	:	
Issue Date: November 28, 2006	:	
Application No. 10/671,735	:	NOTICE
Filed: September 29, 2003	:	
Attorney Docket No. 4667-0103P	:	

This is a notice regarding your request for acceptance of a fee deficiency submission under 37 CFR 1.28. On September 1, 1998, the Court of Appeals for the Federal Circuit held that 37 CFR 1.28(c) is the sole provision governing the time for correction of the erroneous payment of the issue fee as a small entity. **See DH Technology v. Synergystex International, Inc. 154 F.3d 1333, 47 USPQ2d 1865 (Fed. Cir. Sept. 1, 1998).**

The Office no longer investigates or rejects original or reissue applications under 37 CFR 1.56. **1098 Off. Gaz. Pat. Office 502 (January 3, 1989)**. Therefore, nothing in this Notice is intended to imply that an investigation was done.

Your fee deficiency submission under 37 CFR 1.28 is hereby **ACCEPTED**.

This patent is no longer entitled to small entity status. Accordingly, all future fees paid in this patent must be paid at the large entity rate.

Liana Walsh
Petitions Examiner
Office of Petitions

UNITED STATES PATENT AND TRADEMARK OFFICE

Commissioner for Patents
United States Patent and Trademark Office
P.O. Box 1450
Alexandria, VA 22313-1450
www.uspto.gov

COPY MAILED

NOV 30 2006

OFFICE OF PETITIONS

LAHIVE & COCKFIELD, LLP
ONE POST OFFICE SQUARE
BOSTON MA 02109-2127

In re Application of :
Peter Martin Fischer et al :DECISION GRANTING FILING
Application No. 10/671,747 :DATE OF **SEPTEMBER 26, 2003**
Filed: September 26, 2003 :
Attorney Docket No. CCI-027CN :

This is a decision on the petition under 37 CFR 1.10, filed June 27, 2006, requesting that the above-identified application be accorded a filing date of September 26, 2003, rather than the presently accorded date of September 24, 2003.

Petitioner requests the earlier filing date on the basis that the application was purportedly deposited with the U.S. Postal Service (USPS) as Express Mail on September 26, 2006 pursuant to 37 CFR 1.10. In support, petitioner has submitted a copy of the Express Mail Corporate Account Mailing Statement which verifies the mail date as September 26, 2003, for Express Mail label No. EV309881169US. The same Express Mail receipt number appears on the original "* Application Transmittal." Petitioner also submitted a copy of an Express Mail Label No. EV309881169US; copy of the Application Transmittal Letter dated September 26, 2003; copy of the return postcard made prior to deposit of the application with the USPS; and a copy of the Lahive & Cockfield Express Mail Log to show that the application filing package was entered into the records on September 26, 2003.

In view of the above, it is concluded that the application was deposited as "Express Mail" with the USPS on September 26,2003.

The petition is **granted**.

The application is being referred to the Office of Initial Patent Examination for processing with a filing date of **September 26, 2003,** and for the mailing of a corrected Filing Receipt.

Telephone inquiries specific to this decision on petition should be directed to the undersigned at (571) 272-3208.

Karen Creasy

Karen Creasy
Petitions Examiner
Office of Petitions

UNITED STATES PATENT AND TRADEMARK OFFICE

Commissioner for Patents
United States Patent and Trademark Office
P.O. Box 1450
Alexandria, VA 22313-1450
www.uspto.gov

LAHIVE & COCKFIELD, LLP
ONE POST OFFICE SQUARE
BOSTON MA 02109-2127

COPY MAILED

JUL 25 2007

OFFICE OF PETITIONS

In re Application of	:	
Peter Martin Fischer et al	:	
Application No. 10/671,747	:	DECISION GRANTING PETITION
Filed: September 26, 2003	:	UNDER 37 CFR 1.137(b)
Attorney Docket No. CCI-027CN	:	

This is a decision on the petition under 37 CFR 1.137(b), filed March 5, 2007, to revive the above-identified application.

The petition is **GRANTED**.

The petition satisfies the conditions for revival pursuant to the provisions of 37 CFR 1.137(b) in that (1) the reply in the form of the issue fee; (2) the petition fee; and (3) the required statement of unintentional delay have been received. Accordingly, the reply to the Notice of Allowance of March 27, 2006, is accepted as having been unintentionally delayed.

Telephone inquiries concerning this decision should be directed to the undersigned at (571) 272-3208.

This matter is being referred to Patent Publication.

Karen Creasy

Karen Creasy
Petitions Examiner
Office of Petitions

UNITED STATES PATENT AND TRADEMARK OFFICE

PET DEC

COMMISSIONER FOR PATENTS
UNITED STATES PATENT AND TRADEMARK OFFICE
P.O. BOX 1450
ALEXANDRIA, VA 22313-1450
www.uspto.gov

APR 7 2004

VP
PAPER NO. ___

In re Application of
Alfred H. Stegens et al.
Serial Number: 10/671,761
Filed: September 25, 2003
For: V-BELT DRIVEN VACUUM CLEANER BRUSHROLL

PETITION UNDER M.P.E.P.708.02 IV

This is in response to the petition filed September 25, 2003, requesting that the above-identified application be granted Special Status under Section 708.02 IV of the MPEP and 37 CFR 1.102(c) (**no fee required**).

The request for Special Status considered under Section 708.02 IV of the MPEP is granted because criteria under 37 CFR 1.102(c) has been met.

Accordingly the petition is **GRANTED.**

Marian C Knode

Marian C. Knode, Special Programs Examiner
Technology Center 1700
Chemical and Materials Engineering

PEARNE & GORDON
Ste. 1200
1801 East 9th Street
Cleveland OH 44114-3108

UNITED STATES PATENT AND TRADEMARK OFFICE

COMMISSIONER FOR PATENTS
UNITED STATES PATENT AND TRADEMARK OFFICE
P.O. BOX 1450
ALEXANDRIA, VA 22313-1450
www.uspto.gov

OIPE
60125
SEP 22 2004
PATENT & TRADEMARK OFFICE

Paper No.

BIRCH STEWART KOLASCH & BIRCH
PO BOX 747
FALLS CHURCH, VA 22040-0747

REVIEWED BY DOCKETING 9/23/04

COPY MAILED

SEP 22 2004

OFFICE OF PETITIONS

In re Application of :
Takeru Watanabe :
Application No. 10/671,191 :
Filed: September 29, 2003 : ON PETITION
Attorney Docket Number :
0171-1021P :

This is a decision on the Petition in Response to Notice to File Corrected Application Papers, filed July 12, 2004, requesting the above-identified application be accorded a filing date of September 29, 2003, including pages 45 - 47 of the specification.

The petition is **granted**.

The application was filed on September 29, 2003. However, on June 7, 2004, the Office of Initial Patent Examination mailed a Notice to File Corrected Application Papers ("Notice"), informing Applicant that the application had been accorded a filing date; however, pages 45 - 47 of the specification and an abstract appeared to have been omitted from the application.

In response, Petitioner files the instant petition wherein Petitioner avers that pages pages 45 - 47 of the specification were included among 47 pages of Specification filed initially, on September 29, 2003, and were received by this Office as evidenced by the return-receipt postcard. In support, Petitioner provides a copy of a return receipt postcard acknowledging receipt of, *intern alia*, 47 pages of Specification filed on September 29, 2003.

A review of the return receipt postcard reveals that Petitioner is correct. The postcard acknowledges receipt of 47 pages of Specification by this Office on September 29, 2003. Petitioner has also re-submitted pages 45 - 47 of the specification, including an abstract, with the instant petition.

Evidence of receipt of any correspondence filed in the Patent and Trademark Office can be obtained by submitting a self-addressed postcard properly itemizing and identifying the paper or papers being filed. Upon receipt of the correspondence, the Patent and Trademark Office will check the listing on the post card against the papers submitted, making sure that all items listed are present and will then stamp the postcard with an Official date stamp and place the postcard in the outgoing mail. "A postcard receipt which itemizes and properly identifies the papers which are being filed serves as *prima facie* evidence of receipt in the PTO of all items listed thereon by the PTO." MPEP § 503.

Accordingly, the petition is granted The copy of pages 45 - 47 of the specification, supplied with the instant petition on July 12, 2004, will be used for examination purposes.

A refund of the petition fee has been credited to deposit account 02-2448 as authorized in the instant petition.

The application will be returned to the Office of Initial Patent Examination for further processing as a nonprovisional application with a filing date of September 29, 2003, and an indication that pages 45 - 47 of the Specification, including an abstract, were included among 47 pages of Specification that were present on filing on September 29, 2003.

Telephone inquiries concerning this matter should be directed to Petitions Attorney Derek L. Woods at (703) 305-0014.

Derek L. Woods
Petitions Attorney
Office of Petitions

UNITED STATES PATENT AND TRADEMARK OFFICE

Commissioner for Patents
United States Patent and Trademark Office
P.O. Box 1450
Alexandria, VA 22313-1450
www.uspto.gov

BACON & THOMAS, PLLC
625 SLATERS LANE
FOURTH FLOOR
ALEXANDRIA VA 22314

COPY MAILED

APR 26 2005

OFFICE OF PETITIONS

ON PETITION

In re Application of
Chin Yang Wang
Application No. 10/671,800
Filed: September 29, 2003
Attorney Docket No. WANG3197/EM

This is a decision on the petition filed March 22, 2005 under 37 CFR 1.137(b),[1] to revive the above-identified application.

The petition under 37 CFR 1.137 (b) is **GRANTED**.

This application became abandoned October 1, 2004 for failure to timely pay the issue fee on or before September 30, 2004. Accordingly, a Notice of Abandonment was mailed November 3, 2004.

The issue fee, petition fee and publication fee, have been applied. All other requirements of 37 CFR 1.137(b) having now been met, this application file is being forwarded to the Publishing Division to be processed into a patent.

Telephone inquiries concerning this matter may be directed to the undersigned Petitions Attorney at (571) 272-3212.

Patricia Faison-Ball
Senior Petitions Attorney
Office of Petitions

---

[1] Effective December 1, 1997, the provisions of 37 CFR 1.137(b) now provide that where the delay in reply was unintentional, a petition may be filed to revive an abandoned application or a lapsed patent pursuant to 37 CFR 1.137(b). A grantable petition filed under the provisions of 37 CFR 1.137(b) must be accompanied by:

(1) the required reply, unless previously filed. In a nonprovisional application abandoned for failure to prosecute, the required reply may be met by the filing of a continuing application. In a nonprovisional application filed on or after June 8, 1995, and abandoned for failure to prosecute, the required reply may also be met by the filing of a request for continued examination in compliance with § 1.114. In an application or patent, abandoned or lapsed for failure to pay the issue fee or any portion thereof, the required reply must be the payment of the issue fee or any outstanding balance thereof.

(2) the petition fee as set forth in 37 CFR 1.17(m);

(3) a statement that the entire delay in filing the required reply from the due date for the reply until the filing of a grantable petition pursuant to 37 CFR 1.137(b) was unintentional. The Commissioner may required additional information where there is a question whether the delay was unintentional; and

(4) any terminal disclaimer (and fee as set forth in 37 CFR 1.20(d)) required pursuant to 37 CFR 1.137(c)).

UNITED STATES PATENT AND TRADEMARK OFFICE

COMMISSIONER FOR PATENTS
UNITED STATES PATENT AND TRADEMARK OFFICE
P.O. BOX 1450
ALEXANDRIA, VA 22313-1450
www.uspto.gov

MAILED

OCT 09 2007

TECHNOLOGY CENTER 2100

HARNESS, DICKEY & PIERCE P.L.C.
5445 CORPORATE DRIVE
SUITE 200
TROY MI 48098

In re Application of: Jamil et al
Application No. 10/671,844
Attorney Docket No. MP1491
42P17407 (old #)
Filed: September 25, 2003
For: Apparatus and Method for Power Optimized Replay

DECISION ON PETITION

This is a decision on the petition under 37 CFR ' 1.8 (b), filed on September 29, 2006, to accept the copy of a response to the non-final Office action of January 10, 2006 as being timely filed.

The petition is **GRANTED**.

It is noted that a Notice of Abandonment was never mailed to the applicant. However, more than six months have passed since the mailing of the Office action of January 10, 2006.

The petition states that a timely response was mailed with Certificate of Mailing on April 10, 2006. The response includes an amendment. A copy of the previously mailed correspondence with certificate of mailing thereon were filed with the petition. A return postcard with a PTO date stamp was never received by applicant. Neither is there any indication of receipt of the papers filed in the PAIR system.

The original response was not of record and cannot be located. However, M.P.E.P. ' 503 states that A(a) post card receipt which itemizes and properly identifies the papers which are being filed serves as prima facie evidence of receipt in the PTO of all the items listed thereon on the date stamped thereon by the PTO. The copy of the post card receipt submitted with the petition itemizes and properly identifies that an amendment and response was filed on April 10, 2006. However post card receipt with a PTO date stamp was never received by the applicant, it does not establish receipt of the papers by the PTO. The M.P.E.P. at section 512 states that under 37 CFR 1.8, a person may state a certain paper directed to the Office (exceptions are stated in 37 CFR 1.8), as the date on which the paper will be deposited in the United States Postal Service or transmitted by facsimile. If the date stated is within the period for response, the response in most

instances will be considered to be timely. The copy of the response filed with the petition includes a Certificate of Mailing bearing a date of April 10, 2006, which makes it acceptable as being timely filed under 37 CFR ' 1.8(a).

Accordingly, in view of the above stated reasons, it is hereby accepted that a response to the Office action of January 10, 2006 was timely mailed. The application was not abandoned in fact.

The petition is **GRANTED**. The holding of abandonment is withdrawn.

The copy of the response submitted on April 10, 2006 is accepted as timely since the response originally submitted was apparently lost.

This application file is being forwarded to the Group technical support staff for entry of the copy of the amendment in place of the original. From there, the application file will be forwarded to the examiner for prompt reconsideration.

It is noted that the address of record is different from the return address on the petition. The petition decision is being sent to the current address on record, and a copy of the decision is being mailed to the return address on the petition.

Jack Harvey

Jack Harvey, Director
Technology Center 2100
Computer Architecture, Software,
and Information Security

cc:
BLAKELY, SOKOLOFF, TAYLOR & ZAFMAN LLP
12400 Wilshire Boulevard
Seventh Floor
Los Angeles, CA 90025

UNITED STATES PATENT AND TRADEMARK OFFICE

Commissioner for Patents
United States Patent and Trademark Office
P.O. Box 1450
Alexandria, VA 22313-1450
www.uspto.gov

DECHERT LLP
P.O. BOX 10004
PALO ALTO CA 94303

COPY MAILED
MAY 2 6 2004
OFFICE OF PETITIONS

In re Application of
Yang (Jeff) Jiao and Zhou (Mike) Hong
Application No.10/671,849
Filed: September 25, 2003
Attorney Docket No. 372465-01501
Title of Invention: ANTI-ALIASING LINE PIXEL COVERAGE CALCULATION USING PROGRAMMABLE SHADER

DECISION

This is in response to the petition under 37 CFR 1.47(a) filed March 10, 2004.

Petitioner has shown that non-signing inventor Hong has refused to join in the filing of the above-identified application after having been presented with the application papers. The petition attest a copy of the application papers was sent to the non-signing inventor's last known address. The non-signing inventor's failure to respond to the application mailing sufficiently establishes that he refuses to execute the application papers.

The above-identified application and papers have been reviewed and found in compliance with 37 CFR 1.47(a). This application is hereby accorded Rule 1.47(a) status.

As provided in Rule 1.47(c), this Office will forward notice of this application's filing to the non-signing inventor at the address given in the petition. Notice of the filing of this application will also be published in the Official Gazette.

This application is being forwarded to the Office of Initial Patent Examination for further processing.

BEST AVAILABLE COPY

Telephone inquiries regarding this communication should be directed to the undersigned at (703) 306-0251.

Charlema R. Grant

Charlema R. Grant
Petitions Attorney
Office of Petitions

BEST AVAILABLE COPY

UNITED STATES PATENT AND TRADEMARK OFFICE

Commissioner for Patents
United States Patent and Trademark Office
P.O. Box 1450
Alexandria, VA 22313-1450
www.uspto.gov

Zhou (Mike) Hong
11512 Country Spring Court
Cupertino, California 95014

In re Application of
Yang (Jeff) Jiao and Zhou (Mike) Hong
Application No.10/671,849
Filed: September 25, 2003
Attorney Docket No. 372465-01501
Title of Invention: ANTI-ALIASING LINE PIXEL COVERAGE CALCULATION USING PROGRAMMABLE SHADER

LETTER

COPY MAILED
MAY 2 6 2004
OFFICE OF PETITIONS

Dear Mr. Hong:

You are named as a joint inventor in the above-identified United States patent application filed under the provisions of 35 U.S.C. 116 (United States Code) and 37 C.F.R. § 1.47(a), Rules of Practice in Patent Cases. Should a patent be granted on the application you will be designated therein as a joint inventor.

As a named inventor you are entitled to inspect any paper in the file wrapper of the application, order copies of all or any part thereof (at a prepaid cost as per 37 C.F.R. § 1.19) or make your position of record in the application. Alternatively, you may arrange to do any of the preceding through a registered patent attorney or agent presenting written authorization from you. If you care to join the application, applicant (see below) would presumably assist you. Joining in the application would entail the filing of an appropriate oath or declaration by you pursuant to 37 C.F.R. § 1.63.

Telephone inquiries regarding this communication should be directed to Petitions Attorney Charlema R. Grant at (703) 306-0251. Requests for information regarding your application should be directed to the File Information Unit at (703) 308-2733. Information regarding how to pay for and order a copy of the application, or a specific paper in the application, should be directed to Certification Division at (703) 308-9726 or 1-800-972-6382 (outside the Washington D.C. area).

Charlema R. Grant
Petitions Attorney
Office of Petitions

ANTHONY B. DIEPENBROCK III
DECHERT LLP
P.O. BOX 10004
PALO ALTO CA 94303

BEST AVAILABLE COPY

UNITED STATES PATENT AND TRADEMARK OFFICE

Commissioner for Patents
United States Patent and Trademark Office
P.O. Box 1450
Alexandria, VA 22313-1450
www.uspto.gov

Paper No.

Schwartz Law Firm, P.C.
SouthPark Towers
Suite 530
6100 Fairview Road
Charlotte, NC 28210

COPY MAILED

FEB 27 2006

OFFICE OF PETITIONS

In re Application of	:	
Ricky McCorkle	:	DECISION ON PETITION
Application No. 10/671,852	:	
Filed: September 26, 2003	:	
Atty Docket No. 198/1	:	

This is a decision on the "PETITION TO THE COMMISSIONER TO WITHDRAW HOLDING OF ABANDONMENT," filed August 8, 2005 (certificate of mailing dated August 5, 2005).

The petition under § 1.181 is **GRANTED**.

The above-identified application became abandoned as a result of petitioner's failure to timely file a response to the non-final Office action mailed November 17, 2004. This Office action set a three-month shortened statutory period for reply, with extensions of time obtainable under § 1.136(a). No reply having been made of record in the application and no extension of time obtained, the application became abandoned on February 18, 2005. A Notice of Abandonment was mailed on June 3, 2005.

In response, petitioner filed the instant petition (with a certificate of mailing dated August 5, 2005, a Wednesday). Preliminarily, petitioner is reminded that pursuant to 1.181(f), a petition to withdraw holding of abandonment filed more than 2 months after the mailing of the notice of abandonment may be dismissed as untimely filed without consideration on the merits. In this instance, the Director shall exercise his discretion in favor of petitioner and consider this matter on the merits.

Petitioner asserts that the applicant did file a Response to the Office letter, and in a timely fashion prior to the statutory deadline of May 17, 2005. Petitioner states that the Response was submitted on February 17, 2005. In support thereof, petitioner submits copies of the reply and the return-postcard receipt.

A postcard receipt which itemizes and properly identifies the items which are being filed serves as *prima facie* evidence of receipt in the USPTO of all the items listed thereon on the date stamped thereon by the USPTO. See MPEP 503. A review of applicant's postcard reveals that it specifically itemizes as being filed a Response to Office Action dated November 17, 2004. It lacks notation of non-receipt of any item denoted. It bears a date-stamp of receipt of February 22, 2005.

In addition, a review of the Response reveals that it bears a proper certificate of mailing under 37 C.F.R. § 1.8(a), executed by Kristen Salgado and certifying timely mailing on February 17, 2005[1]. Considering the evidence, it is concluded that petitioner has shown that a reply should be considered timely filed.

Accordingly, withdrawal of the holding of abandonment pursuant to § 1.8(b) is warranted.

In view thereof, a response is considered timely filed, the Notice of Abandonment is hereby **VACATED**, and the holding of abandoned is hereby **WITHDRAWN**.

Technology Center AU 3724 has been advised of this decision. The application file is, thereby, forwarded to Technology Center 3724 for consideration of the Reply resubmitted on petition.

Telephone inquiries concerning this decision should be directed to the undersigned at (571) 272-3219.

Nancy Johnson
Senior Petitions Attorney
Office of Petitions

---

[1] It is noted that the Response included the wrong application number. However, the remaining identifying information was correct.

UNITED STATES PATENT AND TRADEMARK OFFICE

Commissioner for Patents
United States Patent and Trademark Office
P.O. Box 1450
Alexandria, VA 22313-1450
www.uspto.gov

GREENBERG TRAURIG, LLP
MET LIFE BUILDING
200 PARK AVENUE
NEW YORK, NY 10166

COPY MAILED

APR 17 2007

OFFICE OF PETITIONS

In re Patent No. 7,097,008	:	
Issue Date: August 29, 2006	:	
Application No. 10/671,856	:	ON PETITION
Filed: September 25, 2003	:	
Attorney Docket No. 1107348-0008	:	

This is a decision on the petition filed November 9, 2006, which is being treated as a petition under 37 CFR 3.81(b)[1] to correct assignee's name on the front page of the above-identified patent by way of a Certificate of Correction.

The petition is **granted.**

Telephone inquiries concerning this matter may be directed to the undersigned at (571) 272-3210. Any questions concerning the issuance of the Certificate of Correction should be directed to the Certificates of Correction Branch at (703) 305-8309.

This application is being forwarded to the Certificates of Correction Branch for issuance of the requested Certificate of Correction.

Irvin Dingle
Petitions Examiner
Office of Petitions

[1] See Official Gazette of June 22, 2004

UNITED STATES PATENT AND TRADEMARK OFFICE

COMMISSIONER FOR PATENTS
UNITED STATES PATENT AND TRADEMARK OFFICE
P.O. BOX 1450
ALEXANDRIA, VA 22313-1450
www.uspto.gov

APR 27 2004

CHARLES F. MERONI, Jr.
P.O. BOX 309
BARRINGTON, IL 60011

In re Application of	:	
Gillen et al.	:	
Serial No. 10/671,858	:	DECISION ON PETITION
Filed: January 1, 2001	:	TO MAKE SPECIAL
For: Protective Body Vest	:	

This is in response to applicants' petition filed February 27, 2004 to make the above-identified application special under the provisions of 37 CFR 1.102(a), based on applicant's health condition.

Applicant has satisfied the provisions set forth in M.P.E.P. 708.02, IV with supporting documentation. Therefore, the petition is hereby **GRANTED**.

The application will be forwarded to the examiner for action on the merits to commensurate with the decision.

Should there be any questions with regard to this letter please contact John E. Kittle by letter addressed to the Director, Technology Center 3700/2900, P.O. Box 1450 Alexandria, VA 22313-1450, or by telephone at (703)308-0873 or by facsimile transmission at (703) 308-3139.

John E. Kittle
Director
Technology Center 3700/2900

UNITED STATES PATENT AND TRADEMARK OFFICE

Commissioner for Patents
United States Patent and Trademark Office
P.O. Box 1450
Alexandria, VA 22313-1450
www.uspto.gov

SCHWABE WILLIAMSON & WYATT PC
PACWEST CENTER, SUITES 1600-1900
1211 SW FIFTH AVENUE
PORTLAND, OR 97204

COPY MAILED

AUG 0 2 2004

OFFICE OF PETITIONS

In re Application of	:
Michael Lee et al	:
Application No. 10/671,861	: DECISION REFUSING STATUS
Filed: September 25, 2003	: UNDER 37 CFR 1.47(a)
Attorney Docket No. 013590-133022	:

This is in response to the petition under 37 CFR 1.47(a), filed June 18, 2004.

The petition is dismissed.

Rule 47 applicant is given TWO MONTHS from the mailing date of this decision to reply, correcting the below-noted deficiencies. Any reply should be entitled "Request for Reconsideration of Petition Under 37 CFR 1.47(a)," and should only address the deficiencies noted below, except that the reply may include an oath or declaration executed by the nonsigning inventor. **FAILURE TO RESPOND WILL RESULT IN ABANDONMENT OF THE APPLICATION.** Any extensions of time will be governed by 37 CFR 1.136(a).

A grantable petition under 37 CFR 1.47(a) requires: (1) proof that the nonsigning inventor cannot be reached or refuses to sign the oath or declaration after having been presented with the application papers (specification, claims and drawings); (2) an acceptable oath or declaration in compliance with 35 U.S.C. §§ 115 and 116; (3) the petition fee; and (4) a statement of the last known address of the nonsigning inventor. Applicant lacks item (4) set forth above.

A statement as to the last known address of nonsigning inventor Vidar Solli is missing and is required.

Further correspondence with respect to this matter should be addressed as follows:

By mail: Mail Stop PETITIONS
Commissioner for Patents
Post Office Box 1450
Alexandria, VA 22313-1450

By hand: Customer Window located at:

U.S. Patent and Trademark Office
220 20th Street S
Customer Window, Mail Stop Petitions
Crystal Plaza Two Lobby, Room 1B03
Arlington, VA 22202

By fax: (703) 872-9306[1]
ATTN: Office of Petitions

Any questions concerning this matter may be directed to the undersigned at (703) 305-8680.

Frances Hicks

Frances Hicks
Petitions Examiner
Office of Petitions
Office of the Deputy Commissioner
for Patent Examination Policy

[1] Effective approximately September 28, 2004, the facsimile number will be 571-273-0025, which is when the Office of Petitions expects to move to the new quarters in Alexandria, Virginia. However, this number is not to be used for submitting formal papers, but merely is to be used for receiving courtesy and informal papers and petitions to withdraw from issue only. Courtesy and informal papers will not be made a part of the file record.

UNITED STATES PATENT AND TRADEMARK OFFICE

Commissioner for Patents
United States Patent and Trademark Office
P.O. Box 1450
Alexandria, VA 22313-1450
www.uspto.gov

SCHWABE WILLIAMSON & WYATT, P.C.
PACWEST CENTER, SUITES 1600-1900
1211 SW FIFTH AVENUE
PORTLAND, OR 97204

COPY MAILED

NOV 18 2004

OFFICE OF PETITIONS

In re Application of	:
Michael Lee et al	:
Application No. 10/671,861	: DECISION GRANTING STATUS
Filed: September 25, 2003	: UNDER 37 CFR 1.47(A)
For: IDENTIFYING DEFECTS IN	:
DECORATIVE WOOD PANELS	:

This is a decision on the petition filed August 18, 2004, requesting reconsideration of a decision mailed August 2, 2004, which refused to accord 37 CFR 1.47(a) status to the above-identified application.

The petition is granted.

Petitioner has shown that the non-signing inventor has refused to join in the filing of the above-identified application.

The above-identified application and papers have been reviewed and found in compliance with 37 CFR 1.47(a). This application is hereby accorded Rule 1.47(a) status. As provided in Rule 1.47(c), this Office will forward notice of this application's filing to the non-signing inventor at the address given in the petition. Notice of the filing of this application will also be published in the Official Gazette.

Telephone inquiries regarding this decision should be directed to Petitions Examiner Wan Laymon at (571) 272-3220.

This matter is being referred to the Office of Initial Patent Examination for preexamination processing.

Frances Hicks

Frances Hicks
Lead Petitions Examiner
Office of Petitions
Office of the Deputy Commissioner
for Patent Examination Policy

UNITED STATES PATENT AND TRADEMARK OFFICE

COMMISSIONER FOR PATENTS
UNITED STATES PATENT AND TRADEMARK OFFICE
P.O. BOX 1450
ALEXANDRIA, VA 22313-1450
www.uspto.gov

SCHIFF HARDIN & WAITE
PATENT DEPARTMENT
6600 SEARS TOWER
233 SOUTH WACKER DRIVE
CHICAGO IL 60606

COPY MAILED

MAR 3 1 2004

OFFICE OF PETITIONS

In re Application of
Herbert Bruder et al.
Application No. 10/671,894
Filed: September 26, 2003
Attorney Docket No. P03,0333

DECISION ACCORDING STATUS
UNDER 37 CFR 1.47(a)

This is in response to the petition under 37 CFR 1.47(a), filed February 9, 2004.

The petition is **GRANTED**.

The above-identified application named Herbert Bruder, Thomas Flohr, Karl Stierstorfer and Kwok Tam as co-inventors but was filed on September 26, 2003 with an un-executed oath or declaration.

Accordingly, on December 18, 2003, a "Notice To File Missing Parts of Application" was mailed, requiring an executed oath or declaration and a surcharge for its ate filing. A two month period for reply was set.

In response, on February 9, 2004, the instant petition under 37 CFR 1.47(a) and a declaration executed only by co-inventors Bruder, Flohr and Stierstorfer was filed. The petition claims that co-inventor Tam refused to execute the declaration. Co-inventor Tam's last known address and the required fees were also submitted. The petition bears proof that the application papers were sent by courier to Mr. Tam on September 29, 2003 and that the application papers were received by Mr. Tam.

A grantable petition under 37 CFR 1.47(a) requires: (1) proof that the non-signing inventor cannot be reached or refuses to sign the oath or declaration after having been presented with the application papers (specification, claims and drawings); (2) an acceptable oath or declaration in compliance with 35 U.S.C. §§ 115 and 116; (3) the petition fee; and (4) a statement of the last known address of the non-signing inventor.

The above-identified application and papers have been reviewed and found in compliance with 37 CFR 1.47(a). In view thereof, this application is hereby accorded Rule 1.47(a) status.

Thus, as provided in Rule 1.47(c), this Office will forward notice of this application's filing to the non-signing inventor at the address given in the petition. Notice of the filing of this application will also be published in the Official Gazette.

The application is being forwarded to the Office of Initial Patent Examination for further processing.

Telephone inquiries related to this decision should be directed to the undersigned Petitions Attorney at (703) 305-4497.

Patricia Faison-Ball

Patricia Faison-Ball
Senior Petitions Attorney
Office of Petitions

UNITED STATES PATENT AND TRADEMARK OFFICE

COMMISSIONER FOR PATENTS
UNITED STATES PATENT AND TRADEMARK OFFICE
P.O. BOX 1450
ALEXANDRIA, VA 22313-1450
www.uspto.gov

KWOK TAM
24 SAGAMORE AVENUE
EDISON, NJ 08820

COPY MAILED

MAR 3 1 2004

OFFICE OF PETITIONS

In re Application of
Herber Bruder et al.
Application No. 10/671,894
Filed: September 26, 2003
Title of Invention: METHOD FOR GENERATING AN IMAGE BY MEANS OF A TOMOGRAPHY CAPABLE X-RAY DEVICE WITH MULTI-ROW X-RAY DETECTOR ARRAY

Dear Mr. Tam:

You are named as a joint inventor in the above identified United States patent application, filed under the provisions of 35 U.S.C. 116 (United States Code), and 37 CFR 1.47(a), Rules of Practice in Patent Cases. Should a patent be granted on the application you will be designated therein as a joint inventor.

As a named inventor you are entitled to inspect any paper in the file wrapper of the application, order copies of all or any part thereof (at a prepaid cost per 37 CFR 1.19) or make your position of record in the application. Alternatively, you may arrange to do any of the preceding through a registered patent attorney or agent presenting written authorization from you. If you care to join the application, counsel of record (see below) would presumably assist you. Joining in the application would entail the filing of an appropriate oath or declaration by you pursuant to 37 CFR 1.63.

Telephone inquiries regarding this communication should be directed to the undersigned Petitions Attorney at (703) 305-4497. Requests for information regarding your application should be directed to the File Information Unit at 703/308-2733. Information regarding how to pay for and order a copy of the application, or a specific paper in the application, should be directed to Certification Division at 703/308-9726 or 1-800-972-6382 (outside the Washington D.C. area).

Patricia Faison-Ball

Patricia Faison-Ball
Senior Petitions Attorney
Office of Petitions

cc:
SCHIFF HARDIN & WAITE
PATENT DEPARTMENT
6600 SEARS TOWER
233 SOUTH WACKER DRIVE
CHICAGO IL 60606

UNITED STATES PATENT AND TRADEMARK OFFICE

Commissioner for Patents
United States Patent and Trademark Office
P. O. Box 1450
Alexandria, VA 22313-1450
www.uspto.gov

REED SMITH, LLP
TWO EMBARCADERO CENTER
SUITE 2000
SAN FRANCISCO CA 94111

COPY MAILED
SEP 25 2008

In re Application of	:	
Eric Welch	:	
Application No. 10/671,896	:	DECISION GRANTING PETITION
Filed: September 25, 2003	:	UNDER 37 CFR 1.137(b)
Attorney Docket No. 356575.00020	:	

This is a decision on the petition, filed April 18, 2008, which is being treated as a petition under 37 CFR 1.137(b) to revive the instant nonprovisional application for failure to timely notify the U.S. Patent and Trademark (USPTO) of the filing of an application in a foreign country, or under a multinational treaty that requires publication of applications eighteen months after filing. *See* 37 CFR 1.137(f).

The petition is **GRANTED**.

Petitioner states that the instant nonprovisional application is the subject of an application filed in an eighteen-month publication country on September 10, 2004. However, the USPTO was unintentionally not notified of this filing within 45 days subsequent to the filing of the subject application in an eighteen-month publication country.

In view of the above, this application became abandoned pursuant to 35 U.S.C. § 122(b)(2)(B)(iii) and 37 CFR 1.213(c) for failure to timely notify the Office of the filing of an application in a foreign country or under a multilateral international agreement that requires publication of applications 18 months after filing.

A petition to revive an application abandoned pursuant to 35 U.S.C. 122(b)(2)(B)(iii) for failure to notify the USPTO of a foreign filing must be accompanied by:

(1) the required reply which is met by the notification of such filing in a foreign country or under a multinational treaty;
(2) the petition fee as set forth in 37 CFR 1.17(m); and
(3) a statement that the entire delay in filing the required reply from the due date of the reply until the filing of a grantable petition was unintentional.

The instant petition has been found to be in compliance with 37 CFR 1.137(b). Accordingly, the failure to timely notify the USPTO of a foreign or international filing within 45 days after the date of filing of such foreign or international application as provided by 35 U.S.C. § 122(b)(2)(B)(iii) and 37 CFR 1.213(c) is accepted as having been unintentionally delayed.

The previous Request and Certification under 35 U.S.C. § 122(b)(2)(B)(i) has been rescinded. A Notice Regarding Rescission of Nonpublication Request which sets forth the projected publication date of accompanies this decision on petition.

Telephone inquiries concerning this decision should be directed to the undersigned at (571) 272-3222.

This application is being forwarded to Technology Center Art Unit 3152 for examination in due course.

Kenya A. McLaughlin
Petitions Attorney
Office of Petition

ATTACHMENT: Notice Regarding Rescission of Nonpublication Request

UNITED STATES PATENT AND TRADEMARK OFFICE

UNITED STATES DEPARTMENT OF COMMERCE
United States Patent and Trademark Office
Address: COMMISSIONER FOR PATENTS
P.O. Box 1450
Alexandria, Virginia 22313-1450
www.uspto.gov

APPLICATION NUMBER	FILING OR 371(C) DATE	FIRST NAMED APPLICANT	ATTY. DOCKET NO./TITLE
10/671,896	09/25/2003	Eric Welch	356575.00020

CONFIRMATION NO. 7991

58076
REED SMITH, LLP
TWO EMBARCADERO CENTER
SUITE 2000
SAN FRANCISCO, CA 94111

NONPUBLICATION RESCISSION LETTER

OC000000032237465

Date Mailed: 09/23/2008

Communication Regarding Rescission Of Nonpublication Request and/or Notice of Foreign Filing

Applicant's rescission of the previously-filed nonpublication request and/or notice of foreign filing is acknowledged. The paper has been reflected in the Patent and Trademark Office's (USPTO's) computer records so that the earliest possible projected publication date can be assigned.

The projected publication date is 01/01/2009.

If applicant rescinded the nonpublication request before or on the date of "foreign filing,"[1] then no notice of foreign filing is required.

If applicant foreign filed the application after filing the above application and before filing the rescission, and the rescission did not also include a notice of foreign filing, then a notice of foreign filing (not merely a rescission) is required to be filed within 45 days of the date of foreign filing. See 35 U.S.C. § 122(b)(2)(B)(iii), and Clarification of the United States Patent and Trademark Office's Interpretation of the Provisions of 35 U.S.C. § 122(b)(2)(B)(ii)-(iv), 1272 Off. Gaz. Pat. Office 22 (July 1, 2003).

If a notice of foreign filing is required and is not filed within 45 days of the date of foreign filing, then the application becomes abandoned pursuant to 35 U.S.C. § 122(b)(2)(B)(iii). In this situation, applicant should either file a petition to revive or notify the Office that the application is abandoned. See 37 CFR 1.137(f). Any such petition to revive will be forwarded to the Office of Petitions for a decision. Note that the filing of the petition will not operate to stay any period of reply that may be running against the application.

Questions regarding petitions to revive should be directed to the Office of Petitions at (571) 272-3282.

[1] Note, for purpose of this notice, that "foreign filing" means "filing an application directed to the same invention in another country, or under a multilateral international agreement, that requires publication of applications 18 months after filing".

/kathornton mclaughl/

Office of Data Management, Application Assistance Unit (571) 272-4000, or (571) 272-4200, or 1-888-786-0101

UNITED STATES PATENT AND TRADEMARK OFFICE

Commissioner for Patents
United States Patent and Trademark Office
P.O. Box 1450
Alexandria, VA 22313-1450
www.uspto.gov

THERMO FINNIGAN LLC
355 RIVER OAKS PARKWAY
SAN JOSE CA 95134

MAILED

APR 02 2010

OFFICE OF PETITIONS

In re Patent No. 6,808,635	:	
Issue Date: October 26, 2004	:	
Application No. 10/671,900	:	ON PETITION
Filed: September 26, 2003	:	
Attorney Docket No. 3176US2/NAT	:	

This is a notice regarding your request for acceptance of a fee deficiency submission under 37 CFR 1.28. On September 1, 1998, the Court of Appeals for the Federal Circuit held that 37 CFR 1.28(c) is the sole provision governing the time for correction of the erroneous payment of the issue fee as a small entity. **See DH Technology v. Synergystex International, Inc. 154 F.3d 1333, 47 USPQ2d 1865 (Fed. Cir. Sept. 1, 1998).**

The Office no longer investigates or rejects original or reissue applications under 37 CFR 1.56. **1098 Off. Gaz. Pat. Office 502 (January 3, 1989)**. Therefore, nothing in this Notice is intended to imply that an investigation was done.

Your fee deficiency submission under 37 CFR 1.28 is hereby **ACCEPTED**.

This patent is no longer entitled to small entity status. Accordingly, all future fees paid in this patent must be paid at the large entity rate.

Telephone inquiries concerning this decision should be directed to the undersigned at (571) 272-7751.

Joan Olszewski

Joan Olszewski
Petitions Examiner
Office of Petitions

UNITED STATES PATENT AND TRADEMARK OFFICE

Commissioner for Patents
United States Patent and Trademark Office
P.O. Box 1450
Alexandria, VA 22313-1450
www.uspto.gov

7/20/07

SCHWEGMAN, LUNDBERG,
WOESSNER & KLUTH, P.A.
P.O. BOX 2938
MINNEAPOLIS MN 55402

In re Application of:
SOLAR, MATTHEW S. et al.
Serial No.: 10/671,913
Filed: Sep. 25, 2003
Docket: 723.061US1
Title: BALL AND SOCKET TRAJECTORY GUIDE

DECISION ON PETITION

This is a decision on the petition filed on Jan. 5, 2007 by which petitioner requests reconsideration and withdrawal of the restriction requirement mailed Aug. 8, 2006, and that non-elected claims 8, 10, 13, 24, 26-28 and 30-34 be rejoined and examined on the merits. Claims 1-3, 5, 6, 9, 11, 12, 14-23 and 25 were elected for prosecution. This petition is considered as if pursuant to 37 CFR 1.144 and 37 CFR 1.181, and no fee is required.

The petition is **DISMISSED**.

A review of the record reveals that a restriction requirement was made between two disclosed and claimed related inventions: I) an alignment device and II) a method of manufacturing an alignment device. Claims 1-3, 5, 6, 8-20 and 22-25 are drawn to the alignment device, and claims 26-28 and 30-34 are drawn to the method of manufacturing the alignment device.

In judging the propriety of the restriction requirement, the related inventions, as claimed, must be shown to be distinct. See MPEP 802.01. The inventions can be shown to be distinct if either or both of the following can be shown: (1) the process as claimed can be used to make another and materially different product or (2) the product as claimed can be made by another and materially different process. See MPEP 806.05(f).

In the instant application, the distinctness between the claimed inventions was justified in that the product as claimed can be made by another and materially different process, such as blow molding or extrusion.

Petitioner traverses the rationale set forth above by basically arguing that the method claims necessarily requires a "forming" limitation. In the petition, petitioner states 'There is no objective evidence anywhere in the present specification that the term "forming" was intended to exclude "blow molding" or "extrusion" or any other particular process of "forming"'. Petitioner

is essentially saying that because the method claims have "forming" steps, the forming steps would encompass "blow molding" or "extrusion" when making the product as claimed. Therefore, there would be no distinction between the method of making claims and the product claims.

However, such traversal is not persuasive because not all of the manufacturing steps in the method claims require "forming" steps. Method claim 26 positively recites the limitation "*attaching* a spherical portion to an end of the longitudinal guide portion" [emphasis added]. Attaching clearly does not encompass blow molding or extrusion. Therefore, the spherical portion could be made unitarily with the longitudinal guide portion by blow molding or extruding together instead of using an assembly operation such as attaching the spherical portion to the end of the longitudinal guide portion.

Furthermore, as part of any restriction requirement, the search and examination for each of these two claimed inventions must be considered a serious burden on the examiner if restriction were not required. See MPEP 803 and 808.02. Aside from the different classifications indicated in the requirement, the search for the process claims would involve a search in areas such as where assembling methods are found, for example in class 29, etc., which are diverse from the search for the product claims.

In addition to the above restriction requirement, the examiner also required an election of species between the embodiments represented by Figures 1A-4. The requirement translates alleged species I depicted by Figures 1A-1C, species II depicted by Figure 2, species III depicted by Figures 3A-3C, species IV depicted by Figure 4, and species V depicted by Figure 5.

Petitioner's position is that the election of species requirement fails to give any reasons or examples of what renders the asserted species I-V patentably distinct. In addition, petitioner states that the requirement fails to show a serious burden by appropriate explanation of a separate classification, or separate status in the art, or a different field of search. Respectfully, these points are not well taken in that the examiner has indicated how each of the species is patentably distinct on pages 2-3 of the restriction requirement. In addition, requirements for restriction between distinct inventions (related as disclosed) are described in MPEP 806.05-806.05(j) and necessarily require a showing of separate classification, separate status in the art, or a different field of search. MPEP 808.01(a) proscribes the definition of species as "Where there is no disclosure of relationship between species (MPEP 806.04(b)), they are independent inventions and election to one invention following a requirement for restriction is mandatory even though applicant disagrees with the examiner.". There must be a patentable difference between the species as claimed. See MPEP 806.04(h). Since the claims are directed to independent inventions, restriction is proper pursuant to 35 USC 121 and it is *not necessary to show a separate status in the art or separate classification* [emphasis added]. Therefore, arguments to the procedural failure of an election of species requirement for not explaining the relation between inventions or providing an allegation of serious burden are not persuasive here.

Applicant's argument that claim 1 is a generic claim because the examiner has not provided any objective explanation for why the language of claim 1 is not generic is noted. However, in view of the amendment to the claims in the response filed May 29, 2007, all of the pending

independent claims now require a "shelf" as shown in the elected species depicted in Figure 3C. Therefore, claim 1 nor any of the other pending independent claims are generic because "shelf" was added to these claims.

Conclusion

For the reasons outlined above, the restriction requirement promulgated in the restriction requirement dated Aug. 8, 2006 is in accordance with proper Office procedure. Accordingly, the Office action stands. Therefore, the examiner's restriction requirement is proper.

The application is being forwarded to Supervisory Patent Examiner of Art Unit 3731 for further processing. Any request for reconsideration of this decision must be submitted within TWO (2) MONTHS from the mail date of this decision, 37 CFR 1.181(f). No extension of time under 37 CFR 1.136(a) is permitted. The reconsideration request should include a cover letter entitled "Renewed Petition under 37 CFR 1.181". Any inquiry regarding this decision should be directed to Marc Jimenez, Training Quality Assurance Specialist, at (571) 272-4530.

The petition is DISMISSED.

Frederick R. Schmidt, Director
Technology Center 3700

UNITED STATES PATENT AND TRADEMARK OFFICE

Commissioner for Patents
United States Patent and Trademark Office
P.O. Box 1450
Alexandria, VA 22313-1450
www.uspto.gov

Schwegman, Lundberg, & Woessner, P.A.
P.O. Box 2938
Minneapolis, MN 55402

COPY MAILED

NOV 15 2007

OFFICE OF PETITIONS

In re Application of	:	
Matthew S. Solar et al.	:	
Application No. 10/671,913	:	DECISION ON PETITION
Filed: September 25, 2003	:	TO WITHDRAW
Attorney Docket No. 50741-000019/US	:	FROM RECORD
	:	

This is a decision on the Request to Withdraw as attorney or agent of record under 37 C.F.R. § 1.36(b), filed June 27, 2007.

The request is **APPROVED**.

A grantable request to withdraw as attorney/agent of record must be signed by every attorney/agent seeking to withdraw or contain a clear indication that one attorney is signing on behalf of another/others. A request to withdraw will not be approved unless at least 30 (thirty) days would remain between the date of approval and the later of the expiration date of a time to file a response or the expiration date of the maximum time period which can be extended under 37 C.F.R. § 1.136(a).

The request was signed by David C. Peterson on behalf of all attorneys of record. All attorneys/agents have been withdrawn.

The correspondence address of record has been changed and the new correspondence address is the address indicated below.

There is no outstanding Office action at this time.

Telephone inquiries concerning this decision should be directed to Terri Williams at 571-272-2991.

T. Williams

Terri Williams
Petitions Examiner
Office of Petitions

cc: **Harness, Dickey & Pierce, P.L.C.**
P.O. Box 828
Bloomfield Hills, MI 48303

UNITED STATES PATENT AND TRADEMARK OFFICE

Commissioner for Patents
United States Patent and Trademark Office
P.O. Box 1450
Alexandria, VA 22313-1450
www.uspto.gov
DIW 12-04

MAURICE M. LYNCH
479 CHURCH AVENUE
WARWICK RI 02889

COPY MAILED

DEC 0 2 2004

OFFICE OF PETITIONS

In re Application of Zayat et al. Application No. 10/671,920 Filed: 25 September, 2003 Att'y Docket No. Stripping tool for the removal of paint, fiberglass, eposy, and resin from two surfaces simultaneously	ON PETITION

This is a decision on the petition under 1.137(b),[1] filed on 14 October, 2004, to revive the above-identified application.

The petition is **GRANTED**.

This application became abandoned on 29 February, 2004, for failure to file a timely response to the Notice to File Corrected

---

[1]Effective December 1, 1997, the provisions of 37 CFR 1.137(b) now provide that where the delay in reply was unintentional, a petition may be filed to revive an abandoned application or a lapsed patent pursuant to 37 CFR 1.137(b). A grantable petition filed under the provisions of 37 CFR 1.137(b) must be accompanied by:

(1) the required reply, unless previously filed. In a nonprovisional application abandoned for failure to prosecute, the required reply may be met by the filing of a continuing application. In a nonprovisional application filed on or after June 8, 1995, and abandoned for failure to prosecute, the required reply may also be met by the filing of a request for continued examination in compliance with § 1.114. In an application or patent, abandoned or lapsed for failure to pay the issue fee or any portion thereof, the required reply must be the payment of the issue fee or any outstanding balance thereof. In an application abandoned for failure to pay the publication fee, the required reply must include payment of the publication fee.

(2) the petition fee as set forth in 37 CFR 1.17(m);

(3) a statement that the entire delay in filing the required reply from the due date for the reply until the filing of a grantable petition pursuant to 37 CFR 1.137(b) was unintentional. The Commissioner may required additional information where there is a question whether the delay was unintentional; and

(4) any terminal disclaimer (and fee as set forth in 37 CFR 1.20(d)) required pursuant to 37 CFR 1.137(c)).

Application Papers mailed on 30 December, 2003, which set a two (2) month shortened period for reply. No extensions of the time for reply in accordance with 37 CFR 1.136(a) were obtained. The filing of the present petition precedes the mailing of Notice of Abandonment.

The application file is being referred to the Office of Initial Patent Examination for further processing.

Telephone inquiries concerning this matter may be directed to the undersigned at (571)272-3231.

D Wood

Douglas I. Wood
Senior Petitions Attorney
Office of Petitions

UNITED STATES PATENT AND TRADEMARK OFFICE

Commissioner for Patents
United States Patent and Trademark Office
P.O. Box 1450
Alexandria, VA 22313-1450
www.uspto.gov

MCGINN INTELLECTUAL PROPERTY LAW GROUP, PLLC
8321 OLD COURTHOUSE ROAD
SUITE 200
VIENNA VA 22182-3817

MAILED
JUN 17 2009
OFFICE OF PETITIONS

In re Application of	:	
Gustavson et al.	:	
Application No.: 10/671937	:	ON PETITION
Filing or 371(c) Date: 09/29/2003	:	
Attorney Docket Number: YOR920030171	:	

This is a decision on the petition under the unintentional provisions of 37 CFR 1.137(b), filed May 14, 2009, to revive the above-identified application.

The petition is **GRANTED**.

This application became abandoned for failure to timely pay the issue and publication fees on or before April 2, 2009, as required by the Notice of Allowance and Fee(s) Due, mailed January 2, 2009. Accordingly, the date of abandonment of this application is April 3, 2009.

The petition satisfies the requirements of 37 CFR 1.137(b) in that petitioner has supplied (1) the reply in the form of payment of the issue fee; (2) the petition fee; and (3) a proper statement of unintentional delay.

Telephone inquiries concerning this matter should be directed to the undersigned at (571) 272-3232.

This application is being referred to the Office of Data Management for processing into a patent.

/Derek L. Woods/
Derek L. Woods
Attorney
Office of Petitions

10/671 947

SPE RESPONSE FOR CERTIFICATE OF CORRECTION

Paper No.:7132005

DATE : July 13, 2005

TO SPE OF : ART UNIT 3643

6886293

SUBJECT : Request for Certificate of Correction on Patent No.: 10/671947

A response is requested with respect to the accompanying request for a certificate of correction.

Please complete this form and return with file, within **7** days to:
Certificates of Correction Branch - PK 3-910
Palm location **7590** - Tel. No. 305-8201

With respect to the change(s) requested, correcting Office and/or Applicant's errors, should the patent read as shown in the certificate of correction? No new matter should be introduced, nor should the scope or meaning of the claims be changed.

Eva James

Thank You For Your Assistance **Certificates of Correction Branch**

The request for issuing the above-identified correction(s) is hereby:
Note your decision on the appropriate box.

☒ **Approved** All changes apply.

☐ **Approved in Part** Specify below which changes **do not** apply.

☐ **Denied** State the reasons for denial below.

Comments:

Peter Poon

PETER M. POON
SUPERVISORY PATENT EXAMINER

7/13/05

SPE: Peter Poon **Art Unit** 3643

UNITED STATES PATENT AND TRADEMARK OFFICE

Commissioner for Patents
United States Patent and Trademark Office
P.O. Box 1450
Alexandria, VA 22313-1450
www.uspto.gov

COPY MAILED

APR 19 2007

OFFICE OF PETITIONS

HARRIS ZIMMERMAN
LAW OFFICES OF HARRIS ZIMMERMAN
SUITE 710
1330 BROADWAY
OAKLAND, CA 94612-2506

In re Application of	:	
Denny Jaeger	:	
Application No. 10/671,952	:	ON PETITION
Filed: September 26, 2003	:	
Attorney Docket No. 4337	:	

This is a decision on the petition, filed October 31, 2006, under 37 CFR 1.137(b) to revive the above-identified application.

The petition is **DISMISSED.**

Any request for reconsideration of this decision must be submitted within TWO (2) MONTHS from the mail date of this decision. Extensions of time under 37 CFR 1.136(a) are permitted. The reconsideration request should include a cover letter entitled "**Renewed Petition under 37 CFR 1.137(b)**." This is **not** final agency action within the meaning of 5 U.S.C. § 704.

A grantable petition under 37 CFR 1.137(b) must be accompanied by: (1) the required reply, unless previously filed; (2) the petition fee as set forth in 37 CFR 1.17(m); (3) a statement that the entire delay in filing the required reply from the due date for the reply until the filing of a grantable petition pursuant to 37 CFR 1.137(b) was unintentional; and (4) any terminal disclaimer (and fee as set forth in 37 CFR 1.20(d)) required by 37 CFR 1.137(c). Where there is a question as to whether either the abandonment or the delay in filing a petition under 37 CFR 1.137 was unintentional, the Commissioner may require additional information. See MPEP 711.03(c)(III)(C) and (D). The instant petition lack(s) item(s) (1).

The above-identified application became abandoned for failure to reply within the meaning of 37 CFR 1.113 in a timely manner to the final Office action mailed December 13, 2005, which set a shortened statutory period for reply of three (3) months. A reply under 37 CFR 1.113 is limited to an amendment that *prima facie* places the application in condition for allowance or a Notice of Appeal (and appeal fee required by 37 CFR 1.17(b)). No amendment *prima facie* placing the application in condition for allowance or Notice of Appeal (and appeal fee) was timely filed, and no extensions of time under the provisions of 37 CFR 1.136(a) were obtained. Accordingly, the above-identified application became abandoned on March 14, 2006.

Further correspondence with respect to this matter should be addressed as follows:

By mail: Mail Stop PETITIONS
Commissioner for Patents
Post Office Box 1450
Alexandria, VA 22313-1450

By hand: Customer Service Window
Randolph Building
401 Dulany Street
Alexandria, VA 22314

By facsimile: (571) 273-8300
ATTN: Office of Petitions

Telephone inquiries concerning this decision should be directed to the undersigned at (571) 272-3210.

Irvin Dingle
Petitions Examiner
Office of Petitions

Attachment: Advisory Action

Advisory Action Before the Filing of an Appeal Brief	Application No.	Applicant(s)	
	10/671,952	JAEGER, DENNY	
	Examiner	Art Unit	
	Jeffery A. Brier	2628	

--The MAILING DATE of this communication appears on the cover sheet with the correspondence address --

THE REPLY FILED 31 October 2006 FAILS TO PLACE THIS APPLICATION IN CONDITION FOR ALLOWANCE.

1. ☒ The reply was filed after a final rejection, but prior to or on the same day as filing a Notice of Appeal. To avoid abandonment of this application, applicant must timely file one of the following replies: (1) an amendment, affidavit, or other evidence, which places the application in condition for allowance; (2) a Notice of Appeal (with appeal fee) in compliance with 37 CFR 41.31; or (3) a Request for Continued Examination (RCE) in compliance with 37 CFR 1.114. The reply must be filed within one of the following time periods:
   a) ☐ The period for reply expires _____months from the mailing date of the final rejection.
   b) ☐ The period for reply expires on: (1) the mailing date of this Advisory Action, or (2) the date set forth in the final rejection, whichever is later. In no event, however, will the statutory period for reply expire later than SIX MONTHS from the mailing date of the final rejection.

   Examiner Note: If box 1 is checked, check either box (a) or (b). ONLY CHECK BOX (b) WHEN THE FIRST REPLY WAS FILED WITHIN TWO MONTHS OF THE FINAL REJECTION. See MPEP 706.07(f).

Extensions of time may be obtained under 37 CFR 1.136(a). The date on which the petition under 37 CFR 1.136(a) and the appropriate extension fee have been filed is the date for purposes of determining the period of extension and the corresponding amount of the fee. The appropriate extension fee under 37 CFR 1.17(a) is calculated from: (1) the expiration date of the shortened statutory period for reply originally set in the final Office action; or (2) as set forth in (b) above, if checked. Any reply received by the Office later than three months after the mailing date of the final rejection, even if timely filed, may reduce any earned patent term adjustment. See 37 CFR 1.704(b).

NOTICE OF APPEAL

2. ☐ The Notice of Appeal was filed on _____. A brief in compliance with 37 CFR 41.37 must be filed within two months of the date of filing the Notice of Appeal (37 CFR 41.37(a)), or any extension thereof (37 CFR 41.37(e)), to avoid dismissal of the appeal. Since a Notice of Appeal has been filed, any reply must be filed within the time period set forth in 37 CFR 41.37(a).

AMENDMENTS

3. ☒ The proposed amendment(s) filed after a final rejection, but prior to the date of filing a brief, will not be entered because
   (a) ☒ They raise new issues that would require further consideration and/or search (see NOTE below);
   (b) ☐ They raise the issue of new matter (see NOTE below);
   (c) ☐ They are not deemed to place the application in better form for appeal by materially reducing or simplifying the issues for appeal; and/or
   (d) ☐ They present additional claims without canceling a corresponding number of finally rejected claims.

   NOTE: *see page 2*. (See 37 CFR 1.116 and 41.33(a)).
4. ☐ The amendments are not in compliance with 37 CFR 1.121. See attached Notice of Non-Compliant Amendment (PTOL-324).
5. ☐ Applicant's reply has overcome the following rejection(s): _____.
6. ☐ Newly proposed or amended claim(s) _____ would be allowable if submitted in a separate, timely filed amendment canceling the non-allowable claim(s).
7. ☐ For purposes of appeal, the proposed amendment(s): a) ☐ will not be entered, or b) ☐ will be entered and an explanation of how the new or amended claims would be rejected is provided below or appended.
   The status of the claim(s) is (or will be) as follows:
   Claim(s) allowed: _____.
   Claim(s) objected to: _____.
   Claim(s) rejected: _____.
   Claim(s) withdrawn from consideration: _____.

AFFIDAVIT OR OTHER EVIDENCE

8. ☐ The affidavit or other evidence filed after a final action, but before or on the date of filing a Notice of Appeal will not be entered because applicant failed to provide a showing of good and sufficient reasons why the affidavit or other evidence is necessary and was not earlier presented. See 37 CFR 1.116(e).
9. ☐ The affidavit or other evidence filed after the date of filing a Notice of Appeal, but prior to the date of filing a brief, will not be entered because the affidavit or other evidence failed to overcome all rejections under appeal and/or appellant fails to provide a showing a good and sufficient reasons why it is necessary and was not earlier presented. See 37 CFR 41.33(d)(1).
10. ☐ The affidavit or other evidence is entered. An explanation of the status of the claims after entry is below or attached.

REQUEST FOR RECONSIDERATION/OTHER

11. ☐ The request for reconsideration has been considered but does NOT place the application in condition for allowance because: _____.
12. ☐ Note the attached Information Disclosure Statement(s). (PTO/SB/08) Paper No(s). _____
13. ☐ Other: _____.

Jeffery A Brier
Primary Examiner
Art Unit: 2628

Response to Amendment

1. The amendment filed on 10/31/2006 raises new issues because the changes made to claims 27 and 28 to overcome the 35 USC 112 first paragraph rejection requires ensuring the specification supports the newly added claim limitations. The newly added "input cursor" to claims 27 and 28 is not seen in the specification. The amendment also raises new issues because the changes made to claims 1 and 14 to overcome the 35 USC 112 second paragraph rejection requires ensuring the specification supports the newly added claim limitations and requires additional analysis under 35 USC 112 second paragraph. Claim 1 at lines 5-15 does not clearly claim if each graphic control device is associated with numeric settings or is associated with a single numeric setting. Claim 14 at lines 7-16 do not have the same amendments that were made to claim 1 at lines 5-8, thus, the amendment to claim 14 did not address the issue of elements in the broader selectively step and elements in the following narrower drawing step are not correctly interrelated in the claim as discussed in paragraph 7 of the Final Rejection.

2. Any inquiry concerning this communication or earlier communications from the examiner should be directed to Jeffery A Brier whose telephone number is (571) 272-7656. The examiner can normally be reached on M-F from 7:30 to 4:00. If attempts to reach the examiner by telephone are unsuccessful, the examiner's supervisor, Michael Razavi, can be reached at (571) 272-7664. The fax phone Number for the organization where this application or proceeding is assigned is 571-273-8300.

Information regarding the status of an application may be obtained from the Patent Application Information Retrieval (PAIR) system. Status information for published applications may be obtained from either Private PAIR or Public PAIR. Status information for unpublished applications is available through Private PAIR only. For more information about the PAIR system, see http://pair-direct.uspto.gov. Should you have questions on access to the Private PAIR system, contact the Electronic Business Center (EBC) at 866-217-9197 (toll-free).

Jeffery A. Brier
Primary Examiner
Division 2628

UNITED STATES PATENT AND TRADEMARK OFFICE

Commissioner for Patents
United States Patent and Trademark Office
P.O. Box 1450
Alexandria, VA 22313-1450
www.uspto.gov

HARRIS ZIMMERMAN
LAW OFFICES OF HARRIS ZIMMERMAN
1330 BROADWAY SUITE 710
OAKLAND, CA 94612-2506

MAILED

MAR 09 2010

OFFICE OF PETITIONS

In re Application of	:	
Denny Jaeger	:	
Application No. 10/671,952	:	ON PETITION
Filed: September 26, 2003	:	
Attorney Docket No. 4337	:	

This is a decision on the renewed petition under 37 CFR 1.137(b), filed May 4, 2007, to revive the above-identified application.

The petition is **GRANTED**.

The two-month period for filing an appeal brief in triplicate (accompanied by the fee required by 37 CFR 1.17(c)), runs from the date of this decision.

Telephone inquiries concerning this decision should be directed to Irvin Dingle at (571) 272-3210.

This matter is being forwarded to Technology Center AU 2628 for further processing.

Irvin Dingle
Petitions Examiner
Office of Petitions

UNITED STATES PATENT AND TRADEMARK OFFICE

Commissioner for Patents
United States Patent and Trademark Office
P.O. Box 1450
Alexandria, VA 22313-1450
www.uspto.gov

COPY MAILED
MAR 01 2010

HARRIS ZIMMERMAN
LAW OFFICES OF HARRIS ZIMMERMAN
SUITE 710, 1330 BROADWAY
OAKLAND, CA 94612-2506

In re Application of	:	
Denny JAEGER	:	
Application No. 10/671,953	:	ON PETITION
Filed: September 26, 2003	:	
Attorney Docket No. 4340	:	

This is a decision on the petition under the unintentional provisions of 37 CFR 1.137(b), filed December 7, 2009, to revive the above-identified application.

The petition is **GRANTED**.

The application became abandoned for failure to timely file a reply within the meaning of 37 CFR 1.113 to the final Office action of October 30, 2007. The proposed reply required for consideration of a petition to revive must be a Notice of Appeal (and appeal fee required by 37 CFR 41.20(b)(2), an amendment that *prima facie* places the application in condition for allowance, a Request for Continued Examination and submission (37 CFR 1.114), or the filing of a continuing application under 37 CFR 1.53(b). See MPEP 711.03(c)(II)(A)(2). No extensions of time pursuant to the provisions of 37 CFR 1.136(a) were obtained. Accordingly, the date of abandonment of this application is January 31, 2008.

The petition satisfies the requirements of 37 CFR 1.137(b) in that petitioner has supplied (1) the reply in the form of a Request for Continued Examination (RCE) and fee of $405, and the submission required by 37 CFR 1.114; (2) the petition fee of $810; and (3) a proper statement of unintentional delay.

There is no indication that the person signing the petition was ever given a power of attorney to prosecute the application. If the person signing the petition desires to receive future correspondence regarding this application, the appropriate power of attorney document must be submitted. While a courtesy copy of this decision is being mailed to the person signing the petition, all future correspondence will be directed to the address currently of record until appropriate instructions are received.

Telephone inquiries concerning this decision should be directed to the undersigned at (571) 272-6735.

This application is being referred to Technology Center AU 2176 for processing of the RCE and for appropriate action by the Examiner in the normal course of business on the amendment submitted in accordance with 37 CFR 1.114.

/Diane C. Goodwyn/
Diane C. Goodwyn
Petitions Examiner
Office of Petitions

cc: THOMAS H. HAM
WILSON & HAM
1811 SANTA RITA ROAD
SUITE 130
PLEASANTON, CA 94566

UNITED STATES PATENT AND TRADEMARK OFFICE

COMMISSIONER FOR PATENTS
UNITED STATES PATENT AND TRADEMARK OFFICE
P.O. BOX 1450
ALEXANDRIA, VA 22313-1450
WWW.USPTO.GOV

Paper No. None

COPY MAILED
JUN 14 2007
OFFICE OF PETITIONS

Law Offices of Royal W. Craig
Suite 153
10 N. Calvert Street
Baltimore MD 21202

In re Application of	:	
Mark S. Shaskey Sr.	:	
Application No. 10/671,974	:	DECISION ON PETITION
Filed: September 26, 2003	:	UNDER 37 C.F.R. § 1.137(A)
Attorney Docket No.: SHASKEY-	:	
PA-1	:	
Title: APPARATUS TO FACILITATE	:	
THE HOLDING OF LARGE BOTTLES	:	
WITHOUT INTEGRAL HANDLES	:	

This is a decision on the petition submitted on May 9, 2007 pursuant to 37 C.F.R. § 1.137(a)[1].

BACKGROUND

The above-identified application became abandoned for failure to submit an Appeal Brief within two-months of the filing of a

1 A grantable petition pursuant to 37 C.F.R. §1.137(a) must be accompanied by:

(1) The reply required to the outstanding Office action or notice, unless previously filed;
(2) The petition fee as set forth in 37 C.F.R. §1.17(l);
(3) A showing to the Commissioner that the entire delay in filing the required reply from the due date for the reply until the filing of a grantable petition was unavoidable;
(4) Any terminal disclaimer (and fee as set forth in 37 C.F.R. §1.20(d)) required pursuant to paragraph (d) of this section.

Notice of Appeal, filed on November 4, 2005. No extensions of time pursuant to 37 C.F.R. §1.136(a) were received. Accordingly, the above-identified application became abandoned on January 5, 2006. A Notice of Abandonment was mailed on July 13, 2006.

Petitioner has alleged that the applicant failed to receive correspondence from his attorney.

Petitioner has further asserted that an appeal brief was enclosed with this petition. The electronic file has been reviewed, and **an appeal brief has not been located.** As such, **it appears that Petitioner's assertion is inaccurate.**

THE RELEVANT STANDARD

The word 'unavoidable' ... is applicable to ordinary human affairs, and requires no more or greater care or diligence than is generally used and observed by prudent and careful men in relation to their most important business[2].

In addition, decisions are made on a "case-by-case basis, taking all the facts and circumstances into account." [3] Nonetheless, a petition cannot be granted where a petitioner has failed to meet his or her burden of establishing that the delay was "unavoidable."[4]

ANALYSIS

Petitioner has met requirements (1) and (2) of Rule § 1.137(a). The fourth requirement is not applicable.

Regarding the first requirement of Rule § 1.137(a), a Request for Continued Examination (RCE) has been included with this petition, along with an amendment. The associated fee has been charged to Petitioner's Deposit Account, along with the petition fee.

---

2 In re Mattullath, 38 App. D.C. 497, 514-15 (1912)(*quoting* Ex parte Pratt, 1887 Dec. Comm'r Pat. 31, 32-33 (1887)); see also Winkler v. Ladd, 221 F. Supp. 550, 552, 138 U.S.P.Q. 666, 167-68 (D.D.C. 1963), aff'd, 143 U.S.P.Q. 172 (D.C. Cir. 1963); Ex parte Henrich, 1913 Dec. Comm'r Pat. 139, 141 (1913).
3 Smith v. Mossinghoff, 671 F.2d at 538, 213 U.S.P.Q. at 982.
4 Haines v. Quigg, 5 USPQ2d 1130 (N.D. Ind. 1987), 673 F. Supp. at 316-17, 5 U.S.P.Q.2d at 1131-32.

The **failure to meet the third requirement of Rule § 1.137(a)** will be discussed below.

Petitioner has submitted a statement of facts from the inventor, who has set forth:

> My failure to authorize my patent attorney to file an appeal brief resulted entirely from not receiving said attorney's mail at my residence, and hence a breakdown of communications with my patent attorney (sic).
>
> ...
>
> A school bus stop is located in front of the mailbox at my residence. On many different occasions, I have personally seen children loiter at the bus stop, take mail out of my mail box (sic), and tear open my mail. I have repeatedly asked the children to cease tampering with my mail but my requests have gone unanswered. I still do not receive my bills or other mail regularly.
>
> ...
>
> Since I did not receive my patent attorney's letter dated 30 November 2005 regarding the need to file an Appeal Brief, nor the Notice of Abandonment (a copy of which was mailed 20 July 2006) (sic).
>
> ...
>
> In December 2006, I called my patent attorney and was informed of the abandonment. Immediately upon realization of the situation I authorized my attorney to prepare and file a Petition to Revive under 37 C.F.R. 1.137(a) (unavoidable delay) along with all supporting documents and fees.

The inventor has thus asserted that his attorney sent him a letter regarding the need to file an Appeal Brief, but this letter was not received. Consequently, the inventor never provided his attorney with the authorization to file an Appeal Brief. The inventor has suggested that the mailing was removed from his mailbox by neighborhood schoolchildren while waiting for the school bus.

Petitioner's arguments have been considered, and they have not been deemed to be persuasive.

First, the inventor has blamed the entire period of delay on the failure to receive a copy of a letter from his attorney, however it does not appear that a copy of this letter has been included with this petition.

Secondly, the inventor has suggested that his authorization was required before the attorney could file an appeal brief on his behalf. It does not appear that any documentation has been provided which would establish that the inventor's authorization was required before his counsel could file a paper on his behalf.

Third, it appears that Petitioner is attempting to meet the requirements of Delgar v. Schulyer, as delineated in MPEP § 711.03(c)(I)(A). However, the Delgar requirements are not relevant to the pertinent case, in that the communication in question was mailed to the inventor not by the Office, but rather by his attorney. In Delgar, the Office mailed a notice of allowance to the applicant, and the Delgar showing provides a mechanism by which applicants can establish that a mailing was not received from the Office. Petitioner is attempting to establish that a mailing was not received from counsel, a situation that is outside of the scope of Delgar.

Fourth, it does not appear that the inventor acted as a reasonably prudent and careful man, in relation to his most important business. Petitioner retained an attorney to file a patent application on his behalf. As such, he either knew or should have known to expect written correspondence from this attorney. Meanwhile, the inventor had actual knowledge of the fact that children tended to tamper with his mail, to such the degree that he does not regularly receive his mail.

A similarly situated reasonably prudent and careful man, acting in relation to his most important business, who was aware that children were removing his mail from his mail box and opening the same, would take affirmative steps to prevent this situation from occurring in the future. However, it does not appear that the inventor saw fit to rectify this situation via:

1. Obtaining a locking mailbox, or;
2. obtaining a Post Office box, or;
3. promptly retrieving his mail subsequent to the deposit of said mail by the mail delivery person but prior to the arrival of the children[5], or;
4. contacting the local Postmaster about this situation, or;
5. contacting the local school board, or;
6. contacting the parents of these children.

---

5 It is noted that the inventor has set forth that he has personally seen the children remove mail from his mail box "on many different occasions," so it is clear that he is often present at the time of the trespass.

Fifth, the language of Rule § 1.137(a) makes it clear that it is the entire period of delay which must be shown to have been unavoidable. *Assuming arguendo* that Petitioner could establish that the inventor was powerless to prevent the continued theft of his mail, there remains two periods of delay that have not been addressed by the present petition.

There are three periods to be considered during the evaluation of a petition under Rule § 1.137(a):

(1) the delay in reply that originally resulted in the abandonment;
(2) the delay in filing an initial petition pursuant to Rule § 1.137(a) to revive the application; and
(3) the delay in filing a grantable petition pursuant to Rule § 1.137(a) to revive the application.

Presuming that it was reasonable for the inventor to continue to allow the ongoing theft of his mail, the second and third periods of delay remain unaddressed.

Regarding the second period, it is noted that the inventor has asserted that in December of 2006, he called his attorney and was informed of the abandonment, and he "immediately" provided authorization for the attorney to file a petition pursuant to Rule § 1.137(a) on his behalf. However, another five months were allowed to pass before the filing of the present petition. Hence, it does not appear that Petitioner is in a position to establish that the entire period of delay was unavoidable.

Regarding the third period, it is noted that Petitioner is a registered practitioner. As a registered member of the patent bar, petitioner is expected to know the relevant laws, regulations, and fees pertaining to his practice and under which this Office operates, and he is charged with the responsibility of keeping himself up to date with any changes in these matters. Yet the second period of delay set forth above was not addressed in this petition.

Consequently, the petition pursuant to 37 C.F.R. § 1.137(a) must be **DISMISSED**.

CONCLUSION

Any reply must be submitted within **TWO MONTHS** from the mail date of this decision. Extensions of time under 37 C.F.R. §1.136(a) are permitted. The reply should include a cover letter entitled "Renewed Petition Pursuant to 37 C.F.R. 1.137(a) and/or

1.181(a)". This is not a final agency action within the meaning of 5 U.S.C 704.

Alternatively, Petitioner may also submit a petition pursuant to 37 C.F.R. § 1.137(b).

Any subsequent filing pertaining to the abandonment of this application should indicate in a prominent manner that the attorney handling this matter is Paul Shanoski, and may be submitted by mail[6], hand-delivery[7], or facsimile[8].

If responding by mail, Petitioner is advised not to place the undersigned's name on the envelope. Only the information that appears in the footnote should be included - adding anything else to the address will delay the delivery of the response to the undersigned.

It is noted that the address listed on the petition differs from the address of record. The application file does not indicate a change of correspondence address has been filed in this case, although the address given on the petition differs from the address of record. If Petitioner desires to receive future correspondence regarding this application, the change of correspondence address must be submitted.

A courtesy copy of this decision will be mailed to Petitioner. However, all future correspondence will be directed to the address of record until such time as appropriate instructions are received to the contrary. Petitioner will not receive future correspondence related to this application unless Change of Correspondence Address, Patent Form (PTO/SB/122) is submitted for the above-identified application.

For Petitioner's convenience, a blank Change of Correspondence Address, Patent Form (PTO/SB/122), may be found at http://www.uspto.gov/web/forms/sb0122.pdf.

Telephone inquiries regarding *this decision* should be directed to the undersigned at (571) 272-3225[9]. All other inquiries

---

6 Mail Stop Petition, Commissioner for Patents, United States Patent and Trademark Office, P.O. Box 1450, Alexandria, VA, 22313-1450.
7 Customer Window, Randolph Building, 401 Dulaney Street, Alexandria, VA, 22314.
8 (571) 273-8300- please note this is a central facsimile number.
9 Petitioner will note that all practice before the Office should be in writing, and the action of the Office will be based exclusively on the written record in the Office. See 37 C.F.R. §1.2. As such, Petitioner is

concerning examination procedures or status of the application should be directed to the Technology Center.

Paul Shanoski
Senior Attorney
Office of Petitions
United States Patent and Trademark Office

cc: Royal W. Craig
Ober|Kaler
Suite 153
120 East Baltimore Street
Baltimore, MD 21202

---

reminded that no telephone discussion may be controlling or considered authority for any further action(s) of Petitioner.

UNITED STATES PATENT AND TRADEMARK OFFICE

COMMISSIONER FOR PATENTS
UNITED STATES PATENT AND TRADEMARK OFFICE
P.O. BOX 1450
ALEXANDRIA, VA 22313-1450
WWW.USPTO.GOV

Paper No. None

Law Offices of Royal W. Craig
Suite 153
10 N. Calvert Street
Baltimore MD 21202

COPY MAILED
OCT 29 2007
OFFICE OF PETITIONS

In re Application of Mark S. Shaskey Sr. Application No. 10/671,974 Filed: September 26, 2003 Attorney Docket No.: SHASKEY-PA-1 Title: APPARATUS TO FACILITATE THE HOLDING OF LARGE BOTTLES WITHOUT INTEGRAL HANDLES	DECISION ON PETITION PURSUANT TO 37 C.F.R. § 1.137(B)

This is a decision on the petition filed July 24, 2007, pursuant to 37 C.F.R. § 1.137(b)[1], to revive the above-identified application.

---

1 A grantable petition pursuant to 37 C.F.R § 1.137(b) must be accompanied by:

(1) The reply required to the outstanding Office action or notice, unless previously filed;
(2) The petition fee as set forth in § 1.17(m);
(3) A statement that the entire delay in filing the required reply from the due date for the reply until the filing of a grantable petition pursuant to this paragraph was unintentional. The Commissioner may require additional information where there is a question whether the delay was unintentional, and;
(4) Any terminal disclaimer (and fee as set forth in § 1.20(d)) required pursuant to paragraph (d) of this section.

BACKGROUND AND PROCEDURAL HISTORY

The above-identified application became abandoned for failure to submit an Appeal Brief within two-months of the filing of a Notice of Appeal, filed on November 4, 2005. No extensions of time pursuant to 37 C.F.R. §1.136(a) were received. Accordingly, the above-identified application became abandoned on January 5, 2006. A Notice of Abandonment was mailed on July 13, 2006.

A petition pursuant to 37 C.F.R. § 1.137(a) was submitted on May 9, 2007, and was dismissed via the mailing of a decision on June 14, 2007.

ANALYSIS

With the present petition, Petitioner has submitted the petition fee and the proper statement of unintentional delay. No terminal disclaimer is required.

Petitioner has further included a Request for Continued Examination (RCE) under 37 C.F.R. § 1.114, including a request for consideration of a concurrently submitted amendment and payment of the RCE fee. The RCE has been accepted as the required reply under 37 C.F.R. § 1.137(b)(1). Having made a statement that is being construed as the proper statement of unintentional delay and having submitted the petition fee, petitioner has met all other requirements for a grantable petition under 37 C.F.R. § 1.137(b).

It follows that this petition is **GRANTED**.

CONCLUSION

The application file is being forwarded to Technology Center 3652 for consideration of the submission under 37 C.F.R. § 1.114, the amendment filed on July 24, 2007.

It is noted that the address listed on the petition differs from the address of record. The application file does not indicate a change of correspondence address has been filed in this case, although the address given on the petition differs from the address of record. If Petitioner desires to receive future correspondence regarding this application, the change of correspondence address must be submitted.

A courtesy copy of this decision will be mailed to Petitioner. However, all future correspondence will be directed to the address of record until such time as appropriate instructions are received to the contrary. Petitioner will not receive future correspondence related to this application unless Change of Correspondence Address, Patent Form (PTO/SB/122) is submitted for the above-identified application.

For Petitioner's convenience, a blank Change of Correspondence Address, Patent Form (PTO/SB/122), may be found at http://www.uspto.gov/web/forms/sb0122.pdf.

Telephone inquiries regarding *this decision* should be directed to the undersigned at (571) 272-3225[2]. All other inquiries concerning examination procedures or status of the application should be directed to the Technology Center.

Paul Shanoski
Senior Attorney
Office of Petitions
United States Patent and Trademark Office

cc: Royal W. Craig
Ober|Kaler
Suite 153
120 East Baltimore Street
Baltimore, MD 21202

2 Petitioner will note that all practice before the Office should be in writing, and the action of the Office will be based exclusively on the written record in the Office. See 37 C.F.R. § 1.2. As such, Petitioner is reminded that no telephone discussion may be controlling or considered authority for any further action(s) of Petitioner.

IFW

UNITED STATES PATENT AND TRADEMARK OFFICE

COMMISSIONER FOR PATENTS
UNITED STATES PATENT AND TRADEMARK OFFICE
P.O. BOX 1450
ALEXANDRIA, VA 22313-1450
WWW.USPTO.GOV

Paper No. None

OBER/KALER
c/o Royal W. Craig
120 E. Baltimore Street
Suite 800
Baltimore, MD 21202-1643

COPY MAILED
OCT 29 2007
OFFICE OF PETITIONS

In re Application of Mark S. Shaskey Sr. Application No. 10/671,974 Filed: September 26, 2003 Attorney Docket No.: SHASKEY-PA-1 Title: APPARATUS TO FACILITATE THE HOLDING OF LARGE BOTTLES WITHOUT INTEGRAL HANDLES	DECISION ON PETITION PURSUANT TO 37 C.F.R. § 1.137(B)

This is a decision on the petition filed July 24, 2007, pursuant to 37 C.F.R. § 1.137(b)[1], to revive the above-identified application.

1 A grantable petition pursuant to 37 C.F.R § 1.137(b) must be accompanied by:

(1) The reply required to the outstanding Office action or notice, unless previously filed;
(2) The petition fee as set forth in § 1.17(m);
(3) A statement that the entire delay in filing the required reply from the due date for the reply until the filing of a grantable petition pursuant to this paragraph was unintentional. The Commissioner may require additional information where there is a question whether the delay was unintentional, and;
(4) Any terminal disclaimer (and fee as set forth in § 1.20(d)) required pursuant to paragraph (d) of this section.

BACKGROUND AND PROCEDURAL HISTORY

The above-identified application became abandoned for failure to submit an Appeal Brief within two-months of the filing of a Notice of Appeal, filed on November 4, 2005. No extensions of time pursuant to 37 C.F.R. §1.136(a) were received. Accordingly, the above-identified application became abandoned on January 5, 2006. A Notice of Abandonment was mailed on July 13, 2006.

A petition pursuant to 37 C.F.R. § 1.137(a) was submitted on May 9, 2007, and was dismissed via the mailing of a decision on June 14, 2007.

ANALYSIS

With the present petition, Petitioner has submitted the petition fee and the proper statement of unintentional delay. No terminal disclaimer is required.

Petitioner has further included a Request for Continued Examination (RCE) under 37 C.F.R. § 1.114, including a request for consideration of a concurrently submitted amendment and payment of the RCE fee. The RCE has been accepted as the required reply under 37 C.F.R. § 1.137(b)(1). Having made a statement that is being construed as the proper statement of unintentional delay and having submitted the petition fee, petitioner has met all other requirements for a grantable petition under 37 C.F.R. § 1.137(b).

It follows that this petition is **GRANTED**.

CONCLUSION

The application file is being forwarded to Technology Center 3652 for consideration of the submission under 37 C.F.R. § 1.114, the amendment filed on July 24, 2007.

It is noted that the address listed on the petition differs from the address of record. The application file does not indicate a change of correspondence address has been filed in this case, although the address given on the petition differs from the address of record. If Petitioner desires to receive future correspondence regarding this application, the change of correspondence address must be submitted.

A courtesy copy of this decision will be mailed to Petitioner. However, all future correspondence will be directed to the address of record until such time as appropriate instructions are received to the contrary. Petitioner will not receive future correspondence related to this application unless Change of Correspondence Address, Patent Form (PTO/SB/122) is submitted for the above-identified application.

For Petitioner's convenience, a blank Change of Correspondence Address, Patent Form (PTO/SB/122), may be found at http://www.uspto.gov/web/forms/sb0122.pdf.

Telephone inquiries regarding *this decision* should be directed to the undersigned at (571) 272-3225[2]. All other inquiries concerning examination procedures or status of the application should be directed to the Technology Center.

Paul Shanoski
Senior Attorney
Office of Petitions
United States Patent and Trademark Office

cc: Royal W. Craig
Ober|Kaler
Suite 153
120 East Baltimore Street
Baltimore, MD 21202

---

2 Petitioner will note that all practice before the Office should be in writing, and the action of the Office will be based exclusively on the written record in the Office. See 37 C.F.R. § 1.2. As such, Petitioner is reminded that no telephone discussion may be controlling or considered authority for any further action(s) of Petitioner.

UNITED STATES PATENT AND TRADEMARK OFFICE

Commissioner for Patents
United States Patent and Trademark Office
P.O. Box 1450
Alexandria, VA 22313-1450
www.uspto.gov

COPY MAILED

AUG 01 2006

OFFICE OF PETITIONS

FOLEY & LARDNER
2029 CENTURY PARK EAST
SUITE 3500
LOS ANGELES CA 90067

In re Application of	:	
Rajiv Shah et al	:	
Application No. 10/671,996	:	ON PETITION
Filed: September 26, 2003	:	
Attorney Docket No. 047711-0319	:	

This is a decision on the petition, filed July 24, 2006, under 37 CFR 1.313(c)(2) to withdraw the above-identified application from issue after payment of the issue fee.

The petition is **GRANTED**.

The above-identified application is withdrawn from issue for consideration of a submission under 37 CFR 1.114 (request for continued examination). See 37 CFR 1.313(c)(2).

Petitioner is advised that the issue fee paid on July 11, 2006, in the above-identified application cannot be refunded. If, however, the above-identified application is again allowed, petitioner may request that it be applied towards the issue fee required by the new Notice of Allowance.[1]

Telephone inquiries should be directed to the undersigned at (571) 272-3208.

The examiner of Technology Center AU 2814 will consider the request for continued examination under 37 CFR 1.114.

Karen Creasy

Karen Creasy
Petitions Examiner
Office of Petitions

---

[1] The request to apply the issue fee to the new Notice may be satisfied by completing and returning the new Issue Fee Transmittal Form PTOL-85(b), which includes the following language thereon: "Commissioner for Patents is requested to apply the Issue Fee and Publication Fee (if any) or re-apply any previously paid issue fee to the application identified above." Petitioner is advised that, whether a fee is indicated as being due or not, the Issue Fee Transmittal Form **must** be completed and timely submitted to avoid abandonment. Note the language in bold text on the first page of the Notice of Allowance and Fee(s) Due (PTOL-85).

UNITED STATES PATENT AND TRADEMARK OFFICE

COMMISSIONER FOR PATENTS
UNITED STATES PATENT AND TRADEMARK OFFICE
P.O. BOX 1450
ALEXANDRIA, VA 22313-1450
www.uspto.gov

BRIAN R. RAYVE
161 MAPLE DRIVE
PARK CITY UT 84098

COPY MAILED

JAN 22 2007

OFFICE OF PETITIONS

In re Application of :
Peterson, et al. : DECISION ON PETITION
Application No. 10/672,003 :
Filed: September 25, 2003 :
Docket No.: 009-1-001 :

This is a decision on the petition under 37 C.F.R. § 1.137(b), filed January 3, 2007, to revive the above-identified application.

The petition is **GRANTED**.

This application became abandoned for failure to timely reply to the non-final Office action mailed March 22, 2005. The Notice set a three (3) month shortened statutory period of time for reply. No extensions of time in accordance with 37 C.F.R. § 1.136 were timely requested. Notice of Abandonment was mailed November 23, 2005.

A grantable petition pursuant to 37 C.F.R. § 1.137(b) must be accompanied by: (1) the required reply to the outstanding Office action or notice, unless previously filed; (2) the petition fee as set forth in 37 C.F.R. § 1.17(m); (3) a statement that the entire delay in filing the required reply from the due date for the reply until the filing of a grantable petition pursuant to 37 C.F.R. § 1.137(b) was unintentional; and (4) any terminal disclaimer (and fee set forth in 37 C.F.R. § 1.20(d)) required pursuant to 37 C.F.R. § 1.137(c).

The above-identified application has been abandoned for an extended period of time. The Patent and Trademark Office is relying on petitioner's duty of candor and good faith in accepting the statement that the entire delay in filing the required reply from the due date for the reply until the filing of a grantable petition pursuant to 37 CFR 1.137(b) was unintentional. See, Changes to Patent Practice and Procedure, 62 Fed. Reg. at 53160 and 53178; 1203 Off. Gaz. Pat. Office at 88 and 103 (responses to comments 64 and 109)(applicant obligated under 37 CFR 10.18 to inquire into the underlying facts and

circumstances when providing the statement required by 37 CFR 1.137(b) to the Patent and Trademark Office).

The instant petition has been reviewed and found in compliance with the provisions of 37 C.F.R. § 1.137(b). Accordingly, the failure to timely submit a proper reply to the non-final Office action is accepted as having been unintentionally delayed.

This application is being forwarded to Technology Center 3600 for further processing.

Telephone inquiries concerning this matter may be directed to the undersigned at (571) 272-3205.

Alesia M. Brown
Petitions Attorney
Office of Petitions

UNITED STATES PATENT AND TRADEMARK OFFICE

Commissioner for Patents
United States Patent and Trademark Office
P.O. Box 1450
Alexandria, VA 22313-1450
www.uspto.gov

LAW OFFICES OF MARK A. HAMILL, P.C.
45 SOUTH PARK BLVD.
SUITE 205
GLEN ELLYN, IL 60137

COPY MAILED

JUN 16 2009

OFFICE OF PETITIONS

In re Application of Peterson :
Application No. 10/672,003 :
Filing Date: September 25, 2003 :
Attorney Docket No. PET-101 :

Decision on Petition

This is a decision on the petition under 37 CFR 1.137(b), filed April 14, 2009, to revive the above-identified application.

The petition is **DISMISSED**.

Any request for reconsideration must be submitted within TWO (2) MONTHS from the mail date of this decision. No further petition fee is required for the request. Extensions of time under 37 CFR 1.136(a) are permitted. The reconsideration request should include a cover letter entitled "Renewed Petition under 37 CFR 1.137(b)."

Facts

The Office mailed a Notice of Allowance on March 19, 2007. The Notice of Allowance required payment of $700 for the issue fee and $300 for the publication fee. The Notice set a statutory period for reply of three (3) months.

An issue fee transmittal sheet and check for $1,000 were filed June 25, 2007 (Certificate of Mailing date of June 19, 2009). The $1,000 check was returned by unpaid by the bank. As a result, the application became abandoned as a matter of law on June 20, 2007.

A Notice of Abandonment was mailed July 27, 2007.

Decision

A grantable petition under 37 CFR 1.137(b) must be accompanied by:

(1) The reply required to the outstanding Office action or notice, unless previously filed,
(2) The petition fee,
(3) A statement that the entire delay in filing the required reply from the due date for the reply until the filing of a grantable petition pursuant to 37 CFR 1.137(b) was unintentional, and

(4) A terminal disclaimer and fee if the application was filed on or before June 8, 1995 or if the application is a design application.

The petition fails to satisfy item (1) above.

The amount due for a fee is based on the date the fee is paid in full. As of April 14, 2009, the fee required for the issue fee for a utility application was $755 and the amount due for the publication fee was $300. Therefore, petitioner owed a total of $1,055 for the fees.

The required petition fee is $810.

The processing fee required when a check has been returned unpaid by a bank is $50.

The total of the fees above is $1,915 ($755 + $300 + $810 +$50). However, the petition was accompanied by payment of $1,815.

Petitioner may wish to file a request for reconsideration with payment of $100.

A grantable petition under 37 CFR 1.137(b) must be accompanied by a statement that the entire delay in filing the required reply from the due date for the reply until the filing of a grantable petition pursuant to 37 CFR 1.137(b) was unintentional. Although the instant petition includes such a statement, the statement should also appear in any request for reconsideration. In other words, any request for reconsideration should include the following statement, or a similar statement: "The entire delay in filing the required reply from the due date for the reply until the filing the instant petition pursuant to 37 CFR 1.137(b) was unintentional."

Unless filed by EFS Web, further correspondence with respect to this matter should be addressed as follows:

By mail: Mail Stop Petition
Commissioner for Patents
P.O. Box 1450
Alexandria, VA 22313-1450

By facsimile: (571) 273-8300
Attn: Office of Petitions

Telephone inquiries regarding this communication should be directed to Petitions Attorney Steven Brantley at (571) 272-3203.

Charles Steven Brantley
Senior Petitions Attorney
Office of Petitions

UNITED STATES PATENT AND TRADEMARK OFFICE

Commissioner for Patents
United States Patent and Trademark Office
P.O. Box 1450
Alexandria, VA 22313-1450
www.uspto.gov

LAW OFFICES OF MARK A. HAMILL, P.C.
45 SOUTH PARK BLVD.
SUITE 205
GLEN ELLYN, IL 60137

COPY MAILED

SEP 17 2009

OFFICE OF PETITIONS

In re Application of Peterson :
Application No. 10/672,003 : Decision on Petition
Filing Date: September 25, 2003 :
Attorney Docket No. PET-101 :

This is a decision on the renewed petition under 37 CFR 1.137(b), filed August 14, 2009, to revive the above-identified application.

The petition is **granted**.

Facts

The Office mailed a Notice of Allowance on March 19, 2007. The Notice of Allowance required payment of $700 for the issue fee and $300 for the publication fee. The Notice set a statutory period for reply of three (3) months.

An issue fee transmittal sheet and check for $1,000 were filed June 25, 2007 (Certificate of Mailing date of June 19, 2009). The $1,000 check was returned by unpaid by the bank. As a result, the application became abandoned as a matter of law on June 20, 2007.

A Notice of Abandonment was mailed July 27, 2007.

Decision

A grantable petition under 37 CFR 1.137(b) must be accompanied by:

(1) The reply required to the outstanding Office action or notice, unless previously filed,
(2) The petition fee,
(3) A statement that the entire delay in filing the required reply from the due date for the reply until the filing of a grantable petition pursuant to 37 CFR 1.137(b) was unintentional, and
(4) A terminal disclaimer and fee if the application was filed on or before June 8, 1995 or if the application is a design application.

As to item (1), petitioner has supplied the issue fee of $755, the publication fee of $300, and $50 for the fee required as a result of the check returned unpaid by the bank.

As to item (2), petitioner has submitted the petition fee of $810.

As to item (3), petitioner has stated the entire delay in filing the required reply from the due date for the reply until the filing of a grantable petition pursuant to 37 CFR 1.137(b) was unintentional.

As to item (4), a terminal disclaimer is unnecessary because the instant application is a nonprovisional application filed after June 8, 1995.

Petitioner has met the requirements to revive the above-identified application pursuant to 37 CFR 1.137(b). Therefore, the petition is granted and the application is revived.

The Office of Data Management, Patent Publication Branch, will be informed of the instant decision and the application will be issued as a patent in due course.

Telephone inquiries regarding this communication should be directed to Petitions Attorney Steven Brantley at (571) 272-3203.

Charles Steven Brantley
Senior Petitions Attorney
Office of Petitions

faUNITED STATES PATENT AND TRADEMARK OFFICE

COMMISSIONER FOR PATENTS
UNITED STATES PATENT AND TRADEMARK OFFICE
P.O. BOX 1450
ALEXANDRIA, VA 22313-1450
WWW.USPTO.GOV

Paper No.

TOWNSEND AND TOWNSEND AND CREW, LLP
TWO EMBARCADERO CENTER
EIGHTH FLOOR
SAN FRANCISCO CA 94111-3834

COPY MAILED

FEB 29 2008

OFFICE OF PETITIONS

In re Application of :
Hisae Shibuya et al. :
Application No. 10/672,010 : DECISION ON PETITION
Filed: September 25, 2003 : PURSUANT TO
Attorney Docket No.: 16869S- : 37 C.F.R. § 1.137(B)
095400US :
Title: METHOD AND APPARATUS FOR :
ANALYZING DEFECT DATA AND A :
REVIEW SYSTEM

This is a decision on the petition pursuant to 37 C.F.R. § 1.137(b)[1], filed October 24, 2007, to revive the above-identified application.

The petition is **GRANTED**.

The above-identified application became abandoned for failure to reply in a timely manner to the non-final Office action, mailed

1 A grantable petition pursuant to 37 C.F.R § 1.137(b) must be accompanied by:

(1) The reply required to the outstanding Office action or notice, unless previously filed;
(2) The petition fee as set forth in § 1.17(m);
(3) A statement that the entire delay in filing the required reply from the due date for the reply until the filing of a grantable petition pursuant to this paragraph was unintentional. The Commissioner may require additional information where there is a question whether the delay was unintentional, and;
(4) Any terminal disclaimer (and fee as set forth in § 1.20(d)) required pursuant to paragraph (d) of this section.

March 6, 2007, which set a shortened statutory period for reply of three months. No response was received, and no extensions of time under the provisions of 37 C.F.R. § 1.136(a) were requested. Accordingly, the above-identified application became abandoned on June 7, 2007. A notice of abandonment was mailed on October 2, 2007.

With this petition, Petitioner has submitted the petition fee, an amendment, and the proper statement of unintentional delay. A terminal disclaimer is not required.

Petitioner has further indicated that the response was originally submitted on July 6, 2007 along with a one-month extension of time, however the documents were submitted containing application number 10/672,101 as an identifier. As such, the amendment was associated with application number 10/672,101.

The submission of July 6, 2007 will be removed from the electronic file associated with application number 10/672,101, and placed into the electronic file associated with the present application in due course. Similarly, the one-month extension of time fee that was submitted on July 6, 2007 will be associated with the electronic records that pertain to this application in due course.

The Technology Center will be notified of this decision. The Technology Center's support staff will notify the Examiner of this decision, so that the amendment that was submitted on July 6, 2007 can be processed.

Telephone inquiries regarding *this decision* should be directed to the undersigned at (571) 272-3225[2]. All other inquiries concerning the status of the application should be directed to the Technology Center

/Paul Shanoski/
Paul Shanoski
Senior Attorney
Office of Petitions

---

2 Petitioner will note that all practice before the Office should be in writing, and the action of the Office will be based exclusively on the written record in the Office. See 37 C.F.R. § 1.2. As such, Petitioner is reminded that no telephone discussion may be controlling or considered authority for any further action(s) of Petitioner.

UNITED STATES PATENT AND TRADEMARK OFFICE

Technology Center 1700

Mailed: 2-14-06

rvk
Paper Number: ____

In re application of
Suzanne K. Melges
Serial No. 10/672,016
Filed: September 25, 2003
For: FOOD LABELING DEVICE FOR PRINTING TIME AND DATE INFORMATION ON ADHESIVE LABELS TO TRACK FRESHNESS

DECISION ON PETITION

This is a response to the PETITION TO WITHDRAW HOLDING OF ABANDONMENT BASED ON FAILURE TO RECEIVE OFFICE ACTION, filed June 09, 2005. The petition requests that the abandonment, as set forth in the Notice of Abandonment of April 04, 2005, for failure to timely file a proper response to the Office letter dated September 02, 2004 be withdrawn. The petitioner asserts that the Office letter of September 02, 2004 was mailed to an old address in the record and not received by applicant.

DECISION

The instant request is accepted as a timely petition under 37 C.F.R. 1.181 (no fee).

A review of the instant application file indicates that the Office letter of September 02, 2004 was mailed to the old correspondence address of the petitioner in the record, which is :

LAW OFFICE OF BRIAN R. RAYVE
P.O.BOX 11586
SALT LAKE CITY, UT 84147-0586

The USPTO has not received a mailing address change request from the applicant with a new address of :

UNITED STATES PATENT AND TRADEMARK OFFICE

Technology Center 1700

LAW OFFICE OF BRIAN R.RAYVE
161 MAPLE DRIVE
PARK CITY, UT 84098

Since it is applicant's responsibility to promptly inform the Office of any change of correspondence address (see MPEP 601.03), and the applicant did not file a notification of mailing address change to the USPTO before the mailing date of the Office letter of September 02, 2004, therefore, this application is properly abandoned and the request cannot be granted.

Therefore, this application stands abandoned.

The applicant may file a new petition to the Deputy Commissioner for Patent Examination Policy under 37 CFR 1.137(b) to revive the instant abandoned application based unintentional delay.

The instant petition was accompanied by $130.00 as a petition fee. However, a petition of this type does not require a $130.00 petition fee. Therefore, a refund of the $130.00 may be obtained by directing a copy of this decision along with a written request for such a refund to the Office of Finance.

The Petition is **DENIED**.

Jacqueline M. Stone

Jacqueline Stone, Director
Technology Center 1700
Chemical and Materials Engineering

LAW OFFICE OF BRIAN R. RAYVE
161 MAPLE DRIVE
PARK CITY, UT 84098

UNITED STATES PATENT AND TRADEMARK OFFICE

COMMISSIONER FOR PATENTS
UNITED STATES PATENT AND TRADEMARK OFFICE
P.O. BOX 1450
ALEXANDRIA, VA 22313-1450
WWW.USPTO.GOV

Paper No. None

Baniak Pine & Gannon
150 N. Wacker Drive
Suite 1200
Chicago IL 60606

COPY MAILED
DEC 14 2006
OFFICE OF PETITIONS

In re Application of :
Suzanne K. Melges :
Application No. 10/672,016 : DECISION ON PETITION
Filed: September 25, 2003 : UNDER 37 C.F.R. §1.137(B)
Attorney Docket Number: 4330/3 :
US :
Title: FOOD LABELING DEVICE FOR :
PRINTING TIME AND DATE :
INFORMATION ON ADHESIVE LABELS :
TO TRACK FRESHNESS ;

This is a decision on the petition filed on August 4, 2006, pursuant to 37 C.F.R. §1.137(b)[1], to revive the above-identified application.

The above-identified application became abandoned for failure to reply in a timely manner to the non-final Office action, mailed September 2, 2004, which set a shortened statutory period for reply of three months. No response was received, and no extensions of time under the provisions of 37 C.F.R. §1.136(a) were requested. Accordingly, the above-identified application became abandoned on December 3, 2004. A notice of abandonment was mailed on April 4, 2005.

---

1 A grantable petition pursuant to 37 C.F.R. 1.137(b) must be accompanied by:
(1) The reply required to the outstanding Office action or notice, unless previously filed;
(2) The petition fee as set forth in § 1.17(m);
(3) A statement that the entire delay in filing the required reply from the due date for the reply until the filing of a grantable petition pursuant to this paragraph was unintentional. The Commissioner may require additional information where there is a question whether the delay was unintentional, and;
(4) Any terminal disclaimer (and fee as set forth in § 1.20(d)) required pursuant to paragraph (d) of this section.

With the present petition, Petitioner has submitted the petition fee, an amendment, and the proper statement of unintentional delay. A terminal disclaimer is not required.

As such, the petition is **GRANTED**.

The Technology Center will be notified of this decision. The Technology Center's support staff will notify the Examiner of this decision, so that the amendment, which was received with the present petition, can be processed.

The Revocation of Power of Attorney and Change of Correspondence Address have been entered and made of record.

Telephone inquiries regarding *this decision* should be directed to the undersigned at (571) 272-3225[2]. All other inquiries concerning examination procedures or status of the application should be directed to the Technology Center.

Paul Shanoski
Senior Attorney
Office of Petitions
United States Patent and Trademark Office

---

2 Petitioner will note that all practice before the Office should be in writing, and the action of the Office will be based exclusively on the written record in the Office. See 37 C.F.R. §1.2. As such, Petitioner is reminded that no telephone discussion may be controlling or considered authority for Petitioner's further action(s).

UNITED STATES PATENT AND TRADEMARK OFFICE

Commissioner for Patents
United States Patent and Trademark Office
P.O. Box 1450
Alexandria, VA 22313-1450
www.uspto.gov
DIW Oct-06

MARTINE PENILLA & GENCARELLA, LLP
710 LAKEWAY DRIVE
SUITE 200
SUNNYVALE CA 94085

COPY MAILED
OCT 27 2006
OFFICE OF PETITIONS

In re Application of	:	
Gotkis et al.	:	
Application No. 10/672,019	:	DECISION ON PETITION
Filed: 26 September, 2003	:	
Atty Docket No. LAM2P437	:	

This is a decision on the petition filed on 24 July, 2006, under 37 CFR 1.137(b),[1] to revive the above-identified application.

The petition is **GRANTED**.

The application became abandoned on 5 January, 2006, for failure to timely file a proper response to the final Office action mailed on 5 July, 2005, which set a three (3) month shortened statutory period for reply. A Request for Reconsideration was

---

[1] Effective December 1, 1997, the provisions of 37 CFR 1.137(b) now provide that where the delay in reply was unintentional, a petition may be filed to revive an abandoned application or a lapsed patent pursuant to 37 CFR 1.137(b). A grantable petition filed under the provisions of 37 CFR 1.137(b) must be accompanied by:

(1) the required reply, unless previously filed. In a nonprovisional application abandoned for failure to prosecute, the required reply may be met by the filing of a continuing application. In a nonprovisional utility or plant application filed on or after June 8, 1995, and abandoned for failure to prosecute, the required reply may also be met by the filing of a request for continuing examination in compliance with § 1.114. In an application or patent, abandoned or lapsed for failure to pay the issue fee or any portion thereof, the required reply must be the payment of the issue fee or any outstanding balance thereof. In an application, abandoned for failure to pay the publication fee, the required reply must include payment of the publication fee.

(2) the petition fee as set forth in 37 CFR 1.17(m);

(3) a statement that the entire delay in filing the required reply from the due date for the reply until the filing of a grantable petition pursuant to 37 CFR 1.137(b) was unintentional. The Commissioner may required additional information where there is a question whether the delay was unintentional; and

(4) any terminal disclaimer (and fee as set forth in 37 CFR 1.20(d)) required pursuant to 37 CFR 1.137(c)).

filed on 10 November, 2005 (certificate of mailing date 7 November, 2005), and Advisory Action stating the period for reply expired four (4) months from the mailing of the final Office action was mailed 23 November, 2005. A two (2) month extension of time and an additional amendment after final rejection were filed on 9 January, 2006 (certificate of mailing date 5 January, 2006). An Advisory Action was mailed on 31 January, 2006. Notice of Abandonment was mailed on 22 February, 2006.

Petitioners have filed an amendment after final rejection as the required reply. As the examiner has determined that the amendment places the case in condition for allowance, the response may be favorably considered.

This application is being referred to Technology Center Art Unit 2859 for further processing.

Telephone inquiries concerning this matter may be directed to the undersigned at (571)272-3231.

DWood

Douglas I. Wood
Senior Petitions Attorney
Office of Petitions

UNITED STATES PATENT AND TRADEMARK OFFICE

COMMISSIONER FOR PATENTS
UNITED STATES PATENT AND TRADEMARK OFFICE
P.O. BOX 1450
ALEXANDRIA, VA 22313-1450
www.uspto.gov

APR 08 2004

Billy Ray Delp
2800 N. Meridian Ave.
Oklahoma City OK 73107-1041

In re Application of	:	
Billy Ray Delp	:	DECISION ON PETITION
Serial No.: 10/672,020	:	
Filed: September 27, 2003	:	
For: Exercise Device Portable	:	
Abdomen Reducer	:	

This is in response to applicants' petition filed September 27, 2003, to make the above-identified application special under the provisions of 37 CFR 1.102(c), based on the age of the applicant.

Applicant has satisfied the provisions set forth in M.P.E.P. 708.02, IV. Therefore the petition is **GRANTED**.

The application will be forwarded to the examiner for action on the merits commensurate with this decision.

Should there be any questions with regard to this letter please contact John Kittle by letter addressed to the Director, Technology Center 3700/2900, P.O. Box 1450 Alexandria, VA 22313-1450 Washington, DC 20231, or by telephone at (703) 308-0873 or by facsimile transmission at (703) 308-3139.

John E. Kittle

John E. Kittle
Director,
Technology Center 3700/2900

UNITED STATES PATENT AND TRADEMARK OFFICE

Commissioner for Patents
United States Patent and Trademark Office
P.O. Box 1450
Alexandria, VA 22313-1450
www.uspto.gov

DARBY & DARBY P.C.
P. O. BOX 5257
NEW YORK NY 10150-5257

COPY MAILED

SEP 30 2005

OFFICE OF PETITIONS

In re Patent No. 6,854,931 :
Issued: February 15, 2005 :
Application No. 10/672,024 : ON PETITION
Filed: September 26, 2003 :
Attorney Docket Number: 04637/0200019-US0 :

This is a decision on the petition, filed March 23, 2005, under 37 CFR 1.183, which is being treated as a request under 37 CFR 3.81(b)[1] to correct the assignee's name on the front of the Patent.

The petition is **GRANTED**.

Petitioner states that the correct assignee's name is PLC Trenching Co., LLC and that the failure to include the correct assignee name on the Fee(s) Transmittal form PTOL-85(b) was inadvertent. Accordingly, petitioner requests that a certificate of correction be issued to reflect the correct assignee on the front page of the Letters Patent.

37 CFR 3.81(b), effective June 25, 2004, reads:

> *After payment of the issue fee:* Any request for issuance of an application in the name of the assignee submitted after the date of payment of the issue fee, and any request for a patent to be corrected to state the name of the assignee, must state that the assignment was submitted for recordation as set forth in § 3.11 before issuance of the patent, and must include a request for a certificate of correction under § 1.323 of this chapter (accompanied by the fee set forth in § 1.20(a) and the processing fee set forth in § 1.17(i) of this chapter.

The request was accompanied by a certificate of correction (and fee) as required by 3.81(b). Further, Office assignment records reflect that PLC Trenching Co., LLC is the assignee of record. Accordingly, as the request complies with the provisions of 37 CFR 3.81(b), it would be appropriate for a certificate of correction to issue.

---

[1] *See* Official Gazette of June 22, 2004

A review of the record indicates that the certificate of correction was mailed May 26, 2005.

Inquiries concerning this decision should be directed to the undersigned at (571) 272-3212. Any questions concerning the certificate of correction should be directed to the Certificates of Correction Branch at (703) 305-8309.

Patricia Faison-Ball

Patricia Faison-Ball
Senior Petitions Attorney
Office of Petitions

UNITED STATES PATENT AND TRADEMARK OFFICE

AUG 15 2005

Commissioner for Patents
United States Patent and Trademark Office
P.O. Box 1450
Alexandria, VA 22313-1450
www.uspto.gov

JOHN JOSEPH HALL
1631 Beverly Boulevard
Los Angeles, CA 90026-5746

In re Application of	:	NOTICE OF
Mario Rios	:	WITHDRAWAL
Serial No: 10/672,031	:	FROM ISSUE
Filed: September 26, 2003	:	UNDER 37 CFR 1.313
For: ENCLOSED SPRING MECHANISM FOR TRAILER RAMP DOORS	:	

The purpose of this communication is to inform you that the above identified application is being withdrawn from issue pursuant to 37 CFR 1.313.

The application is being withdrawn to permit reopening of prosecution. The reasons therefor will be communicated to you by the examiner.

U.S. Patent and Trademark Office records reveal that the issue fee and the publication fee have not been paid. If the issue fee and publication fee have been submitted, the applicant may request a refund, or may request that the fee be credited to a deposit account. However, applicant may wait until the application is either again found allowable or held abandoned. If the application is allowed, upon receipt of a new Notice of Allowance and Fee(s) due, applicant may request that the previously submitted issue fee and publication fee be applied toward payment of the issue fee and publication fee in the amount identified on the new Notice of Allowance and Fee(s) Due. If the application is abandoned, applicant may request either a refund or a credit to a specified Deposit Account.

The application is being forwarded to the examiner for action.

Robert Oberleitner, Director
Patent Technology Center 3600
(571) 272-5350

UNITED STATES PATENT AND TRADEMARK OFFICE

Commissioner for Patents
United States Patent and Trademark Office
P.O. Box 1450
Alexandria, VA 22313-1450
www.uspto.gov

MAILED
MAR 24 2010
OFFICE OF PETITIONS

GENERAL ELECTRIC COMPANY
GLOBAL RESEARCH
ONE RESEARCH CIRCLE
PATENT DOCKET RM BLDG. K1-4A59
NISKAYUNA NY 12309

In re Application of	:	
Daniel White SEXTON, et al	:	
Application No. 10/672,043	:	ON PETITION
Filed: September 26, 2003	:	
Attorney Docket No. 125836-1	:	

This is a decision on the petition under the unintentional provisions of 37 CFR 1.137(b), filed January 5, 2010, to revive the above-identified application.

The petition is **GRANTED**.

This application became abandoned as a result of petitioner's failure to file an appeal brief (and fee required by 37 CFR 41.20(b)(2)) within the time period provided in 37 CFR 41.37(a)(1). An appeal brief (and appeal brief fee) was not filed within two (2) months of the Notice of Appeal filed September 4, 2009. No extensions of time under the provisions of 37 CFR 1.136(a) were obtained, the appeal was dismissed and the proceedings as to the rejected claims were terminated. See 37 CFR 1.197(b). As no claim was allowed, the application became abandoned on November 5, 2009. *See* MPEP 1215.04.

The petition satisfies the requirements of 37 CFR 1.137(b) in that petitioner has supplied (1) the reply in the form of an Appeal Brief and fee; (2) the petition fee of $1620; and (3) the required statement of unintentional delay.

Telephone inquiries concerning this decision should be directed to the undersigned at (571) 272-6735.

This application is being referred to Technology Center 2464 for further processing in the normal course of business on the reply received January 5, 2010.

/DCG/
Diane C. Goodwyn
Petitions Examiner
Office of Petitions

UNITED STATES PATENT AND TRADEMARK OFFICE

COMMISSIONER FOR PATENTS
UNITED STATES PATENT AND TRADEMARK OFFICE
P.O. BOX 1450
ALEXANDRIA, VA 22313-1450
www.uspto.gov

CONLEY ROSE, P.C.
P.O. BOX 3267
HOUSTON, TX 77253-3267

COPY MAILED
APR 15 2004
OFFICE OF PETITIONS

In re Application of	:	
Gray et al.	:	
Application No. 10/672,045	:	
Filed: September 26, 2003	:	DECISION GRANTING
Title of Invention: RESERVOIR FRACTURE	:	STATUS UNDER
CHARACTERIZATION	:	37 CFR 1.47(a)

This is in response to a Petition under 37 CFR 1.47, which is properly treated as a petition under 37 CFR 1.47(a), filed February 20, 2004, to allow the other inventor(s) to proceed with the application on behalf of himself or herself and the nonsigning inventor[1].

The petition is **granted**.

The above-identified application and papers have been reviewed and found in compliance with 37 CFR 1.47(a). This application is hereby accorded Rule 1.47(a) status.

Petitioner has shown that the non-signing inventor, Abdel M. Zellou, refuses to join in the application.

As provided in Rule 1.47(a), this Office will forward notice of this application's filing to the non-signing inventor at the addresses given in the Petition. Notice of the filing of this application will also be published in the Official Gazette.

The application file is being returned to the Office of Initial Patent Examination for continued processing.

Telephone inquiries related to this decision may be directed to the undersigned at (703) 305-0014.

Derek L. Woods
Petitions Attorney
Office of Petitions

[1] A petition under 37 CFR 1.47(b) is filed when none of the inventors have executed the oath or declaration.

UNITED STATES PATENT AND TRADEMARK OFFICE

COMMISSIONER FOR PATENTS
UNITED STATES PATENT AND TRADEMARK OFFICE
P.O. BOX 1450
ALEXANDRIA, VA 22313-1450
www.uspto.gov

ABDEL M. ZELLOU
13 RUE PIERRE LOTI
BOURG LA REINE, FRANCE 92340

COPY MAILED
APR 15 2004
OFFICE OF PETITIONS

In re Application of	:	
Gray et al.	:	
Application No. 10/672,045	:	
Filed: September 26, 2003	:	LETTER
Title of Invention: RESERVOIR FRACTURE	:	
CHARACTERIZATION	:	

Dear Mr. Zellou:

You are named as a joint inventor in the above-identified United States patent application filed under the provisions of 35 U.S.C. 116 (United States Code) and 37 CFR 1.47(a), Rules of Practice in Patent Cases. Should a patent be granted on the application you will be designated therein as a joint inventor.

As a named inventor you are entitled to inspect any paper in the file wrapper of the application, order copies of all or any part thereof (at a prepaid cost per 37 CFR 1.19) or make your position of record in the application. Alternatively, you may arrange to do any of the preceding through a registered patent attorney or agent presenting written authorization from you. If you care to join the application, counsel of record (see below) would presumably assist you. Joining in the application would entail the filing of an appropriate oath or declaration by you pursuant to 37 CFR 1.63.

Telephone inquiries regarding this communication should be directed to the undersigned at (703) 305-0014. Requests for information regarding your application should be directed to the File Information Unit at (703) 308-2733. Information regarding how to pay for and order a copy of the application, or a specific paper in the application, should be directed to Certification Division at (703) 308-9726 or 1-800-972-6382 (outside the Washington D.C. area).

Derek L. Woods
Petitions Attorney
Office of Petitions

cc: CONLEY ROSE, P.C.
P.O. BOX 3267
HOUSTON, TX 77253-3267

UNITED STATES PATENT AND TRADEMARK OFFICE

COMMISSIONER FOR PATENTS
UNITED STATES PATENT AND TRADEMARK OFFICE
P.O. BOX 1450
ALEXANDRIA, VA 22313-1450
www.uspto.gov

GRAY CARY WARE & FREIDENRICH LLP
2000 UNIVERSITY AVENUE
E. PALO ALTO CA 94303-2248

COPY MAILED

APR 21 2004

OFFICE OF PETITIONS
ON PETITION

In re Application of
Chhibber, et al.
Application No. 10/672,056
Filed: September 25, 2003
Attorney Docket No. 2501082-991101
For: HIGH DYNAMIC RANGE OPTICAL INSPECTION SYSTEM AND METHOD

This is a decision on the petition filed March 1, 2004 (certificate of mailing date February 23, 2004), requesting, in effect, partial withdrawal of a Notice mailed December 22, 2003.

The application was filed on September 25, 2003. However, on December 22, 2003, The Office of Initial Patent Examination mailed a "Notice to File Corrected Application Papers" (Notice) stating, *inter alia*, that the application had been accorded a filing date of September 25, 2003, and advising applicants that figures 23, 23A1 and 23A2 appeared to have been omitted.

In response, the present petition was filed. Petitioners argue that the drawings should be included with the papers filed on September 25, 2003, because they were originally filed in prior application No. 60/414,511, the entire disclosure of which was incorporated by reference at the time of filing.

The petition is dismissed.

Applicants seek to add the figures to the present application on the basis that the figures were incorporated by reference at the time the application was filed. However, no petition is necessary for that purpose. Additional figures may be entered by the primary examiner without a petition so long as the pages contain no new matter. See MPEP § 608.02(a).

MPEP 201.06(c) states that:

> . . . an applicant may incorporate by reference the prior application by including, in the application-as-filed, a statement that such specifically enumerated prior application or applications are "hereby incorporated herein by reference." The statement may appear in the specification or in the application transmittal letter. The inclusion of this incorporation by reference of the prior application(s) will permit an applicant to amend the continuing application to include any subject matter in such prior application(s), without the need for a petition. (emphasis supplied)

If applicants desire that figures 23, 23A1, and 23A2 be added to the application, the appropriate procedure is by way of amendment requesting the entry of the figures. Any such amendment should be filed prior to the first action on the merits and will be considered by the primary examiner.

Accordingly, the petition is inappropriate and is subject to dismissal.

The petition fee will not be refunded, since the petition was not necessitated by any error on the part of the Office.

The application is being returned to the Office of Initial Patent Examination for further processing with a filing date of September 25, 2003. It is noted that petitioners filed replacement drawings on March 1, 2004 (certificate of mailing date February 23, 2004). Replacement drawing figures 23, 23A1, and 23A2 will not be processed at this time.

Telephone inquiries specific to this matter should be directed to the undersigned at (703) 308-6712.

E. Shirene Willis

E. Shirene Willis
Senior Petitions Attorney
Office of Petitions
Office of the Deputy Commissioner
for Patent Examination Policy

UNITED STATES PATENT AND TRADEMARK OFFICE

COMMISSIONER FOR PATENTS
UNITED STATES PATENT AND TRADEMARK OFFICE
P.O. BOX 1450
ALEXANDRIA, VA 22313-1450
www.uspto.gov

JUL -1 2005

In re Application of	:	
Stephen Fitzgerald et al.	:	
Serial No. 10/672,060	:	DECISION ON PETITION
Filed: September 29, 2003	:	TO MAKE SPECIAL
For: TUBULAR BASEBALL BATS WITH	:	
VARIABLE BARRELS	:	

Applicant's petition, filed December 15, 2004, seeks to have this application made special because of the applicant's health, MPEP 708.02(III). The petition is GRANTED.

The petition has been reviewed and is found to be in compliance with the requirements for special status as set forth in Section 708.02(III) of the Manual of Patent Examining Procedures (MPEP).

PETITION GRANTED.

Richard A. Bertsch

Richard A. Bertsch, Director
Technology Center 3700

David J. French
P.O. Box 2486, Stn. D
Ottawa, Canada L1P 5W6

UNITED STATES PATENT AND TRADEMARK OFFICE

Commissioner for Patents
United States Patent and Trademark Office
P.O. Box 1450
Alexandria, VA 22313-1450
www.uspto.gov

COPY MAILED

APR 26 2007

OFFICE OF PETITIONS

COOLEY GODWARD KRONISH LLP
3000 EL CAMINO REAL
5 PALO ALTO SQUARE
PALO ALTO CA 94306

In re Application of	:	
James R. Mault, et al.	:	
Application No. 10/672,071	:	DECISION ON PETITION
Filed: September 25, 2003	:	TO WITHDRAW
Attorney Docket No. HTEC-003/01US	:	FROM RECORD
	:	

This is a decision on the Request to Withdraw as attorney or agent of record under 37 C.F.R. § 1.36(b) filed September 29, 2006.

The request is **DISMISSED** as moot.

A review of the file record indicates that the power of attorney to Cooley, Godward Kronish, LLP has been revoked by the assignee of the patent application on January 12, 2007. Accordingly, the request to withdraw under 37 C.F.R. § 1.36(b) is moot.

All future communications from the Office will continue to be directed to the below-listed address until otherwise notified by applicant.

Telephone inquires concerning this decision should be directed to undersigned at 571-272-1642.

April M. Wise
Petitions Examiner
Office of Petitions

cc: GEOFFREY STANIFORD
COURTNEY, STANIFORD & GREGORY, LLP
1001 N. DE ANZA BLVD
SUITE 300
CUPERTINO, CA 95014

UNITED STATES PATENT AND TRADEMARK OFFICE

UNITED STATES DEPARTMENT OF COMMERCE
United States Patent and Trademark Office
Address: COMMISSIONER FOR PATENTS
P.O. Box 1450
Alexandria, Virginia 22313-1450
www.uspto.gov

APPLICATION NUMBER	FILING OR 371 (c) DATE	FIRST NAMED APPLICANT	ATTY. DOCKET NO./TITLE
10/672,071	09/25/2003	James R. Mault	MLFE.P003

CONFIRMATION NO. 4720

OC000000023358065

OC000000023358065

53186
COURTNEY STANIFORD & GREGORY LLP
P.O. BOX 9686
SAN JOSE, CA 95157

Date Mailed: 04/12/2007

NOTICE OF ACCEPTANCE OF POWER OF ATTORNEY

This is in response to the Power of Attorney filed 01/12/2007.

The Power of Attorney in this application is accepted. Correspondence in this application will be mailed to the above address as provided by 37 CFR 1.33.

Office of Initial Patent Examination (571) 272-4000, or 1-800-PTO-9199
ATTORNEY/APPLICANT COPY

UNITED STATES PATENT AND TRADEMARK OFFICE

UNITED STATES DEPARTMENT OF COMMERCE
United States Patent and Trademark Office
Address: COMMISSIONER FOR PATENTS
P.O. Box 1450
Alexandria, Virginia 22313-1450
www.uspto.gov

APPLICATION NUMBER	FILING OR 371 (c) DATE	FIRST NAMED APPLICANT	ATTY. DOCKET NO./TITLE
10/672,071	09/25/2003	James R. Mault	HTEC-003/01US

CONFIRMATION NO. 4720

OC000000023358052

OC000000023358052

23419
COOLEY GODWARD KRONISH LLP
3000 EL CAMINO REAL
5 PALO ALTO SQUARE
PALO ALTO, CA 94306

Date Mailed: 04/12/2007

NOTICE REGARDING CHANGE OF POWER OF ATTORNEY

This is in response to the Power of Attorney filed 01/12/2007.

- The Power of Attorney to you in this application has been revoked by the assignee who has intervened as provided by 37 CFR 3.71. Future correspondence will be mailed to the new address of record(37 CFR 1.33).

Office of Initial Patent Examination (571) 272-4000, or 1-800-PTO-9199
NEW ATTORNEY/AGENT COPY

UNITED STATES PATENT AND TRADEMARK OFFICE

UNITED STATES DEPARTMENT OF COMMERCE
United States Patent and Trademark Office
Address: COMMISSIONER FOR PATENTS
P.O. Box 1450
Alexandria, Virginia 22313-1450
www.uspto.gov

APPLICATION NUMBER	FILING OR 371 (c) DATE	FIRST NAMED APPLICANT	ATTY. DOCKET NO./TITLE
10/672,071	09/25/2003	James R. Mault	HTEC-003/01US

CONFIRMATION NO. 4720

OC000000023358052

OC000000023358052

23419
COOLEY GODWARD KRONISH LLP
3000 EL CAMINO REAL
5 PALO ALTO SQUARE
PALO ALTO, CA 94306

Date Mailed: 04/12/2007

NOTICE REGARDING CHANGE OF POWER OF ATTORNEY

This is in response to the Power of Attorney filed 01/12/2007.

- The Power of Attorney to you in this application has been revoked by the assignee who has intervened as provided by 37 CFR 3.71. Future correspondence will be mailed to the new address of record(37 CFR 1.33).

Office of Initial Patent Examination (571) 272-4000, or 1-800-PTO-9199
FORMER ATTORNEY/AGENT COPY

UNITED STATES PATENT AND TRADEMARK OFFICE

COMMISSIONER FOR PATENTS
UNITED STATES PATENT AND TRADEMARK OFFICE
P.O. BOX 1450
ALEXANDRIA, VA 22313-1450
www.uspto.gov

CHRISTENSEN, O'CONNOR, JOHNSON, KINDNESS, PLLC
1420 FIFTH AVENUE
SUITE 2800
SEATTLE WA 98101-2347

COPY MAILED

FEB 06 2006

OFFICE OF PETITIONS

Applicant: Cutler
Appl. No.: 10/672,075
Filing Date: September 29, 2003
Title: METHOD AND APPARATUS FOR CONTROLLING POWER DRAWN FROM AN ENERGY CONVERTER
Attorney Docket No.: XANI121763
Pub. No.: US 2005/0068012 A1
Pub. Date: March 31, 2005

This is a decision on the request for a corrected patent application publication under 37 CFR 1.221(b), filed on May 31, 2005, for the above-identified application.

The request is granted.

The corrected patent application publication will be published in due course, unless the patent issues before the application is republished.

It would greatly benefit the Office if applicant did not provide a complete copy of the pregrant publication, as it unnecessarily increases the cost to the Office. See 37 CFR 1.4(b). A request for corrected publication need only point out what was printed incorrectly in the application, where the error occurs in the publication and where the correct text is found in the application papers. Marked up relevant copies of the applications papers and the pre-grant publication may facilitate processing of the request, where it is not readily apparent. If it is not clear why the error is a material error, further explanation may be warranted.

Inquiries relating to this matter may be directed to Mark Polutta at (571) 272-7709 (voice).

Mark O. Polutta
Office of Patent Legal Administration
Office of the Deputy Commissioner
for Patent Examination Policy

UNITED STATES PATENT AND TRADEMARK OFFICE

COMMISSIONER FOR PATENTS
UNITED STATES PATENT AND TRADEMARK OFFICE
P.O. BOX 1450
ALEXANDRIA, VA 22313-1450
www.uspto.gov

CHRISTENSEN, O'CONNOR, JOHNSON, KINDNESS, PLLC
1420 FIFTH AVENUE
SUITE 2800
SEATTLE WA 98101-2347

MAILED

JUN 08 2010

OFFICE OF PETITIONS

In re Patent No. 7,091,707 :
Issued: August 15, 2006 :
Application No. 10/672,075 : NOTICE
Filed: September 29, 2003 :
Atty. Dkt. No.: XANT121763 :

This is a notice regarding your request for acceptance of a fee deficiency submission under 37 CFR 1.28.

The Office no longer investigates or rejects original or reissue patent under 37 CFR 1.56. **1098 Off. Gaz. Pat. Office 502 (January 3, 1989)**. Therefore, nothing in this Notice is intended to imply that an investigation was done.

Your fee deficiency submission under 37 CFR 1.28 is hereby **ACCEPTED**.

This patent is no longer entitled to small entity status. Accordingly, all future fees paid in this patent must be paid at the large entity rate.

There is no indication that the petition is signed by a registered patent attorney or patent agent of record. However in accordance with 37 CFR 1.34, the signature of practitioner appearing on the correspondence shall constitute a representation to the United States Patent and Trademark Office that he is authorized to represent the particular party in whose behalf he acts. If practitioner desires to receive correspondence regarding this file, the appropriate power of attorney documents must be submitted. A courtesy copy of this decision is being mailed to practitioner, the petitioner herein. However, until otherwise instructed, all future correspondence regarding this application file will be directed solely to the above-noted correspondence address of record.

Inquiries related to this communication should be directed to the undersigned at (571) 272-3205.

/ALESIA M. BROWN/

Alesia M. Brown
Petitions Attorney
Office of Petitions

CC: RUDISILL,STEPHEN
Nixon Peabody LLP
300 S. Riverside Plaza
16th Floor
Chicago, IL 60606

UNITED STATES PATENT AND TRADEMARK OFFICE

Commissioner for Patents
United States Patent and Trademark Office
P.O. Box 1450
Alexandria, VA 22313-1450
www.uspto.gov

MAILED

MAY 24 2010

OFFICE OF PETITIONS

JOHN S. MUNDAY, ESQUIRE
LAW OFFICES OF JOHN S. MUNDAY
PO BOX 423
ISANTI MN 55040

In re Patent No. 6,918,138	:	
Issue Date: July 19, 2005	:	
Application No. 10/672,102	:	DECISION ON PETITION
Filed: September 26, 2003	:	
Attorney Docket No. 130139	:	

This is a decision on the petition under 37 CFR 1.378(c), filed April 12, 2010 to accept the unintentionally delayed payment of a maintenance fee for the above-identified patent.

The petition is **GRANTED**.

This patent expired on July 20, 2009 for failure to pay the three and one-half year maintenance fee. Since this petition was submitted within twenty-four months after the six-month grace period provided in 37 CFR 1.362(e), the petition was timely filed under the provisions of 37 CFR 1.378(c).

The maintenance fee is hereby accepted and the above-identified patent is reinstated as of the mail date of this decision.

It is not apparent whether the statement of unintentional delay was signed by a person who would have been in a position of knowing that the delay in filing a timely response was unintentional. Nevertheless, in accordance with 37 CFR 10.18, the statement is accepted as constituting a certification of unintentional delay. However, in the event that petitioner has no knowledge that the delay in paying the maintenance fee was in fact unintentional, petitioner must make such an inquiry to ascertain that, in fact, the delay was unintentional. If petitioner discovers that the delay in paying the maintenance fee was intentional, petitioner must so notify the Office. Further, it is not apparent whether the person signing the instant petition was ever given a power of attorney or authorization of agent to prosecute this patent. In accordance with 37 CFR 1.34(a), the signature appearing on the petition shall constitute a representation to the United States Patent and Trademark Office that he/she is authorized to represent the particular party in whose behalf he/she acts. Additionally, the address given on the petition differs from the address of record. A courtesy copy of this decision is being mailed to the address given

on the petition; however, the Office will mail all future correspondence solely to the address of record.

Telephone inquiries concerning this decision should be directed to the undersigned at (571) 272-7751.

Joan Olszewski
Petitions Examiner
Office of Petitions

cc: Alan M. Koenck
312 South Third Street
Minneapolis, MN 55415

UNITED STATES PATENT AND TRADEMARK OFFICE

Commissioner for Patents
United States Patent and Trademark Office
P.O. Box 1450
Alexandria, VA 22313-1450
www.uspto.gov

VINSON & ELKINS LLP
1001 FANNIN STREET
2300 FIRST CITY TOWER
HOUSTON TX 77002-6760

COPY MAILED
NOV 14 2006
OFFICE OF PETITIONS

In re Application of	:	
Ji, et al.	:	
Application No. 10/672,104	:	ON PETITION
Filed: September 26, 2003	:	
Docket No. INV850/4-001CON/58001	:	

This is a decision on the petition to revive under 37 CFR 1.137(b), filed August 29, 2006

The petition under 37 CFR 1.137(b) is **GRANTED**.

The above application became abandoned for failure to timely file a proper response to the non-final Office action mailed January 10, 2006. This Office action set a shortened statutory period for reply of three (3) months. No extensions of time under 37 CFR 1.136(a) were obtained. No reply having been received, the application became abandoned on April 30, 2006. A Notice of Abandonment was mailed on August 21, 2006.

With the instant petition, applicants paid the petition fee, made the proper statement of unintentional delay, and submitted the required reply in the form of an amendment.

Pursuant to 37 CFR 1.136, an extension of time must be filed prior to the expiration of the maximum period obtainable for reply to avoid abandonment. Accordingly, since the $1020.00 extension of time fee submitted with the petition on August 29, 2006 was subsequent to the maximum period obtainable for reply (July 10, 2006), this fee will be refunded to petitioner under separate cover.

The matter is being forwarded to Group Art Unit 1637 for consideration of the amendment filed August 29, 2006.

Telephone inquiries related to this decision should be directed to the undersigned at (571)272-3207.

Cliff Congo
Petitions Attorney
Office of Petitions

SPE RESPONSE FOR CERTIFICATE OF CORRECTION

Paper No.: _____

DATE : 9-6-05

TO SPE OF : ART UNIT 2872

SUBJECT : Request for Certificate of Correction on Patent No.: 6829091

A response is requested with respect to the accompanying request for a certificate of correction.

Please complete this form and return with file, within 7 days to:
Certificates of Correction Branch - PK 3-922
Palm location **7580** - Tel. No. 305-8309

With respect to the change(s) requested, correcting Office and/or Applicant's errors, should the patent read as shown in the certificate of correction? No new matter should be introduced, nor should the scope or meaning of the claims be changed.

Check claims

Thank You For Your Assistance

Certificates of Correction Branch

The request for issuing the above-identified correction(s) is hereby:

Note your decision on the appropriate box.

- ☒ **Approved** — All changes apply.
- ☐ **Approved in Part** — Specify below which changes **do not** apply.
- ☐ **Denied** — State the reasons for denial below.

Comments:

Ok to make changes.

SPE

2872

Art Unit

PTOL-306 (REV. 7/03)

Copied from 10762116 on 09/23/2005

U.S. DEPARTMENT OF COMMERCE Patent and Trademark Office

UNITED STATES PATENT AND TRADEMARK OFFICE

Commissioner for Patents
United States Patent and Trademark Office
P.O. Box 1450
Alexandria, VA 22313-1450
www.uspto.gov
DIW JA-05

DICKE, BILLIG & CZAJA, PLLC
SUITE 2250
FIFTH STREET TOWERS
100 SOUTH FIFTH STREET
MINNEAPOLIS MN 55402

COPY MAILED

JUL 14 2005

OFFICE OF PETITIONS

In re Application of	:
Jong-Hoon Oh	: DECISION DISMISSING PETITION
Application No. 10/672,118	: UNDER 37 CFR 3.81(b)
Filed: 26 September, 2003	:
Attorney Docket No.	:
2003P52610US/I331.111.101	:

This is a decision on the petition, filed on 12 May, 2005, which is being treated as a request under 37 CFR 3.81(b)[1] to correct the assignee on the front page of the above-identified patent by way of a Certificate of Correction.

The request is **DISMISSED**.

Petitioner states that the correct assignee's name is INFINEON TECHNOLOGIES AG. and that an incorrect assignee's name was unintentionally included on the Fee(s) Transmittal form PTOL-85(b) at the time of payment of the issue fee. Accordingly, petitioner requests that the patent issue to INFINEON TECHNOLOGIES AG.

37 CFR 3.81(b), effective June 25, 2004, reads:

> *After payment of the issue fee:* Any request for issuance of an application in the name of the assignee submitted after the date of payment of the issue fee, and any request for a patent to be corrected to state the name of the assignee, must state that the assignment was submitted for

[1] *See* Official Gazette of June 22, 2004

> recordation as set forth in § 3.11 before issuance of the patent, and must include a request for a certificate of correction under § 1.323 of this chapter (accompanied by the fee set forth in § 1.20(a) and the processing fee set forth in § 1.17(i) of this chapter.

It is noted that Application No. 10/672,118 issued as U.S. Patent No. 6,909,660 on 21 June, 2005.

The request under 37 CFR 3.81(b) was not accompanied by a request for a certificate of correction (and fee) as required by 3.81(b). As petitioner has failed to comply with the provisions of 37 CFR 3.81(a), the request cannot be granted.

A review of Office database assignment records reflects that an assignment to INFINEON TECHNOLOGIES AG has been recorded. Therefore, upon submission of the required certificate of correction and fee, it would be appropriate for the Office to issue a certificate of correction to correct the front page of the Letters Patent to reflect that INFINEON TECHNOLOGIES AG was the assignee of record at the time of issuance of the instant application into a patent. *Note also* 35 U.S.C. § 152.

In view of the above **the Certificates of Correction Branch is instructed to issue a certificate of correction upon submission by petitioner of a request for a certificate of correction (and fee) which sets forth INFINEON TECHNOLOGIES AG, as the assignee**. *No certificate of correction will be issued which sets forth an assignee other than the assignee set forth in this request. A copy of this decision* ***must*** *accompany the request for a Certificate of Correction.*

No further renewed request under 37 CFR 3.81(b) is necessary for consideration by the Office of Petitions for issuance of a certificate of correction in the name of the assignee set forth in this request, as this decision operates as an instruction to the Certificates of Correction Branch to issue the requested certificate of correction.

Counsel's deposit account will be charged the request fee of $130.00 required by 37 CFR 1.17(f). The balance of the $400.00 fee paid will be credited to counsel's deposit account, No. 50-0471.

Inquiries concerning this decision should be directed to the undersigned at (571) 272-3231.

Application No. 10/672,118

After the submission by petitioner of the request for a certificate of correction to correct the assignee data on the front page of the Letters Patent, any questions pertinent thereto should be directed to the Certificates of Correction Branch at (703) 305-8309.

D Wood

Douglas I. Wood
Senior Petitions Attorney
Office of Petitions

UNITED STATES PATENT AND TRADEMARK OFFICE

Commissioner for Patents
United States Patent and Trademark Office
P.O. Box 1450
Alexandria, VA 22313-1450
www.uspto.gov

COPY MAILED

AUG 03 2007

OFFICE OF PETITIONS

HENRY C. QUERY, JR.
504 S. PIERCE AVENUE
WHEATON IL 60187

In re Application of	:	
William S. Suhr et al	:	
Application No. 10/672,124	:	ON PETITION
Filed: September 26, 2003	:	
Attorney Docket No. SUHR-P001A	:	

This is a decision on the petition, filed July 31, 2007, under 37 CFR 1.313(c)(2) to withdraw the above-identified application from issue after payment of the issue fee.

The petition is **GRANTED.**

The above-identified application is withdrawn from issue for consideration of a submission under 37 CFR 1.114 (request for continued examination). See 37 CFR 1.313(c)(2).

Petitioner is advised that the issue fee paid on in the above-identified application cannot be refunded. If, however, the above-identified application is again allowed, petitioner may request that it be applied towards the issue fee required by the new Notice of Allowance.[1]

Telephone inquiries should be directed to the undersigned at (571) 272-3208.

The examiner of Technology Center AU 3734 will consider the request for continued examination under 37 CFR 1.114 submitted on June 8, 2007

Karen Creasy

Karen Creasy
Petitions Examiner
Office of Petitions

---

[1] The request to apply the issue fee to the new Notice may be satisfied by completing and returning the new Issue Fee Transmittal Form PTOL-85(b), which includes the following language thereon: "Commissioner for Patents is requested to apply the Issue Fee and Publication Fee (if any) or re-apply any previously paid issue fee to the application identified above." Petitioner is advised that, whether a fee is indicated as being due or not, the Issue Fee Transmittal Form **must** be completed and timely submitted to avoid abandonment. Note the language in bold text on the first page of the Notice of Allowance and Fee(s) Due (PTOL-85).

SPE RESPONSE FOR CERTIFICATE OF CORRECTION

Paper No.: X

DATE : **May 14, 2008**

TO SPE OF : ART UNIT **3734**

SUBJECT : Request for Certificate of Correction for Appl. No.: **10/672124** Patent No.: **7323009 B2**

A response is requested with respect to a request for a certificate of correction.

With respect to the change(s) requested to correct Office and/or Applicant's errors, should the patent read as shown in the certificate of correction attached herewith or the COCIN document(s), in IFW images for the above-identified patented application? No new matter should be introduced, nor should the scope or meaning of the claims be changed.

If the response is for an IFW, within **7** days, please complete and forward the response, to the employee (named below) via scanning into application images, using document code **COCX**.

DO NOT SENT TO ATTORNEY

If the response is for a paper file wrapper, please complete the response and forward the response with the paper file wrapper, to the employee (named below), within **7** days, to:

Certificates of Correction Branch (CofC)
South Tower - 9A22
Palm Location 7580

You can fax the Directors/SPE response to 571-270-9990

LAMONTE NEWSOME
Certificates of Correction Branch
703-308-9390 ext. 112

Thank You For Your Assistance

The request for issuing the above-identified correction(s) is hereby:

Note your decision on the appropriate box.

- ☑ **Approved** — **All** changes apply.
- ☐ **Approved in Part** — Specify below which changes **do not** apply.
- ☐ **Denied** — State the reasons for denial below.

Comments: _____

_____

_____

_____

_____

SPE

3773/3734
Art Unit

UNITED STATES PATENT AND TRADEMARK OFFICE

UNITED STATES DEPARTMENT OF COMMERCE
United States Patent and Trademark Office
Address: COMMISSIONER FOR PATENTS
P.O. Box 1450
Alexandria, Virginia 22313-1450
www.uspto.gov

SHUMAKER & SIEFFERT, P. A.
1625 RADIO DRIVE
SUITE 300
WOODBURY, MN 55125

Mail Date: 04/20/2010

Applicant	: Lalitha Vaidyanathan	: DECISION ON REQUEST FOR
Patent Number	: 7630904	: RECALCULATION of PATENT
Issue Date	: 12/08/2009	: TERM ADJUSTMENT IN VIEW
Appliction No	: 10/672,136	: OF WYETH AND NOTICE OF INTENT TO
Filed	: 09/26/2003	: ISSUE CERTIFICATE OF CORRECTION
		:

The Request for Recalculation is **GRANTED** to the extent indicated.

The patent term adjustment has been determined to be **993** days. The USPTO will *sua sponte* issue a certificate of correction reflecting the amount of PTA days determined by the recalculation.

Prior to the issuance of the certificate of correction, the USPTO will afford patentee an opportunity to be heard and request reconsideration. Accordingly, patentee has **one month or thirty (30) days**, whichever is longer, to file a request for reconsideration of this patent term adjustment calculation. See 35 U.S.C. 154(b)(3)(B)(ii) and 37 CFR 1.322(a)(4). No extensions of time will be granted under 37 CFR 1.136.

Patentee should use document code PET.OP if electronically filing a request for reconsideration of this patent term adjustment calculation. The patentee must also include the information required by 37 CFR 1.705(b)(2) and the fee required by 37 CFR 1.18(e). If patentee does not file a timely request for reconsideration of this patent term adjustment calculation including the information required by 37 CFR 1.705(b)(2) and the fee required by 37 CFR 1.18(e), the USPTO will issue a certificate of correction reflecting the PTA determination noted above.

Patentee should be aware that in order to preserve the right to review in the United States District Court for the District of Columbia of the USPTO patent term adjustment determination, patentee must ensure that he or she also take the steps required under 35 U.S.C. 154(b)(4)(A) in a timely manner. Nothing in the request for recalculation should be construed as providing an alternative time frame for commencing a civil action under 35 U.S.C. 154(b)(4)(A).

Any questions concerning this decision should be directed to the Office of Patent Legal Administration at 571-272-7702.

UNITED STATES PATENT AND TRADEMARK OFFICE

Commissioner for Patents
United States Patent and Trademark Office
P.O. Box 1450
Alexandria, VA 22313-1450
www.uspto.gov

WOOD, HERRON & EVANS, LLP
2700 CAREW TOWER
441 VINE STREET
CINCINNATI OH 45202

COPY MAILED

APR 0 3 2007

OFFICE OF PETITIONS

In re Application of	:	
Kruger, Robert A.	:	
Application No. 10/672,137	:	ON PETITION
Filed: September 26, 2003	:	
Attorney Docket No. OPTO/11	:	

This is a decision on the petition under 37 C.F.R. § 1.137(b), filed February 1, 2007, to revive the above-identified application.

The petition is **GRANTED.**

The petition satisfies the conditions for revival pursuant to the provisions of 37 CFR 1.137(b) in that (1) the reply in the form of an Amendment; (2) the petition fee; and (3) the required statement of unintentional delay have been received. Accordingly, the response has been accepted as having been unintentionally delayed.

An extension of time under 37 CFR 1.136 must be filed prior to the expiration of the maximum extendable period for reply. See In re Application of S., 8 USPQ2d 1630, 1631 (Comm'r Pats. 1988). Accordingly, since the $1020.00 extension of time fee submitted with the petition on February 1, 2007 was subsequent to the maximum extendable period for reply, this fee is unnecessary and will be refunded to petitioner's credit card.

This matter is being referred to Technology Center 3700 for further examination on the merits.

Telephone inquiries regarding this decision should be directed to the undersigned at (571) 272-3206.

Liana Walsh
Petitions Examiner
Office of Petitions

United States
Patent And
Trademark Office

P.O. Box 1450, Alexandria, Virginia 22313-1450 – www.uspto.gov

02/17/04

Philip M. Kolehmaingen
Greer, Burns & Crain, LTD.
300 South Wacker Drive
Suite 2500
Chicago, IL 60606

Dear Applicant:

The Box PGPub replacement drawings for application number 10/672147 received on 12/29/03 by the U. S. Patent and Trademark Office will be included for patent publication.

Telephone inquiries should be directed to Kaletus King, Office of Pre-Grant Publication, at 703 605-4283.

Signature of Reviewer, Office of Pre-Grant Publication

3/31/05

OIPE JC88
DEC 2 9 2003
PATENT & TRADEMARK OFFICE

PATENT

IN THE UNITED STATES PATENT AND TRADEMARK OFFICE

Applicant:	Bantz, Shannon R.
Application:	Cascading tub filler and overflow assembly
Serial No.:	10/672,147
Filing Date:	September 25, 2003
Attorneys Docket No.:	0732.66933

CERTIFICATE OF MAILING: I hereby certify that this correspondence is being deposited with the United States Postal Service as first class mail in an envelope addressed to Commissioner for Patents, P. O. Box 1450, Alexandria, VA 22313-1450, on

23 Dec 03
Date

Philip M. Kolehmainen

300 S. Wacker Drive, Suite 2500
Chicago, Illinois 60606-6501

Mail Stop PGPUB Drawings
Commissioner for Patents
P. O. Box 1450
Alexandria, VA 22313-1450

FILING OF FORMAL REPLACEMENT DRAWINGS FOR PUBLICATION

Sir:

Enclosed are formal drawings (replacement sheets 1-4) to replace the corresponding informal drawing pages presently on file. The replacement drawings are submitted to comply with 37 CFR § § 1.84 and 1.121. Please use these replacement formal drawings for the patent application publication.

02/17/2004 KKING1 00000002 501967 10672147
01 FC:8029 130.00 DA

It is believed that no fee is due with respect to the present filing. However if a fee is due, please charge any fee to the deposit account, No 50-1967, of the undersigned.

Respectfully submitted,

Philip M. Kolehmainen
Reg. No. 22,992
Telephone No. 312-987-2914

UNITED STATES PATENT AND TRADEMARK OFFICE

Commissioner for Patents
United States Patent and Trademark Office
P.O. Box 1450
Alexandria, VA 22313-1450
www.uspto.gov

MORRISON & FOERSTER LLP
1650 TYSON BOULEVARD
SUITE 400
MCLEAN, VA 22102

COPY MAILED

JUL 0 6 2007

OFFICE OF PETITIONS

In re Application of
Selena CHAN, et al
Application No. 10/672,149
Filed: September 26, 2003
Attorney Docket No. 070702007620

DECISION ON PETITION
TO WITHDRAW
FROM RECORD

This is a decision on the Request to Withdraw as attorney or agent of record under 37 C.F.R. § 1.36(b), filed March 23, 2007.

The request is **APPROVED**.

A grantable request to withdraw as attorney/agent of record must be signed by every attorney/agent seeking to withdraw or contain a clear indication that one attorney is signing on behalf of another/others. A request to withdraw will not be approved unless at least 30 (thirty) days would remain between the date of approval and the later of the expiration date of a time to file a response or the expiration date of the maximum time period which can be extended under 37 C.F.R. § 1.136(a).

The request was signed by Peter J. Davis on behalf of all attorneys of record who associated with customer No. 25227.

All attorneys/agents associated with Customer Number 25227 have been withdrawn.

Applicant is reminded that there is no attorney of record at this time.

The request to change the correspondence of record is not acceptable as the requested correspondence address is not that of: (1) the first named signing inventor; or (2) an intervening assignee of the entire interest under 37 C.F.R 3.71. All future communications from the Office will be directed to the assignee of the entire interest at the first copied address below until otherwise properly notified by the applicant.

There are no Office actions pending at the present time.

Telephone inquiries concerning this decision should be directed to Diane Goodwyn at 571-272-6735.

April Wise
Petitions Examiner
Office of Petitions

cc: INTEL CORPORATION
2200 MISSION COLLEGE BLVD.
SANTA CLARA, CA 95052

cc: RAJ S. DAVE, PH.D.
DARBY & DARBY P.C.
1500 K STREET, N.W.
SUITE 250
WASHINGTON, D.C. 20005-1714

UNITED STATES PATENT AND TRADEMARK OFFICE

UNITED STATES DEPARTMENT OF COMMERCE
United States Patent and Trademark Office
Address: COMMISSIONER FOR PATENTS
P.O. Box 1450
Alexandria, Virginia 22313-1450
www.uspto.gov

APPLICATION NUMBER	FILING OR 371 (c) DATE	FIRST NAMED APPLICANT	ATTY. DOCKET NO./TITLE
10/672,149	09/26/2003	Selena Chan	070702007620

CONFIRMATION NO. 6083

OC000000024103329

25227
MORRISON & FOERSTER LLP
1650 TYSONS BOULEVARD
SUITE 400
MCLEAN, VA 22102

Date Mailed: 05/29/2007

NOTICE REGARDING CHANGE OF POWER OF ATTORNEY

This is in response to the Power of Attorney filed 03/23/2007.

- The withdrawal as attorney in this application has been accepted. Future correspondence will be mailed to the new address of record. 37 CFR 1.33.

Office of Initial Patent Examination (571) 272-4000, or 1-800-PTO-9199
FORMER ATTORNEY/AGENT COPY

UNITED STATES PATENT AND TRADEMARK OFFICE

UNITED STATES DEPARTMENT OF COMMERCE
United States Patent and Trademark Office
Address: COMMISSIONER FOR PATENTS
P.O. Box 1450
Alexandria, Virginia 22313-1450
www.uspto.gov

INTEL/BSTZ
BLAKELY SOKOLOFF TAYLOR & ZAFMAN LLP
1279 OAKMEAD PARKWAY
SUNNYVALE, CA 94085-4040

Mail Date: 07/29/2010

Applicant	: Nicholas G. Samra	: DECISION ON REQUEST FOR
Patent Number	: 7653904	: RECALCULATION of PATENT
Issue Date	: 01/26/2010	: TERM ADJUSTMENT IN VIEW
Application No	: 10/672,150	: OF WYETH AND NOTICE OF INTENT TO
Filed	: 09/26/2003	: ISSUE CERTIFICATE OF CORRECTION
		:

The Request for Recalculation is **GRANTED** to the extent indicated.

The patent term adjustment has been determined to be **1614** days. The USPTO will *sua sponte* issue a certificate of correction reflecting the amount of PTA days determined by the recalculation.

Prior to the issuance of the certificate of correction, the USPTO will afford patentee an opportunity to be heard and request reconsideration. Accordingly, patentee has **one month or thirty (30) days**, whichever is longer, to file a request for reconsideration of this patent term adjustment calculation. See 35 U.S.C. 154(b)(3)(B)(ii) and 37 CFR 1.322(a)(4). No extensions of time will be granted under 37 CFR 1.136.

Patentee should use document code PET.OP if electronically filing a request for reconsideration of this patent term adjustment calculation. The patentee must also include the information required by 37 CFR 1.705(b)(2) and the fee required by 37 CFR 1.18(e). If patentee does not file a timely request for reconsideration of this patent term adjustment calculation including the information required by 37 CFR 1.705(b)(2) and the fee required by 37 CFR 1.18(e), the USPTO will issue a certificate of correction reflecting the PTA determination noted above.

Patentee should be aware that in order to preserve the right to review in the United States District Court for the District of Columbia of the USPTO patent term adjustment determination, patentee must ensure that he or she also take the steps required under 35 U.S.C. 154(b)(4)(A) in a timely manner. Nothing in the request for recalculation should be construed as providing an alternative time frame for commencing a civil action under 35 U.S.C. 154(b)(4)(A).

Any questions concerning this decision should be directed to the Office of Patent Legal Administration at 571-272-7702.

UNITED STATES PATENT AND TRADEMARK OFFICE

Commissioner for Patents
United States Patent and Trademark Office
P.O. Box 1450
Alexandria, VA 22313-1450
www.uspto.gov

KEVIN D. MCCARTHY
ROACH BROWN MCCARTHY & GRUBER P.C.
420 MAIN STREET - 1620 LIBERTY BUILDING
BUFFALO, NY 14202

COPY MAILED
APR 0 6 2006
OFFICE OF PETITIONS

In re Application of	:	
Adam Tartar Richardson et al	:	
Application No. 10/672,169	:	ON PETITION
Filed: September 26, 2003	:	
Attorney Docket No. 0-02-141.01	:	

This is a decision on the petition under 37 CFR 1.137(b), filed January 23, 2006, to revive the above-identified application.

The petition is **GRANTED**.

The above-identified application became abandoned for failure to reply in a timely manner to the non-final Office action mailed June 10, 2005 which set a shortened statutory period for reply of three (3) months. No extensions of time under the provisions of 37 CFR 1.136(a) were obtained. Accordingly, the above-identified application became abandoned on September 11, 2005.

The instant petition satisfies the conditions for revival pursuant to the provisions of 37 CFR 1.137(b) in that (1) the reply in the form of an amendment filed December 13, 2005; (2) the petition fee; and (3) the required statement of unintentionally delay have been received. Accordingly, the reply to the non-final Office action of June 10, 2005 is accepted as having been unintentionally delayed.

This matter will be referred to Technology Center AU 3752.

Telephone inquiries concerning this decision should be directed to Wan Laymon at (571) 272-3220.

Wan Laymon
Wan Laymon
Petitions Examiner
Office of Petitions

UNITED STATES PATENT AND TRADEMARK OFFICE

UNITED STATES DEPARTMENT OF COMMERCE
United States Patent and Trademark Office
Address: COMMISSIONER FOR PATENTS
P.O. Box 1450
Alexandria, Virginia 22313-1450
www.uspto.gov

APPLICATION NO.	FILING DATE	FIRST NAMED INVENTOR	ATTORNEY DOCKET NO.	CONFIRMATION NO.
10/672,190	09/26/2003	Michio Ono	12262/3	8972

757 7590 12/31/2007
BRINKS HOFER GILSON & LIONE
P.O. BOX 10395
CHICAGO, IL 60610

EXAMINER
MOORE, MARGARET G

ART UNIT	PAPER NUMBER
1796	

MAIL DATE	DELIVERY MODE
12/31/2007	PAPER

Please find below and/or attached an Office communication concerning this application or proceeding.

The time period for reply, if any, is set in the attached communication.

CERTIFICATE OF ELECTRONIC FILING
I hereby certify that this correspondence is being electronically filed with the U.S. Patent and Trademark Office on the below date.
Date: December 5, 2007 Name: G. Peter Nichols Signature:

REQUEST FOR WITHDRAWAL AS ATTORNEY OR AGENT AND CHANGE OF CORRESPONDENCE ADDRESS		
	Application Number:	10/672,190
	Filing Date:	September 26, 2003
	First Named Inventor:	Michio Ono
	Art Unit: Confirmation No.:	1796 8972
	Examiner Name:	Moore
	Attorney Docket No.:	12262/3 (FA3139J/US)

To: Commissioner For Patents
P.O. Box 1450
Alexandria, VA 22313-1450

Approved
Jacqueline M. Stone, Director
Technology Center 1700
12-31-07

Please withdraw me as attorney for the above identified application, and

☐ all the attorneys/agents of record.

☐ the attorneys/agents (with registration numbers) listed on the attached paper(s), or

☒ the attorneys/agents associated with Customer Number 00757 - Brinks Hofer Gilson Lione
NOTE: This box can only be checked when the power of attorney of record in the application is to all the practitioners associated with a customer number.

The reasons for this request are: "Withdrawal of Representation"

CHANGE OF CORRESPONDENCE ADDRESS

1. ☐ The correspondence address is NOT affected by this withdrawal.

2. ☒ Change the correspondence address and direct all future correspondence to:

☐ The address associated with Customer Number: 00757 - Brinks Hofer Gilson Lione

OR

☒ **Firm or Individual Name**	**Brett S. Sylvester, Esq., c/o Sughrue Mion, PLLC**				
Address	**2100 Pennsylvania Avenue, NW, Suite 800**				
City	**Washington**	**State**	**D.C.**	**Zip**	**20037-3213**
Country	**U.S.A.**				
Telephone	**202.293.7060**	**Fax**	**202.293.7860**		

Signature			
Name	G. Peter Nichols	**Registration No.**	34,401
Date	12/5/07	**Telephone No.**	312.321.4276

NOTE: Withdrawal is effective when approved rather than when received. Unless there are at least 30 days between approval of withdrawal and the expiration date of a time period for response or possible extension period, the request to withdraw is normally disapproved.

This collection of information is required by 37CFR 1.36. The information is required to obtain or retain a benefit by the public which is to file (and by the USPTO to process) an application. Confidentiality is governed by 35 U.S.C. 122 and 37 CFR 1.11 and 1.14. This collection is estimated to take 12 minutes to complete, including gathering, preparing, and submitting the completed application form to the USPTO. Time will vary depending upon the individual case. Any comments on the amount of time you require to complete this form and/or suggestions for reducing this burden, should be sent to the Chief Inforamtion Officer, U.S. Patent and Trademark Office, U.S. Department of Commerce, P.O. Box 1450, Alexandria, VA 22313-1450. DO NOT SEND FEES OR COMPLETED FORMS TO THIS ADDRESS. **SEND TO: Commissioner for Patents, P.O. Box 1450, Alexandria, VA 22313-1450.**
If you need assistance in completing the form, call 1-800-PTO-9199 and select option 2.

UNITED STATES PATENT AND TRADEMARK OFFICE

Commissioner for Patents
United States Patent and Trademark Office
P.O. Box 1450
Alexandria, VA 22313-1450
www.uspto.gov

Paper No. 030105

HOVEY WILLIAMS LLP
2405 GRAND BOULEVARD, SUITE 400
KANSAS CITY, MO 64108

MAR 0 9 2005

In re Application of:
MAURICE SMITH et al.
Application No. 10/672,211
Filed: September 26, 2003
Attorney Docket No. 33063

DECISION ON PETITION
TO MAKE SPECIAL

This is a decision on the petition under 37 C.F.R. § 1.102, filed September 26, 2003, to make the above-identified application special.

Petitioner requests that the above-identified application be made special under the accelerated examination procedure set forth in the Manual of Patent Examining Procedure (M.P.E.P.), Section 708.02, Item XI: Inventions for Counter Terrorism.

A grantable petition to make special under 37 C.F.R. § 1.102 and in accordance with M.P.E.P., Section 708.02, Item XI, must be accompanied by the petition fee under 37 C.F.R. 1.17(h) and a statement explaining how the invention contributes to countering terrorism.

The petition contains the petition fee and a statement in accordance with M.P.E.P., Section 708.02, Item XI.

For the above stated reasons, the petition is GRANTED.

The application is being forwarded to the examiner for expedited prosecution.

If the examiner determines that restriction is necessary, he/she will follow the established telephone practice to resolve the restriction. If applicant elects with traverse the application will be forwarded to the Special Programs Examination unit to vacate this decision, and the application will be taken up by the examiner for action in its regular turn.

If the examiner can make this application special without prejudice to any possible interfering applications, and he/she should make a rigid search for such, he/she is authorized to do so for the next action. Should the application be rejected, the application will not be considered special for the subsequent action unless the applicant promptly makes a bona fide effort to place the application in condition for allowance, even if it is necessary to have an interview with the examiner to accomplish this purpose.

If the examiner finds any interfering application for the same subject matter, he/she should consider such application simultaneously with this application and should state in the official letter of such application that she/he is taking it out of its turn because of possible interference.

Should an appeal be taken in this application or should this application becomes involved in an interference, consideration of the appeal and the interference will be expedited by all Patent and Trademark Office officials concerned, contingent likewise upon diligent prosecution by the applicant.

After allowance, this application will be given priority for printing. See M.P.E.P. Section 1309.

Inquiries regarding this decision should be directed to Jose' G. Dees at (571) 272-1569.

Jose' G. Dees, Special Programs Examiner
Technology Center 2800
Semiconductors, Electrical and Optical
Systems and Components

UNITED STATES PATENT AND TRADEMARK OFFICE

Commissioner for Patents
United States Patent and Trademark Office
P.O. Box 1450
Alexandria, VA 22313-1450
www.uspto.gov

RATNERPRESTIA
P O BOX 980
VALLEY FORGE PA 19482-0980

COPY MAILED

SEP 18 2006

OFFICE OF PETITIONS

In re Application of Alferiev et al. Application No. 10/672,225 Filed: September 26, 2003 Title of Invention: METHOD OF DETERMINING SURFACE BINDING CAPACITY	DECISION ON PETITIONS UNDER 37 CFR 1.78(a)(3) AND (a)(6)

This is a decision on the petition under 37 CFR §§ 1.78(a)(3) and 1.78(a)(6), filed November 2, 2005, to accept an unintentionally delayed claim under 35 U.S.C. §§120 and 119(e) for the benefit of priority to the prior-filed applications set forth in the concurrently filed amendment. The delay in treating this petition is regretted.

The petition is **GRANTED**.

A petition for acceptance of a claim for late priority under 37 CFR §§ 1.78(a)(3) and 1.78(a)(6) is only applicable to those applications filed on or after November 29, 2000. Further, the petition is appropriate only after the expiration of the period specified in 37 CFR §§ 1.78(a)(2)(ii) and 1.78(a)(5)(ii). In addition, the petition under 37 CFR §§ 1.78(a)(3) and 1.78(a)(6) must be accompanied by:

> **(1)** the reference required by 35 U.S.C. §§ 120 and 119(e) and 37 CFR §§ 1.78(a)(2)(i) and 1.78(a)(5)(i) of the prior-filed application, unless previously submitted;
> **(2)** the surcharge set forth in § 1.17(t); and
> **(3)** a statement that the entire delay between the date the claim was due under 37 CFR §§ 1.78(a)(2)(ii) and 1.78(a)(5)(ii) and the date the claim was filed was unintentional.
>
> The Director may require additional information where there is a question whether the delay was unintentional.

Additionally, the instant nonprovisional application must be pending at the time of filing of the reference to the prior-filed provisional application(s) as required by 37 CFR 1.78(a)(5)(ii). Further, the nonprovisional application(s) claiming the benefit of the prior-filed provisional application(s) must have been filed within twelve months of the filing date of the prior-filed provisional application(s).

All of the above requirements having been satisfied, the late claim for benefit of priority to the prior-filed applications under 35 U.S.C. §§ 120 and 119(e) is accepted as being unintentionally delayed.

The granting of the petition to accept the delayed benefit claim to the prior-filed applications under 37 CFR §§ 1.78(a)(3) and 1.78(a)(6) should not be construed as meaning that this application is entitled to the benefit of the filing date of the prior-filed applications. In order for this application to be entitled to the benefit of the prior-filed applications, all other requirements under 35 U.S.C. §§120 and 1.78(a)(1) and (a)(2) and under 35 U.S.C. §119(e) and 37 CFR 1.78(a)(4) and (a)(5) must be met. Similarly, the fact that the corrected Filing Receipt accompanying this decision on petition includes the prior-filed applications should not be construed as meaning that applicant is entitled to the claim for benefit of priority to the prior-filed applications noted thereon. Accordingly, the examiner will, in due course, consider this benefit claim and determine whether the application is entitled to the benefit of the earlier filing date.

Also, 37 CFR §§ 1.78(a)(3) and 1.78(a)(6) require a statement that the entire delay between the date the claim was due under 37 CFR §§ 1.78(a)(2)(ii) and 1.78(a)(5)(ii) and the date the claim was filed was unintentional. Since the statement appearing in the petition varies from the required language, the statement is being construed as the statement required by 37 CFR §§1.78(a)(3) and 1.78(a)(6). If this is not a correct reading of the statement appearing in the petition, petitioner should promptly notify the Office.

A corrected Filing Receipt, which includes the priority claim to the prior-filed applications, accompanies this decision on petition.

Any questions concerning this matter may be directed to Derek L. Woods at (571) 272-3232. All other inquiries concerning either the examination procedures or status of the application should be directed to the Technology Center.

This application is being referred to Technology Center Art Unit 2878 for consideration by the examiner of the claim for benefit of priority under 35 U.S.C. § §120 and 119(e) to the prior-filed nonprovisional and provisional applications.

Frances Hicks
Lead Paralegal
Office of Petitions

ATTACHMENT : Corrected Filing Receipt

UNITED STATES PATENT AND TRADEMARK OFFICE

UNITED STATES DEPARTMENT OF COMMERCE
United States Patent and Trademark Office
Address: COMMISSIONER FOR PATENTS
P.O. Box 1450
Alexandria, Virginia 22313-1450
www.uspto.gov

APPL NO.	FILING OR 371 (c) DATE	ART UNIT	FIL FEE REC'D	ATTY.DOCKET NO	DRAWINGS	TOT CLMS	IND CLMS
10/672,225	09/26/2003	1641	530	RCHP-125US1	2	30	2

CONFIRMATION NO. 2873

23122
RATNERPRESTIA
P O BOX 980
VALLEY FORGE, PA 19482-0980

CORRECTED FILING RECEIPT

OC000000020201752

Date Mailed: 08/28/2006

Receipt is acknowledged of this regular Patent Application. It will be considered in its order and you will be notified as to the results of the examination. Be sure to provide the U.S. APPLICATION NUMBER, FILING DATE, NAME OF APPLICANT, and TITLE OF INVENTION when inquiring about this application. Fees transmitted by check or draft are subject to collection. Please verify the accuracy of the data presented on this receipt. **If an error is noted on this Filing Receipt, please mail to the Commissioner for Patents P.O. Box 1450 Alexandria Va 22313-1450. Please provide a copy of this Filing Receipt with the changes noted thereon. If you received a "Notice to File Missing Parts" for this application, please submit any corrections to this Filing Receipt with your reply to the Notice. When the USPTO processes the reply to the Notice, the USPTO will generate another Filing Receipt incorporating the requested corrections (if appropriate).**

Applicant(s)

Ivan Alferiev, Clementon, NJ;
Ilia Fishbein, Philadelphia, PA;
Robert J. Levy, Merion Station, PA;

Power of Attorney: The patent practitioners associated with Customer Number **23122**.

Domestic Priority data as claimed by applicant

This appln claims benefit of 60/413,460 09/26/2002
and is a CIP of 10/170,411 06/14/2002
which claims benefit of 60/298,116 06/15/2001 ABN

Foreign Applications

If Required, Foreign Filing License Granted: 12/17/2003

The country code and number of your priority application, to be used for filing abroad under the Paris Convention, is US10/672,225

Projected Publication Date: Not Applicable

Non-Publication Request: No

Early Publication Request: No

**** SMALL ENTITY ****

Title

Method of determining surface binding capacity

Preliminary Class

530

PROTECTING YOUR INVENTION OUTSIDE THE UNITED STATES

Since the rights granted by a U.S. patent extend only throughout the territory of the United States and have no effect in a foreign country, an inventor who wishes patent protection in another country must apply for a patent in a specific country or in regional patent offices. Applicants may wish to consider the filing of an international application under the Patent Cooperation Treaty (PCT). An international (PCT) application generally has the same effect as a regular national patent application in each PCT-member country. The PCT process **simplifies** the filing of patent applications on the same invention in member countries, but **does not result** in a grant of "an international patent" and does not eliminate the need of applicants to file additional documents and fees in countries where patent protection is desired.

Almost every country has its own patent law, and a person desiring a patent in a particular country must make an application for patent in that country in accordance with its particular laws. Since the laws of many countries differ in various respects from the patent law of the United States, applicants are advised to seek guidance from specific foreign countries to ensure that patent rights are not lost prematurely.

Applicants also are advised that in the case of inventions made in the United States, the Director of the USPTO must issue a license before applicants can apply for a patent in a foreign country. The filing of a U.S. patent application serves as a request for a foreign filing license. The application's filing receipt contains further information and guidance as to the status of applicant's license for foreign filing.

Applicants may wish to consult the USPTO booklet, "General Information Concerning Patents" (specifically, the section entitled "Treaties and Foreign Patents") for more information on timeframes and deadlines for filing foreign patent applications. The guide is available either by contacting the USPTO Contact Center at 800-786-9199, or it can be viewed on the USPTO website at http://www.uspto.gov/web/offices/pac/doc/general/index.html.

For information on preventing theft of your intellectual property (patents, trademarks and copyrights), you may wish to consult the U.S. Government website, http://www.stopfakes.gov. Part of a Department of Commerce initiative, this website includes self-help "toolkits" giving innovators guidance on how to protect intellectual property in specific countries such as China, Korea and Mexico. For questions regarding patent enforcement issues, applicants may call the U.S. Government hotline at 1-866-999-HALT (1-866-999-4158).

LICENSE FOR FOREIGN FILING UNDER
Title 35, United States Code, Section 184
Title 37, Code of Federal Regulations, 5.11 & 5.15

GRANTED

The applicant has been granted a license under 35 U.S.C. 184, if the phrase "IF REQUIRED, FOREIGN FILING LICENSE GRANTED" followed by a date appears on this form. Such licenses are issued in all applications where the conditions for issuance of a license have been met, regardless of whether or not a license may be required as set forth in 37 CFR 5.15. The scope and limitations of this license are set forth in 37 CFR 5.15(a) unless an earlier license has been issued under 37 CFR 5.15(b). The license is subject to revocation upon written notification. The date indicated is the effective date of the license, unless an earlier license of similar scope has been granted under 37 CFR 5.13 or 5.14.

This license is to be retained by the licensee and may be used at any time on or after the effective date thereof

unless it is revoked. This license is automatically transferred to any related applications(s) filed under 37 CFR 1.53(d). This license is not retroactive.

The grant of a license does not in any way lessen the responsibility of a licensee for the security of the subject matter as imposed by any Government contract or the provisions of existing laws relating to espionage and the national security or the export of technical data. Licensees should apprise themselves of current regulations especially with respect to certain countries, of other agencies, particularly the Office of Defense Trade Controls, Department of State (with respect to Arms, Munitions and Implements of War (22 CFR 121-128)); the Bureau of Industry and Security, Department of Commerce (15 CFR parts 730-774); the Office of Foreign Assets Control, Department of Treasury (31 CFR Parts 500+) and the Department of Energy.

NOT GRANTED

No license under 35 U.S.C. 184 has been granted at this time, if the phrase "IF REQUIRED, FOREIGN FILING LICENSE GRANTED" DOES NOT appear on this form. Applicant may still petition for a license under 37 CFR 5.12, if a license is desired before the expiration of 6 months from the filing date of the application. If 6 months has lapsed from the filing date of this application and the licensee has not received any indication of a secrecy order under 35 U.S.C. 181, the licensee may foreign file the application pursuant to 37 CFR 5.15(b).

UNITED STATES PATENT AND TRADEMARK OFFICE

Commissioner for Patents
United States Patent and Trademark Office
P.O. Box 1450
Alexandria, VA 22313-1450
www.uspto.gov

COATS & BENNETT, PLLC
1400 CRESCENT GREEN, SUITE 300
CARY, NC 27518

COPY MAILED

APR 0 8 2009

OFFICE OF PETITIONS

In re Application of :
Vibhor Julka, et al. :
Application No. 10/672,233 : ON PETITION
Filed: September 25, 2003 :
Attorney Docket No. 4740-223 :

This is a decision on the petition, filed February 4, 2009, to revive the above-identified application under the provisions of 37 CFR 1.137(b).

The petition is **GRANTED**.

The application became abandoned as a result of petitioner's failure to file an appeal brief (and fee required by 37 CFR 41.20(b)(2)) within the time period provided in 37 CFR 41.37(a)(1). As an appeal brief (and appeal brief fee) was not filed within two (2) months of the Notice of Appeal filed June 25, 2008, and no extensions of time under the provisions of 37 CFR 1.136(a) were obtained, the appeal was dismissed and the proceedings as to the rejected claims were terminated. See 37 CFR 1.197(b). As no claim was allowed, the application became abandoned on August 26, 2008. *See* MPEP 1215.04. This decision precedes the mailing of a Notice of Abandonment. On February 4, 2009, the present petition was filed.

The petition is not signed by a registered patent attorney or patent agent of record. However, in accordance with 37 CFR 1.34, the signature of Mr. Michael D. Murphy appearing on the correspondence shall constitute a representation to the United States Patent and Trademark Office that he is authorized to represent the particular party on whose behalf he acts.

The petition satisfies the requirements of 37 CFR 1.137(b) in that petitioner has supplied (1) the reply in the form of the Appeal Brief and requisite fee; (2) the petition fee of $1,620; and (3) an adequate statement of unintentional delay[1].

[1] 37 CFR 1.137(b)(3) requires a statement that the entire delay in filing the required reply from the due date for the reply until the filing of a grantable petition pursuant to 37 CFR 1.137(b) was unintentional. While the statement is not made by an attorney of record, such statement is being treated as having been made as the result of a reasonable inquiry into the facts and circumstances of such delay. See 37 CFR 10.18(b) and Changes to Patent Practice and Procedure; Final Rule Notice, 62 Fed. Reg. 53131, 53178 (October 10, 1997), 1203 Off. Gaz. Pat. Office 63, 103 (October 21, 1997). In the event that such an inquiry has not been made, petitioner must make such an inquiry. If such inquiry results in the discovery that it is not correct that the entire delay in filing the required reply from the due date for the reply until the filing of a grantable petition pursuant to 37 CFR 1.137(b) was unintentional, petitioner must notify the Office.

The application is being referred to Technology Center AU 2617.

Telephone inquiries concerning this decision may be directed to the undersigned at (571) 272-3204. Inquiries relating to the prosecution of the application should be referred to the Technology Center.

Sherry D. Brinkley
Petitions Examiner
Office of Petitions

UNITED STATES PATENT AND TRADEMARK OFFICE

Commissioner for Patents
United States Patent and Trademark Office
P.O. Box 1450
Alexandria, VA 22313-1450
www.uspto.gov

DUFT BORNSEN & FISHMAN, LLP
1526 SPRUCE STREET
SUITE 302
BOULDER CO 80302

COPY MAILED

MAY 05 2008

OFFICE OF PETITIONS

In re Application of	:	
Czyszcewski et al.	:	
Application No. 10/672,234	:	DECISION ON PETITION
Filed: September 25, 2003	:	
Attorney Docket No. BLD920030023US1	:	

This is a decision on the petition under the unintentional provisions of 37 CFR 1.137(b), filed April 8, 2008, to revive the above-identified application.

The petition is **GRANTED**.

The petition satisfies the requirements of 37 CFR 1.137(b) in that petitioner has supplied (1) the reply in the form of the Issue Fee Transmittal with payment of the issue and publication fees, (2) the petition fee, and (3) a proper statement of unintentional delay.

It is not apparent whether the statement of unintentional delay was signed by a person who would have been in a position of knowing that the entire delay in filing the required reply from the due date for the reply until the filing of a grantable petition pursuant to 37 CFR 1.137(b) was unintentional. Nevertheless, in accordance with 37 CFR 10.18, the statement is accepted as constituting a certification of unintentional delay. However, in the event that petitioner has no knowledge that the delay was unintentional, petitioner must make such an inquiry to ascertain that, in fact, the delay was unintentional. If petitioner discovers that the delay was intentional, petitioner must notify the Office.

Telephone inquiries concerning this decision should be directed to the undersigned at (571) 272-3206.

This matter is being referred to the Office of Data Management for processing into a patent.

Liana Walsh
Petitions Examiner
Office of Petitions

UNITED STATES PATENT AND TRADEMARK OFFICE

Commissioner for Patents
United States Patent and Trademark Office
P.O. Box 1450
Alexandria, VA 22313-1450
www.uspto.gov

HELLER EHRMAN LLP
4350 LA JOLLA VILLAGE DRIVE #700
7TH FLOOR
SAN DIEGO CA 92122

COPY MAILED

JAN 2 3 2006

OFFICE OF PETITIONS

In re Application of	:	
Darst, Daniel	:	
Application No. 10/672,239	:	ON PETITION
Filed: September 25, 2003	:	
Attorney Docket No. 40070-0360	:	

This is a decision on the petition under 37 CFR §1.102(d), filed November 25, 2005 to make the above-identified application special.

The petition requests that the above-identified application be made special under the accelerated examination procedure set forth in M.P.E.P. § 708.02, Section II: Infringement.

The petition is **GRANTED.**

A grantable petition to make an application special under 37 CFR §1.102(d) and MPEP §708.02, Section II: Infringement, must be accompanied by the required fee pursuant to 37 CFR 1.17(h) and a statement by the applicant, assignee, or attorney/agent registered to practice before the office alleging:

> (A) That there is an infringing device or product actually on the market or method in use;
>
> (B) That a rigid comparison of the alleged infringing device, product, or method with the claims of the application has been made, and that, in his or her opinion, some of the claims are unquestionably infringed; and
>
> (C) That he or she has made or caused to be made a careful and thorough search of the prior art or has a good knowledge of the pertinent prior art.
>
> Applicant must provide one copy of each of the references deemed most closely related to the subject matter encompassed by the claims if said references are not already of record.

The petition complies with all the above stated requirements. Accordingly, the above-identified application has been accorded "special" status

Telephone inquires concerning this decision should be directed to Paralegal Liana Chase at (571) 272-3206. All other inquires concerning either the examination or status of the application should be directed to the Technology Center.

This matter is being referred to the Technology Center Art Unit 3724 for expedited prosecution.

David Bucci for
Petitions Examiner
Office of Petitions

UNITED STATES PATENT AND TRADEMARK OFFICE

UNITED STATES DEPARTMENT OF COMMERCE
United States Patent and Trademark Office
Address: COMMISSIONER FOR PATENTS
P.O. Box 1450
Alexandria, Virginia 22313-1450
www.uspto.gov

KLARQUIST SPARKMAN, LLP
121 SW SALMON STREET
SUITE 1600
PORTLAND, OR 97204

Mail Date: 04/21/2010

Applicant	: Mark Korsten	: DECISION ON REQUEST FOR
Patent Number	: 7635709	: RECALCULATION of PATENT
Issue Date	: 12/22/2009	: TERM ADJUSTMENT IN VIEW
Appliction No	: 10/672,241	: OF WYETH AND NOTICE OF INTENT TO
Filed	: 09/25/2003	: ISSUE CERTIFICATE OF CORRECTION
		:

The Request for Recalculation is **GRANTED** to the extent indicated.

The patent term adjustment has been determined to be **1218** days. The USPTO will *sua sponte* issue a certificate of correction reflecting the amount of PTA days determined by the recalculation.

Prior to the issuance of the certificate of correction, the USPTO will afford patentee an opportunity to be heard and request reconsideration. Accordingly, patentee has **one month or thirty (30) days**, whichever is longer, to file a request for reconsideration of this patent term adjustment calculation. See 35 U.S.C. 154(b)(3)(B)(ii) and 37 CFR 1.322(a)(4). No extensions of time will be granted under 37 CFR 1.136.

Patentee should use document code PET.OP if electronically filing a request for reconsideration of this patent term adjustment calculation. The patentee must also include the information required by 37 CFR 1.705(b)(2) and the fee required by 37 CFR 1.18(e). If patentee does not file a timely request for reconsideration of this patent term adjustment calculation including the information required by 37 CFR 1.705(b)(2) and the fee required by 37 CFR 1.18(e), the USPTO will issue a certificate of correction reflecting the PTA determination noted above.

Patentee should be aware that in order to preserve the right to review in the United States District Court for the District of Columbia of the USPTO patent term adjustment determination, patentee must ensure that he or she also take the steps required under 35 U.S.C. 154(b)(4)(A) in a timely manner. Nothing in the request for recalculation should be construed as providing an alternative time frame for commencing a civil action under 35 U.S.C. 154(b)(4)(A).

Any questions concerning this decision should be directed to the Office of Patent Legal Administration at 571-272-7702.

UNITED STATES PATENT AND TRADEMARK OFFICE

Commissioner for Patents
United States Patent and Trademark Office
P.O. Box 1450
Alexandria, VA 22313-1450
www.uspto.gov

PEARNE & GORDON LLP
1801 EAST 9TH STREET
SUITE 1200
CLEVELAND, OH 44114-3108

COPY MAILED

MAY 24 2005

OFFICE OF PETITIONS

In re Application of	:
Charles M. Milliren et al	:
Application No. 10/672,247	: DECISION GRANTING STATUS
Filed: September 26, 2003	: UNDER 37 CFR 1.47(A)
For: PROTECTIVE FORM WITH SKIN	:

This is in response to the petition under 37 CFR 1.47(a), filed January 12, 2004.

The petition is granted.

Petitioner has shown that the non-signing inventor has refused to join in the filing of the above-identified application.

The above-identified application and papers have been reviewed and found in compliance with 37 CFR 1.47(a). This application is hereby accorded Rule 1.47(a) status. As provided in Rule 1.47(c), this Office will forward notice of this application's filing to the non-signing inventor at the address given in the petition. Notice of the filing of this application will also be published in the Official Gazette.

Telephone inquiries regarding this decision should be directed to Petitions Examiner Karen Creasy at (571) 272-3208.

This matter is being referred to Technology Center AU 1771.

Karen Creasy for

Frances Hicks
Lead Petitions Examiner
Office of Petitions
Office of the Deputy Commissioner
for Patent Examination Policy

UNITED STATES PATENT AND TRADEMARK OFFICE

Commissioner for Patents
United States Patent and Trademark Office
P.O. Box 1450
Alexandria, VA 22313-1450
www.uspto.gov

SALIWANCHIK LLOYD & SALIWANCHIK
A PROFESSIONAL ASSOCIATION
PO BOX 142950
GAINESVILLE, FL 32614-2950

COPY MAILED

FEB 0 3 2006

OFFICE OF PETITIONS

In re Application of	:	
Yalpani, Manssur	:	DECISION ON PETITION
Application No. 10/672,257	:	TO WITHDRAW
Filed: September 26, 2003	:	FROM RECORD
Attorney Docket No. CRB-T103X	:	

This is a decision on the Request to Withdraw as attorney or agent of record under 37 C.F.R. § 1.36(b), filed September 22, 2005.

The request is **APPROVED**.

A grantable request to withdraw as attorney/agent of record must be signed by every attorney/agent seeking to withdraw or contain a clear indication that one attorney is signing on behalf of another/others. A request to withdraw will not be approved unless at least 30 (thirty) days would remain between the date of approval and the later of the expiration date of a time to file a response or the expiration date of the maximum time period which can be extended under 37 C.F.R. § 1.136(a).

The request was signed by David R. Saliwanchik on behalf of all attorneys of record who are associated with Customer Number 23557.

All attorneys/agents associated with the Customer Number 23557 have been withdrawn. Applicant is reminded that there is no attorney of record at this time.

The correspondence address of record has been changed and the new correspondence address is the address indicated below.

Telephone inquires concerning this decision should be directed to Petitions Examiner Liana Chase at (571) 272-3206. All other inquires concerning either the examination or status of the application should be directed to the Technology Center.

David Bucci
Petitions Examiner
Office of Petitions

Cc: MANSSUR YALPANI
6324 FERRIS SQUARE
SAN DIEGO, CA 92121

SPE RESPONSE FOR CERTIFICATE OF CORRECTION

Paper No.: _____

DATE : 4-19-06

TO SPE OF : ART UNIT 2631

SUBJECT : Request for Certificate of Correction for Appl. No.: 10/672259 Patent No.: 7003023

Please respond to this request for a certificate of correction within 7 days.

Please review the requested changes/corrections as shown in the **COCIN** document(s) in the IFW application image. No new matter should be introduced, nor should the scope or meaning of the claims be changed.

Check claims / Drawings

Please complete the response (see below) and forward the completed response to scanning using document code **COCX**.

Certificates of Correction Branch

703-308-9390 ext. _____

Thank You For Your Assistance

The request for issuing the above-identified correction(s) is hereby:

Note your decision on the appropriate box.

- ☑ **Approved** — All changes apply.
- ☐ **Approved in Part** — Specify below which changes **do not** apply.
- ☐ **Denied** — State the reasons for denial below.

Comments: Changes are approved

JAY K. PATEL
SUPERVISORY PATENT EXAMINER

SPE

2611
Art Unit

UNITED STATES PATENT AND TRADEMARK OFFICE

COMMISSIONER FOR PATENTS
UNITED STATES PATENT AND TRADEMARK OFFICE
P.O. BOX 1450
ALEXANDRIA, VA 22313-1450
www.uspto.go

Paper No.

CHOATE, HALL & STEWART
53 STATE STREET
EXCHANGE PLACE
BOSTON, MA 02109

COPY MAILED

MAR 17 2004

OFFICE OF PETITIONS

In re Application of	:	
Matsushita et al.	:	
Application No. 10/672,263	:	
Filed: September 26, 2003	:	ON PETITION
Attorney Docket No.	:	
SUM-02701	:	

This is a decision in response to the Petition to Correct Filing Date, filed January 22, 2004, which is properly treated under 37 CFR 1.10(c), requesting the application be accorded a filing date of September 26, 2003, instead of the presently accorded filing date of September 27, 2003.

This Petition is hereby **granted**.

Petitioner alleges that the application was deposited in Express Mail service on September 26, 2003. In support of the allegation, the petition is accompanied by a copy of Express Mail label No. EV325286041US. Although the "Date In" indicated on the Express Mail label is September 27, 2003, the Express Mail Label is properly addressed to the Commissioner for Patents, and the Express Mail label contains a United States Postal Service (USPS) stamp of September 26, 2003. The same Express Mail label number was placed on the original application papers located in the official file. Petitioner has also provided a copy of their mail log for September 26, 2003 which identifies the above-identified application as having been deposited express mail on September 26, 2003[1].

[1] Applicant is advised that under the provisions of 37 CFR 1.10(d), evidence of deposit to support an assertion to correct a filing date based upon express mailing must have come into being after deposit and within one business day of the putative deposit. In the instant petition, no such assertion has been made.

In view of the above, the petition is **granted**. No fee is necessary.

Telephone inquiries concerning this matter should be directed to Petitions Attorney Derek L. Woods at (703) 305-0014.

Derek L. Woods
Petitions Attorney
Office of Petitions

UNITED STATES PATENT AND TRADEMARK OFFICE

Commissioner for Patents
United States Patent and Trademark Office
P.O. Box 1450
Alexandria, VA 22313-1450
www.uspto.gov

NAVAL RESEARCH LABORATORY
ASSOCIATE COUNSEL (PATENTS)
CODE 1008.2
4555 OVERLOOK AVENUE, S.W.
WASHINGTON, DC 20375-5320

COPY MAILED

JAN 2 5 2006

OFFICE OF PETITIONS

ON PETITION

In re Application of :
Eric J. Houser et al :
Application No. 10/672,272 :
Filed: September 26, 2003 :
Attorney Docket No. NC 95,784 :

This is a decision on the petition, filed February 28, 2005, to correct the spelling of one of the named inventor from Robert A. McGill to Robert Andrew McGill.

The petition is **DISMISSED**.

A petition under 37 CFR 1.182 requires a $400 petition fee.[1] The instant petition does not authorize the USPTO to charge the fee to a USPTO deposit account.

Further correspondence with respect to this matter should be addressed as follows:

By mail: Mail Stop PETITIONS
Commissioner for Patents
Post Office Box 1450
Alexandria, VA 22313-1450

By hand: Customer Service Window
Randolph Building
401 Dulany street
Alexandria, VA 22314

By fax: (571) 273-8300
ATTN: Office of Petitions

Telephone inquiries related to this decision should be directed to Wan Laymon at (571) 272-3220.

Wan Laymon
Petitions Examiner
Office of Petitions

[1] MPEP 605.04

UNITED STATES PATENT and TRADEMARK OFFICE
UNDER SECRETARY OF COMMERCE FOR INTELLECTUAL PROPERTY AND
DIRECTOR OF THE UNITED STATES PATENT AND TRADEMARK OFFICE
WASHINGTON, D.C. 20231
WWW.USPTO.GOV

Mailed:

RPG

Paper No. ~~3/10/05~~ 1/10/06

Applicant: Houser et al. :
Serial No. 10/672,272 : DECISION ON PETITION
Filed: September 26, 2003 :
For: HYPERBRANCHED CHEMOSELECTIVE SILICON-BASED POLYMERS
FOR CHEMICAL SENSOR APPLICATIONS
:

This is a decision on the PETITION TO CORRECT INVENTORSHIP UNDER 37 C.F.R. 1.182, TREATED as a PETITION UNDER 37 CFR 1.48(a), filed October 31, 2005, to correct inventorship. It is noted that the patentee has not met the *highlighted* requirements of:

(1) A request to correct the inventorship that sets forth the desired inventorship change;

(2) A statement from each person being added/deleted/changed as an inventor that the error in inventorship occurred without deceptive intention on his or her part;

(3) An oath or declaration by the actual inventor or inventors as required by § 1.63 or as permitted by §§ 1.42, 1.43 or § 1.47;

(4) The processing fee set forth in § 1.17(i); and

(5) If an assignment has been executed by any of the original named inventors, the written consent of the assignee (see § 3.73(b) of this chapter).

The petition is **DENIED**.

Randy Gulakowski
Supervisory Patent Examiner
Art Unit 1712
Technology Center 1700
Chemical Materials & Engineering

Naval Research Laboratory Associate Counsel (Patents)
Code 1008.2
4555 Overlook Avenue, S.W.
Washington, DC 20375-5320

UNITED STATES PATENT AND TRADEMARK OFFICE

Commissioner for Patents
United States Patent and Trademark Office
P.O. Box 1450
Alexandria, VA 22313-1450
www.uspto.gov
DIW 03-05

HELLER EHRMAN WHITE & MCAULIFFE LLP
1717 RHODE ISLAND AVE, NW
WASHINGTON DC 20036-3001

COPY MAILED

MAR 1 5 2005

OFFICE OF PETITIONS

In re Application of	:
Goldenberg, Hansen, and Leung	:
Application No. 10/672,278	: DECISION ACCORDING STATUS
Filed: 29 September, 2003	: UNDER 37 CFR 1.47(a)
Attorney Docket No. 40923-0134US1	:

This is in response to the petition filed under 37 CFR 1.47(a) on 9 February, 2005.

The petition is **DISMISSED**.

Rule 47 applicant is given TWO MONTHS from the mailing date of this decision to reply, correcting the below-noted deficiencies. Any reply should be entitled "Request for Reconsideration of Petition Under 37 CFR 1.47(a)," and should only address the deficiencies noted below, except that the reply may include an oath or declaration executed by the non-signing inventor. **FAILURE TO RESPOND WILL RESULT IN ABANDONMENT OF THE APPLICATION.** Extensions of time may be obtained in accordance with 37 CFR 1.136(a).

The above-identified application was filed on 29 September, 2003, without an executed oath or declaration. Accordingly, on 22 December, 2003, Initial Patent Examination Division mailed a Notice to File Missing Parts of Nonprovisional Application, requiring the statutory basic filing fee, additional claim fees, an executed oath or declaration, a surcharge for their late filing, replacement drawings in compliance with 37 CFR 1.84 and 1.121, and sequence listing in compliance with 37 CFR 1.821-1.825. In response, on 21 May, 2004, petitioners filed a three month extension of time, accompanied by petitioners filed replacement drawings, a corrected sequence listing, the statutory

basic filing fee and additional claim fees, and surcharge and a declaration naming David M. Goldenberg, Hans J. Hansen, and Shui-on Leung as joint inventors and signed by joint inventors Goldenberg and Hansen on behalf of themselves and joint inventor Leung.

Accordingly, on 9 July, 2004, Initial Patent Examination Division mailed a Notice to File Missing Parts of Nonprovisional Application, requiring the signature of joint inventor Leung on the declaration. In response, on 9 February, 2005, petitioners filed a five (5) month extension of time, the present petition, and petition fee.

Petitioners assert that a copy of the declaration was sent to the non-signing inventor via his counsel. However, the non-signing inventor himself sent a letter on 8 November, 2004, stating that he required payment and another copy of the application.

A grantable petition under 37 CFR 1.47(a) requires:

(1) proof that the non-signing inventor cannot be reached or located, notwithstanding diligent effort, or refuses to sign the oath or declaration after having been presented with the application papers (specification, claims and drawings);
(2) an acceptable oath or declaration in compliance with 35 U.S.C. §§ 115 and 116;
(3) the petition fee;
(4) a surcharge of $130 or $65 (small entity) if the petition and/or declaration is not filed at the time of filing the application, and
(5) a statement of the last known address of the non-signing inventor.

The petition lacks item (2). In regards to item (2), the declaration filed on 21 May, 2004, is defective in that it does not list the residence for any of the inventors.[1] Petitioners must provide a supplemental declaration signed by all of the signing inventors on behalf of themselves and the non-signing

---

[1]MPEP 605.02 Applicant's Residence
Applicant's place of residence, that is, the city and either state or foreign country, is required to be included in the oath or declaration in a nonprovisional application for compliance with 37 CFR 1.63 unless it is included in an application data sheet (37 CFR 1.76). In the case of an applicant who is in one of the U.S. Armed Services, a statement to that effect is sufficient as to residence. For change of residence, see MPEP § 719.02(b). Applicant's residence must be included on the cover sheet for a provisional application unless it is included in an application data sheet (37 CFR 1.76). Id.

inventor. A new oath or declaration in compliance with 37 CFR 1.63 and 1.67, listing the residence, mailing address, and citizenship of all of the inventors and signed by the signing inventors on behalf of themselves and the non-signing inventors must be provided with any renewed petition.

Further correspondence with respect to this matter should be addressed as follows:

By mail: Mail Stop Petition
Commissioner for Patents
P.O. Box 1450
Alexandria, VA 22313-1450

By FAX: (703) 872-9306
Attn: Office of Petitions

By hand: Customer Service Window
Mail Stop Petition
Randolph Building
401 Dulany Street
Alexandria, VA 22314

Telephone inquiries related to this decision should be directed to the undersigned at 571-272-3231.

DWood

Douglas I. Wood
Senior Petitions Attorney
Office of Petitions

UNITED STATES PATENT AND TRADEMARK OFFICE

Commissioner for Patents
United States Patent and Trademark Office
P.O. Box 1450
Alexandria, VA 22313-1450
www.uspto.gov
DIW Aug-06

HELLER EHRMAN WHITE & MCAULIFFE LLP
1717 RHODE ISLAND AVE, NW
WASHINGTON DC 20036-3001

COPY MAILED

AUG 15 2006

OFFICE OF PETITIONS

In re Application of	:
Goldenberg, Hansen, and Leung	: DECISION REFUSING STATUS
Application No. 10/672,278	: UNDER 37 CFR 1.47(a)
Filed: 29 September, 2003	:
Atty Docket No. 40923-0134US1	:

This is in response to the renewed petition under 37 CFR 1.47(a) filed on 11 May, 2005.

The Office apologizes for the delay in responding to the present petition and regrets any inconvenience to petitioners.

The petition is **DISMISSED**.

Rule 47 applicant is given TWO MONTHS from the mailing date of this decision to reply, correcting the below-noted deficiencies. Any reply should be entitled "Request for Reconsideration of Petition Under 37 CFR 1.47(a)," and should only address the deficiencies noted below, except that the reply may include an oath or declaration executed by the non-signing inventor. **FAILURE TO RESPOND WILL RESULT IN ABANDONMENT OF THE APPLICATION.** Extensions of time may be obtained in accordance with 37 CFR 1.136(a).

The above-identified application was filed on 29 September, 2003, without an executed oath or declaration. Accordingly, on 22 December, 2003, Initial Patent Examination Division mailed a Notice to File Missing Parts of Nonprovisional Application, requiring the statutory basic filing fee, additional claim fees, an executed oath or declaration, a surcharge for their late filing, replacement drawings in compliance with 37 CFR 1.84 and 1.121, and sequence listing in compliance with 37 CFR 1.821-1.825. In response, on 21 May, 2004, petitioners filed a three

month extension of time, accompanied by replacement drawings, a corrected sequence listing, the statutory basic filing fee and additional claim fees, and surcharge and a declaration naming David M. Goldenberg, Hans J. Hansen, and Shui-on Leung as joint inventors and signed by joint inventors Goldenberg and Hansen on behalf of themselves and joint inventor Leung.

Accordingly, on 9 July, 2004, Initial Patent Examination Division mailed a Notice to File Missing Parts of Nonprovisional Application, requiring the signature of joint inventor Leung on the declaration. In response, on 9 February, 2005, petitioners filed a five (5) month extension of time, petition, and petition fee.

The petition was dismissed on 15 March, 2005, for failure to provide the residence of the inventors on the declaration. A new declaration listing the residence, citizenship, and mailing address of all of the inventors, signed by the signing inventors on behalf of themselves and the non-signing inventors was required.

The present renewed petition is accompanied by a declaration listing the residence, citizenship, and mailing address of all of the inventors, signed by joint inventor Hansen.

A grantable petition under 37 CFR 1.47(a) requires:

(1) proof that the non-signing inventor cannot be reached or located, notwithstanding diligent effort, or refuses to sign the oath or declaration after having been presented with the application papers (specification, claims and drawings);
(2) an acceptable oath or declaration in compliance with 35 U.S.C. §§ 115 and 116;
(3) the petition fee;
(4) a surcharge of $130 or $65 (small entity) if the petition and/or declaration is not filed at the time of filing the application, and
(5) a statement of the last known address of the non-signing inventor.

The petition lacks item (2). The declaration filed with the renewed petition on 11 May, 2005, is defective in that it has not been signed by **all** of the signing inventors on behalf of themselves and the non-signing inventor. Specifically, previously signing inventor Goldenberg must sign the supplemental declaration on behalf of himself and non-signing joint inventor Leung.

The revocation and power of attorney filed on 24 April, 2006, cannot be accepted because the assignment document listed on the statement under 37 CFR 3.73(b), Reel 017429, Frame 0147, does not list all of the assignors (inventors). Rather, it is simply a copy of an employment agreement signed by non-signing inventor Leung.

MPEP 402.07 states, in pertinent part:

> In an application that has been accorded status under 37 CFR 1.47(a), or for which status under 37 CFR 1.47(a) has been requested, a power of attorney given by the inventors who have signed the declaration (available inventors) may be revoked by an assignee of the entire interest of the available inventors (i.e., the applicant). *See* 37 CFR 1.32(b)(4). Rights of the assignee to take action may be established as provided in 37 CFR 3.73(b) and MPEP § 324.

As such, upon the granting of a renewed petition under 37 CFR 1.47(a), a new power of attorney by the inventors or applicant should be submitted.

A copy of this decision is being forwarded to the address listed in the paper filed on 24 April, 2006. All future correspondence will be sent solely to the address of record.

Further correspondence with respect to this matter should be addressed as follows:

By mail: Mail Stop Petition
Commissioner for Patents
P.O. Box 1450
Alexandria, VA 22313-1450

By FAX: (571) 273-8300
Attn: Office of Petitions

By hand: Customer Service Window
Mail Stop Petition
Randolph Building
401 Dulany Street
Alexandria, VA 22314

Telephone inquiries related to this decision should be directed to the undersigned at 571-272-3231.

Douglas I. Wood
Senior Petitions Attorney
Office of Petitions

cc: FAEGRE & BENSON LLP
PATENT DOCKETING
2200 WELLS FARGO CENTER
90 SOUTH 7TH STREET
MINNEAPOLIS MN 55402-3901

UNITED STATES PATENT AND TRADEMARK OFFICE

Commissioner for Patents
United States Patent and Trademark Office
P.O. Box 1450
Alexandria, VA 22313-1450
www.uspto.gov
DIW Nov-06

HELLER EHRMAN WHITE & MCAULIFFE LLP
1717 RHODE ISLAND AVE, NW
WASHINGTON DC 20036-3001

COPY MAILED
NOV 09 2006
OFFICE OF PETITIONS

In re Application of	:
Goldenberg, Hansen, and Leung	: DECISION ACCORDING STATUS
Application No. 10/672,278	: UNDER 37 CFR 1.47(a)
Filed: 29 September, 2003	:
Atty Docket No. 40923-0134US1	:

This is in response to the petition under 37 CFR 1.47(a) filed on 1 September, 2006.

The petition is **GRANTED**.

Petitioners have shown that the non-signing inventor, Shui-on Leung, has refused to sign the declaration for after having been sent a copy of the application via his counsel. Specifically, petitioners have shown that a copy of the application was sent to the non-signing inventor's attorney. The non-signing inventor, however, has failed to sign and return the declaration naming him as a joint inventor along with David M. Goldenberg and Hans J. Hansen.

The above-identified application and papers have been reviewed and found in compliance with 37 CFR 1.47(a). This application is hereby accorded Rule 1.47(a) status.

As provided in Rule 1.47(c), this Office will forward notice of this application's filing to the non-signing inventor at the address given in the declaration filed on 1 September, 2006. Notice of the filing of this application will also be published in the *Official Gazette*.

The address in the petition is different than the correspondence address. A copy of this decision will be mailed to the address listed in the petition. All future correspondence, however, will be mailed solely to the address of record.

The application is being referred to the Office of Initial Patent Examination for further processing.

Telephone inquiries related to this decision should be directed to the undersigned at 571-272-3231.

D Wood

Douglas I. Wood
Senior Petitions Attorney
Office of Petitions

cc: HELLER, EHRMAN, WHITE & MCAULIFFE
1666 K STREET, NW, SUITE 300
WASHINGTON DC 20006

UNITED STATES PATENT AND TRADEMARK OFFICE

Commissioner for Patents
United States Patent and Trademark Office
P.O. Box 1450
Alexandria, VA 22313-1450
www.uspto.gov
DIW Nov-06

Shui-on Leung
2 Biotechnology Avenue, 12 Miles
Tai Po Road, Shatin, NT
HONG KONG

COPY MAILED
NOV 0 9 2006
OFFICE OF PETITIONS

In re Application of
Goldenberg et al.
Application No. 10/672,278
Filed: 29 September, 2003
For: CHIMERIC, HUMAN AND HUMANIZED ANTI-GRANULOCYTE ANTIBODIES AND METHODS OF USE

Dear Mr. Leung:

You are named as a joint inventor in the above identified United States patent application, filed under the provisions of 35 U.S.C. 116 (United States Code), and 37 CFR 1.47(a), Rules of Practice in Patent Cases. Should a patent be granted on the application you will be designated therein as a joint inventor.

As a named inventor you are entitled to inspect any paper in the file wrapper of the application, order copies of all or any part thereof (at a prepaid cost per 37 CFR 1.19) or make your position of record in the application. Alternatively, you may arrange to do any of the preceding through a registered patent attorney or agent presenting written authorization from you. If you care to join the application, counsel of record (see below) would presumably assist you. Joining in the application would entail the filing of an appropriate oath or declaration by you pursuant to 37 CFR 1.63.

Telephone inquiries regarding this communication should be directed to the undersigned at 571/272-3231. Requests for information regarding your application should be directed to the File Information Unit at 571-272-3150. Information regarding how to pay for and order a copy of the application, or a specific paper in the application, should be directed to Certification Division at 571-272-3150 or 1-800-972-6382 (outside the Washington D.C. area).

DIWood

Douglas I. Wood
Senior Petitions Attorney
Office of Petitions

HELLER EHRMAN WHITE & MCAULIFFE
1717 RHODE ISLAND AVENUE, N.W.
WASHINGTON DC 20036-3001

SPE RESPONSE FOR CERTIFICATE OF CORRECTION

Paper No.: ____

DATE : 1/10/07

TO SPE OF : ART UNIT 2877

SUBJECT : Request for Certificate of Correction for Appl. No.: 10/672298 Patent No.: 7061625 B1

Please respond to this request for a certificate of correction within 7 days.

Please review the requested changes/corrections as shown in the **COCIN** document(s) in the IFW application image. No new matter should be introduced, nor should the scope or meaning of the claims be changed.

Please complete the response (see below) and forward the completed response to scanning using document code **COCX**.

Virginia Tolbert
Certificates of Correction Branch

703-308-9390 ext. 113

Thank You For Your Assistance

The request for issuing the above-identified correction(s) is hereby:
Note your decision on the appropriate box.

- ☒ **Approved** — **All** changes apply.
- ☐ **Approved in Part** — Specify below which changes **do not** apply.
- ☐ **Denied** — State the reasons for denial below.

Comments: _____

Gregory J, Toatley, Jr.
Supervisory Patent Examiner
1/24/07

SPE

2877
Art Unit

UNITED STATES PATENT AND TRADEMARK OFFICE

Commissioner for Patents
United States Patent and Trademark Office
P.O. Box 1450
Alexandria, VA 22313-1450
www.uspto.gov

COPY MAILED

OCT 17 2006

OFFICE OF PETITIONS

F. CHAU & ASSOCIATES, LLC
130 WOODBURY ROAD
WOODBURY NY 11797

In re Application of	:	
Young-Je Cho et al	:	
Application No. 10/672,304	:	ON PETITION
Filed: September 26, 2003	:	
Attorney Docket No. 8071-47 (OPP 030615 US)	:	

This is a decision on the petition, filed October 10, 2006, under 37 CFR 1.313(c)(2) to withdraw the above-identified application from issue after payment of the issue fee.

The petition is **GRANTED**.

The above-identified application is withdrawn from issue for consideration of a submission under 37 CFR 1.114 (request for continued examination). See 37 CFR 1.313(c)(2).

Petitioner is advised that the issue fee paid on June 16, 2006, in the above-identified application cannot be refunded. If, however, the above-identified application is again allowed, petitioner may request that it be applied towards the issue fee required by the new Notice of Allowance.[1]

Telephone inquiries should be directed to the undersigned at (571) 272-3208.

The examiner of Technology Center AU 2871 will consider the request for continued examination under 37 CFR 1.114.

Karen Creasy

Karen Creasy
Petitions Examiner
Office of Petitions

---

[1] The request to apply the issue fee to the new Notice may be satisfied by completing and returning the new Issue Fee Transmittal Form PTOL-85(b), which includes the following language thereon: "Commissioner for Patents is requested to apply the Issue Fee and Publication Fee (if any) or re-apply any previously paid issue fee to the application identified above." Petitioner is advised that, whether a fee is indicated as being due or not, the Issue Fee Transmittal Form **must** be completed and timely submitted to avoid abandonment. Note the language in bold text on the first page of the Notice of Allowance and Fee(s) Due (PTOL-85).

UNITED STATES PATENT AND TRADEMARK OFFICE

Commissioner for Patents
United States Patent and Trademark Office
P.O. Box 1450
Alexandria, VA 22313-1450
www.uspto.gov

BEYER WEAVER LLP
P.O. BOX 70250
OAKLAND CA 94612-0250

COPY MAILED

MAR 19 2007

OFFICE OF PETITIONS

In re Application of
Tipton et al.
Application No. 10/672,311
Filed: September 26, 2003
Attorney Docket No. NOVLP075/NVLS-000820

DECISION ON PETITION
UNDER 37 CFR 1.78(a)(6)

This is a decision on the petition under 37 CFR 1.78(a)(6), filed July 10, 2006, to accept an unintentionally delayed claim under 35 U.S.C. § 119(e) for the benefit of priority to a prior-filed provisional application.

The petition is **DISMISSED.**

A petition under 37 CFR 1.78(a)(6) is only applicable to those applications filed on or after November 29, 2000. Further, the petition is appropriate only after expiration of the period specified in 37 CFR 1.78(a)(5)(ii) and must be filed during the pendency of the nonprovisional application. In addition, the petition must be accompanied by:

(1) the reference required by 35 U.S.C. § 119(e) and 37 CFR 1.78(a)(5)(i) to the prior-filed application, unless previously submitted;
(2) the surcharge set forth in § 1.17(t); and
(3) a statement that the entire delay between the date the claim was due under 37 CFR 1.78(a)(5)(ii) and the date the claim was filed was unintentional. The Director may require additional information where there is a question whether the delay was unintentional.

This pending nonprovisional application was filed on September 26, 2003, within twelve months of the filing date of the prior-filed provisional application, Application No. 60/469,433 which was filed on May 9, 2003 and for which priority is claimed.

The amendment as drafted is unacceptable and, therefore, is not considered a proper reference under 37 CFR 1.78(a)(2)(i). In this regard, the amendment is physically part of the petition and, as such, does not comply with 37 CFR 1.121, 1.52, or 1.4(c). Note that 37 CFR 1.121 states that amendments are made by filing a paper, in compliance with § 1.52, directing that specified amendments be made. The pertinent section of 37 CFR 1.52 states that the claim (in this case, the claim for priority), must commence on a separate physical sheet. 37 CFR 1.4(c) states that

each distinct subject must be contained in a separate paper since different matters may be considered by different branches of the United States Patent and Trademark Office.

Further, the amendment is not acceptable as drafted since it improperly incorporates by reference the prior-filed application. An incorporation by reference statement added after an application's filing date is not effective because no new matter can be added to an application after its filing date (*see* 35 U.S.C. § 132(a)). If an incorporation by reference statement is included in an amendment to the specification to add a benefit claim under 35 U.S.C. § 120 after the filing date of the application, the amendment would not be proper. When a benefit claim under 35 U.S.C. § 120 is submitted after the filing of an application, the reference to the prior application cannot include an incorporation by reference statement of the prior application. *See* Dart Industries v. Banner, 636 F.2d 684, 207 USPQ 273 (C.A.D.C. 1980). *Note* MPEP §§ 201.06(c) and 608.04(b).

Accordingly, before the petition under 37 CFR 1.78(a)(6) can be granted, a renewed petition under 37 CFR 1.78(a)(6) and either an Application Data Sheet or a substitute amendment (complying with 37 CFR 1.121 and 37 CFR 1.76(b)(5)) deleting the incorporation by reference statement, are required.

Further correspondence with respect to this matter should be addressed as follows:

By mail: Mail Stop PETITIONS
Commissioner for Patents
Post Office Box 1450
Alexandria, VA 22313-1450

By hand: Customer Service Window
Mail Stop Petitions
Randolph Building
401 Dulany Street
Alexandria, VA 22314

By fax: (571) 273-8300
ATTN: Office of Petitions

Any questions concerning this matter may be directed to Charlema Grant at (571) 272-3215.

Nancy Johnson for

Frances Hicks
Petitions Examiner
Office of Petitions

UNITED STATES PATENT AND TRADEMARK OFFICE

COMMISSIONER FOR PATENTS
UNITED STATES PATENT AND TRADEMARK OFFICE
P.O. BOX 1450
ALEXANDRIA, VA 22313-1450
www.uspto.gov

COPY MAILED

AUG 17 2007

OFFICE OF PETITIONS

BEYER WEAVER LLP
P.O. BOX 70250
OAKLAND CA 94612-0250

In re Patent No. 7,208,389	:	
Issue Date: April 24, 2007	:	
Application No. 10/672,311	:	DECISION ON PETITIONS
Filed: September 26, 2003	:	UNDER 37 CFR 1.78(a)(6)
Attorney Docket No. NOVLP075/NVLS-000820	:	

This is a decision on the renewed petition under 37 CFR §1.78(a)(6), filed April 6, 2007, to accept an unintentionally delayed claim under 35 U.S.C. §119(e) for benefit of priority to the provisional application set forth in the concurrently filed amendment. It is noted that the statement in the amendment that the application is related to application No. 10/672,305 is not a claim for the benefit of priority to that application and thus, has not been considered as a delayed claim under 37 CFR § 1.78(a)(3).

The petition is **GRANTED.**

A petition under 37 CFR 1.78(a)(6) is only applicable to those applications filed on or after November 29, 2000. Further, the petition is appropriate only after expiration of the period specified in 37 CFR 1.78(a)(5)(ii) and must be filed during the pendency of the nonprovisional application. In addition, the petition must be accompanied by:

(1) the reference required by 35 U.S.C. § 119(e) and 37 CFR 1.78(a)(5)(i) to the prior-filed application, unless previously submitted;
(2) the surcharge set forth in § 1.17(t); and
(3) a statement that the entire delay between the date the claim was due under 37 CFR 1.78(a)(5)(ii) and the date the claim was filed was unintentional. The Director may require additional information where there is a question whether the delay was unintentional.

Additionally, the instant nonprovisional application must be pending at the time of filing of the reference to the prior-filed provisional application as required by 37 CFR 1.78(a)(5)(ii). Further, the nonprovisional application claiming the benefit of the prior-filed provisional application must have been filed within twelve months of the filing date of the prior-filed provisional application.

All of the above requirements having been satisfied, the late claim for priority under 35 U.S.C. § 119(e) is accepted as being unintentionally delayed.

The application issued into a patent on April 24, 2007. A review of the record shows a certificate of correction is not necessary as the patent issued with the claim for benefit of priority to provisional application No. 60/469,433.

A determination of whether the applicant is entitled to claim benefit of the prior-filed application is made by the Examiner. This decision is limited to the issue of accepting the unintentionally delayed claim and does not address entitlement to the benefit of priority. As such, this decision is not a determination on whether the patent properly issued with the claim for priority under 35 U.S.C. § 119(e) to provisional application No. 60/469,433.

Any questions concerning this decision on petition may be directed to Charlema Grant at (571) 272-3215.

Nancy Johnson

Nancy Johnson
Senior Petitions Attorney
Office of Petitions

UNITED STATES PATENT AND TRADEMARK OFFICE

Commissioner for Patents
United States Patent and Trademark Office
P.O. Box 1450
Alexandria, VA 22313-1450
www.uspto.gov

MAY 23 2006

LEFFERT JAY & POLGLAZE, P.A.
P.O. BOX 581009
MINNEAPOLIS MN 55458-1009

In re Application of:	:	
ERIC J. ERFOURTH	:	
Application No. 10/672,313	:	DECISION ON PETITION
Filed: September 26, 2003	:	TO MAKE SPECIAL
Attorney Docket No. 3271.01US02	:	

This is a decision on the petition under 37 C.F.R. § 1.102, filed May 21, 2004, to make the above-identified application special.

Petitioner requests that the above-identified application be made special under the accelerated examination procedure set forth in the Manual of Patent Examining Procedure (M.P.E.P.) § 708.02, Section VI: Energy.

A grantable petition to make special under 37 C.F.R. § 1.102 and in accordance with M.P.E.P., Section 708.02, Item VI, must be accompanied by statements under 37 CFR 1.102 by the applicant, assignee, or an attorney/agent registered to practice before the Office explaining how the invention materially contributes to category (A) the discovery or development of energy resources, or (B) the more efficient utilization and conservation of energy resources. No fee is required for such a petition, 37 CFR 1.102(c).

The petition and accompanying declaration contains the required statement of how the invention materially contributes to the more efficient utilization and conservation of energy resources in accordance with M.P.E.P., Section 708.02, Item VI.

For the above stated reasons, the petition is GRANTED.

The application is being forwarded to the examiner for expedited prosecution.

If the examiner determines that restriction is necessary, he/she will follow the established telephone practice to resolve the restriction. If applicant elects with traverse the application will be forwarded to the Special Programs Examination unit to vacate this decision, and the application will be taken up by the examiner for action in its regular turn.

If the examiner can make this application special without prejudice to any possible interfering applications, and he/she should make a rigid search for such, he/she is authorized to do so for the next action. Should the application be rejected, the application will not be considered special for the subsequent action unless the applicant promptly makes a bona fide effort to place the application in condition for allowance, even if it is necessary to have an interview with the examiner to accomplish this purpose.

If the examiner finds any interfering application for the same subject matter, he/she should consider such application simultaneously with this application and should state in the official letter of such application that she/he is taking it out of its turn because of possible interference.

Should an appeal be taken in this application or should this application becomes involved in an interference, consideration of the appeal and the interference will be expedited by all Patent and Trademark Office officials concerned, contingent likewise upon diligent prosecution by the applicant.

After allowance, this application will be given priority for printing. See M.P.E.P. Section 1309.

Inquiries regarding this decision should be directed to Jose' G. Dees at (571) 272-1569.

Jose' G. Dees, Special Programs Examiner
Technology Center 2800
Semiconductors, Electrical and Optical
Systems and Components

UNITED STATES PATENT AND TRADEMARK OFFICE

Commissioner for Patents
United States Patent and Trademark Office
P.O. Box 1450
Alexandria, VA 22313-1450
www.uspto.gov

COPY MAILED
APR 03 2008
OFFICE OF PETITIONS

COCHRAN FREUND & YOUNG LLC
2026 CARIBOU DR
SUITE 201
FORT COLLINS, CO 80525

In re Application of :
Benjamin R. Mattes, et al. :
Application No. 10/672,323 : ON PETITION
Filed: September 26, 2003 :
Attorney Docket No. SFST.01USU1 :

This is a decision on the petition, filed December 18, 2007, to revive the above-identified application under 37 CFR 1.137(b).

The application became abandoned for a failure to reply in a timely manner to the final Office action mailed September 21, 2006. A Notice of Abandonment was mailed on June 22, 2007. In response, on December 18, 2007 a petition under 37 CFR 1.137(b) was filed, including a Notice of Appeal and fee. It is noted that an Appeal Brief under 37 CFR 41.37 (accompanied by the fee required by 37 CFR 41.20(b)(2)) was filed on February 13, 2008.

The petition is found to comply with the requirements of 37 CFR 1.137(b). Accordingly, the petition is **GRANTED.**

The application is being referred to Technology Center AU 1732.

Telephone inquiries concerning this decision may be directed to the undersigned at (571) 272-3204. Inquiries relating to the prosecution of the application should be referred to the Technology Center.

Sherry D. Brinkley
Petitions Examiner
Office of Petitions

UNITED STATES PATENT AND TRADEMARK OFFICE

Commissioner for Patents
United States Patent and Trademark Office
P.O. Box 1450
Alexandria, VA 22313-1450
www.uspto.gov

LERNER DAVID LITTENBERG
KRUMHOLZ & MENTLIK
600 SOUTH AVE WEST
WESTFIELD NJ 07090

COPY MAILED

JAN 19 2006

OFFICE OF PETITIONS

In re Application of	:	
Lance M. Middleton	:	
Application No. 10/672,327	:	ON PETITION
Filed: September 26, 2003	:	
Attorney Docket No. SPINE 3.0-2144 DIV II	:	

This is a decision on the paper titled "REQUEST FOR REINSTATEMENT", filed September 16, 2005, which is being treated as a petition under 37 CFR 1.181 to withdraw the holding of abandonment of the above identified application.

The petition is **GRANTED**.

This application was held abandoned for failure to timely reply to the final Office action mailed October 13, 2004. This Office action set a shortened statutory period for reply of three (3) months. On December 23, 2004, applicant filed an amendment. However, by Advisory Action mailed January 19, 2005, applicant was advised that the amendment did not place the application in condition for allowance. No further reply with an extension of time having been received, the application became abandoned on January 14, 2005. A Notice of Abandonment was mailed on August 23, 2005.

Petitioner contends that he did timely file a proper response, namely an RCE with a one month extension of time, on January 14, 2005. In support, petitioner has included a copy of a properly itemized postcard receipt, showing that a "Request for Continued Examination Transmittal (1 page)" and a "Petition for Extension of Time (1 month)" were filed on January 18, 2005.

A postcard receipt which itemizes and properly identifies the items which are being filed serves as *prima facie* evidence of receipt in the Office of all items listed thereon on the date stamped thereon by the Office. See MPEP 503.

In view thereof, **THE HOLDING OF ABANDONMENT IS WITHDRAWN.**

Given the basis for granting this petition, no petition fee was required and none has been charged.

Receipt of the $790 RCE fee on January 18, 2005 is acknowledged. However, as the fee for the one month extension of time was never charged, the $120 fee has now been charged to Deposit Account No. 12-1095.

The matter is being forwarded to Group Art Unit 3738 for consideration of the RCE filed January 18, 2005 (copy supplied on petition filed September 16, 2005).

Telephone inquiries regarding this decision should be directed to the undersigned at (571)272-3207.

Cliff Congo

Cliff Congo
Petitions Attorney
Office of Petitions

UNITED STATES PATENT AND TRADEMARK OFFICE

Commissioner for Patents
United States Patent and Trademark Office
P.O. Box 1450
Alexandria, VA 22313-1450
www.uspto.gov

BRIAN R. RAYVE
161 MAPLE DRIVE
PARK CITY UT 84098

COPY MAILED

JAN 3 1 2007

OFFICE OF PETITIONS

ON PETITION

In re Application of	:	
Rodriguez, Deborah T.	:	
Application No. 10/672,338	:	
Filed: September 25, 2003	:	
Attorney Docket No. 026-1-001	:	

This is a decision on the petition under 37 C.F.R. § 1.137(b), filed January 3, 2007, to revive the above-identified application.

The petition is **GRANTED.**

The petition satisfies the conditions for revival pursuant to the provisions of 37 CFR 1.137(b) in that (1) the reply in the form of a previously submitted Election; (2) the petition fee; and (3) the required statement of unintentional delay have been received. Accordingly, the response has been accepted as having been unintentionally delayed.

This matter is being referred to Technology Center 3700 for further examination on the merits.

Telephone inquiries regarding this decision should be directed to the undersigned at (571) 272-3206.

Liana Walsh
Petitions Examiner
Office of Petitions

UNITED STATES PATENT AND TRADEMARK OFFICE

Commissioner for Patents
United States Patent and Trademark Office
P.O. Box 1450
Alexandria, VA 22313-1450
www.uspto.gov

INTERNATIONAL FLAVORS & FRAGRANCES INC.
521 WEST 57TH ST
NEW YORK NY 10019

COPY MAILED

NOV 19 2007

OFFICE OF PETITIONS

In re Application of	:	
Narula et al.	:	
Application No. 10/672,339	:	ON PETITION
Filed: September 26, 2003	:	
Attorney Docket No. IFF-18-2	:	

This is a decision on the petition under 37 C.F.R. § 1.137(b), filed October 25, 2007, to revive the above-identified application.

The petition is **GRANTED.**

The petition satisfies the conditions for revival pursuant to the provisions of 37 CFR 1.137(b) in that (1) the reply in the form of the Issue Fee Transmittal with payment of the issue and publication fees; (2) the petition fee; and (3) the required statement of unintentional delay have been received. Accordingly, the response has been accepted as having been unintentionally delayed.

This matter is being referred to the Publishing Division for processing into a patent.

Telephone inquiries regarding this decision should be directed to the undersigned at (571) 272-3206.

Liana Walsh
Petitions Examiner
Office of Petitions

UNITED STATES PATENT AND TRADEMARK OFFICE

COMMISSIONER FOR PATENTS
UNITED STATES PATENT AND TRADEMARK OFFICE
P.O. BOX 1450
ALEXANDRIA, VA 22313-1450
www.uspto.gov

LEE & HAYES, PLLC
421 W. RIVERSIDE AVE, STE 500
SPOKANE WA 99201

MAIL

AUG 1 8 2005

DIRECTOR OFFICE
TECHNOLOGY CENTER 2600

In re Application of :
Jeffrey B. Smith, et al. :
Application No. 10/672,348 :
Filed: September 26, 2003 :
For: COLLECT CALLBACK :

DECISION ON PETITION
TO MAKE SPECIAL

This is a decision on the petition filed July 25, 2005, under 37 CFR §1.102(d) to make the application special and treated as pursuant to MPEP §708.02, section II (Infringement).

A grantable petition under 37 CFR §1.102(d) and MPEP §708.02, section II (Infringement), must be accompanied by the required fee and a statement alleging:

(1) that there is an infringing device or product actually on the market or method in use;
(2) that a rigid comparison of the alleged infringing device, product, or method with the claims of the application has been made, and that, in his or her opinion, some of the claims are unquestionably infringed; and
(3) that he or she has made or caused to be made a careful and thorough search of the prior art or has a good knowledge of the pertinent prior art. Further, Applicant must provide a copy of each of the references deemed most closely related to the subject matter encompassed by the claims if the references are not already of record.

The petitioner meets all the above-listed requirements. Accordingly, the petition is **GRANTED**.

The application will retain its special status throughout its entire prosecution, including any appeal to the Board of Patent Appeals and Interferences, subject only to diligent prosecution by the applicant.

The application is being forwarded to the examiner for expedited prosecution.

Krista Zele
Special Program Examiner
Technology Center 2600
Communications

UNITED STATES PATENT AND TRADEMARK OFFICE

Commissioner for Patents
United States Patent and Trademark Office
P.O. Box 1450
Alexandria, VA 22313-1450
www.uspto.gov

Paper No.

MERCHANT & GOULD PC
P.O. BOX 2903
MINNEAPOLIS, MN 55402-0903

COPY MAILED

JUL 26 2004

OFFICE OF PETITIONS

In re Application of Jakob Heier, Cecile Verger, Antonius Ketelaars and Georges Hadziioannou Application No. 10/672,349 Filed: September 25, 2003 Attorney Docket No. 9424.218US01 Title: FOIL PROVIDED WITH RECESSES AND ASSEMBLY OF SUCH A FOIL AND A LIQUID	DECISION ACCORDING STATUS UNDER 37 CFR 1.47(a)

This is a decision on the "PETITION UNDER 37 C.F.R. § 1.47(a)," filed June 14, 2004.

The petition is **GRANTED**.

The above-identified application was filed on September 25, 2003, with an unexecuted declaration. Accordingly, on December 19, 2003, a "Notice to File Missing Parts of Nonprovisional Application" was mailed, requiring an executed oath or declaration, and a surcharge for its late filing (It appears that another copy of this Notice was mailed on December 18, 2003).

In response, rule 47 applicants filed the instant petition (and fee); the late surcharge; and a declaration executed by joint inventors Heier, Verger and Ketelaars on behalf of themselves and on behalf of non-signing joint inventor Hadziioannou. The response was made timely by an accompanying petition (and fee) for extension for response within the fourth month. Rule 47 applicants maintain that status under 37 CFR 1.47 is proper because joint inventor Hadziioannou refuses to join in the application for patent.

By declaration of patent counsel Ronald Ekkel, petitioner has shown that the application papers were presented to inventor Hadziioannou, but he refused to sign. The petition includes a copy of a letter by inventor Hadziioannou, reflecting his refusal to sign. The petition includes a statement of the last known address of the non-signing inventor.

The declaration filed June 14, 2004, and the petition have been reviewed and found in compliance with 37 CFR 1.47(a).

This application is hereby accorded Rule 1.47(a) status.

As provided in new Rule 1.47(c), this Office will forward notice of this application's filing to the non-signing inventor at the address given in the petition. Notice of the filing of this application will also be published in the Official Gazette.

The application will be examined in Technology Center 1775 in due course.

Telephone inquiries regarding this decision should be directed to the undersigned at (703) 305-0309.

Nancy Johnson
Senior Petitions Attorney
Office of Petitions

UNITED STATES PATENT AND TRADEMARK OFFICE

Commissioner for Patents
United States Patent and Trademark Office
P.O. Box 1450
Alexandria, VA 22313-1450
www.uspto.gov

GEORGES HADZIIOANNOU
7, RUE DEBUSSY
F-87450 MUNDOLSHEIM
FRANCE

COPY MAILED

JUL 26 2004

OFFICE OF PETITIONS

In re Application of :
Jakob Heier, Cecile Verger, :
Antonius Ketelaars and : LETTER
Georges Hadziioannou :
Application No. 10/672,349 :
Filed: September 25, 2003 :
Attorney Docket No. 9424.218US01 :
Title: FOIL PROVIDED WITH RECESSES :
AND ASSEMBLY OF SUCH A FOIL AND A :
LIQUID :

Dear Mr. Hadziioannou:

You are named as a joint inventor in the above-identified United States patent application filed under the provisions of 35 U.S.C. 116 (United States Code) and 37 CFR 1.47(a), Rules of Practice in Patent Cases. Should a patent be granted on the application you will be designated therein as a joint inventor.

As a named inventor you are entitled to inspect any paper in the file wrapper of the application, order copies of all or any part thereof (at a prepaid cost per 37 CFR 1.19) or make your position of record in the application. Alternatively, you may arrange to do any of the preceding through a registered patent attorney or agent presenting written authorization from you. If you care to join the application, counsel of record (see below) would presumably assist you. Joining in the application would entail the filing of an appropriate oath or declaration by you pursuant to 37 CFR 1.63. However, no action on your part is required for this patent to issue with you as a named inventor.

Telephone inquiries regarding this communication should be directed to Petitions Attorney Nancy Johnson at (703) 305-0309. Requests for information regarding your application should be directed to the File Information Unit at (703) 308-2733. Information regarding how to pay for and order a copy of the application, or a specific paper in the application, should be directed to the Certification Division at (703) 308-9726 or 1-800-972-6382 (outside the Washington D.C. area).

Nancy Johnson

Nancy Johnson
Senior Petitions Attorney
Office of Petitions

MERCHANT & GOULD PC
P.O. BOX 2903
MINNEAPOLIS, MN 55402-0903

UNITED STATES PATENT AND TRADEMARK OFFICE

Commissioner for Patents
United States Patent and Trademark Office
P.O. Box 1450
Alexandria, VA 22313-1450
www.uspto.gov

WAGNER MURABITO & HAO LLP
TWO NORTH MARKET STREET, THIRD FLOOR
SAN JOSE, CA 95113

COPY MAILED

SEP 23 2005

OFFICE OF PETITIONS

In re Application of	:	
Randall Dale Ristau et al	:	
Application No. 10/672,354	:	DECISION ON PETITION
Filed: September 25, 2003	:	UNDER 37 CFR 1.137(b)
Attorney Docket No. TRMB 1398	:	

This is a decision on the petition, filed August 19, 2005, which is being treated as a petition under 37 CFR 1.137(b) to revive the instant nonprovisional application for failure to timely notify the U.S. Patent and Trademark (USPTO) of the filing of an application in a foreign country, or under a multinational treaty that requires publication of applications eighteen months after filing. See 37 CFR 1.137(f).

The petition is **GRANTED**.

Petitioner states that the instant nonprovisional application is the subject of an application filed in an eighteen months publication country on September 23, 2004. However, the USPTO was unintentionally not notified of this filing within 45 days subsequent to the filing of the subject application in an eighteen months publication country.

In view of the above, this application became abandoned pursuant to 35 U.S.C. § 122(b)(2)(B)(iii) and 37 CFR 1.213(c) for failure to timely notify the Office of the filing of an application in a foreign country, or under a multilateral international agreement, that requires publication of applications 18 months after filing.

A petition to revive an application abandoned pursuant to 35 U.S.C. 122(b)(2)(B)(iii) for failure to notify the USPTO of a foreign filing must be accompanied by:

(1) the required reply which is met by the notification of such filing in a foreign country or under a multinational treaty;

(2) the petition fee as set forth in 37 CFR 1.17(m); and

(3) a statement that the entire delay in filing the required reply from the due date of the reply until the filing of a grantable petition was unintentional.

The instant petition has been found to be in compliance with 37 CFR 1.137(b). Accordingly, the failure to timely notify the USPTO of a foreign or international filing within 45 days after the date of filing of

such foreign or international application as provided by 35 U.S.C. § 122(b)(2)(B)(iii) and 37 CFR 1.213(c) is accepted as having been unintentionally delayed.

The previous Request and Certification under 35 U.S.C. § 122 (b) (2) (B) (i) has been rescinded. A Notice Regarding Rescission of Nonpublication Request which sets forth the projected publication date of January 5, 2006 accompanies this decision on petition.

Any inquiries concerning this decision may be directed to Irvin Dingle at (571) 272-3210.

This matter is being referred to Technology Center AU 2857 for examination in due course.

Irvin Dingle
Petitions Examiner
Office of Petitions

Attachment: Notice Regarding Rescission of Nonpublication Request

UNITED STATES PATENT AND TRADEMARK OFFICE

OFFICE of Data Management

TRIMBLE NAVIGATION LIMITED C/O WAGNER BLECHER
123 WESTRIDGE DRIVE
WATSONVILLE CA 95076

In re Application of	:	
RISTAU, RANDALL DALE	:	
Application No. 10/672354	:	**DECISION ON PETITION**
Filed: September 25, 2003	:	
Attorney Docket No. **TRMB-1398**	:	

This is a decision on the Petition To Withdraw Holding Of Abandonment, received in the United States Patent & Trademark (USPTO) via facsimile transmission on May 4, 2006.

The petition is **DISMISSED**.

The above-identified application was held abandoned for applicant's failure to timely pay the issue fee, as required in the Notice of Allowance and Fee(s) Due mailed November 10, 2005. The Notice of Abandonment, mailed on March 28, 2006 indicates, "The submitted fee of $1400 is insufficient. A balance of $300 is due".

The Office acknowledges receipt of Part B – Fee(s) Transmittal via facsimile transmission on February 13, 2006 authorizing that the Publication Fee be charged to Deposit Account No. 23-0085. On February 16, 2006 when an attempt was made by the Office of Finance to charge the fees, there were insufficient funds in the Deposit Account to charge the required fee.

37 CFR 1.25 (a) and (b), which states in part:

> 1.25(a) ...An amount sufficient to cover all fee, services, copies, etc., requested must always be on deposit. Charges to accounts with insufficient funds will not be accepted."
>
> 1.25 (b) ...An authorization to charge a fee to a deposit account will not be considered payment of the fee on the date the authorization to charge the fee is effective as to the particular fee to be charged unless sufficient funds are present in the account to cover the fee.

In light of the non-compliance with 37 CFR 1.25, the holding of abandonment cannot be withdrawn.

Applicant may seek relief by filing a petition for Revival of Abandoned Application under CFR § 1.137 (a) or (b). (Forms are available at USPTO website http://www.uspto.gov)

- Under 37 CFR 1.137(a), a petition for the revival of an ***unavoidable*** abandoned application
- Under 37 CFR 1.137(b), a petition for the revival of an ***unintentionally*** abandoned application

Further inquires with respect to filing a petition under 37 CFR § 1.137 may be directed to the Office of Petitions at 571-272-3282 or addressed as follows:

By mail: Mail Stop Petitions
Commissioner for Patents
Office of Petitions
P O Box 1450
Alexandria, VA 22313-1450

Telephone inquires concerning this decision matter may be directed to the undersigned at (703) 308-9250 Ext. 164.

Kendrick Spruill
Application Assistance Unit
Office of Data Management

UNITED STATES PATENT AND TRADEMARK OFFICE

Commissioner for Patents
United States Patent and Trademark Office
P.O. Box 1450
Alexandria, VA 22313-1450
www.uspto.gov

TRIMBLE NAVIGATION LIMITED C/O WAGNER BLECHER
123 WESTRIDGE DRIVE
WATSONVILLE CA 95076

COPY MAILED

AUG 17 2009

OFFICE OF PETITIONS

In re Application of
Ristau et al.
Application No. 10/672,354
Filed: September 25, 2003
Attorney Docket No. TRMB-1398

DECISION ON PETITION

This is a decision on the petition under the unintentional provisions of 37 CFR 1.137(b), filed June 2, 2009, to revive the above-identified application.

The petition is **GRANTED**.

This application became abandoned for failure to timely submit the publication fee, as required by the Notice of Allowance and Fee (s) Due, which was mailed November 10, 2005. The Notice of Allowance and Fee (s) Due and the Notice of Allowability set a three (3) month statutory period for reply. Extensions of time were not available under the provisions of 37 CFR 1.136(a). Accordingly, this application became abandoned on February 11, 2006. A Notice of Abandonment was mailed on March 28, 2006. A petition filed under 37 CFR 1.181 on May 4, 2006 was dismissed on April 1, 2009.

The petition satisfies the requirements of 37 CFR 1.137(b) in that petitioner has supplied (1) the reply in the form of payment of the publication fees of $300, (2) the petition fee of $1620; and (3) a proper statement of unintentional delay.

Telephone inquiries concerning this decision should be directed to the undersigned at (571) 272-3215.

This application is being referred to the Office of Data Management for further processing.

Charlema Grant
Petitions Attorney
Office of Petitions

UNITED STATES PATENT AND TRADEMARK OFFICE

UNITED STATES DEPARTMENT OF COMMERCE
United States Patent and Trademark Office
Address: COMMISSIONER FOR PATENTS
P.O. Box 1450
Alexandria, Virginia 22313-1450
www.uspto.gov

TRIMBLE NAVIGATION LIMITED C/O WAGNER BLECHER
123 WESTRIDGE DRIVE
WATSONVILLE, CA 95076

Mail Date: 04/21/2010

Applicant	: Randall Dale Ristau	: DECISION ON REQUEST FOR
Patent Number	: 7596465	: RECALCULATION of PATENT
Issue Date	: 09/29/2009	: TERM ADJUSTMENT IN VIEW
Appliction No	: 10/672,354	: OF WYETH AND NOTICE OF INTENT TO
Filed	: 09/25/2003	: ISSUE CERTIFICATE OF CORRECTION
		:

The Request for Recalculation is **GRANTED** to the extent indicated.

The patent term adjustment has been determined to be **1192** days. The USPTO will *sua sponte* issue a certificate of correction reflecting the amount of PTA days determined by the recalculation.

Prior to the issuance of the certificate of correction, the USPTO will afford patentee an opportunity to be heard and request reconsideration. Accordingly, patentee has **one month or thirty (30) days**, whichever is longer, to file a request for reconsideration of this patent term adjustment calculation. See 35 U.S.C. 154(b)(3)(B)(ii) and 37 CFR 1.322(a)(4). No extensions of time will be granted under 37 CFR 1.136.

Patentee should use document code PET.OP if electronically filing a request for reconsideration of this patent term adjustment calculation. The patentee must also include the information required by 37 CFR 1.705(b)(2) and the fee required by 37 CFR 1.18(e). If patentee does not file a timely request for reconsideration of this patent term adjustment calculation including the information required by 37 CFR 1.705(b)(2) and the fee required by 37 CFR 1.18(e), the USPTO will issue a certificate of correction reflecting the PTA determination noted above.

Patentee should be aware that in order to preserve the right to review in the United States District Court for the District of Columbia of the USPTO patent term adjustment determination, patentee must ensure that he or she also take the steps required under 35 U.S.C. 154(b)(4)(A) in a timely manner. Nothing in the request for recalculation should be construed as providing an alternative time frame for commencing a civil action under 35 U.S.C. 154(b)(4)(A).

Any questions concerning this decision should be directed to the Office of Patent Legal Administration at 571-272-7702.

UNITED STATES PATENT AND TRADEMARK OFFICE

Commissioner for Patents
United States Patent and Trademark Office
P.O. Box 1450
Alexandria, VA 22313-1450
www.uspto.gov

R. REAMS GOODLOE, JR. & R. REAMS
GOODLOE, P.S.
24722 104TH. AVENUE S.E.
SUITE 102
KENT, WA 98030-5322

COPY MAILED

MAR 3 1 2005

OFFICE OF PETITIONS

In re Application of	:	
Shawn P. Lawlor, et al	:	
Application No. 10/672,358	:	ON PETITION
Filed: September 25, 2003	:	
Attorney Docket No. RP1-2985-U		

This is a decision on the petition, filed March 30, 2005, under 37 CFR 1.313(c)(3) to withdraw the above-identified application from issue after payment of the issue fee.

The petition is **GRANTED**.

The above-identified application is withdrawn from issue for express abandonment. See 37 CFR 1.313(c)(3).

The application is hereby withdrawn from issue, and the abandonment is hereby recognized.

Telephone inquiries should be directed to Irvin Dingle at (571) 272-3210.

Irvin Dingle
Petitions Examiner
Office of Petitions
Office of the Deputy Commissioner
for Patent Examination Policy

UNITED STATES PATENT AND TRADEMARK OFFICE

Commissioner for Patents
United States Patent and Trademark Office
P.O. Box 1450
Alexandria, VA 22313-1450
www.uspto.gov

HARRIS ZIMMERMAN
LAW OFFICES OF HARRIS ZIMMERMAN
1330 BROADWAY, SUITE 710
OAKLAND, CA 94612-2506

COPY MAILED

AUG 3 1 2009

OFFICE OF PETITIONS

In re Application of :
Denny Jaeger :
Application No. 10/672,362 :
Filed: September 26, 2003 :
Attorney Docket No. 4332 :

ON PETITION

This is a decision on the petition under the unintentional provisions of 37 CFR 1.137(b), filed July 8, 2009, to revive the above-identified application.

There is no indication that the person signing the instant petition was ever given a power of attorney or authorization of agent to prosecute the above-identified application. In accordance with 37 CFR 1.34(a), the signature appearing on the petition shall constitute a representation to the United States Patent and Trademark Office that he/she is authorized to represent the particular party in whose behalf he/she acts. However, if petitioner desires to receive future correspondence regarding this application, the appropriate power of attorney or authorization of agent must be submitted. A courtesy copy of this decision is being mailed to petitioner. Nevertheless, all future correspondence regarding this application file will be directed solely to the address of record until otherwise instructed.

It is not apparent whether the statement of unintentional delay was signed by a person who would have been in a position of knowing that the entire delay in filing the required reply from the due date for the reply until the filing of a grantable petition pursuant to 37 CFR 1.137(b) was unintentional. Nevertheless, in accordance with 37 CFR 10.18, the statement is accepted as constituting a certification of unintentional delay. However, in the event that petitioner has no knowledge that the delay was unintentional, petitioner must make such an inquiry to ascertain that, in fact, the delay was unintentional. If petitioner discovers that the delay was intentional, petitioner must so notify the Office.

This application became abandoned as a result of petitioner's failure to file an appeal brief (and fee required by 37 CFR 41.20(b)(2)) within the time period provided in 37 CFR 41.37(a)(1). As an appeal brief (and appeal brief fee) was not filed within two (2) months of the Notice of Appeal filed October 17, 2007, and a three month extension of time under the provisions of 37 CFR 1.136(a) was obtained, the appeal was dismissed and the proceedings as to the rejected claims were terminated. See 37 CFR 1.197(b). As no claim was allowed, the application became abandoned on December 18, 2007. See MPEP 1215.04.

The petition satisfies the requirements of 37 CFR 1.137(b) in that petitioner has supplied (1) the reply in the form of a Request for Continued Examination (RCE) and fee of $405, and the submission required by 37 CFR 1.114; (2) the petition fee of $810; and (3) a proper statement of unintentional delay.

In view of the above, the petition is **GRANTED**.

Since the $405 RCE fee submitted with the petition on July 8, 2009 was previously paid on May 19, 2009, the duplicate fee is unnecessary and will be credited to petitioner's deposit account.

Telephone inquiries concerning this decision should be directed to the undersigned at (571) 272-1642. All other inquiries concerning the examination or status of this application should be directed to the Technology Center.

This application is being referred to Technology Center AU 2175 for processing of the RCE filed May 19, 2008 and for appropriate action by the Examiner in the normal course of business on the amendment submitted in accordance with 37 CFR 1.114.

April M. Wise
Petitions Examiner
Office of Petitions

UNITED STATES PATENT AND TRADEMARK OFFICE

Commissioner for Patents
United States Patent and Trademark Office
P.O. Box 1450
Alexandria, VA 22313-1450
www.uspto.gov

BLAKELY, SOKOLOFF, TAYLOR & ZAFMAN LLP
12400 Wilshire Boulevard, Seventh Floor
Los Angeles CA 90025-1026

COPY MAILED
OCT 24 2006
OFFICE OF PETITIONS

In re Application of	:	
SAVARESE, et al.	:	
Application No. 10/672,365	:	DECISION ON PETITION
Filed: September 26, 2003	:	TO MAKE SPECIAL UNDER
Attorney Docket No. 06196.P002	:	37 CFR 1.102(c)(1)
	:	

This is a decision on the petition under 37 CFR 1.102(c)(1), filed September 6, 2006, to make the above-identified application special based on applicant's age as set forth in M.P.E.P. § 708.02, Section IV.

The petition is **GRANTED**.

A grantable petition to make an application special under 37 CFR 1.102(c)(1) and MPEP § 708.02, Section IV: Applicant's Age, must be accompanied by evidence showing that at least one of the applicants is 65 years of age, or more, such as a birth certificate or a statement by applicant. No fee is required.

The instant petition includes affidavits from Noel H.C. Marshall and Forrest F. Fulton attesting to their age. Accordingly, the above-identified application has been accorded "special" status.

Telephone inquiries concerning this decision should be directed to Monica A. Graves at 571-272-7253.

All other inquiries concerning either the examination or status of the application should be directed to the Technology Center.

The application is being forwarded to the Technology Center Art Unit 3714 for action on the merits commensurate with this decision.

David Bucci
Petitions Examiner
Office of Petitions

UNITED STATES PATENT AND TRADEMARK OFFICE

Commissioner for Patents
United States Patent and Trademark Office
P.O. Box 1450
Alexandria, VA 22313-1450
www.uspto.gov

JENKINS, WILSON, TAYLOR & HUNT, P. A.
3100 TOWER BLVD., Suite 1200
DURHAM NC 27707

4/2/08

In re Application of:
Dahners, Laurence E.
Serial No.: 10/672,370
Filed: Sep. 25, 2003
Docket: 421/75/2
Title: MODIFICATION OF PERCUTANEOUS INTRAFOCAL PLATE SYSTEM

Decision on Petition

This is a decision on the petition filed Mar. 18, 2008 to withdraw holding of abandonment entered Feb. 13, 2008. This petition is being considered pursuant to 37 CFR 1.181. No fee is required.

The petition is **GRANTED**.

The application was held abandoned for failure to timely respond to the Office Action mailed on Jul. 13, 2007. Notice of abandonment was mailed on Feb. 13, 2008.

Petitioner asserts that a response to the Jul. 13, 2007 Office action was timely filed on Jan. 14, 2008. In response, the petitioner has enclosed a copy of the PTO stamped receipt bearing the date of Jan. 14, 2008 and copy of the originally filed communication.

37 CFR §1.8(b) states:

> In the event that correspondence is considered timely filed by being mailed or transmitted in accordance with paragraph (a) of this section, but not received in the U.S. Patent and Trademark Office after a reasonable amount of time has elapsed from the time of mailing or transmitting of the correspondence, or after the application is held to be abandoned, or after the proceeding is dismissed, terminated, or decided with prejudice, the correspondence will be considered timely if the party who forwarded such correspondence:
> (1) Informs the Office of the previous mailing or transmission of the correspondence promptly after becoming aware that the Office has no evidence of receipt of the correspondence;
> (2) Supplies an additional copy of the previously mailed or transmitted correspondence and certificate; and
> (3) Includes a statement which attests on a personal knowledge basis or to the satisfaction of the Director to the previous timely mailing or transmission. If the correspondence was sent by facsimile transmission, a copy of the sending unit's report confirming transmission may be used to support this statement.

In light of the evidence submitted and satisfied the provisions of 37 CFR § 1.8(b), there is no abandonment in fact. As such, the holding of abandonment is in error and is hereby vacated. Any inconvenience to the applicant is regrettable.

A three-month of extension fee and a terminal disclaimer fee are charged to the Deposit Account 50-0426.

This application is being forwarded to the Supervisory Patent Examiner in Art Unit 3733 for appropriate action. Any inquiry regarding this decision should be directed to Henry C. Yuen, Special Programs Examiner at (571) 272-4856.

PETITION GRANTED

Frederick R. Schmidt, Director
Technology Center 3700

UNITED STATES PATENT AND TRADEMARK OFFICE

Commissioner for Patents
United States Patent and Trademark Office
P.O. Box 1450
Alexandria, VA 22313-1450
www.uspto.gov

JENKINS, WILSON, TAYLOR & HUNT, P. A.
Suite 1200 UNIVERSITY TOWER
3100 TOWER BLVD.,
DURHAM NC 27707

MAILED

MAY 03 2010

OFFICE OF PETITIONS

In re Application of :
Laurence E. Dahners :
Application No. 10/672,370 : NOTICE
Filed: September 25, 2003 :
Attorney Docket No. 421/75/2 :

This is a notice regarding your request for acceptance of a fee deficiency submission under 37 CFR 1.28.

The Office no longer investigates or rejects original or reissue applications under 37 CFR 1.56. **1098 Off. Gaz. Pat. Office 502 (January 3, 1989)**. Therefore, nothing in this Notice is intended to imply that an investigation was done.

Your fee deficiency submission under 37 CFR 1.28 is hereby **ACCEPTED**.

This application is no longer entitled to small entity status. Accordingly, all future fees paid in this application must be paid at the large entity rate.

Inquiries related to this communication should be directed to the undersigned at (571) 272-3213.

Cheryl Gibson-Baylor

Cheryl Gibson-Baylor
Petitions Examiner
Office of Petitions

UNITED STATES PATENT AND TRADEMARK OFFICE

COMMISSIONER FOR PATENTS
UNITED STATES PATENT AND TRADEMARK OFFICE
P.O. BOX 1450
ALEXANDRIA, VA 22313-1450
WWW.USPTO.GOV

Paper No. None

SCULLY SCOTT MURPHY & PRESSER, PC
400 GARDEN CITY PLAZA
SUITE 300
GARDEN CITY NY 11530

COPY MAILED
JAN 30 2007
OFFICE OF PETITIONS

In re Application of	:	
Peter A. Franaszek et al.	:	
Application No. 10/672,376	:	
Filed: September 26, 2003	:	DECISION ON PETITION
Attorney Docket No.	:	UNDER 37 C.F.R. §1.181(A)
YOR920010009US3 (13323ZY)	:	
Title: VERY HIGH SPEED PAGE	:	
OPERATIONS IN INDIRECT ACCESSED	:	
MEMORY SYSTEMS	:	

This is a decision on the petition under 37 C.F.R. §1.181(a) to withdraw the holding of abandonment, filed on June 13, 2006.

The Office regrets the delay in issuing this decision.

The above-identified application became abandoned for failure to reply in a timely manner to the non-final Office action, mailed March 10, 2005, which set a shortened statutory period for reply of three months. No response was received, and no extensions of time under the provisions of 37 C.F.R. §1.136(a) were requested. Accordingly, the above-identified application became abandoned on June 11, 2005. A notice of abandonment was mailed on March 13, 2006.

With the present petition, Petitioner's representative has asserted that a response was timely filed on June 9, 2005, however Petitioner's representative placed the wrong serial number on this submission - the cover page and the transmittal sheet both bear the serial number 09/672,376. Petitioner's

representative is reminded that errors such as occurred can result in loss of rights and care must be taken to avoid such.

The electronic file has been reviewed, and a copy of this response has been located in the same.

Considering the facts and circumstances of the delay at issue, as set forth on petition, it is concluded that Petitioner's representative has met his burden of establishing that a response was timely submitted.

Accordingly, the petition under 37 C.F.R. §1.181(a) is **GRANTED**. The holding of abandonment is **WITHDRAWN**.

The Technology Center will be notified of this decision. The Technology Center's support staff will notify the Examiner of this decision, so that the amendment of June 13, 2005 can be processed.

Telephone inquiries regarding *this decision* should be directed to the undersigned at (571) 272-3225. All other inquiries concerning examination procedures or status of the application should be directed to the Technology Center.

Paul Shanoski
Senior Attorney
Office of Petitions
United States Patent and Trademark Office

UNITED STATES PATENT AND TRADEMARK OFFICE

Commissioner for Patents
United States Patent and Trademark Office
P.O. Box 1450
Alexandria, VA 22313-1450
www.uspto.gov
DIW OCI-OS

BERRY & ASSOCIATES P.C.
9255 SUNSET BOULEVARD
SUITE 810
LOS ANGELES CA 90069

COPY MAILED

OCT 0 6 2008

OFFICE OF PETITIONS

In re Application of	:	
Cortopassi et al.	:	DECISION ON PETITION
Application Number: 10/672382	:	TO WITHDRAW HOLDING OF
Filing Date: 09/25/2003	:	ABANDONMENT
Attorney Docket Number: PALM-	:	
2936.PSI.CON	:	

This is a decision on the "LETTER REQUESTING WITHDRAWAL OF IMPROPER NOTICE OF ABANDONMENT UNDER MPEP 711.03 AND 37 C.F.R. §1.137," filed on September 16, 2008, which is treated as a petition to withdraw the holding of abandonment in the above-identified application.

The application was held abandoned for failure to timely submit a reply to the final Office action mailed on February 20, 2008, which set a three (3) month shortened statutory period for reply. Notice of Abandonment was mailed on August 26, 2008.

Petitioners assert that a response to the final Office action was in fact timely filed. In support, petitioners have provided a copy of a postcard bearing an Office-date stamp of August 25, 2008, itemizing the filing of, *inter alia*, a petition for extension of time, a Request for Continued Examination (RCE), and a preliminary amendment. A copy of the reply asserted to have been timely filed was also provided with the subject petition.

A review of the Official file reveals that the papers filed on August 25, 2008, are located therein.

The date-stamped on the post card of August 25, 2008, is after the due date for the response. However, under 37 C.F.R. § 1.8(a)(1) correspondence is considered timely if: (1) the correspondence is mailed or transmitted prior to expiration of the set period for response by being properly addressed to the Patent and Trademark Office as set out in 37 C.F.R. § 1.1(a) and deposited with the U.S. Postal Service with sufficient postage as first class mail or transmitted to the Patent and Trademark

Office in accordance with 37 C.F.R. § 1.6(d); and (2) the correspondence includes a certificate for each piece of correspondence stating the date of deposit or transmission. The person signing the certificate should have a reasonable basis to expect that the correspondence would be mailed or transmitted on or before the date indicated.

The RCE Transmittal sheet contains a Certificate of Mailing dated August 20, 2008, signed by petitioner's counsel, Reena Kuyper. The transmittal sheet itemizes the filing of the RCE and the preliminary amendment as the submission under 37 CFR 1.114, and contains a general authorization to charge all fees to counsel's deposit account, in compliance with the requirements of 37 C.F.R. § 1.8(a)(1) as set forth above.

Accordingly the showing of record is that a reply was timely filed. Therefore, there is no abandonment in fact. The holding of abandonment is withdrawn, and the Notice of Abandonment is vacated.

This matter is being referred to Technology Center Art Unit 2624 for further processing.

Telephone inquiries concerning this matter may be directed to the undersigned at (571)272-3231.

DWood

Douglas I. Wood
Senior Petitions Attorney
Office of Petitions